DocuSign Envelope ID: 0374759A-E74D-4A82-BF14-F79C34577DB4

FED.RD. DIV.NO.	FEDERAL AID PROJECT NO.		HIGHWAY NO.
06	STP 2024(163)TP		FM 270,ETC
STATE	DISTRICT	COUNTY	SHEET NO.
TEXAS	HOUSTON	GALVESTON	1
CONTROL	SECTION	JOB	
0912	73	215	

STATE OF TEXAS
DEPARTMENT OF TRANSPORTATION

PLANS OF PROPOSED
STATE HIGHWAY IMPROVEMENT

STATE AND FEDERALLY FUNDED PROJECT

CSJ 0912-73-215

SH 96, FM 270
GALVESTON COUNTY

TOTAL LENGTH OF CSJ 0912-73-215 = 30,804.71 FT = 5.83 MI

LIMITS: ON SH 96 FROM FM 270 TO SH 146
AND
ON FM 270 FROM FM 2094 TO SH 96

TYPE OF WORK: FOR THE CONSTRUCTION OF BICYCLE INFRASTRUCTURE IMPROVEMENTS CONSISTING OF SIDEPATH AND BIKE ACCESSIBLE SHOULDER.

FINAL PLANS

CONTRACTOR : _____

LETTING DATE: _____

DATE WORK BEGAN: _____

DATE WORK COMPLETED: _____

DATE WORK ACCEPTED: _____

SUMMARY OF CHANGE ORDERS:

REGISTERED ACCESSIBILITY SPECIALIST (RAS) INSPECTOR REQUIRED TDLR NO. TABS 2023021421

FM 270: MINOR ARTERIAL
DESIGN SPEED = 60 MPH
AADT= 19,300 (2023), AADT= 23,600 (2043)
SH 96: PRINCIPAL ARTERIAL
DESIGN SPEED = 45-50 MPH
AADT= 26,500 (2023), AADT= 37,300 (2043)
SIDE PATH
DESIGN SPEED = 20 MPH

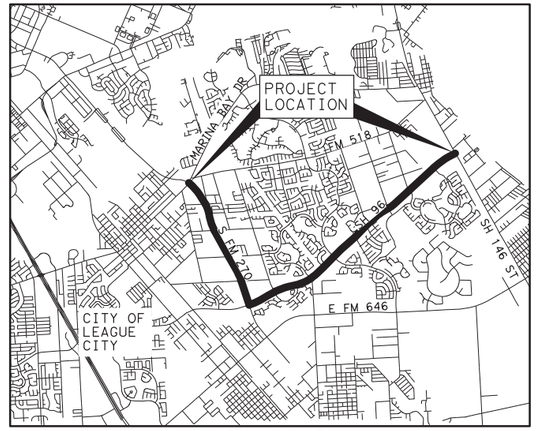

VICINITY MAP
SCALE: NTS

BEGIN PROJECT
FM 270 STA 130+90.36
CSJ 0912-73-215
N = 13,759,983.6242
E = 3,216,338.3686
REFERENCE MARKER 698+1.350
MP 3.473

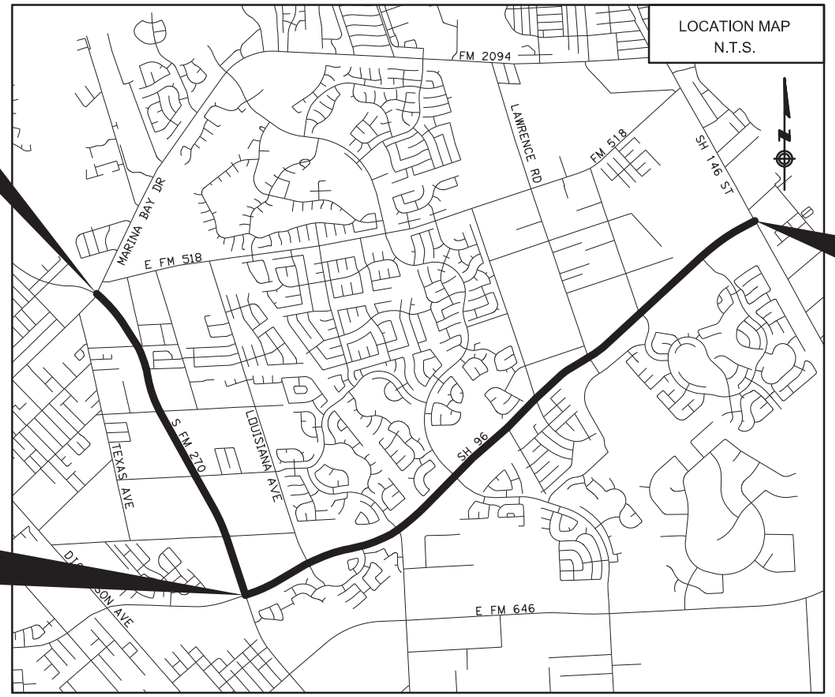

END PROJECT
SH 96 STA 418+78.32
CSJ 0912-73-215
N = 13,762,232.4781
E = 3,236,998.5549
REFERENCE MARKER 704+0.427
MP 6.503

FM 270 STA 237+81.50
=
SH 96 STA 217+64.75
REFERENCE MARKER 700+0.611
MP 2.707

LOCATION MAP
SCALE: NTS

STATE OF TEXAS
JOHANNA TORRES
130063
LICENSED PROFESSIONAL ENGINEER
johannatorres
8/25/2023

NOTE:

SPECIFICATIONS ADOPTED BY THE TEXAS DEPARTMENT OF TRANSPORTATION, NOVEMBER 1, 2014 AND SPECIFICATION ITEMS LISTED AND DATED AS FOLLOWS SHALL GOVERN ON THIS PROJECT: REQUIRED CONTRACT PROVISIONS FOR ALL FEDERAL-AID CONSTRUCTION CONTRACTS (FORM FHWA 1273, October 23, 2023)

WORK WAS COMPLETED ACCORDING TO THE PLANS AND CONTRACT.

_____, P.E.
Signature of Registrant & Date

EXCEPTIONS: NONE

RAILROADS: NONE

EQUATIONS: SUP_96 STA 74+99.51 (BK) = STA 75+00.00 (AH)

Texas Department of Transportation ©2023

SUBMITTED FOR LETTING: 8/30/2023

Xiaofang Huang, P.E.
PROJECT MANAGER

APP DocuSigned by: James Koch 8A2ACFA465C24CC... 9/1/2023, P.E.
GINEER

© 2023 by Texas Department of Transportation; all rights reserved

8/25/2023 12:59:17 PM
$FILE$

PLOTDRIVER: LCBF.pltcfg PENTABLE: LCBF.tbl

DATE: 8/31/2023 1:44:51 PM USER: sss
FILE: c:\bms\pwe101-01\stela.staver-scull\dms22646\LCBF_INDEX.dgn

INDEX OF SHEETS

SHEET NO.	DESCRIPTION
	GENERAL
1	TITLE SHEET
2	INDEX OF SHEETS
3 - 5	PROJECT LAYOUT
6 - 8	FM 270 EXISTING TYPICAL SECTIONS
9 - 13	FM 270 PROPOSED TYPICAL SECTIONS
14	SH 96 EXISTING TYPICAL SECTION
15	SH 96 PROPOSED TYPICAL SECTION
16 , 16A-16L	GENERAL NOTES
17 , 17A-17B	ESTIMATE AND QUANTITY
18	SUMMARY OF REMOVAL QUANTITIES
19	SUMMARY OF BICYCLE FACILITY QUANTITIES
20	SUMMARY OF DRAINAGE QUANTITIES
21	SUMMARY OF TRAFFIC SIGNAL MODIFICATION QUANTITIES
22	SUMMARY OF SIGNING AND PAVEMENT MARKINGS QUANTITIES
23	SUMMARY OF SMALL SIGNS
24	SUMMARY OF SW3P QUANTITIES
	TRAFFIC CONTROL PLAN
25 - 27	TCP TYPICAL SECTIONS AND SEQUENCE OF CONSTRUCTION
28 - 34	TRAFFIC CONTROL PLAN PHASE 1
35 - 40	TRAFFIC CONTROL PLAN PHASE 2
41 - 50	TRAFFIC CONTROL PLAN PHASE 3
51 - 52	TRAFFIC CONTROL PLAN PHASE 4
	TRAFFIC CONTROL PLAN STANDARDS
53 - 64	* BC(1-12)-21
65	*CSMD TC8010-2020 (HOU DIST)
66	*TCP(1-4)-18
67	*TCP(1-3)-18
68	*TCP(2-4)-18
69	*TCP(2-1)-18
70	*TCP(3-3)-14
71	*DS TC8020-04 (HOU DIST)
72 - 73	* WZ(BTS-1 THRU 2)-13
	BICYCLE FACILITY SHEETS
74 - 80	SURVEY CONTROL INDEX SHEET
81 - 85	HORIZONTAL AND VERTICAL CONTROL SHEET
86 - 103	HORIZONTAL ALIGNMENT DATA
104 - 119	REMOVAL LAYOUT
120 - 122	FM 270 PLAN AND PROFILE
123 - 126	FM 270 PLAN AND PLAN
127	FM 270 PLAN AND PROFILE
128 - 148	SH 96 PLAN AND PROFILE
149	FM 270 AT FM 518 INTERSECTION LAYOUT
150	FM 270 AT SH 96 INTERSECTION LAYOUT
151	SH 96 AT TUSCAN LAKES BLVD INTERSECTION LAYOUT
152	SH 96 AT SOUTH SHORE BLVD INTERSECTION LAYOUT
153	SH 96 AT BAY RIDGE DR INTERSECTION LAYOUT
154	SH 96 AT LAWRENCE RD INTERSECTION LAYOUT
155	SH 96 AT MAR BELLA PKWY INTERSECTION LAYOUT
156	SH 96 AT ISLA VISTA DR INTERSECTION LAYOUT
157	SH 96 AT SH 146 INTERSECTION LAYOUT
158	DRIVEWAY SUMMARY
159 - 160	MISCELLANEOUS DETAILS
	BICYCLE FACILITY SHEETS STANDARD
161	*MEDIAN NOSE DETAILS HOU-MEDNS-22 (HOU DIST)
162 - 164	*DRIVEWAY DETAILS DD (HOU DIST)
165	*CC & DID (HOU DIST)
166 - 169	*PEDESTRIAN FACILITIES CURB RAMPS PED-18
170 - 172	*PEDESTRIAN HANDRAIL DETAILS PRD-13
173	*MOW STRIP MS (HOU DIST)
174	* GF(31)-19
175	* GF(31) DAT-19
176	*SGT(15)31-20
177 - 178	*JOINTED REINFORCED CONCRETE PAVEMENT DETAILS JRCP
179 - 180	MISCELLANEOUS CURB AND SIDEWALK DETAILS (MOD)
	DRAINAGE SHEETS
181 - 182	EXTERNAL DRAINAGE AREA MAP
183 - 186	FM 270 DRAINAGE AREA MAP
187	FM 270 & SH 96 DRAINAGE AREA MAP
188 - 196	SH 96 DRAINAGE AREA MAPS
197 - 199	DRAINAGE AREA CALCULATION SHEETS
200 - 202	HYDRAULIC DATA SHEET
203	DRAINAGE PLAN & PLAN
204 - 221	DRAINAGE PLAN & PROFILE
222 - 226	CULVERT LAYOUT
	DRAINAGE STANDARDS
227 - 228	**SAFETY END TREATMENT SETB-CD
229 - 230	**SAFETY END TREATMENT SETB-PD
231	**SAFETY END TREATMENT SETP-PD
232 - 233	**SAFETY END TREATMENT SETP-PD-A
234	**BOX CULVERT SUPPLEMENT BCS
235	**CONCRETE WINGWALLS FW-0
236	**PRECAST JUNCTION BOX PJB
237	**DESIGN DATA FOR PRECAST BASE AND JUNCTION BOX PDD
238	**INLET TYPE A HIL-A (HOU DIST)
239	JUNCTION BOX DETAILS
240 - 241	**MULTIPLE BOX CULVERTS MC-6-16
242	**SCP-3
243	**SCP-4
244	**SCP-5
245	**SCP-8
246	**SCP-MD
247 - 248	**MC-5-23
	UTILITIES
249 - 265	EXISTING UTILITY LAYOUT
	TRAFFIC SIGNALS
266	TRAFFIC SIGNAL GENERAL NOTES
267	FM 270 AT FM 518 SIGNAL LAYOUT
268	FM 270 AT WEBSTER ST SIGNAL LAYOUT
269	FM 270 AT AUSTIN ST SIGNAL LAYOUT
270	FM 270 AT SH 96 EXISTING SIGNAL CONDITION LAYOUT
271 - 272	FM 270 AT SH 96 PROPOSED SIGNAL CONDITION LAYOUT
273	SH 96 AT LOUISIANA AVE EXISTING SIGNAL CONDITION LAYOUT
274 - 275	SH 96 AT LOUISIANA AVE PROPOSED SIGNAL CONDITION LAYOUT
276	SH 96 AT TUSCAN LAKES EXISTING SIGNAL CONDITION LAYOUT
277 - 278	SH 96 AT TUSCAN LAKES PROPOSED SIGNAL CONDITION LAYOUT
279	SH 96 AT SOUTH SHORE EXISTING SIGNAL CONDITION LAYOUT
280 - 281	SH 96 AT SOUTH SHORE PROPOSED SIGNAL CONDITION LAYOUT
282	SH 96 AT BAY RIDGE DR EXISTING SIGNAL CONDITION LAYOUT
283 - 284	SH 96 AT BAY RIDGE DR PROPOSED SIGNAL CONDITION LAYOUT
285	SH 96 AT LAWRENCE RD EXISTING SIGNAL CONDITION LAYOUT
286 - 287	SH 96 AT LAWRENCE RD PROPOSED SIGNAL CONDITION LAYOUT
288	SH 96 AT MAR BELLA PKWY EXISTING SIGNAL CONDITION LAYOUT
289 - 290	SH 96 AT MAR BELLA PKWY PROPOSED SIGNAL CONDITION LAYOUT
291	SH 96 AT ISLA VISTA DR EXISTING SIGNAL CONDITION LAYOUT
292 - 293	SH 96 AT ISLA VISTA DR PROPOSED SIGNAL CONDITION LAYOUT
	TRAFFIC STANDARDS
294	#SIGNAL DETAILS/STANDARDS CONSTRUCTION DETAILS CD/PM(APS)PS (HOU DIST)
295	#ELECTRICAL DETAILS CONDUITS & NOTES ED(1)-14
296	#ELECTRICAL DETAILS CONDUCTORS ED(3)-14
297	#ELECTRICAL DETAILS GROUND BOXES ED(4)-14
298	#ELECTRICAL DETAILS ED(8)-14
299	#ROADSIDE FLASING BEACON ASSEMBLY RFBA-13
	SIGNING AND PAVEMENT MARKINGS
300 - 315	SIGNING AND PAVEMENT MARKING LAYOUT
316	INTERSECTION LAYOUT
	SIGNING AND PAVEMENT MARKINGS STANDARDS
317	##TYPICAL SIGN REQUIREMENTS TSR(3)-13
318	##TYPICAL SIGN REQUIREMENTS TSR(4)-13
319	##TYPICAL STANDARD PAVEMENT MARKINGS PM(1)-22
320	##PM(2)-22
321	##PM(3)-22
322	##CROSSWALK PAVEMENT MARKINGS PM(4)-22A
323	##SMD(GEN)-08
324	##SMD(SLIP-1)-08
325	##SMD(SLIP-2)-08
	ENVIRONMENTAL
326 - 327	EPIC
328	SW3P
329 - 344	SW3P LAYOUT
	ENVIRONMENTAL STANDARDS
345	##EC(1)-16
346	##EC(2)-16
347	##EC(3)-16
348	##EROSION CONTROL LOG ECL-12 (HOU DIST)
349	##FERTILIZER, SEED, SOD, STRAW, COMPOST AND WATER (HOU DIST)

STATE OF TEXAS
JOHANNA TORRES
130063
LICENSED
PROFESSIONAL ENGINEER
8/31/2023

THE STANDARD SHEETS SPECIFICALLY IDENTIFIED WITH A " * " HAVE BEEN SELECTED BY ME AND ARE APPLICABLE TO THIS PROJECT.

STATE OF TEXAS
EMILY F. MORAN
138135
LICENSED
PROFESSIONAL ENGINEER
8/31/2023 1/13/2023

THE STANDARD SHEETS SPECIFICALLY IDENTIFIED WITH A " # " HAVE BEEN SELECTED BY ME AND ARE APPLICABLE TO THIS PROJECT.

STATE OF TEXAS
DAVID CORNYN
138892
LICENSED
PROFESSIONAL ENGINEER
8/31/2023

THE STANDARD SHEETS SPECIFICALLY IDENTIFIED WITH A " ** " HAVE BEEN SELECTED BY ME AND ARE APPLICABLE TO THIS PROJECT.

STATE OF TEXAS
GREGORIO GARCIA
101077
LICENSED
PROFESSIONAL ENGINEER
8/31/2023

THE STANDARD SHEETS SPECIFICALLY IDENTIFIED WITH A " ## " HAVE BEEN SELECTED BY ME AND ARE APPLICABLE TO THIS PROJECT.

Texas Department of Transportation
©2023

JONES|CARTER
Texas Board of Professional Engineers Registration No. F-23290
4350 Lockhill Selma Rd, Suite 100 • San Antonio, Texas 78249 • 210.494.5511

SH 96, FM 270

INDEX OF SHEETS

SHEET 01 OF 01

DRAWN	FED. RD. DIV. NO.	FEDERAL AID PROJECT NO.		HIGHWAY NO.
AA	06			FM 270, ETC
DESIGNED	STATE	DIST.	COUNTY	SHEET NO.
JT	TEXAS	HOUSTON	GALVESTON	2
CHECKED	CONT.	SECT.	JOB	
NG	0912	73	215	
APPROVED				
DD				

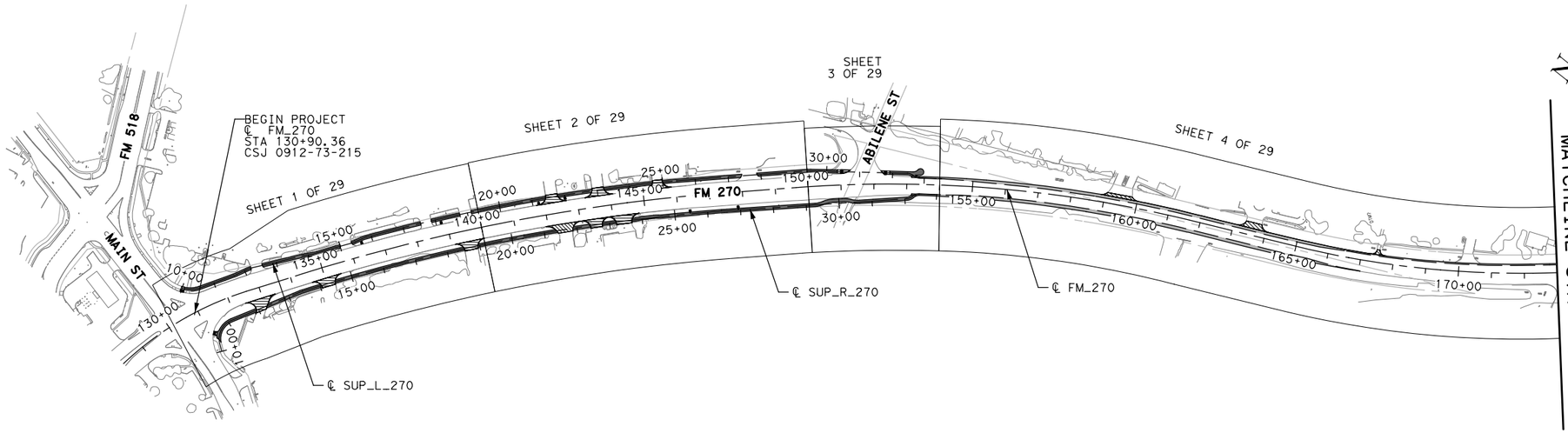

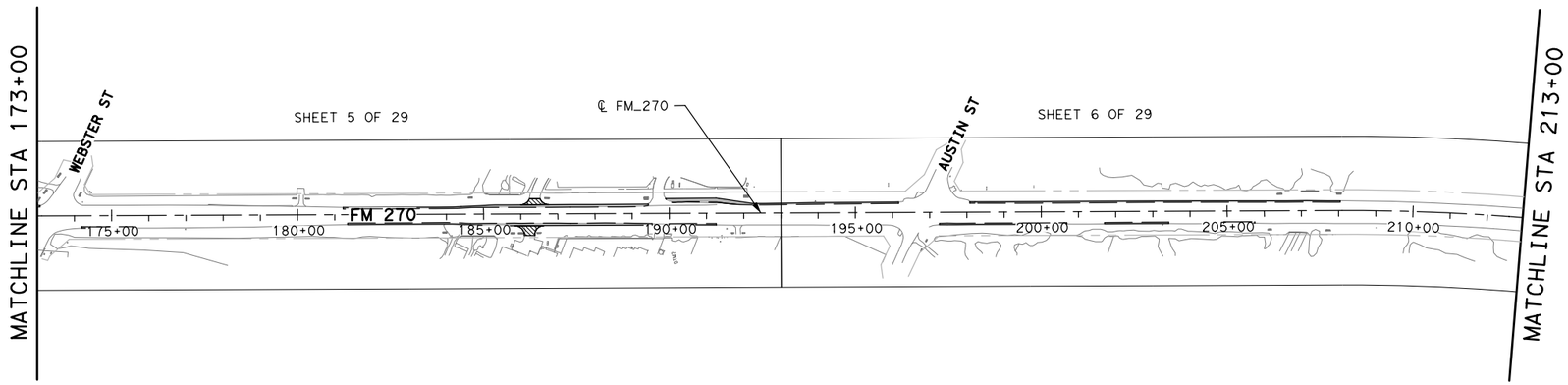

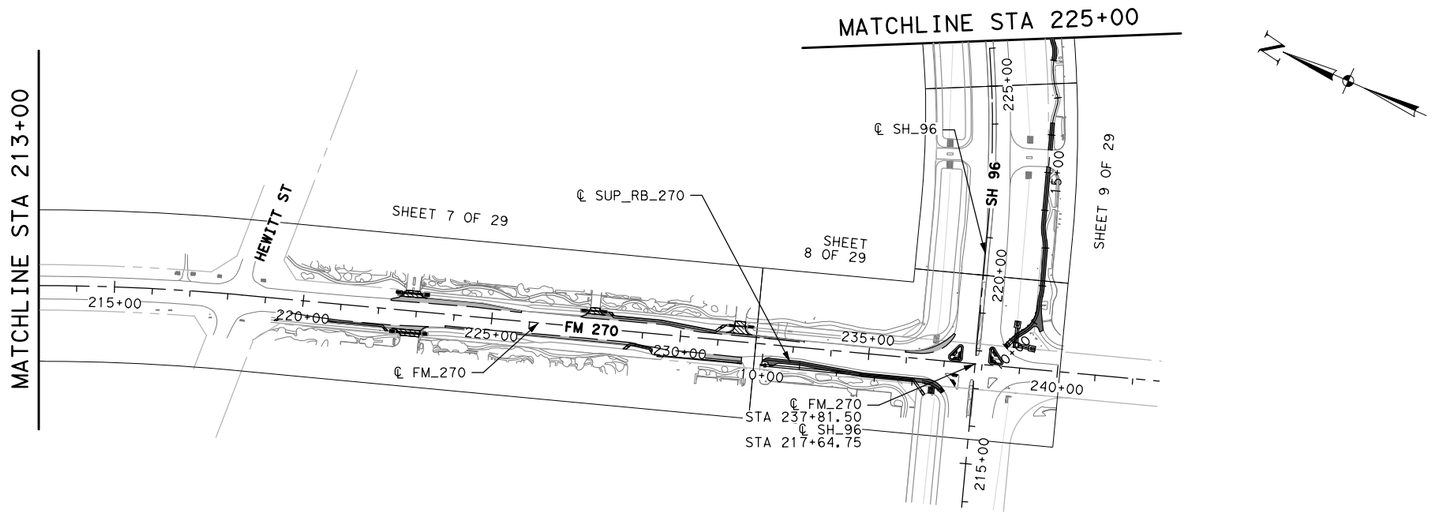

LEGEND:

- EXISTING ROW
- CENTERLINE
- PROPOSED SIDEPATH
- EXISTING SIDEPATH
- PROPOSED SIDEWALK
- PROPOSED WIDENING
- WETLAND
- PROPOSED ASPHALT DRWY
- PROPOSED CONCRETE DRWY

NO.	DATE	REVISION	APPROVED

STATE OF TEXAS
JOHANNA TORRES
130063
LICENSED
PROFESSIONAL ENGINEER
johannatorres
8/1/2023

Texas Department of Transportation
©2023

JONES|CARTER
Texas Board of Professional Engineers Registration No. F-23290
4350 Lockhill Selma Rd, Suite 100• San Antonio, Texas 78249 •210.494.5511

SH 96, FM 270 PROJECT LAYOUT

SHEET **01** OF **03**

DRAWN	FED.RD. DIV.NO.	FEDERAL AID PROJECT NO.		HIGHWAY NO.
AA	06			FM 270, ETC
DESIGNED	STATE	DIST.	COUNTY	SHEET NO.
JT	TEXAS	HOUSTON	GALVESTON	3
CHECKED	CONT.	SECT.	JOB	
NG	0912	73	215	
APPROVED				
DD				

PENTABLE:LCBF.tbl
PLOTDRIVER:LCBF.pltcfg
DATE:8/1/2023 11:51:28 AM USER:sss
FILE:c:\bms\pwe101-01\stella.staver-scull\dms22646\LCBF_PRJLYT01.dgn

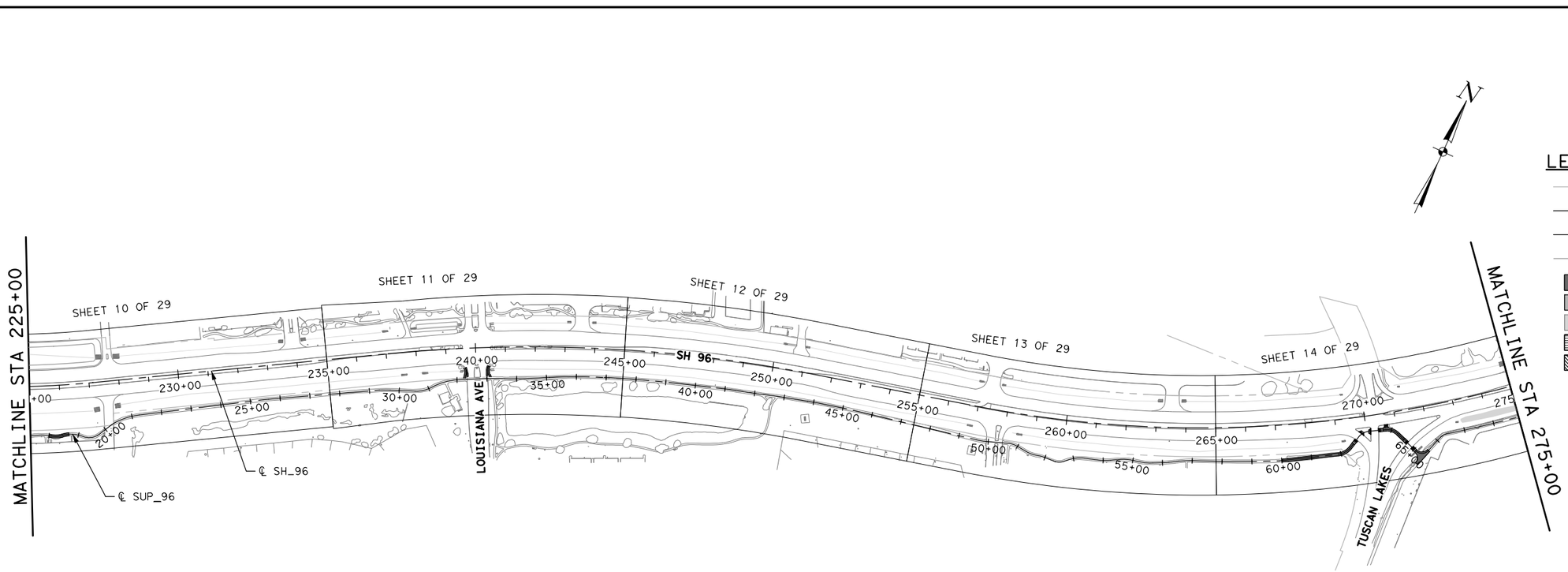

NO.	DATE	REVISION	APPROVED

STATE OF TEXAS
JOHANNA TORRES
130063
LICENSED
PROFESSIONAL ENGINEER
johannatorres
8/1/2023

Texas Department of Transportation
©2023

JONES|CARTER
Texas Board of Professional Engineers Registration No. F-23290
4350 Lockhill Selma Rd, Suite 100 • San Antonio, Texas 78249 • 210.494.5511

SH 96, FM 270
PROJECT
LAYOUT

SHEET **02** OF **03**

DRAWN	FED.RD. DIV.NO.	FEDERAL AID PROJECT NO.		HIGHWAY NO.
AA	06			FM 270, ETC
DESIGNED	STATE	DIST.	COUNTY	SHEET NO.
JT	TEXAS	HOUSTON	GALVESTON	4
CHECKED	CONT.	SECT.	JOB	
NG	0912	73	215	
APPROVED				
DD				

PLOTDRIVER: LCBF.pltcfg PENTABLE: LCBF.tbl
DATE: 8/1/2023 11:51:29 AM USER: sss
FILE: c:\bms\pwe101-01\stella.staver-scull\dms22646\LCBF_PRJLYT02.dgn

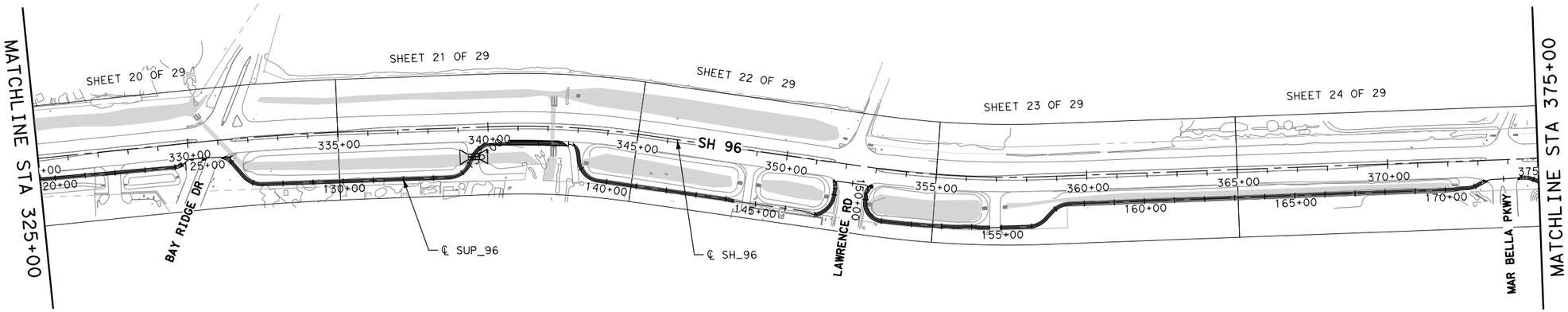

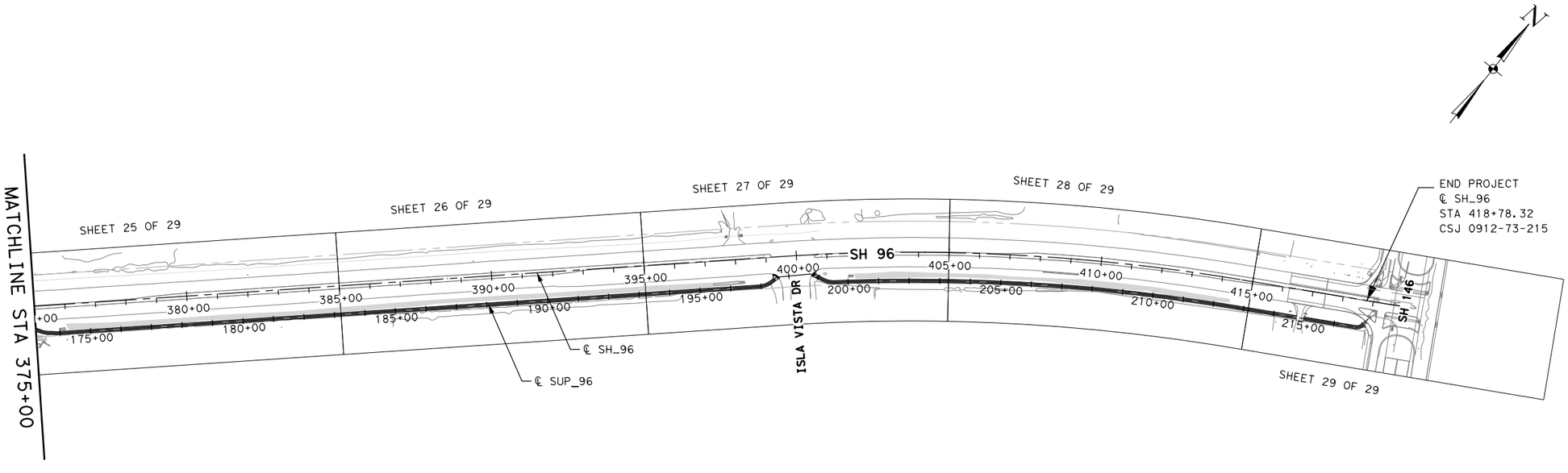

0′ 100′ 200′ 400′

N

LEGEND:

- EXISTING ROW
- CENTERLINE
- PROPOSED SIDEPATH
- EXISTING SIDEPATH
- PROPOSED SIDEWALK
- PROPOSED WIDENING
- WETLAND
- PROPOSED ASPHALT DRWY
- PROPOSED CONCRETE DRWY

NO.	DATE	REVISION	APPROVED

STATE OF TEXAS
JOHANNA TORRES
130063
LICENSED PROFESSIONAL ENGINEER
johannatorres
8/1/2023

Texas Department of Transportation
©2023

JONES|CARTER
Texas Board of Professional Engineers Registration No. F-23290
4350 Lockhill Selma Rd, Suite 100• San Antonio, Texas 78249 •210.494.5511

SH 96, FM 270
PROJECT
LAYOUT

SHEET **03** OF **03**

DRAWN	FED.RD. DIV.NO.	FEDERAL AID PROJECT NO.		HIGHWAY NO.
AA	06			FM 270, ETC
DESIGNED	STATE	DIST.	COUNTY	SHEET NO.
JT	TEXAS	HOUSTON	GALVESTON	5
CHECKED	CONT.	SECT.	JOB	
NG	0912	73	215	
APPROVED				
DD				

PENTABLE: LCBF.tbl
PLOTDRIVER: LCBF.pltcfg
DATE:8/1/2023 11:51:30 AM USER:sss
FILE:c:\dms\pwe101-01\stela.staver-scull\dms22646\LCBF_PRJLYT03.dgn

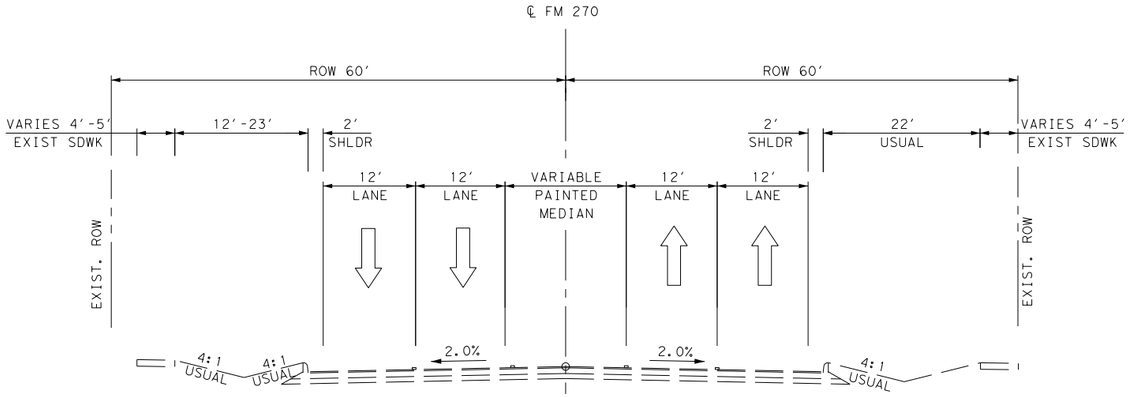

FM 270 EXISTING TYPICAL SECTION

STA 130+62 TO STA 150+03
N.T.S

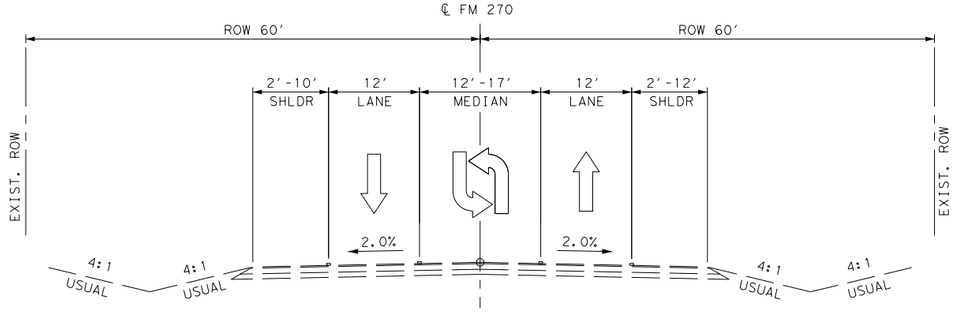

FM 270 EXISTING TYPICAL SECTION

STA 150+03 TO STA 177+04
STA 184+15 TO STA 189+73
STA 192+23 TO STA 220+43
N.T.S

LEGEND:

⇨ EXISTING LANE

NO.	DATE	REVISION	APPROVED

STATE OF TEXAS
JOHANNA TORRES
130063
LICENSED
PROFESSIONAL ENGINEER
johannatorres
8/1/2023

Texas Department of Transportation
©2023

JONES|CARTER
Texas Board of Professional Engineers Registration No. F-23290
4350 Lockhill Selma Rd, Suite 100• San Antonio, Texas 78249 •210.494.5511

SH 96, FM 270
FM 270 EXISTING TYPICAL SECTIONS

SHEET 01 OF 03

DRAWN	FED.RD. DIV.NO.	FEDERAL AID PROJECT NO.		HIGHWAY NO.
AA	06			FM 270, ETC
DESIGNED	STATE	DIST.	COUNTY	SHEET NO.
JT	TEXAS	HOUSTON	GALVESTON	6
CHECKED	CONT.	SECT.	JOB	
NG	0912	73	215	
APPROVED				
DD				

PLOTDRIVER: LCBF.pltcfg
PENTABLE: LCBF.tbl
DATE: 8/1/2023 11:51:31 AM USER: sss
FILE: c:\bms\pwe101-01\stela.staver-scul1\dms22646\LCBF_TYP01.dgn

PLOTDRIVER: LCBF.pltcfg
PENTABLE: LCBF.tbl
DATE: 8/1/2023 11:51:32 AM USER: sss
FILE: c:\bms\pwe101-01\stela.staver-scull\dms22646\LCBF_TYP02.dgn

LEGEND:

⇨ EXISTING LANE

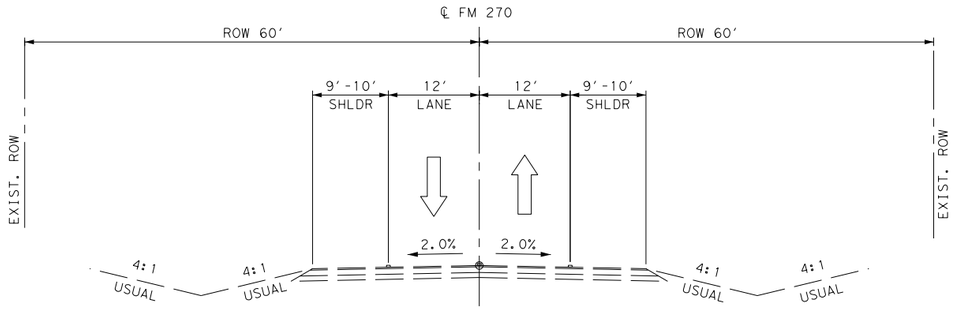

FM 270 EXISTING TYPICAL SECTION

STA 177+04 TO STA 184+15
N.T.S

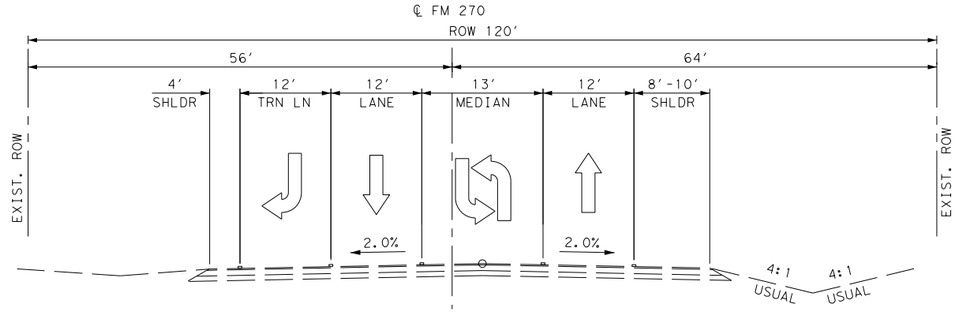

FM 270 EXISTING TYPICAL SECTION

STA 189+73 TO STA 192+23
N.T.S

NO.	DATE	REVISION	APPROVED

STATE OF TEXAS
JOHANNA TORRES
130063
LICENSED PROFESSIONAL ENGINEER
johannatorres
8/1/2023

Texas Department of Transportation
©2023

JONES|CARTER
Texas Board of Professional Engineers Registration No. F-23290
4350 Lockhill Selma Rd, Suite 100• San Antonio, Texas 78249 • 210.494.5511

SH 96, FM 270
FM 270 EXISTING TYPICAL SECTIONS

SHEET 02 OF 03

DRAWN	FED.RD. DIV.NO.	FEDERAL AID PROJECT NO.		HIGHWAY NO.
AA	06			FM 270, ETC
DESIGNED	STATE	DIST.	COUNTY	SHEET NO.
JT	TEXAS	HOUSTON	GALVESTON	7
CHECKED	CONT.	SECT.	JOB	
NG	0912	73	215	
APPROVED				
DD				

LEGEND:

⇨ EXISTING LANE

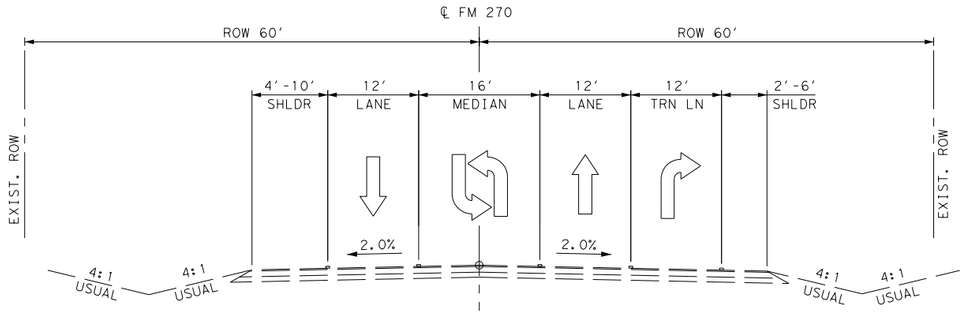

FM 270 EXISTING TYPICAL SECTION

STA 220+43 TO STA 222+69
STA 229+70 TO STA 236+78
N.T.S

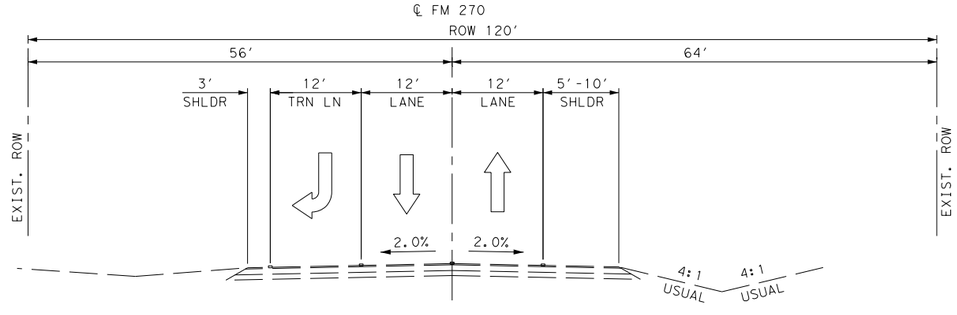

FM 270 EXISTING TYPICAL SECTION

STA 222+69 TO STA 229+70
N.T.S

NO.	DATE	REVISION	APPROVED

STATE OF TEXAS
JOHANNA TORRES
130063
LICENSED
PROFESSIONAL ENGINEER
Johanna Torres
8/1/2023

Texas Department of Transportation
©2023

JONES | CARTER
Texas Board of Professional Engineers Registration No. F-23290
4350 Lockhill Selma Rd, Suite 100 • San Antonio, Texas 78249 • 210.494.5511

SH 96, FM 270
FM 270 EXISTING
TYPICAL SECTIONS

SHEET 03 OF 03

DRAWN	FED. RD. DIV. NO.	FEDERAL AID PROJECT NO.		HIGHWAY NO.
AA	06			FM 270, ETC
DESIGNED				
JT	STATE	DIST.	COUNTY	SHEET NO.
CHECKED	TEXAS	HOUSTON	GALVESTON	8
NG	CONT.	SECT.	JOB	
APPROVED	0912	73	215	
DD				

PENTABLE: LCBF.tbl
PLOTDRIVER: LCBF.pltcfg
USER: sss
DATE: 8/1/2023 11:51:33 AM
FILE: c:\bms\pwe101-01\stela.staver-scull\dms22646\LCBF_TYP04.dgn

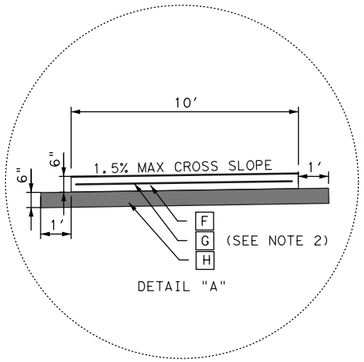

DETAIL "A"

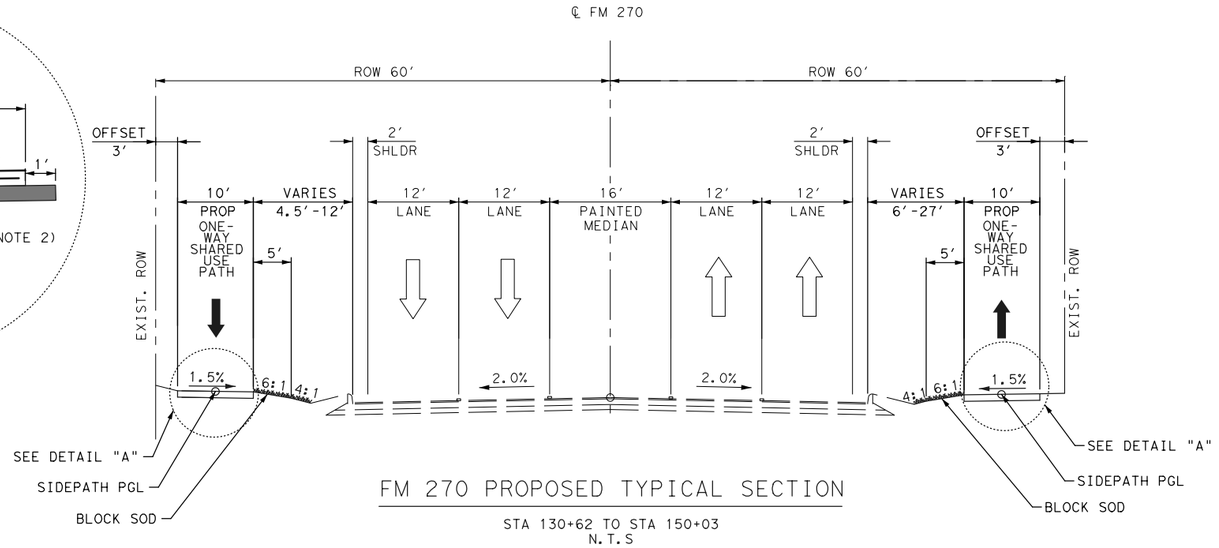

FM 270 PROPOSED TYPICAL SECTION

STA 130+62 TO STA 150+03
N.T.S

LEGEND:

- [A] 6" WHITE PAVEMENT MARKING
- [B] 3" HMCL ACP TY-D AC 1.5
- [C] 12" CEM TRT (PLNT MX)(CLN)(TY A)(GR-2)
- [D] 6" LIME TREATED SUBGRADE (6%)
- [E] ONE COURSE SURFACE TREATMENT
- [F] 6" JOINTED REINFORCED CONCRETE PAVEMENT
- [G] NO. 4 REINFORCEMENT BARS
- [H] 6" LIME TREATED SUBGRADE (6%)

➡ PROPOSED LANE

⇨ EXISTING LANE

NOTE:
1. PROPOSED SIDESLOPE VALUES SHOWN ARE USUAL. MAX SIDE SLOPE IS 4:1.
2. REFER TO JOINTED REINFORCED CONCRETE PAVEMENT DETAILS. CONCRETE AND REINFORCEMENT IS TO BE PAID FOR UNDER ITEM 531.

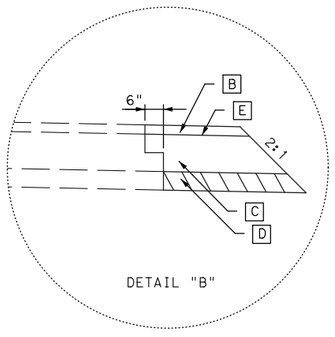

DETAIL "B"

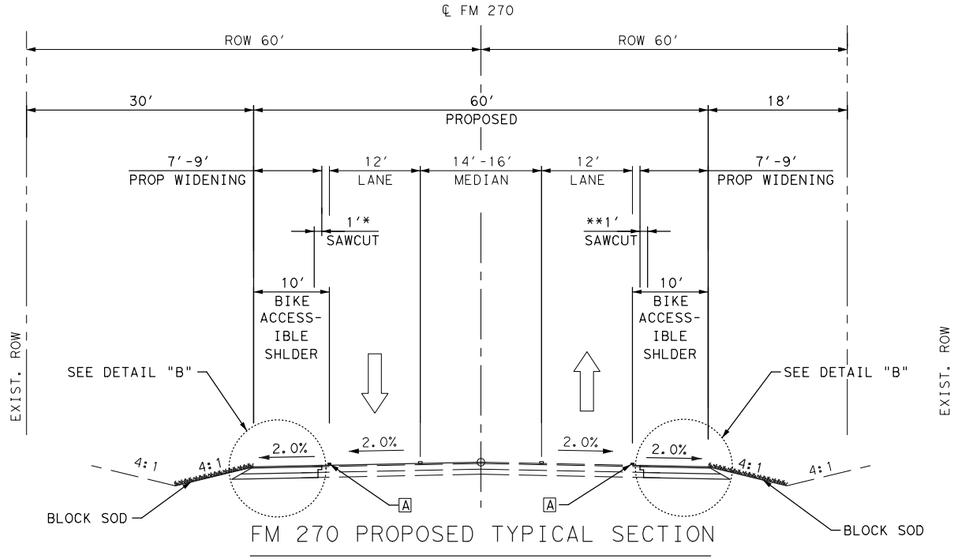

FM 270 PROPOSED TYPICAL SECTION

STA 150+03 TO STA 167+04
STA 184+15 TO STA 189+73
STA 196+76 TO STA 214+27
STA 222+69 TO STA 229+70
*3 FT SAWCUT STA 198+00 TO STA 208+05
** 3 FT SAWCUT STA 197+26 TO STA 200+69, STA 201+68 TO STA 203.43, STA 204+91 TO STA 205+75
N.T.S

NO.	DATE	REVISION	APPROVED

JOHANNA TORRES
130063
LICENSED PROFESSIONAL ENGINEER
STATE OF TEXAS
johannatorres
8/1/2023

Texas Department of Transportation
©2023

JONES|CARTER
Texas Board of Professional Engineers Registration No. F-23290
4350 Lockhill Selma Rd, Suite 100•San Antonio, Texas 78249•210.494.5511

SH 96, FM 270
FM 270 PROPOSED TYPICAL SECTIONS

SHEET 01 OF 05

DRAWN	FED.RD. DIV.NO.	FEDERAL AID PROJECT NO.		HIGHWAY NO.
AA	06			FM 270, ETC
DESIGNED	STATE	DIST.	COUNTY	SHEET NO.
JT	TEXAS	HOUSTON	GALVESTON	9
CHECKED	CONT.	SECT.	JOB	
NG	0912	73	215	
APPROVED				
DD				

PENTABLE:LCBF.tbl
PLOTDRIVER:LCBF.pltcfg
DATE:8/1/2023 11:51:35 AM USER:sss
FILE:c:\dms\pwe101-01\stela.staver-scull\dms22646\LCBF_TYP05.dgn

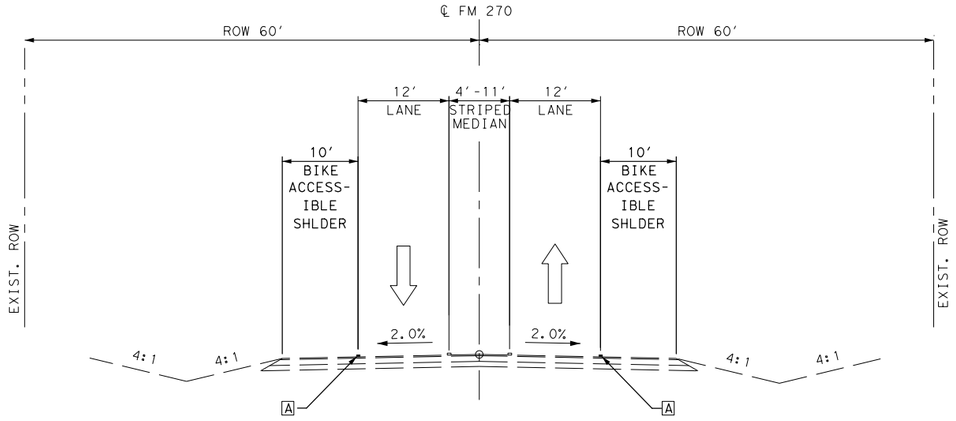

FM 270 PROPOSED TYPICAL SECTION

STA 197+26 TO STA 200+00
STA 214+27 TO STA 218+17
N.T.S

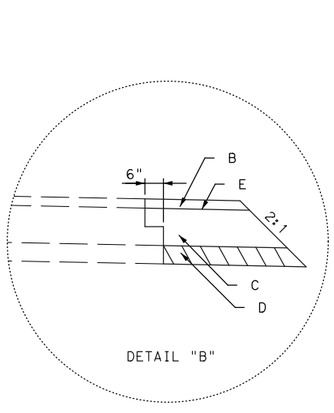

DETAIL "B"

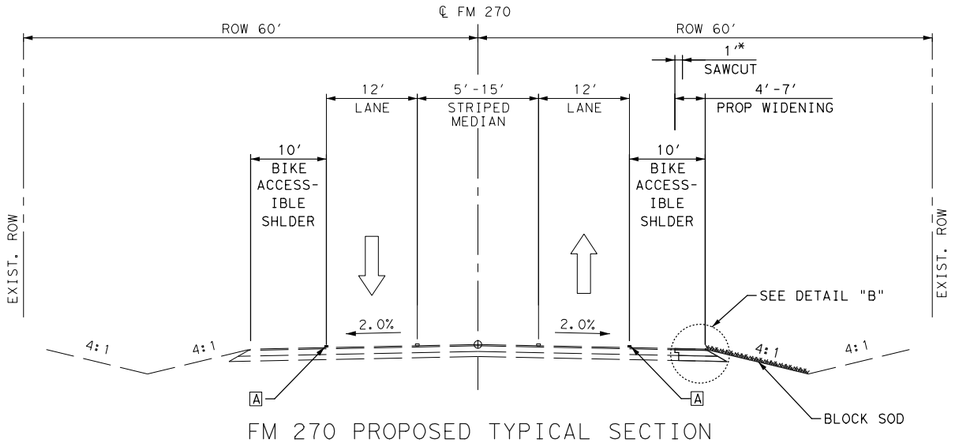

FM 270 PROPOSED TYPICAL SECTION

STA 173+42 TO STA 177+04
STA 218+17 TO STA 220+43
*3 FT SAWCUT STA 174+20 TO STA 175+56
*3 FT SAWCUT STA 219+44 TO STA 220+43
N.T.S

LEGEND:

- [A] 6" WHITE PAVEMENT MARKING
- [B] 3" HMCL ACP TY-D AC 1.5
- [C] 12" CEM TRT (PLNT MX)(CLN)(TY A)(GR-2)
- [D] 6" LIME TREATED SUBGRADE (6%)
- [E] ONE COURSE SURFACE TREATMENT
- [F] 6" JOINTED REINFORCED CONCRETE PAVEMENT
- [G] NO. 4 REINFORCEMENT BARS
- [H] 6" LIME TREATED SUBGRADE (6%)

➡ PROPOSED LANE

⇨ EXISTING LANE

NOTE:
1. PROPOSED SIDESLOPE VALUES SHOWN ARE USUAL. MAX SIDE SLOPE IS 4:1.
2. REFER TO JOINTED REINFORCED CONCRETE PAVEMENT DETAILS. CONCRETE AND REINFORCEMENT IS TO BE PAID FOR UNDER ITEM 531.

NO.	DATE	REVISION	APPROVED

STATE OF TEXAS
JOHANNA TORRES
130063
LICENSED
PROFESSIONAL ENGINEER
johannatorres
8/1/2023

Texas Department of Transportation
©2023

JONES|CARTER
Texas Board of Professional Engineers Registration No. F-23290
4350 Lockhill Selma Rd, Suite 100•San Antonio, Texas 78249•210.494.5511

SH 96, FM 270
FM 270 PROPOSED TYPICAL SECTIONS

SHEET 02 OF 05

DRAWN	FED.RD. DIV.NO.	FEDERAL AID PROJECT NO.		HIGHWAY NO.
AA	06			FM 270, ETC
DESIGNED	STATE	DIST.	COUNTY	SHEET NO.
JT	TEXAS	HOUSTON	GALVESTON	10
CHECKED	CONT.	SECT.	JOB	
NG	0912	73	215	
APPROVED				
DD				

PENTABLE:LCBF.tbl
PLOTDRIVER:LCBF.pltcfg
DATE:8/1/2023 11:51:36 AM USER:sss
FILE:c:\dms\pwe101-01\stela.staver-scull\dms22646\LCBF_TYP06.dgn

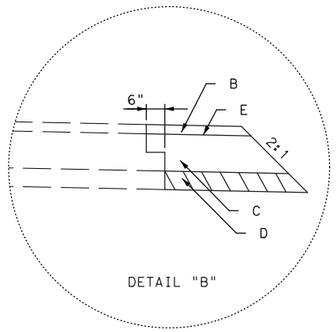

DETAIL "B"

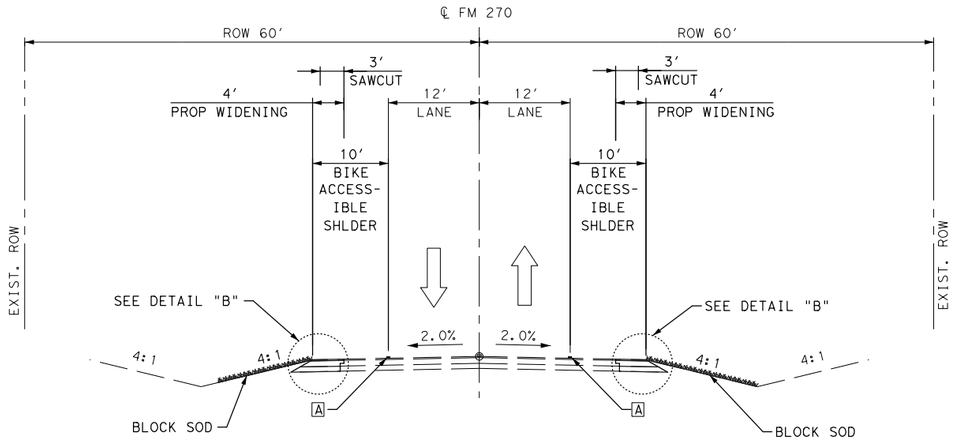

FM 270 PROPOSED TYPICAL SECTION

STA 177+04 TO STA 184+15
N.T.S

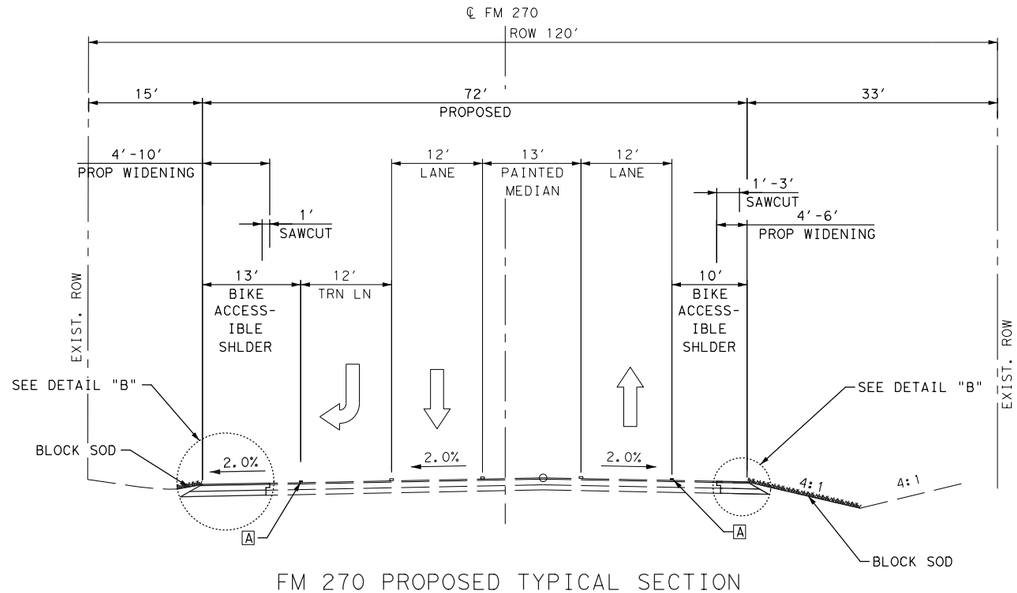

FM 270 PROPOSED TYPICAL SECTION

STA 189+73 TO STA 192+23
N.T.S

LEGEND:

- [A] 6" WHITE PAVEMENT MARKING
- [B] 3" HMCL ACP TY-D AC 1.5
- [C] 12" CEM TRT (PLNT MX)(CLN)(TY A)(GR-2)
- [D] 6" LIME TREATED SUBGRADE (6%)
- [E] ONE COURSE SURFACE TREATMENT
- [F] 6" JOINTED REINFORCED CONCRETE PAVEMENT
- [G] NO. 4 REINFORCEMENT BARS
- [H] 6" LIME TREATED SUBGRADE (6%)

➡ PROPOSED LANE

⇨ EXISTING LANE

NOTE:
1. PROPOSED SIDESLOPE VALUES SHOWN ARE USUAL. MAX SIDE SLOPE IS 4:1.
2. REFER TO JOINTED REINFORCED CONCRETE PAVEMENT DETAILS. CONCRETE AND REINFORCEMENT IS TO BE PAID FOR UNDER ITEM 531.

NO.	DATE	REVISION	APPROVED

JOHANNA TORRES
130063
LICENSED
PROFESSIONAL ENGINEER
STATE OF TEXAS
johannatorres
8/1/2023

Texas Department of Transportation
©2023

JONES|CARTER
Texas Board of Professional Engineers Registration No. F-23290
4350 Lockhill Selma Rd, Suite 100•San Antonio, Texas 78249•210.494.5511

SH 96, FM 270
FM 270 PROPOSED
TYPICAL SECTIONS

SHEET 03 OF 05

DRAWN	FED.RD. DIV.NO.	FEDERAL AID PROJECT NO.		HIGHWAY NO.
AA	06			FM 270, ETC
DESIGNED	STATE	DIST.	COUNTY	SHEET NO.
JT	TEXAS	HOUSTON	GALVESTON	11
CHECKED	CONT.	SECT.	JOB	
NG	0912	73	215	
APPROVED				
DD				

PENTABLE:LCBF.tbl
PLOTDRIVER:LCBF.pltcfg
DATE:8/1/2023 11:51:37 AM USER:sss
FILE:c:\dms\pwe101-01\stela.staver-scul1\dms22646\LCBF_TYP07.dgn

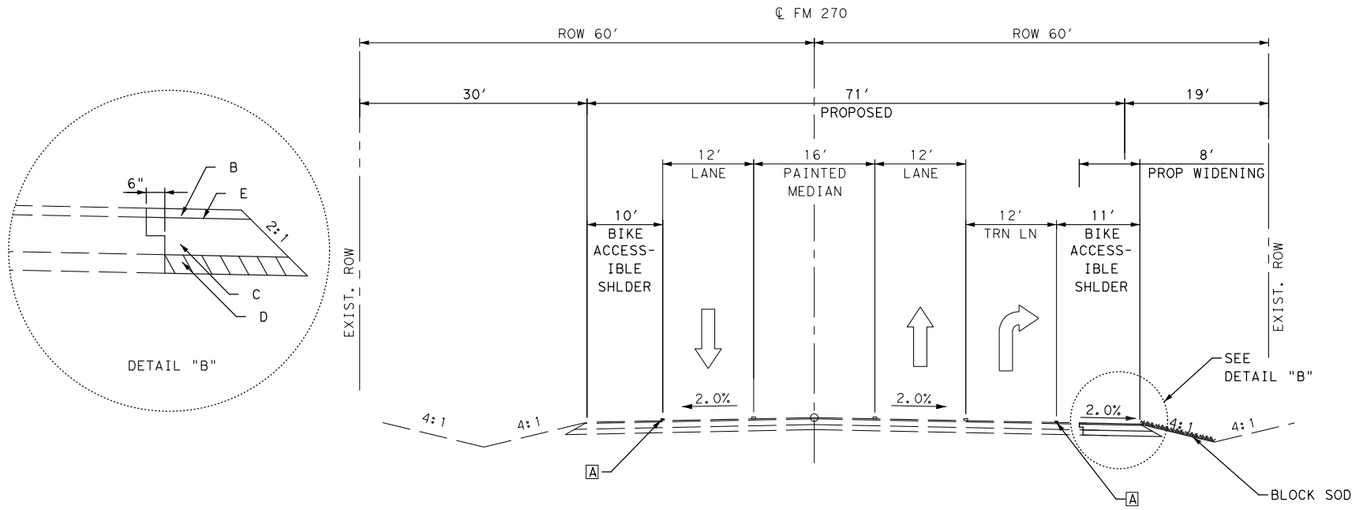

FM 270 PROPOSED TYPICAL SECTION

STA 220+43 TO STA 222+69
N.T.S

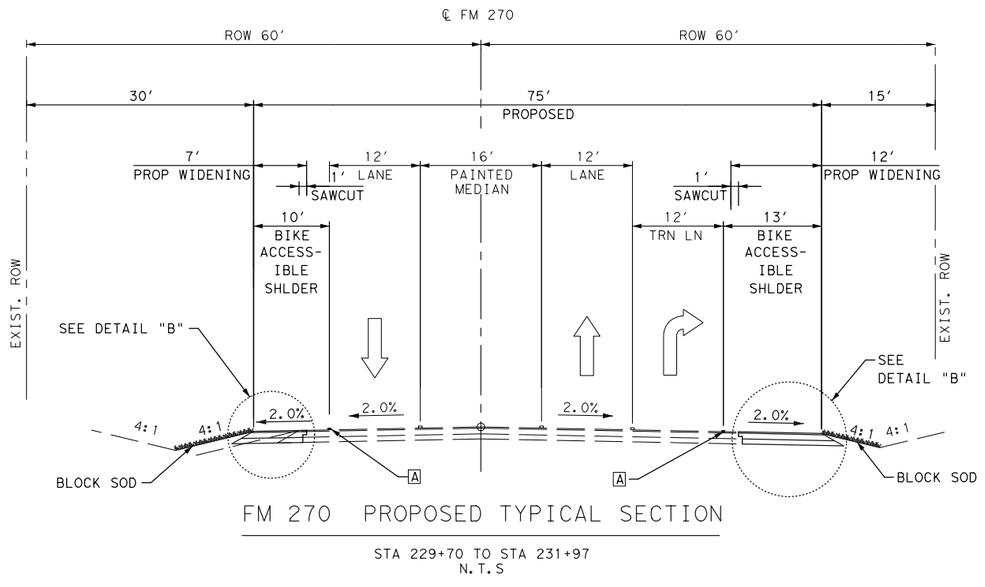

FM 270 PROPOSED TYPICAL SECTION

STA 229+70 TO STA 231+97
N.T.S

LEGEND:

- [A] 6" WHITE PAVEMENT MARKING
- [B] 3" HMCL ACP TY-D AC 1.5
- [C] 12" CEM TRT (PLNT MX)(CLN)(TY A)(GR-2)
- [D] 6" LIME TREATED SUBGRADE (6%)
- [E] ONE COURSE SURFACE TREATMENT
- [F] 6" JOINTED REINFORCED CONCRETE PAVEMENT
- [G] NO. 4 REINFORCEMENT BARS
- [H] 6" LIME TREATED SUBGRADE (6%)

➡ PROPOSED LANE

⇨ EXISTING LANE

NOTE:
1. PROPOSED SIDESLOPE VALUES SHOWN ARE USUAL. MAX SIDE SLOPE IS 4:1.
2. REFER TO JOINTED REINFORCED CONCRETE PAVEMENT DETAILS. CONCRETE AND REINFORCEMENT IS TO BE PAID FOR UNDER ITEM 531.

NO.	DATE	REVISION	APPROVED

STATE OF TEXAS
JOHANNA TORRES
130063
LICENSED
PROFESSIONAL ENGINEER
johannatorres
8/1/2023

Texas Department of Transportation
©2023

JONES|CARTER
Texas Board of Professional Engineers Registration No. F-23290
4350 Lockhill Selma Rd, Suite 100•San Antonio, Texas 78249•210.494.5511

SH 96, FM 270
FM 270 PROPOSED
TYPICAL SECTIONS

SHEET 04 OF 05

DRAWN	FED.RD. DIV.NO.	FEDERAL AID PROJECT NO.		HIGHWAY NO.
AA	06			FM 270, ETC
DESIGNED	STATE	DIST.	COUNTY	SHEET NO.
JT	TEXAS	HOUSTON	GALVESTON	12
CHECKED	CONT.	SECT.	JOB	
NG	0912	73	215	
APPROVED				
DD				

PENTABLE:LCBF.tbl
PLOTDRIVER:LCBF.pltcfg
DATE:8/1/2023 11:51:38 AM USER:sss
FILE:c:\dms\pwe101-01\stela.staver-scull\dms22646\LCBF_TYP08.dgn

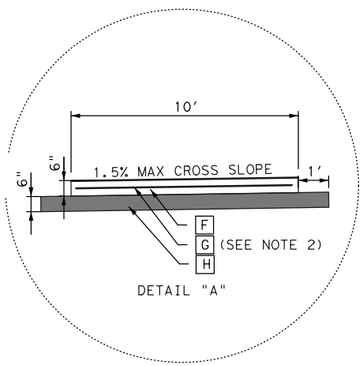

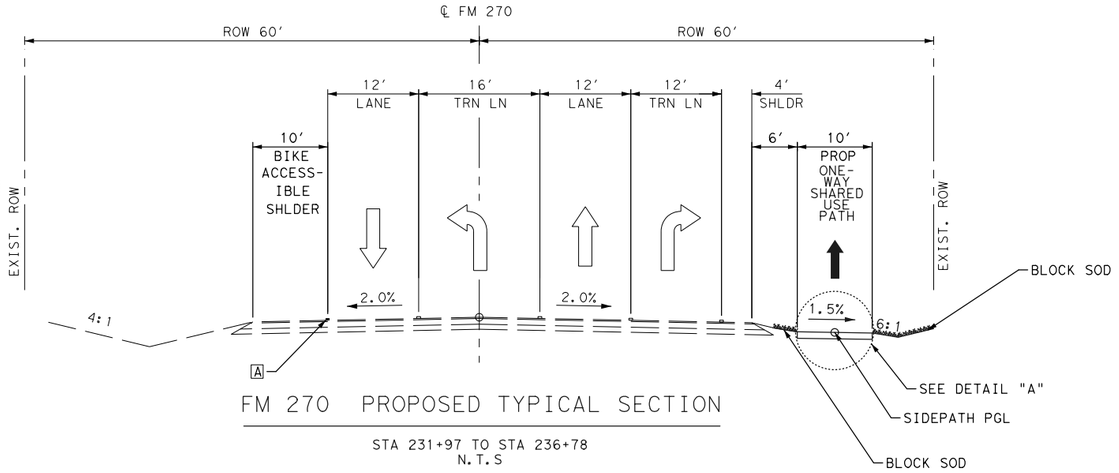

FM 270 PROPOSED TYPICAL SECTION

STA 231+97 TO STA 236+78
N.T.S

LEGEND:

- A 6" WHITE PAVEMENT MARKING
- B 3" HMCL ACP TY-D AC 1.5
- C 12" CEM TRT (PLNT MX)(CLN)(TY A)(GR-2)
- D 6" LIME TREATED SUBGRADE (6%)
- E ONE COURSE SURFACE TREATMENT
- F 6" JOINTED REINFORCED CONCRETE PAVEMENT
- G NO. 4 REINFORCEMENT BARS
- H 6" LIME TREATED SUBGRADE (6%)

➡ PROPOSED LANE

⇨ EXISTING LANE

NOTE:
1. PROPOSED SIDESLOPE VALUES SHOWN ARE USUAL. MAX SIDE SLOPE IS 4:1.
2. REFER TO JOINTED REINFORCED CONCRETE PAVEMENT DETAILS. CONCRETE AND REINFORCEMENT IS TO BE PAID FOR UNDER ITEM 531.

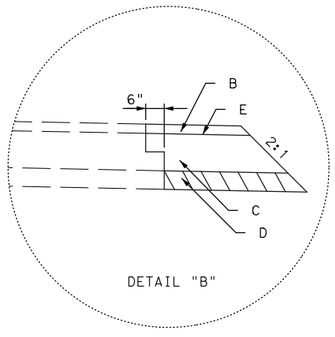

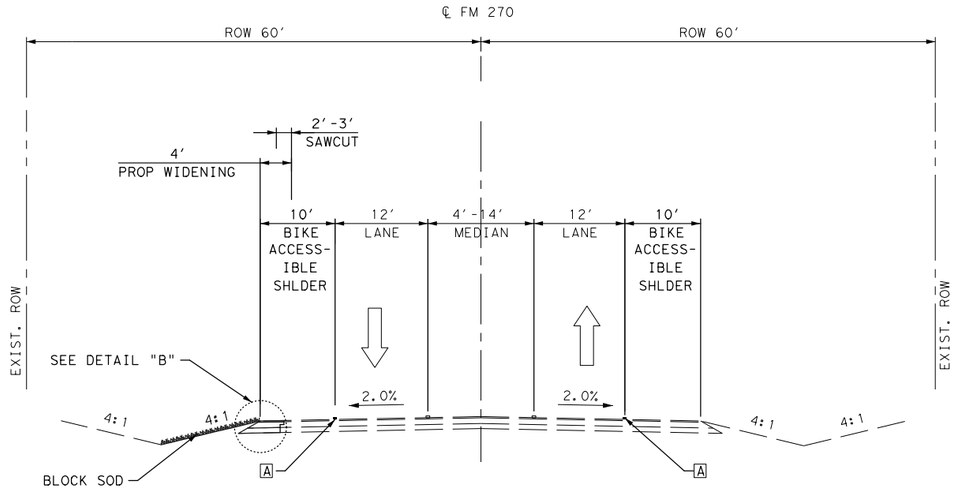

FM 270 PROPOSED TYPICAL SECTION

STA 167+04 TO STA 173+42
STA 192+23 TO STA 196+76
N.T.S

NO.	DATE	REVISION	APPROVED

STATE OF TEXAS
JOHANNA TORRES
130063
LICENSED PROFESSIONAL ENGINEER
johannatorres
8/1/2023

Texas Department of Transportation
©2023

JONES|CARTER
Texas Board of Professional Engineers Registration No. F-23290
4350 Lockhill Selma Rd, Suite 100•San Antonio, Texas 78249•210.494.5511

SH 96, FM 270
FM 270 PROPOSED TYPICAL SECTIONS

SHEET 05 OF 05

DRAWN	FED.RD. DIV.NO.	FEDERAL AID PROJECT NO.		HIGHWAY NO.
AA	06			FM 270, ETC
DESIGNED	STATE	DIST.	COUNTY	SHEET NO.
JT	TEXAS	HOUSTON	GALVESTON	13
CHECKED	CONT.	SECT.	JOB	
NG	0912	73	215	
APPROVED				
DD				

PENTABLE:LCBF.tbl
PLOTDRIVER:LCBF.pltcfg
DATE:8/1/2023 11:51:40 AM USER:sss
FILE:c:\dms\pwe101-01\stella.staver-scull\dms22646\LCBF_TYP09.dgn

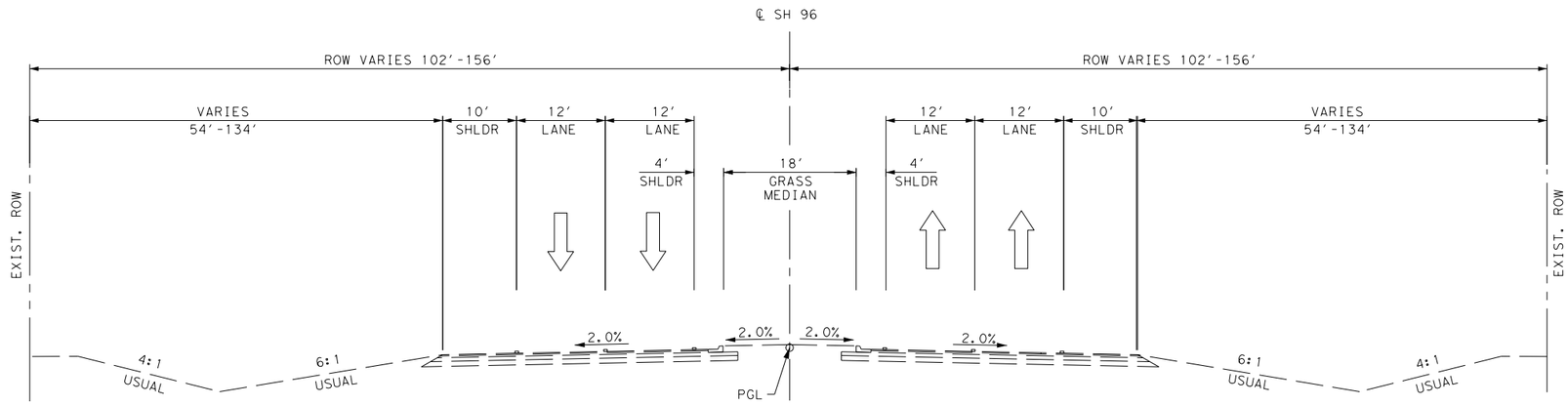

SH 96 EXISTING TYPICAL SECTION

FM 270 TO SH 146
N.T.S

LEGEND:

- [A] 6" WHITE PAVEMENT MARKING
- [B] 3" HMCL ACP TY-D AC 1.5
- [C] 12" CEM TRT (PLNT MX)(CLN)(TY A)(GR-2)
- [D] 6" LIME TREATED SUBGRADE (6%)
- [E] ONE COURSE SURFACE TREATMENT
- [F] 6" JOINTED REINFORCED CONCRETE PAVEMENT
- [G] NO. 4 REINFORCEMENT BARS
- [H] 6" LIME TREATED SUBGRADE (6%)

➡ PROPOSED LANE

⇨ EXISTING LANE

NOTE:
1. PROPOSED SIDESLOPE VALUES SHOWN ARE USUAL. MAX SIDE SLOPE IS 4:1.
2. REFER TO JOINTED REINFORCED CONCRETE PAVEMENT DETAILS. CONCRETE AND REINFORCEMENT IS TO BE PAID FOR UNDER ITEM 531.

NO.	DATE	REVISION	APPROVED

JOHANNA TORRES
130063
LICENSED PROFESSIONAL ENGINEER
STATE OF TEXAS
johannatorres
8/1/2023

Texas Department of Transportation
©2023

JONES|CARTER
Texas Board of Professional Engineers Registration No. F-23290
4350 Lockhill Selma Rd, Suite 100• San Antonio, Texas 78249 •210.494.5511

SH 96, FM 270
SH 96 EXISTING TYPICAL SECTION

SHEET 01 OF 01

DRAWN	FED.RD. DIV.NO.	FEDERAL AID PROJECT NO.		HIGHWAY NO.
AA	06			FM 270,ETC
DESIGNED	STATE	DIST.	COUNTY	SHEET NO.
JT	TEXAS	HOUSTON	GALVESTON	14
CHECKED	CONT.	SECT.	JOB	
NG	0912	73	215	
APPROVED				
DD				

PENTABLE:LCBF.tbl
PLOTDRIVER:LCBF.pltcfg
DATE:8/1/2023 11:51:40 AM USER:sss
FILE:c:\dms\pwe101-01\stela.staver-scull\dms22646\LCBF_TYP10.dgn

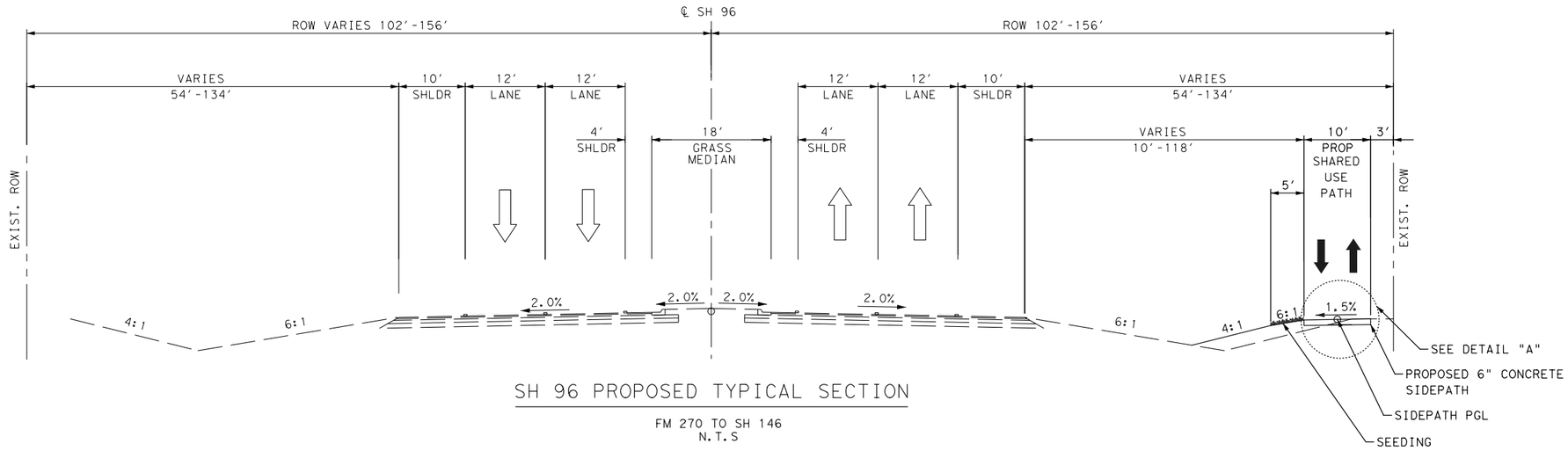

SH 96 PROPOSED TYPICAL SECTION

FM 270 TO SH 146
N.T.S

LEGEND:

- [A] 6" WHITE PAVEMENT MARKING
- [B] 3" HMCL ACP TY-D AC 1.5
- [C] 12" CEM TRT (PLNT MX)(CLN)(TY A)(GR-2)
- [D] 6" LIME TREATED SUBGRADE (6%)
- [E] ONE COURSE SURFACE TREATMENT
- [F] 6" JOINTED REINFORCED CONCRETE PAVEMENT
- [G] NO. 4 REINFORCEMENT BARS
- [H] 6" LIME TREATED SUBGRADE (6%)

➡ PROPOSED LANE

⇨ EXISTING LANE

NOTE:
1. PROPOSED SIDESLOPE VALUES SHOWN ARE USUAL. MAX SIDE SLOPE IS 4:1.
2. REFER TO JOINTED REINFORCED CONCRETE PAVEMENT DETAILS. CONCRETE AND REINFORCEMENT IS TO BE PAID FOR UNDER ITEM 531.

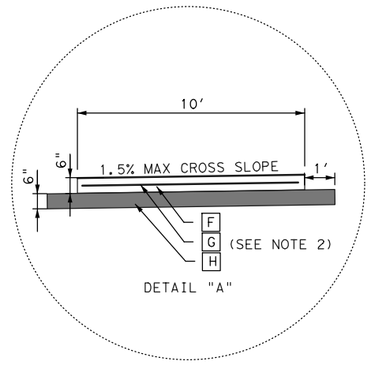

DETAIL "A"

NO.	DATE	REVISION	APPROVED

STATE OF TEXAS
JOHANNA TORRES
130063
LICENSED
PROFESSIONAL ENGINEER
johannatorres
8/1/2023

Texas Department of Transportation
©2023

JONES|CARTER
Texas Board of Professional Engineers Registration No. F-23290
4350 Lockhill Selma Rd, Suite 100•San Antonio, Texas 78249•210.494.5511

SH 96, FM 270
SH 96 PROPOSED
TYPICAL SECTION

SHEET 01 OF 01

DRAWN	FED.RD. DIV.NO.	FEDERAL AID PROJECT NO.		HIGHWAY NO.
AA	06			FM 270,ETC
DESIGNED	STATE	DIST.	COUNTY	SHEET NO.
JT	TEXAS	HOUSTON	GALVESTON	15
CHECKED	CONT.	SECT.	JOB	
NG	0912	73	215	
APPROVED				
DD				

PENTABLE:LCBF.tbl
PLOTDRIVER:LCBF.pltcfg
DATE:8/1/2023 11:51:42 AM USER:sss
FILE:c:\bms\pwe101-01\stela.staver-scull\dms22646\LCBF_TYP11.dgn

County: Galveston **Control:** 0912-73-215

Highway: Various

General Notes:

General:

Area Engineer contact information for this project follows:

David Lazaro, P.E., Area Engineer, (407) 978-2500, David.Lazaro@txdot.gov
Joel Clarke, Assistant Area Engineer, Joel.Clarke@txdot.gov

Submit any questions about this project via the Letting Pre-Bid Q&A web page, located at:

https://tableau.txdot.gov/views/ProjectInformationDashboard/NoticetoContractors

The Letting Pre-Bid Q&A web page for each project can be accessed by scrolling or filtering the dashboard using the controls on the left side to navigate to the project. Hover over the blue hyperlink of the project to view the Q&A and click on the link in the window that pops up.

Large files with relevant project documentation, such as Geotech reports, As-Built plans, and cross-sections will continue to be provided on the following FTP site:

Index of /pub/txdot-info/Pre-Letting Responses/Houston District (state.tx.us) or

https://ftp.dot.state.tx.us/pub/txdot-info/Pre-Letting%20Responses/Houston%20District/

If fixed features require, the governing slopes shown may vary between the limits shown and to the extent determined by the Engineer.

Superelevate the curves to match the existing surface.

Notify the Engineer immediately if discrepancies are discovered in the horizontal control or the benchmark data.

The following standard detail sheets are modified:

Modified Standards

Miscellaneous Curb and Sidewalk Details (SA District) (MOD)

References to manufacturer's trade name or catalog numbers are for the purpose of identification only. Similar materials from other manufacturers are permitted if they are of equal quality, comply with the specifications for this project, and are approved, except for roadway illumination, electrical, and traffic signal items.

County: Galveston **Control:** 0912-73-215

Highway: Various

The cost for materials, labor, and incidentals to provide for traffic across the roadway and for ingress and egress to private property in accordance with Section 7.2.4 of the standard specifications is subsidiary to the various bid items. Restore access roadways to their original condition upon completing construction.

Grade street intersections and median openings for surface drainage.

If a foundation is to be placed where a riprap surface or an asphalt concrete surface presently exists, use caution in breaking out the existing surface for placement. Break out no greater area than is required to place the foundation. After placing the foundation, wrap the periphery with 0.5 in. pre-molded mastic expansion joint. Then replace the remaining portion of the broken out surface with Class A or Class C concrete or cold mix asphalt concrete to the exact slope, pattern, and thickness of the existing riprap or asphalt. Payment for breaking out the existing surface, wrapping the foundation, and replacing the surface is subsidiary to the various bid items.

The lengths of the posts for ground mounted signs and the tower legs for the overhead sign supports are approximate. Verify the lengths before ordering these materials to meet the existing field conditions and to conform to the minimum sign mounting heights shown in the plans.

Furnish aluminum Type A signs instead of plywood signs for signs shown on the Summary of Small Signs sheet.

Stencil the National Bridge Inventory (NBI) number on each existing bridge shown on these plans. The NBI number is shown above the title block for each bridge layout.

Clearly mark or highlight on the shop drawings, the items being furnished for this project. Submit required shop drawings in accordance with the shop drawing distribution list shown in the note for Item 5 for review and distribution.

Right of way parcels or utility adjustments shown to be unclear on the plans but not listed on the special provisions will have no effect on construction.

Make requests for additional soil information for this project at the Area Engineer's office.

Unless otherwise shown on the plans or otherwise directed, commence work after sunrise and ensure construction equipment is off the road by sunset.

Procure permits and licenses, which are to be issued by the City, County, or Municipal Utility District.

General: Traffic Signals

For traffic signal items, use materials from the Pre-Qualified Producers List (located at http://www.dot.state.tx.us/GSD/purchasing/supps.htm) and the materials pre-qualified for

illumination and electrical items (located at http://ftp.dot.state.tx.us/pub/txdot-info/cmd/mpl/riaes.pdf) as shown on the Department's Material Producers List and the Roadway Illumination and Electrical Supplies List. Check the latest links on the Department's website for these lists. No substitutions will be allowed for materials found on these lists.

General: Site Management

Mark stations every 100 ft. and maintain the markings for the project duration. Remove the station markings at the completion of the project. This work is subsidiary to the various bid items.

Do not mix or store materials, or store or repair equipment, on top of concrete pavement or bridge decks unless authorized by the Engineer. Permission will be granted to store materials on surfaces if no damage or discoloration will result.

Personal vehicles of employees are not permitted to park within the right of way, including sections closed to public traffic. Employees may park on the right of way at the Contractor's office, equipment, and materials storage yard sites.

Assume ownership of debris and dispose of at an approved location. Do not dispose of debris on private property unless approved in writing by the District Engineer.

Control the dust caused by construction operations. For sweeping the base material in preparation for laying asphalt and for sweeping the finished concrete pavement, use one of the following types of sweepers or approved equal:

Tricycle Type	**Truck Type - 4 Wheel**
Wayne Series 900	M-B Cruiser II
Elgin White Wing	Wayne Model 945
Elgin Pelican	Mobile TE-3
	Mobile TE-4
	Murphy 4042

General: Traffic Control and Construction

Schedule construction operations such that preparing individual items of work follows in close sequence to constructing storm drains in order to provide as little inconvenience as practical to the businesses and residents along the project.

Schedule work so that the base placement operations follow the subgrade work as closely as practical to reduce the hazard to the traveling public and to prevent undue delay caused by wet weather.

County: Galveston **Control:** 0912-73-215

Highway: Various

This project requires extensive grading operations in an environmentally sensitive area.

If relocating mailboxes, place them with the post firmly in the ground at nearby locations. Upon completing the project, the Engineer will locate the final mailbox placement. Perform this work in accordance with the requirements of the Item, "Mailbox Assemblies," except for measurement and payment. This work is subsidiary to the various bid items.

If fences cross construction easements shown on the plans and work is required beyond the fences, remove and replace the fences as directed. This work and the materials are subsidiary to the various bid items.

When design details are not shown on the plans, provide signs and arrows conforming to the latest "Standard Highway Sign Designs for Texas" manual.

General: Utilities

Consider the locations of underground utilities depicted in the plans as approximate and employ responsible care to avoid damaging utility facilities. Depending upon scope and magnitude of planned construction activities, advanced field confirmation by the utility owner or operator may be prudent. Where possible, protect and preserve permanent signs, markers, and designations of underground facilities.

If the Contractor damages or causes damage (breaks, leaks, nicks, dents, gouges, etc.) to the utility, contact the utility facility owner or operator immediately.

At least 72 hours before starting work, make arrangements for locating existing Department-owned above ground and underground fiber optic, communications, power, illumination, and traffic signal cabling and conduit. Do this by calling the Department's Houston District Traffic Signal Operations Office at 713-802-5662, or by e-mailing the Department's Houston District Traffic Signal Operations Office at: HOU-LocateRequest@txdot.gov, to schedule marking of underground lines on the ground. Use caution if working in these areas to avoid damaging or interfering with existing facilities.

Notify the Engineer at least 48 hours before constructing junction boxes at storm drain and utility intersections.

Install or remove poles and luminaires located near overhead or underground electrical lines using established industry and utility safety practices. Consult the appropriate utility company before beginning such work.

If overhead or underground power lines need to be de-energized, contact the electrical service provider to perform this work. Costs associated with de-energizing the power lines or other protective measures required are at no expense to the Department.

If working near power lines, comply with the appropriate sections of Texas State Law and Federal Regulations relating to the type of work involved.

Perform electrical work in conformance with the National Electrical Code (NEC) and Department's standard sheets.

Before beginning any underground work, notify the City of Houston's Chief Inspector, Public Works and Engineering, to establish the locations of any existing electrical systems for lighting facilities within the limits of this project.

Item 5: Control of Work

The cross-section data provided above is for non-construction purposes only and it is the responsibility of the prospective bidder to validate the data with the appropriate plans, specifications, and estimates for the projects.

Submit shop drawings electronically for the fabrication of items as documented in Table 2 below. Information and requirements for electronic submittals can be viewed in the "Guide to Electronic Shop Drawing Submittal" which can be accessed through the following web link, ftp://ftp.dot.state.tx.us/pub/txdot-info/library/pubs/bus/bridge/e_submit_guide.pdf. References to 11 in. x 17 in. sheets in individual specifications for structural items imply electronic CAD sheets.

Table 2

2014 Construction Specification Required Shop/Working Drawing Submittals - Consultant Generated Plans

Spec Item No.'s	Product	Submittal Required	Approval Required (Y/N)	Contractor/ Fabricator P.E. Seal Required	Reviewing Party	Shop or Working Drawing (Note 1)
7.16.1&.2	Construction Load Analyses	Y	Y	Y	D	WD
400	Excavation and Backfill for Structures (cofferdams)	Y	N	Y	D	WD
403	Temporary Special Shoring	Y	N	Y	D	WD
420	Formwork/Falsework	Y	N	Y	D	WD
423	Retaining Walls, (calcs req'd.)	Y	Y	Y	D	SD
425	Optional Design Calculations (Prstrs Bms)	Y	Y	Y	D	SD
425	Prestr Concr Sheet Piling	Y	Y	N	D	SD
425	Prestr Concr Beams	Y	Y	N	D	SD
425	Prestr Concr Bent	Y	Y	N	D	SD
426	Post Tension Details	Y	Y	N	D	SD
434	Elastomeric Bearing Pads (All)	Y	Y	N	D	SD
441	Bridge Protective Assembly	Y	Y	N	D	SD

441	Misc Steel (various steel assemblies)	Y	Y	N	D	SD
441	Steel Pedestals (bridge raising)	Y	Y	N	D	SD
441	Steel Bearings	Y	Y	N	D	SD
441	Steel Bent	Y	Y	N	D	SD
441	Steel Diaphragms	Y	Y	N	D	SD
441	Steel Finger Joint	Y	Y	N	D	SD
441	Steel Plate Girder	Y	Y	N	D	SD
441	Steel Tub-Girders	Y	Y	N	D	SD
441	Erection Plans, including Falsework	Y	N	Y	D	WD
449	Sign Structure Anchor Bolts	Y	Y	N	D	SD
450	Railing	Y	Y	N	D	SD
462	Concrete Box Culvert	Y	Y	N	D	SD
462	Concrete Box Culvert (Alternate Designs Only,calcs reqd.)	Y	Y	Y	D	SD
464	Reinforced Concrete Pipe (Jack and Bore only; ONLY when requested)	Y	Y	Y	D	SD
465	Pre-cast Junction Boxes, Grates, and Inlets	Y	Y	N	D	SD
465	Pre-cast Junction Boxes, Grates, and Inlets (Alternate Designs Only, calcs req'd.)	Y	Y	Y	D	SD
466	Pre-cast Headwalls and Wingwalls	Y	Y	N	D	SD
467	Pre-cast Safety End Treatments	Y	Y	N	D	SD
495	Raising Existing Structure (calcs reqd.)	Y	Y	Y	D	SD
610	Roadway Illumination Supports (Non-Standard only, calcs reqd.)	Y	Y	Y	D	SD
613	High Mast Illumination Poles (Non-standard only, calcs reqd.)	Y	Y	Y	D	SD
627	Treated Timber Poles	Y	Y	N	D	SD
644	Special Non-Standard Supports (Bridge Mounts, Barrier Mounts, Etc.)	Y	Y	Y	D	SD
647	Large Roadside Sign Supports	Y	Y	Y	D	SD
650	Cantilever Sign Structure Supports - Alternate Design Calcs.	Y	Y	Y	D	SD
650	Sign Structures	Y	Y	N	D	SD
680	Installation of Highway Traffic Signals	Y	Y	N	D	SD
682	Vehicle and Pedestrian Signal Heads	Y	Y	N	D	SD
684	Traffic Signal Cables	Y	Y	N	D	SD
685	Roadside Flashing Beacon Assemblies	Y	Y	N	D	SD
686	Traffic Signal Pole Assemblies (Steel) (Non-Standard only)	Y	Y	Y	D	SD
687	Pedestal Pole Assemblies	Y	Y	N	D	SD
688	Detectors	Y	Y	N	D	SD
784	Repairing Steel Bridge Members	Y	Y	Y	D	WD
SS	Prestr Concr Crown Span	Y	Y	N	D	SD
SS	Sound Barrier Walls	Y	Y	Y	D	SD

SS	Camera Poles	Y	Y	Y	TMS	SD
SS	Pedestrian Bridge (Calcs req'd.)	Y	Y	Y	D	SD
SS	Screw-In Type Anchor Foundations	Y	Y	N	D	SD
SS	Fiber Optic/Communication Cable	Y	Y	N	TMS	SD
SS	Spread Spectrum Radios for Signals	Y	Y	N	D	SD
SS	VIVDS System for Signals	Y	Y	N	D	SD
SS	CTMS Equipment	Y	Y	N	TMS	SD

Notes:

1. Document flow for Working Drawings differs from Shop Drawings in that Working Drawings must be submitted to the Engineer rather than the Engineer of Record and they are for the information of the Engineer only; an approval stamp and distribution to all project offices is not required.

Key to Reviewing Party

D – Consultant: Submit to Engineer of Record at jtorres@quiddity.com
TMS – Traffic Management System

Computerized Traffic Management Systems (CTMS)	HOU-CTMSShpDrwgs@txdot.gov

When a precast or cast-in-place concrete element is included in the plans, a precast concrete alternate may be submitted in accordance with "Standard Operating Procedure for Alternate Precast Proposal Submission" found online at https://www.txdot.gov/inside-txdot/forms-publications/consultants-contractors/publications/bridge.html#design. Acceptance or denial of an alternate is at the sole discretion of the Engineer. Impacts to the project schedule and any additional costs resulting from the use of alternates are the sole responsibility of the Contractor.

Item 6: Control of Materials

To comply with the latest provisions of the Build America, Buy America Act (BABA Act) of the Bipartisan Infrastructure Law, the Contractor must submit a notarized original of the TxDOT Construction Material Buy America Certification Form for items classified as construction materials. This form is not required for materials classified as a manufactured product.

Refer to the Buy America Material Classification Sheet for clarification on material categorization.

The Buy America Material Classification Sheet is located at the below link.

https://www.txdot.gov/business/resources/materials/buy-america-material-classification-sheet.html for clarification on material categorization.

Item 7: Legal Relations and Responsibilities

Do not initiate activities in a Project Specific Location (PSL), associated with a U.S. Army Corps of Engineers (USACE) permit area, that have not been previously evaluated by the USACE as

part of the permit review of this project. Such activities include those pertaining to, but are not limited to, haul roads, equipment staging areas, borrow and disposal sites. Associated defined

here means materials are delivered to or from the PSL. The permit area includes the waters of the U.S. or associated wetlands affected by activities associated with this project. Special restrictions may be required for such work. Assume responsibility for consultations with the USACE regarding activities, including PSLs that have not been previously evaluated by the USACE. Provide the Department with a copy of consultations or approvals from the USACE before initiating activities.

The Contractor may proceed with activities in PSLs that do not affect a USACE permit area if a self-determination has been made that the PSL is non-jurisdictional or if proper USACE clearances have been obtained in jurisdictional areas or have been previously evaluated by the USACE as part of the permit review of this project. The Contractor is solely responsible for documenting any determinations that their activities do not affect a USACE permit area. Maintain copies of their determinations for review by the Department or any regulatory agency.

Document and coordinate with the USACE, if required, before hauling any excavation from or hauling any embankment to a USACE permit area by either 1 or 2 below:

1. **Restricted Use of Materials for the Previously Evaluated Permit Areas.** Document both the Project Specific Locations (PSL) and their authorization. Maintain copies for review by the Department or any regulatory agency. When an area within the project limits has been evaluated by the USACE as part of the permit process for this project:
   a. Suitable excavation of required material in the areas shown on the plans and cross sections as specified in the Item, "Excavation" is used for permanent or temporary fill (under the Item, "Embankment") within a USACE permit area.
   b. Suitable embankment (under the Item, "Embankment") from within the USACE permit area is used as fill within a USACE evaluated area.
   c. Unsuitable excavation or excess excavation, "Waste" (under the Item, "Excavation"), that is disposed of at a location approved within a USACE evaluated area.

2. **Contractor Materials from Areas Other than Previously Evaluated Areas.** Provide the Department with a copy of USACE coordination or approvals before initiating any activities for an area within the project limits that has not been evaluated by the USACE or for any off right of way locations used for the following, but not limited to, haul roads, equipment staging areas, borrow and disposal sites:
   a. The Item, "Embankment" used for temporary or permanent fill within a USACE permit area.

b. Unsuitable excavation or excess excavation, “Waste” (under the Item, “Excavation”), that is disposed of outside a USACE evaluated area.

The total area disturbed for this project is 17.82 acres. The disturbed area in this project, the project locations in the Contract, and Contractor project specific locations (PSLs) within 1 mile of the project limits for the Contract, will further establish the authorization requirements for storm water discharges. The Department will obtain an authorization to discharge storm water from the Texas Commission on Environmental Quality (TCEQ) for the construction activities shown on the plans. The Contractor is to obtain required authorization from the TCEQ for Contractor PSLs for construction support activities on or off the ROW. When the total area disturbed in the Contract and PSLs within 1 mile of the project limits exceeds 5 acres, provide a copy of the Contractor NOI for PSLs on the ROW to the Engineer (to the appropriate MS4 operator when on an off-state system route) and to the local government that operates a separate storm drain system.

Before bidding on this project, obtain a copy of the complete U.S. Army Corps of Engineers *14* Nationwide at the Area Engineer’s office. Review the permit before bidding on the project and become aware of its conditions.

Place erosion control measures around the perimeter of impacted wetlands as shown in the above mentioned U.S. Army Corps of Engineers Nationwide permits. During staging and construction operations, equipment is not allowed in the Waters of the United States.

Do not place temporary fill in areas determined to be wetlands. This prohibition includes constructing staging areas, temporary fills or other actions that would result in placing fill in wetlands within the right of way, which are not addressed in the plans. The Engineer will coordinate with the Houston District Environmental Section to determine if wetlands are present on this project before placing temporary fill. If wetlands exist, obtain the appropriate permits from the U.S. Army Corps of Engineers.

Avoid encroaching into the wetland areas delineated in the plans. Place erosion control measures around the wetlands as shown on the plans. No construction work or construction equipment is permitted within this delineated area. If applicable for bridge construction, construct drilled shafts outside of this delineated area. Secure approval for the locations of field offices, material storage sites, material disposal sites, plants, borrow pits, etc. in writing before use to ensure that the proposed location is not within Jurisdictional Waters of the United States (wetlands).

Do not store any material in Waters of the United States inside the right of way without written approval.

Before construction operations begin, provide a drawing of the location of proposed temporary access roads, haul roads, or temporary fill used during construction operations to ensure that they are not within Jurisdictional Waters of the United States.

County: Galveston **Control:** 0912-73-215

Highway: Various

If the Contractor elects to use an area not permitted and determined to be within Jurisdictional Waters of the United States during the prosecution of the work, the Contractor will hold the Department harmless for delays caused by procuring the necessary permits from the United States Army Corps of Engineers.

Maintain the roadway slope stability. Maintaining slope stability is subsidiary to the various bid items.

The nesting / breeding season for migratory birds is February 15 through September 30.

Conduct any tree removal outside of the migratory bird nesting season. If this is not possible due to scheduling, then exercise caution to remove only those trees with no active nests. Do not destroy nests on structures or in trees within the project limits during the nesting / breeding season.

Take measures to prevent the building of nests on any structures or trees within the project limits throughout the duration of the construction if work / removal will be performed during the nesting / breeding season. This can be accomplished by application of bird repellent gel, netting by hand every 3 to 4 days, or any other non-threatening method approved by the Houston District Environmental Section. Obtain this approval well in advance of the planned use. Contact the Houston District Environmental Section at 713-802-5244. The cost of this work is subsidiary to the various bid items.

No significant traffic generator events have been identified.

Item 8: Prosecution and Progress

The Department will not adjust the number of days for the project and milestones, if any, due to differences in opinion regarding any assumptions made in the preparation of the schedule or for errors, omissions, or discrepancies found in the time determination schedule.

Working days will be computed and charged based on a *5-day* workweek in accordance with Section 8.3.1.*1.*

Item 100: Preparing Right of Way

Obtain a City of Houston plumbing permit and a demolishing permit or removing permit before demolishing or removing existing houses or commercial buildings.

Clean existing ditches under fill sections of undesirable materials including grass, muck, and trash. Perform this work in accordance with the Construction section of the Item, “Preparing Right of Way.” This work is subsidiary to this bid Item.

County: Galveston **Control:** 0912-73-215

Highway: Various

The Item, “Preparing Right of Way” will be measured for payment only in those designated areas shown on the plans. Preparing right of way necessary to perform construction that is outside designated areas is subsidiary to this bid Item.

Remove abandoned utilities that are in conflict with the new utilities, at no expense to the Department.

Reestablish and maintain right of way stakes after completing the right of way preparation activities and until the new utilities are in place.

Remove and assume ownership of the existing ground mounted signs within the limits of roadway construction unless otherwise noted or directed. This work is subsidiary to the Item, “Preparing Right of Way.”

Item 104: Removing Concrete

Removing concrete curb is paid as a separate bid item if the existing pavement on which it rests is not removed at the same time.

Item 105: Removing Treated and Untreated Base and Asphalt Pavement

Removing curb on cement-treated and untreated base or on cement treatment being removed at the same time is subsidiary to this bid Item.

Obtain a secured site for the stockpile of the treated material to be salvaged from this project. Haul and stockpile the unused material as directed. This work is subsidiary to this bid Item.

Store the treated material salvaged from this project at the project sites designated by the Engineer.

Item 110: Excavation

If manipulating the excavated material requires moving the same material more than once to accomplish the desired results, the excavation is measured and paid for only once regardless of the manipulation required.

Transition the ditch grades and channel bottom widths at structure locations. Use only approved channel excavation in the embankment.

Item 132: Embankment

If salvaged base is used for the embankment material, break it into small pieces to achieve the required density and to facilitate placing in the embankment. Obtain approval of the material before placing in the embankment.

County: Galveston **Control:** 0912-73-215

Highway: Various

Furnish Type C material with a maximum Liquid Limit (LL) of 65, a minimum Plasticity Index (PI) of 5, and composed of suitable earth material such as loam, clay, or other materials that form a suitable embankment.

The embankment material used on the project which has a Liquid Limit exceeding 45 will be tested for Liquid Limits at the rate of one test per 20,000 cu. yd. or per total quantity less than 20,000 cu. yd., unless otherwise directed. Only use material that passes the above tests.

For unpaved areas, provide a finished grade with the top 4 in. capable of sustaining vegetation. Use fertile soil that is easily cultivated, free from objectionable material and highly resistant to erosion.

Item 162: Sodding for Erosion Control

Item 164: Seeding for Erosion Control

Item 166: Fertilizer

Item 168: Vegetative Watering

Refer to the “Fertilizer, Seed, Sod, Straw, Compost, and Water” plan sheet for material specifications, application rates, and for watering requirements.

Item 260: Lime Treatment (Road-Mixed)

For slurry placing, before discharging through the distributors, sufficiently agitate or mix the lime and water to place the lime in suspension and to obtain a uniform mixture.

The Engineer will observe the lime treatment that the Contractor elects to open to construction traffic immediately after compaction. If the construction traffic damages the subgrade, route the traffic off the damaged section in accordance with the standard specification. If the construction traffic does not damage the subgrade, cure the subgrade until other courses of material cover it. Apply these courses within 14 days with a maximum curing period of 7 days.

Place the hydrated and the commercial lime as a water suspension or slurry according to the slurry placing method shown in Section 260.4.3.2, “Slurry Placement.”

Use the type of lime at particular locations as directed.

Place the quicklime dry or as a slurry.

For the dry quicklime, a spreader box is not required if the lime material is evenly distributed.

In limited areas, the Contractor may construct the lime slurry subgrade under a sequence of work in which the application, mixing, and compaction are completed in the same working day, if approved by the Engineer.

Provide documentation from certified public scales showing gross, tare, and net weights. Provide producer's delivery tickets also showing gross, tare, and net weights. Completely empty the lime trailers at the project site. The Engineer may direct the Contractor to reweigh any shipment of lime on certified scales. The cost of this operation is subsidiary to the Item, "Lime Treatment (Road-Mixed)."

The percentage of lime shown on the plans is estimated on the basis of engineering tests. If soil tests made during construction indicate properties different than those originally anticipated, the Engineer may vary the percentage of the lime to provide soil characteristics similar to those of the preliminary tests.

Mix the lime with the new base material in an approved pug mill type stationary mixer.

Item 276: Cement Treatment (Plant-Mixed)

Before placing the new base, wet and coat the vertical construction joints between the new base and the previously placed base with dry cement.

If the total thickness of the cement treatment is greater than 8 in., compact it in multiple lifts in accordance with Section 276.4.3, "Compaction." Place the courses in the same working day unless otherwise approved.

Use Class N Cement Treatment containing 4.5 percent cement based on the dry weight of the aggregate. There is no minimum compressive strength requirement for this Item.

The requirement for core drilling to determine the thickness of cement treatment is waived if using less than 500 sq. yd. at one location.

For widening the existing pavement, the Engineer may waive the requirements for preparing the subgrade by scarifying and compacting if the as-cut subgrade can be maintained to the density of the natural ground and to a uniform consistency when placing the base course. Keep the subgrade wet.

Compact in accordance with the standard specifications and complete the finishing operations within a period of 5 hours after adding the cement to the base material.

Cure the final course of cement treatment using an asphalt distributor that distributes the approved curing material and water mixture material at a rate of 0.25 gallons per square-yard evenly and smoothly or as recommended by the manufacturer at the recommended dilution rate, under a pressure necessary for proper distribution. Provide a curing material meeting the requirements of the Item, "Asphalts, Oils, and Emulsions" for curing the cement treatment. Use the following materials for curing the courses of cement treatment:

Curing Material	**Application**
Water	All courses, except final course
PCE	Final course

Continue curing until placing another course or opening the finished section to traffic.

Spread the material so that the layers of base are uniform in depth and in loose density before compacting.

Type E material consists of Type A material, crushed concrete (except under flexible pavement), or Reclaimed Asphalt Pavement (RAP) meeting the requirements of the Item, "Flexible Base." If approved, the 50 percent maximum RAP limitation may be waived.

Unless otherwise directed, place the next pavement layer within 7 working days of placing the base.

If using crushed stone for the Type E material under this Item, ensure it meets the requirements for the Item, "Flexible Base," Type A, Grade 1-2. Texas Test Method TEX-117-E is not required for this Item.

If using Recycled Type E cement treatment under proposed flexible pavement, produce it using the existing base salvaged from within this project or from other approved Department projects and salvaged asphalt concrete pavement. Do not use crushed concrete under flexible pavement.

If using Recycled Type E cement treatment under proposed concrete pavement, produce it using the existing base salvaged from within this project or from other approved Department projects, salvaged asphalt concrete pavement, or crushed concrete. If using crushed concrete as an aggregate, meet the requirements of Grade 3.

If using salvaged existing base and asphalt concrete pavement as described above, size it so that all the material, except the existing individual aggregate, passes the 2-in. sieve and is of a gradation that allows satisfactory compaction. Provide salvaged material that does not contain deleterious material such as clay or organic material. Provide material passing the No. 40 sieve,

defined as soil binder, with a maximum Plasticity Index of 10 and a maximum Liquid Limit of 35 when tested in accordance with test method TEX-106-E.

Meet the following additional requirements if the base and ACP are salvaged from other Department projects:

1. Obtain written approval before using the material.
2. Salvage and stockpile by approved methods.
3. Stockpile the material for exclusive use by the Department.

County: Galveston **Control:** 0912-73-215

Highway: Various

Item 316: Seal Coat

The asphalt application rate shown on the "Basis of Estimate" is an average rate for calculating asphalt quantities. Vary the rate based on the pavement conditions and other factors such as the type and grade of aggregate used, weather, and traffic.

Allowable Asphalt Cements based on Average Daily Traffic (ADT) are shown below:

For ADT greater than 5000	ADT 1000 to 5000	ADT less than 1000
AC-20 XP	AC-15P	AC-10-2TR
AC-20-5TR	AC-20-5TR	AC-10 w/2% SBR
	AC-20-XP	AC-15P
	AC-10-2TR	

Item 334: Hot-Mix Cold-Laid Asphalt Concrete Pavement

Place the cold-mix limestone rock asphalt pavement with a motor grader.

Taper the asphalt concrete pavement at the beginning and ending points.

Item 400: Excavation and Backfill for Structures

Plugging existing pipe culverts is subsidiary to the various bid items.

If Recycled Cement Treatment (Type D) is included in the plans, the following additional requirements apply:

1. Use only approved sand, crushed concrete, or salvaged base free from deleterious matter, as aggregate for cement-stabilized backfill.
2. Provide crushed concrete or salvaged base backfill material in accordance with the Item, "Cement Treatment (Plant-Mixed) (Type D)" (base or crushed concrete), except the recycled Type D material must not contain Reclaimed Asphalt Pavement (RAP).
3. For backfill material below the spring line of pipes, use cement-stabilized sand rather than Recycled Type D backfill material.
4. For the cement-stabilized sand backfill, use a minimum of 7 percent of hydraulic cement based on the dry weight of backfill material. The cement content for the crushed concrete and salvaged base is specified in the Item, "Cement Treatment (Plant-Mixed) (Type D)."
5. Place and compact the stabilized backfill material using a gradation that provides a dense mass without segregating and is impervious to passing of water.

County: Galveston **Control:** 0912-73-215

Highway: Various

Item 432: Riprap

Item 462: Concrete Box Culverts and Drains

Item 464: Reinforced Concrete Pipe

Concrete collars are subsidiary to the various bid items except for those specified on the plans for stage construction, which are paid for under the Item, "Concrete Substructures" as "Cl C Conc (Collar)."

Rubber gaskets are required for concrete pipe joints except for connections of safety end treatments, driveway culverts, and joints between the existing pipes and extensions.

Open, install, and backfill each section, or a portion of a section, in the same day at locations requiring pipe culverts under existing roadways.

Place the pipe drains across existing roadways half at a time to allow passage of traffic. No trenches may remain open overnight.

Known locations of existing stub-outs are shown on the plans, but these stub-outs may be in a different position or condition. Delays, inconveniences, or additional work required will not be a basis for additional compensation.

Provide leave-outs or holes in the proposed storm drain structures and pipes for drainage during interim construction. This work is subsidiary to the various bid items.

The flowline elevations of side road structures are based on the proposed ditches. Field-verify these elevations and adjust them as necessary to meet the field conditions. Before placing these structures, prepare and submit for approval, the data (revised elevation, alignment, length, etc.) for the adjusted structures.

If groundwater is encountered while installing the storm drain system, install a suitable dewatering system to facilitate construction of the storm drains. The costs for materials and labor required to install and maintain this system are subsidiary to the Item, "Reinforced Concrete Pipe."

Item 465: Junction Boxes, Manholes, and Inlets

If required on the plans, build manholes and inlets to stage 1 construction, cover with temporary pavement, and complete in a later phase of construction. This temporary covering and pavement are subsidiary to the various bid items.

Construct manholes and inlets in graded areas, first to an elevation at least 4 in. above the top of the highest entering pipe and cover with a wooden cover. Complete the construction of such manholes and inlets to the finished elevation when completing the grading work for such manholes and inlets. Adjust the final elevation, if required, since this elevation is approximate.

Construct manholes and inlets in paved areas to an elevation so their temporary wooden covers are flush with the surface of the base material.

Do not leave excavations or trenches open overnight.

Items 496: Removing Structures

Item 502: Barricades, Signs, and Traffic Handling

Use a traffic control plan for handling traffic through the various phases of construction. Follow the phasing sequence unless otherwise agreed upon by the Area Engineer and the Project Manager. Ensure this plan conforms to the latest "Texas Manual on Uniform Traffic Control Devices" and the latest Barricade and Construction (BC) Standard Sheets. The latest versions of Work Zone Standard Sheets WZ (BTS-1) and WZ (BTS-2) are the traffic control plan for the signal installations.

Submit changes to the traffic control plan to the Area Engineer. Provide a layout showing the construction phasing, signs, striping, and signalizations for changes to the original traffic control plan.

Furnish and maintain the barricades and warning signs, including the necessary temporary and portable traffic control devices, during the various phases of construction. Place and construct these barricades and warning signs in accordance with the latest "Texas Manual on Uniform Traffic Control Devices" for typical construction layouts.

Cover work zone signs when work related to the signs is not in progress, or when any hazard related to the signs no longer exists.

Keep the delineation devices, signs, and pavement markings clean. This work is subsidiary to the Item, "Barricades, Signs, and Traffic Handling."

If a section is not complete before the end of the workday, pull back the base material to the existing pavement edge on a 6H: 1V slope. Edge drop-offs during the hours of darkness are not permitted.

Before detouring traffic onto the mainlane shoulders, remove dirt, debris, vegetation, and other deleterious material from the surface of the shoulders. Appropriately sign the detour in an approved manner. This work is subsidiary to the various bid items.

Coordinate and schedule the work with the appropriate Metro representative if requiring access to the High Occupancy Vehicle lanes.

Cover or remove the permanent signs and construction signs that are incorrect or that do not apply to the current situation for a particular phase.

Replace the overhead signs, informational signs, and exit signs to be removed, with temporary signs providing the correct information to the traveling public. Size the replacement signs and include them in the traffic control plan.

Do not mount signs on drums or barricades, except those listed in the latest Barricades and Construction standard sheets.

Use traffic cones for daytime work only. Replace the cones with plastic drums during nighttime hours.
Place positive barriers to protect drop-off conditions greater than 2 ft. within the clear zone that remain overnight.

The Contractor Force Account "Safety Contingency" that has been established for this project is intended to be utilized for work zone enhancements, to improve the effectiveness of the Traffic Control Plan, that could not be foreseen in the project planning and design stage. These enhancements will be mutually agreed upon by the Engineer and the Contractor's Responsible Person based on weekly or more frequent traffic management reviews on the project. The Engineer may choose to use existing bid items if it does not slow the implementation of enhancement.

Item 506: Temporary Erosion, Sedimentation and Environmental Controls

A Storm Water Pollution Prevention Plan (SWP3) is required. Since the disturbed area is more than 5 acres, a "Notice of Intent" (NOI) is also required.

Use appropriate measures to prevent, minimize, and control the spill of hazardous materials in the construction staging area. Remove and dispose of materials in compliance with State and Federal laws.

Before starting construction, review with the Engineer the SWP3 used for temporary erosion control as outlined on the plans. Before construction, place the temporary erosion and sedimentation control features as shown on the SWP3.

Schedule the seeding or sodding work as soon as possible. The project schedule provides for a vegetation management plan.

After completing earthwork operations, restore and reseed the disturbed areas in accordance with the Department's specifications for permanent or temporary erosion control.

Implement temporary and permanent erosion control measures to comply with the National Pollution Discharge Elimination System (NPDES) general permit under the Clean Water Act.

Before starting grading operations and during the project duration, place the temporary or permanent erosion control measures to prevent sediment from leaving the right of way.

Item 529: Concrete Curb, Gutter, and Combined Curb and Gutter

Item 530: Intersections, Driveways, and Turnouts

Item 531: Sidewalks

An air-entraining admixture is not required.

For concrete curbs, use Grade 7 aggregate conforming to Section 421.2.6 of the Item, "Hydraulic Cement Concrete."

For driveways and turnouts, coarse aggregate Grade No. 3 through No. 8 conforming to the gradation requirements specified in the Item, "Hydraulic Cement Concrete" will be permitted.

For reinforcing steel in sidewalks and pedestrian ramps, use No. 4 bars at a maximum 18 in. spacing center-to-center in both directions.

Item 540: Metal Beam Guard Fence

Painting the timber posts is not required.

Use timber posts for galvanized steel metal beam guard fence, except for anchorage at turned down ends.

Furnish and install wood blocks between the rail elements and the timber posts as detailed on the plans. These block-outs are subsidiary to this bid Item.

The quantity of the metal beam guard fence is subject to change.

Provide a mow strip as shown on the plans, at metal beam guard fence locations, including any guardrail end treatments.

Galvanize the rail elements supplied for this project by using a Type II Zinc Coating.

At locations requiring attachment of Metal Beam Guard Fence (MBGF) to concrete railing or concrete traffic barrier, repair and fill any existing holes in the railing or barrier that are not in the correct location for attaching the new MBGF. Perform this work in accordance with the Item, "Concrete Structure Repair." Existing anchor bolt holes that cannot be utilized must be filled with an epoxy grout before drilling new holes. Then core-drill new holes in the correct locations and repair any resulting spalls at no expense to the Department. This work is considered subsidiary to the MBGF transition section (Item 540).

Item 618: Conduit

When backfilling bore pits, ensure that the conduit is not damaged during installation or due to settling backfill material. Compact select backfill in 3 equal lifts to the bottom of the conduit; or

if using sand, place it 2 in. above the conduit. Ensure backfill density is equal to that of the existing soil. Prevent material from entering the conduit.

Construct bore pits a minimum of 5 ft. from the edge of the base or pavement. Close the bore pit holes overnight.

Unless otherwise shown on the plans, install underground conduit a minimum of 24 in. deep. Install the conduit in accordance with the latest National Electrical Code (NEC) and applicable Department standard sheets. Place conduit under driveways or roadways a minimum of 24 in. below the pavement surface.

If using casing to place bored conduit, the casing is subsidiary to the conduit.

Item 620: Electrical Conductors

Test each wire of each cable or conductor after installation. Incomplete circuits or damage to the wire or the cable are cause for immediate rejection of the entire cable being tested. Remove and replace the entire cable at no expense to the Department. Also test the replacement cable after installation.

When pulling cables or conductors through the conduit, do not exceed the manufacturer's recommended pulling tensions. Lubricate the cables or conductors with a lubricant recommended by the cable manufacturer.

For both transformer and shoe-base type illumination poles, provide double-pole breakaway fuse holders as shown on the Department's Construction Division (CST) material producers list. Check the latest link on the Department's website for this list. The category is "Roadway Illumination and Electrical Supplies." The fuse holder is shown on the list under Items 610 and 620. Provide 10 Amp time delay fuses.

Ensure that circuits test clear of faults, grounds, and open circuits.

Split bolt connectors are allowed only for splices on the grounding conductors.

For Roadside Flashing Beacon Assemblies (Item 685) and Pedestal Pole Assemblies (Item 687) within the project, provide single-pole breakaway disconnects as shown on the Construction Division (CST) material producers list. Check the latest link on the Department's website for this list. The category is "Roadway Illumination and Electrical Supplies." The fuse holder is shown on the list under Item 685. For underground (hot) conductors, install a breakaway connector with a dummy fuse (slug). Provide dummy fuse (slug). For grounded (neutral) conductors, install a breakaway connector with a white colored marking and a permanently installed dummy fuse (slug).

For electrical licensing and electrical certification requirements for this project, see Item 7 of the Standard Specifications and any applicable special provisions to Item 7.

Item 644: Small Roadside Sign Assemblies

Sign locations shown on the plans are approximate. Before placing them, obtain approval of and then stake the exact locations for these signs.

Use the Texas Universal Triangular Slip Base with the concrete foundation for small ground mounted signs, unless otherwise shown in the plans.

Remove existing street name signs from existing stop signs and re-install them above the new stop signs. Removing and re-installing existing street name signs is subsidiary to the Item, "Small Roadside Sign Assemblies."

When design details are not shown on the plans, provide signs and arrows conforming to the latest "Standard Highway Sign Designs for Texas" manual.

Use Type E Super High Specific Intensity (Fluorescent Prismatic) yellow green reflective sheeting background to fabricate school signs (S1-1, S3-1, S4-3, S5-1, W16-2, SW16-9p, and SW16-7pL(R)).

Assume ownership of the removed existing signposts. Store removed sign panels at the Contractor's field office, to be picked up by the maintenance office. This work is subsidiary to this item.

Locations of the relocated signs are approximate. Before placing them, obtain approval of and then stake the exact locations for these signs.
Replace existing signs that become damaged during relocation at no expense to the Department.

Item 666: Reflectorized Pavement Markings

Item 672: Raised Pavement Markers

If other operations are complete on the project and if the curing time period is not yet elapsed, the contract time will be suspended until the curing is done.

Before placing the raised pavement markers on concrete pavement, blast clean the surface using an abrasive-blasting medium. This work is subsidiary to the Item, "Raised Pavement Markers."

Provide epoxy adhesive that is machine-mixed or nozzle-mixed and dispensed. Equip the machine or nozzle with a mechanism to ensure positive mix measurement control.

Item 677: Eliminating Existing Pavement Markings and Markers

Remove existing pavement markings on concrete or asphalt surfaces by flail milling or as directed.

Item 678: Pavement Surface Preparation for Markings

County: Galveston **Control:** 0912-73-215

Highway: Various

Do not blast clean asphalt concrete pavement. Clean asphalt concrete pavement as required under the applicable specifications or as directed.

On new concrete pavement or on existing concrete pavement when placing a new stripe on a new location, remove the curing compounds and contamination from the pavement surface by flail milling or as directed. In addition, air-blast the surface with compressed air just before placing the new stripe.

On existing concrete pavement when placing a new stripe on an existing location, after removing the existing stripe under the Item, "Eliminating Existing Pavement Markings and Markers," air-blast the surface with compressed air just before placing the new stripe.

Do not clean concrete pavement by grinding.

Item 680: Highway Traffic Signals

Clearly mark or highlight on the shop drawings the items being furnished for this project.

Furnish labor, tools, equipment, and materials as shown on the plans and specifications for a complete and operating signal installation.

Furnish the type of controller cabinet specified on the plans. Refer to the table shown in the Departmental Material Specifications (DMS-11170, Fully Actuated, Solid-State Traffic Signal Controller Assembly), Section 11170.6.A, Type 2 cabinet, page 4 of 39, regarding the size of the cabinet, back panel configuration, and the size of the load bay. Use the following website to view this specification:

https://www.txdot.gov/business/resources/materials/material-specifications.html

Complete traffic signal construction work, including correcting discrepancies shown on the Department inspector's "Traffic Signal Installation Inspection Report" before the beginning of the test period.

Provide a full-time qualified traffic signal technician responsible for installing, maintaining, or replacing traffic signal devices.

Staking in the field is subject to approval.

Adjust project construction, if needed, due to conflicts with underground utilities.

Do not aim the luminaire arms mounted on traffic signal poles into the intersection. Aim each arm perpendicular to the centerline of the roadway it is intended to cover, to develop the proper illumination pattern for the intersection.
Allow the electrical work to is be inspected by the City. Complying with the provisions and requirements of the City electrical ordinance is not required. Such inspection does not make the City a party to this contract.

Provide continuous conductors without splices from signal controller to signal heads. Route the conductors for luminaires to the service enclosure. Splices or attachments to the terminal block in the access compartment of the mast arm pole are not permitted except for the luminaire cable.

Abrasions to the conductor insulation caused while pulling cable for the traffic signal system are cause for immediate rejection. Remove and replace the entire damaged cable at no expense to the Department.

When pulling cables or conductors through conduit, do not exceed the manufacturer's recommended pulling tensions. Lubricate the cables or conductors with a lubricant as recommended by the cable manufacturer.

Bond the controller housing, signal poles, conduit, and spans to a minimum No. 6 AWG stranded copper conductor. An equipment grounding conductor is required in every conduit to form a continuous grounding system. Effectively connect the grounding system to ground rods or concrete encased grounding electrodes as indicated in the plans.

Wrap signal heads with dark plastic or suitable material to conceal the signal faces from the time of installation until placing into operation. Do not use burlap.

Furnish signal heads from the same manufacturer.

Use Type B (high intensity prismatic) or Type D (diamond grade) retroreflective sheeting for signs mounted under or adjacent to the signal heads.

Furnish and attach compression type connectors. Install the connectors with a compression mechanical release hand-crimping tool to each individual conductor before making connections to the terminal strips.

The Contractor may use ready mix concrete.

Apply membrane curing on concrete work in accordance with Section 420.4.10.3, "Membrane Curing."

The standard 4.5-in. galvanized pipe type poles, except the breakaway type, are subject only to the Engineer's inspection for their acceptance. Mill test reports or documentation will not be required.

Item 682: Vehicle and Pedestrian Signal Heads

Install two set screws on vehicle signal head mounting hardware fittings.

Furnish black housings for vehicle and pedestrian signals. Furnish black vehicle signal head back plates with 2 in. retroreflective yellow borders.

Furnish black housings for vehicle and pedestrian signals. Ensure the door and visor match the mast arm and pedestrian pole color. Furnish black vehicle signal head back plates with 2 in. retroreflective yellow borders.

Item 685: Roadside Flashing Beacon Assemblies

When shown on the plans, provide solar powered flasher controller assemblies in accordance with Departmental Material Specifications DMS-11150, "Solar Power Flasher Controller Assembly."

When solar powered school zone signs are shown on the plans, provide solar powered flasher controller assemblies capable of 24-hour operations.

Item 686: Traffic Signal Pole Assemblies (Steel)

For a steel mast arm or steel strain pole assembly, hold the anchor bolts and conduits rigidly in place with a welded steel template.

Leave a minimum of one full diameter thread exposed on each anchor bolt securing a signal pole.

Set the anchor bolts for the steel strain poles so that two are in compression and two are in tension.

Use a Texas Cone Penetrometer reading of 10. The drilled shaft length is from the surface elevation to the bottom of the drilled shaft. Provide an additional length of the pole foundation from the surface level to the roadway level, if required for unusual locations. Provide the drilled shaft depth regardless of the length of the pole foundation. The pole foundation depth from the surface level to the roadway level is a maximum of 4 ft., or as approved.

Locate traffic signal pole assembly foundations a minimum of 4 ft. from the roadway curb or pavement edge, or as shown on the plans.

Place steel strain poles at a 10 ft. desirable minimum distance from the roadway curb or pavement edge.

After the traffic signal pole assembly is plumb and the nuts are tight, tack-weld each anchor bolt nut in two places to its washer. Tack-weld each washer to the base plate in two places. Do not weld components to the bolt. Perform tack-welding in accordance with the Item, "Steel Structures." After tack-welding, repair galvanizing damage on bolts, nuts, and washers in accordance with Section 445.3.5, "Repairs."

The Department may test the anchor bolts using ultrasonic methods for traffic signal poles after they are installed. Replace faulty anchor bolts as directed. Do not weld the anchor bolts.

Furnish black powder coated traffic signal poles. Apply powder coated finish over the galvanized surface. Prepare galvanized surfaces for powder coating in accordance with the powder coating manufacturer's recommendations. Do not water-quench or chromate-quench galvanized surfaces to be powder coated. After preparing galvanized surfaces, powder coat with a minimum of 2.0 mils dry film thickness (DFT) of urethane powder or triglycidyl isocyanurate (TGIC) polyester powder. Provide powder coat adhesion meeting the 5A or 5B classifications of ASTM D3359. Ensure powder coating is uniform in appearance and free of scratches.

Item 687: Pedestal Pole Assemblies

Furnish black powder coated traffic signal poles. Apply powder coated finish over the galvanized surface. Prepare galvanized surfaces for powder coating in accordance with the powder coating manufacturer's recommendations. Do not water-quench or chromate-quench galvanized surfaces to be powder coated. After preparing galvanized surfaces, powder coat with a minimum of 2.0 mils dry film thickness (DFT) of urethane powder or triglycidyl isocyanurate (TGIC) polyester powder. Provide powder coat adhesion meeting the 5A or 5B classifications of ASTM D3359. Ensure powder coating is uniform in appearance and free of scratches.

Item 688: Pedestrian Detectors and Vehicle Loop Detectors

Provide pedestrian push buttons a minimum of 2 in. diameter in the smallest dimension.

Install a rubber grommet or bushing between the push button assembly and the signal pole to protect the conductors.

Provide a black tube loop detector wire as specified in the "International Municipal Signal Association, Inc." (IMSA) Specifications.

At intersections where a minimum of 10 ft. spacing between adjacent accessible pedestrian signal units is not possible, provide each accessible pedestrian pushbutton with the following features: a pushbutton locator tone, a tactile arrow, a speech walk message for the walking person indication and a speech pushbutton information message.

Provide pedestrian push buttons a minimum of 2 in. diameter in the smallest dimension.

Install a rubber grommet or bushing between the push button assembly and the signal pole to protect the conductors.

Item 6185: Truck Mounted Attenuator (TMA) and Trailer Attenuator (TA)

A shadow vehicle with Truck Mounted Attenuators (TMAs) or Trailer Attenuators (TAs) is required as shown on the appropriate Traffic Control Plan (TCP) sheets. TMAs/TAs must meet the requirements of the Compliant Work Zone Traffic Control Device List.

Level 3 Compliant TMAs/TAs are required for this project.

A total of one (1) shadow vehicle with a TMA/TA is required for the work with the exception of Pavement Marking Operations. The Contractor is responsible for determining if one or more of these operations will be ongoing at the same time to determine the total number of TMAs/TAs needed on the project.

A total of three (3) shadow vehicles with a TMA/TA are required for Pavement Marking Operations. The Contractor is responsible for determining if one or more of these operations will be ongoing at the same time to determine the total number of TMAs/TAs needed on the project.

Basis of Estimate

Item	Description	Limit and Rate	Unit
260	Lime Treatment (Road-Mixed) For materials used as subgrade * • Lime(HYD, COM, or QK)(SLRY) or QK(DRY)	 6 % by weight based on 100 Lb. / Cu. Ft. subgrade	SY TON
316	Seal Coat • Asphalt • Aggregate (Gr 4) A-R Binder • Asphalt • Aggregate (Gr 4)	 0.32 Gal. / Sq. Yd. 1/130 Cu. Yd. / Sq. Yd. 0.42 Gal. / Sq. Yd. 1/130 Cu. Yd. / Sq. Yd.	 GAL CY GAL CY

* If used in existing roadway base, rate will be determined on a case-by-case basis.

Estimate & Quantity Sheet

CONTROLLING PROJECT ID 0912-73-215 **DISTRICT** Houston **COUNTY** Galveston
HIGHWAY Various

			CONTROL SECTION JOB		**0912-73-215**	TOTAL EST.	TOTAL FINAL
			PROJECT ID		**A00124705**		
			COUNTY		**Galveston**		
			HIGHWAY		**Various**		
ALT	**BID CODE**	**DESCRIPTION**	**UNIT**	EST.	FINAL		
	100-6002	PREPARING ROW	STA	312.000		312.000	
	104-6011	REMOVING CONC (MEDIANS)	SY	95.000		95.000	
	104-6015	REMOVING CONC (SIDEWALKS)	SY	2,224.000		2,224.000	
	104-6017	REMOVING CONC (DRIVEWAYS)	SY	3,672.000		3,672.000	
	104-6021	REMOVING CONC (CURB)	LF	895.000		895.000	
	105-6059	REMOVING STAB BASE & ASPH PAV(13"-18")	SY	2,808.000		2,808.000	
	110-6001	EXCAVATION (ROADWAY)	CY	5,941.000		5,941.000	
	132-6005	EMBANKMENT (FINAL)(ORD COMP)(TY C)	CY	4,144.000		4,144.000	
	162-6002	BLOCK SODDING	SY	41,827.000		41,827.000	
	162-6003	STRAW OR HAY MULCH	SY	41,827.000		41,827.000	
	164-6009	BROADCAST SEED (TEMP) (WARM)	SY	41,827.000		41,827.000	
	166-6002	FERTILIZER	TON	17.280		17.280	
	168-6001	VEGETATIVE WATERING	MG	2,076.000		2,076.000	
	260-6012	LIME(HYD,COM OR QK)(SLRY)OR QK(DRY)	TON	405.000		405.000	
	260-6079	LIME TRT (SUBGRADE)(6")	SY	29,968.000		29,968.000	
	276-6232	CEM TRT(PLNT MX) (CLN)(TYA)(GR1-2)(12")	SY	8,440.000		8,440.000	
	316-6126	AGGR(TY-PB GR-4 SAC-A)	CY	69.000		69.000	
	316-6405	ASPH (AC-20-5TR OR AC-20XP)	GAL	2,701.000		2,701.000	
	334-6080	HMCL ACP TY-D AC-1.5	TON	1,209.000		1,209.000	
	432-6001	RIPRAP (CONC)(4 IN)	CY	1.000		1.000	
	432-6045	RIPRAP (MOW STRIP)(4 IN)	CY	13.000		13.000	
	450-6052	RAIL (HANDRAIL)(TY F)	LF	682.000		682.000	
	462-6003	CONC BOX CULV (4 FT X 2 FT)	LF	288.000		288.000	
	462-6006	CONC BOX CULV (5 FT X 2 FT)	LF	788.000		788.000	
	462-6021	CONC BOX CULV (8 FT X 6 FT)	LF	76.000		76.000	
	464-6005	RC PIPE (CL III)(24 IN)	LF	826.000		826.000	
	464-6007	RC PIPE (CL III)(30 IN)	LF	364.000		364.000	
	464-6010	RC PIPE (CL III)(48 IN)	LF	134.000		134.000	
	464-6033	RC PIPE (ARCH)(CL III)(DES 4)	LF	35.000		35.000	
	465-6168	INLET (COMPL)(TY A)	EA	11.000		11.000	
	465-6225	JCT BOX (COMPL)(SPL)	EA	2.000		2.000	
	466-6154	WINGWALL (FW - 0) (HW=7 FT)	EA	2.000		2.000	
	467-6139	SET (TY I)(S= 4 FT)(HW= 3 FT)(4:1) (C)	EA	2.000		2.000	
	467-6166	SET (TY I)(S= 5 FT)(HW= 2 FT)(4:1) (C)	EA	5.000		5.000	
	467-6391	SET (TY II) (24 IN) (RCP) (4: 1) (P)	EA	17.000		17.000	
	467-6420	SET (TY II) (30 IN) (RCP) (4: 1) (P)	EA	4.000		4.000	
	467-6469	SET (TY II) (48 IN) (CMP) (4: 1) (P)	EA	6.000		6.000	

Estimate & Quantity Sheet

CONTROLLING PROJECT ID 0912-73-215 **DISTRICT** Houston **COUNTY** Galveston
HIGHWAY Various

			CONTROL SECTION JOB		**0912-73-215**	TOTAL EST.	TOTAL FINAL
			PROJECT ID		**A00124705**		
			COUNTY		**Galveston**		
			HIGHWAY		**Various**		
ALT	**BID CODE**	**DESCRIPTION**	**UNIT**	EST.	FINAL		
	467-6548	SET (TY II) (DES 4) (CMP) (4: 1) (P)	EA	2.000		2.000	
	479-6001	ADJUSTING MANHOLES	EA	3.000		3.000	
	479-6002	ADJUSTING INLETS	EA	3.000		3.000	
	479-6006	ADJUSTING INLET (CAP)	EA	7.000		7.000	
	496-6004	REMOV STR (SET)	EA	34.000		34.000	
	496-6050	REMOV STR (DRIVEWAY CULVERT)	EA	12.000		12.000	
	500-6001	MOBILIZATION	LS	1.000		1.000	
	502-6001	BARRICADES, SIGNS AND TRAFFIC HANDLING	MO	15.000		15.000	
	506-6001	ROCK FILTER DAMS (INSTALL) (TY 1)	LF	860.000		860.000	
	506-6002	ROCK FILTER DAMS (INSTALL) (TY 2)	LF	230.000		230.000	
	506-6011	ROCK FILTER DAMS (REMOVE)	LF	1,090.000		1,090.000	
	506-6020	CONSTRUCTION EXITS (INSTALL) (TY 1)	SY	1,560.000		1,560.000	
	506-6022	CONSTRUCTION EXITS (INSTALL) (TY 3)	SY	10,145.000		10,145.000	
	506-6024	CONSTRUCTION EXITS (REMOVE)	SY	11,705.000		11,705.000	
	506-6038	TEMP SEDMT CONT FENCE (INSTALL)	LF	12,720.000		12,720.000	
	506-6039	TEMP SEDMT CONT FENCE (REMOVE)	LF	12,720.000		12,720.000	
	506-6041	BIODEG EROSN CONT LOGS (INSTL) (12")	LF	360.000		360.000	
	506-6043	BIODEG EROSN CONT LOGS (REMOVE)	LF	360.000		360.000	
	529-6011	CONC CURB (DOWEL)	LF	655.000		655.000	
	529-6015	CONC CURB (TY C1)	LF	1,271.000		1,271.000	
	530-6004	DRIVEWAYS (CONC)	SY	1,149.000		1,149.000	
	530-6005	DRIVEWAYS (ACP)	SY	2,313.000		2,313.000	
	531-6003	CONC SIDEWALKS (6")	SY	17,411.000		17,411.000	
	531-6004	CURB RAMPS (TY 1)	EA	9.000		9.000	
	531-6008	CURB RAMPS (TY 5)	EA	2.000		2.000	
	531-6010	CURB RAMPS (TY 7)	EA	10.000		10.000	
	531-6015	CURB RAMPS (TY 20)	EA	6.000		6.000	
	531-6016	CURB RAMPS (TY 21)	EA	1.000		1.000	
	531-6017	CURB RAMPS (TY 22)	EA	6.000		6.000	
	536-6002	CONC MEDIAN	SY	93.000		93.000	
	540-6002	MTL W-BEAM GD FEN (STEEL POST)	LF	228.000		228.000	
	540-6016	DOWNSTREAM ANCHOR TERMINAL SECTION	EA	1.000		1.000	
	544-6001	GUARDRAIL END TREATMENT (INSTALL)	EA	1.000		1.000	
	618-6046	CONDT (PVC) (SCH 80) (2")	LF	95.000		95.000	
	620-6009	ELEC CONDR (NO.6) BARE	LF	110.000		110.000	
	644-6001	IN SM RD SN SUP&AM TY10BWG(1)SA(P)	EA	29.000		29.000	
	644-6004	IN SM RD SN SUP&AM TY10BWG(1)SA(T)	EA	1.000		1.000	

Estimate & Quantity Sheet

CONTROLLING PROJECT ID 0912-73-215 **DISTRICT** Houston **COUNTY** Galveston
HIGHWAY Various

			CONTROL SECTION JOB		**0912-73-215**	TOTAL EST.	TOTAL FINAL
			PROJECT ID		**A00124705**		
			COUNTY		**Galveston**		
			HIGHWAY		**Various**		
ALT	**BID CODE**	**DESCRIPTION**	**UNIT**	EST.	FINAL		
	644-6068	RELOCATE SM RD SN SUP&AM TY 10BWG	EA	22.000		22.000	
	644-6076	REMOVE SM RD SN SUP&AM	EA	3.000		3.000	
	666-6036	REFL PAV MRK TY I (W)8"(SLD)(100MIL)	LF	386.000		386.000	
	666-6048	REFL PAV MRK TY I (W)24"(SLD)(100MIL)	LF	3,067.000		3,067.000	
	666-6078	REFL PAV MRK TY I (W)(WORD)(100MIL)	EA	1.000		1.000	
	666-6309	RE PM W/RET REQ TY I (W)6"(SLD)(100MIL)	LF	20,860.000		20,860.000	
	666-6318	RE PM W/RET REQ TY I (Y)6"(BRK)(100MIL)	LF	4,110.000		4,110.000	
	666-6321	RE PM W/RET REQ TY I (Y)6"(SLD)(100MIL)	LF	1,436.000		1,436.000	
	672-6007	REFL PAV MRKR TY I-C	EA	20.000		20.000	
	677-6001	ELIM EXT PAV MRK & MRKS (4")	LF	134.000		134.000	
	677-6003	ELIM EXT PAV MRK & MRKS (8")	LF	475.000		475.000	
	677-6005	ELIM EXT PAV MRK & MRKS (12")	LF	5,141.000		5,141.000	
	677-6007	ELIM EXT PAV MRK & MRKS (24")	LF	111.000		111.000	
	677-6012	ELIM EXT PAV MRK & MRKS (WORD)	EA	1.000		1.000	
	678-6002	PAV SURF PREP FOR MRK (6")	LF	17,133.000		17,133.000	
	680-6011	INSTALL HWY TRF SIG (UPGRADE)	EA	8.000		8.000	
	682-6018	PED SIG SEC (LED)(COUNTDOWN)	EA	21.000		21.000	
	684-6079	TRF SIG CBL (TY C)(12 AWG)(2 CONDR)	LF	9,090.000		9,090.000	
	684-6080	TRF SIG CBL (TY C)(14 AWG)(2 CONDR)	LF	3,740.000		3,740.000	
	687-6001	PED POLE ASSEMBLY	EA	3.000		3.000	
	688-6001	PED DETECT PUSH BUTTON (APS)	EA	54.000		54.000	
	688-6003	PED DETECTOR CONTROLLER UNIT	EA	8.000		8.000	
	760-6001	DITCH CLEANING AND RESHAPING (FOOT)	LF	12,481.000		12,481.000	
	6185-6002	TMA (STATIONARY)	DAY	130.000		130.000	
	6185-6005	TMA (MOBILE OPERATION)	DAY	10.000		10.000	
	18	SAFETY CONTINGENCY: CONTRACTOR FORCE ACCOUNT WORK (PARTICIPATING)	LS	1.000		1.000	
		EROSION CONTROL MAINTENANCE: CONTRACTOR FORCE ACCOUNT WORK (PART)	LS	1.000		1.000	

SUMMARY OF REMOVAL ITEMS							
LOCATION	104 6011	104 6015	104 6017	104 6021	105 6059	496 6004	496 6050
	REMOVING CONC (MEDIANS)	REMOVING CONC (SIDEWALKS)	REMOVING CONC (DRIVEWAYS)	REMOVING CONC (CURB)	REMOVING STAB BASE & ASPH PAV(13"-18")	REMOV STR (SET)	REMOV STR (DRIVEWAY CULVERT)
	SY	SY	SY	LF	SY	EA	EA
SHEET 1 OF 16	0	1111	1133	622	0	0	0
SHEET 2 OF 16	0	34	346	0	429	0	0
SHEET 3 OF 16	0	0	216	0	507	0	0
SHEET 4 OF 16	0	0	0	0	854	0	0
SHEET 5 OF 16	0	0	455	0	725	10	5
SHEET 6 OF 16	95	425	177	210	288	8	1
SHEET 7 OF 16	0	77	0	63	5	0	0
SHEET 8 OF 16	0	0	0	0	0	0	0
SHEET 9 OF 16	0	182	0	0	0	0	0
SHEET 10 OF 16	0	183	0	0	0	4	0
SHEET 11 OF 16	0	22	1345	0	0	6	3
SHEET 12 OF 16	0	75	0	0	0	6	3
SHEET 13 OF 16	0	95	0	0	0	0	0
SHEET 14 OF 16	0	0	0	0	0	0	0
SHEET 15 OF 16	0	20	0	0	0	0	0
SHEET 16 OF 16	0	0	0	0	0	0	0
PROJECT TOTALS	95	2224	3672	895	2808	34	12

SUMMARY OF WORKZONE TRAFFIC CONTROL ITEMS				
LOCATION	506 6022	506 6024	6185 6002	6185 6005
	CONSTRUCTION EXITS (INSTALL) (TY 3)	CONSTRUCTION EXITS (REMOVE)	TMA (STATIONARY)	TMA (MOBILE OPERATION)
	SY	SY	DAY	DAY
PHASE 3 SHEET 1	438	438		
PHASE 3 SHEET 2	0	0		
PHASE 3 SHEET 3	288	288		
PHASE 3 SHEET 4	370	370		
PHASE 3 SHEET 5	413	413	130	10
PHASE 3 SHEET 6	936	936		
PHASE 3 SHEET 7	1611	1611		
PHASE 3 SHEET 8	2106	2106		
PHASE 3 SHEET 9	2296	2296		
PHASE 3 SHEET 10	1687	1687		
PROJECT TOTALS	10145	10145	130	10

NO.	DATE	REVISION	APPROVED

Texas Department of Transportation
©2023

JONES|CARTER
Texas Board of Professional Engineers Registration No. F-23290
4350 Lockhill Selma Rd, Suite 100• San Antonio, Texas 78249 •210.494.5511

SH 96, FM 270
SUMMARY OF REMOVAL QUANTITIES

SHEET 1 OF 1

DRAWN	FED.RD. DIV.NO.	FEDERAL AID PROJECT NO.		HIGHWAY NO.
AA	06			FM 270, ETC
DESIGNED	STATE	DIST.	COUNTY	SHEET NO.
JT	TEXAS	HOUSTON	GALVESTON	18
CHECKED	CONT.	SECT.	JOB	
NG	0912	73	215	
APPROVED				
DD				

PLOTDRIVER: BW_HALF_PDF.PLTCFG PENTABLE: LCBF.tbl
DATE: 8/1/2023 11:19:27 PM USER: sss
FILE: c:\bms\pwe101-01\stela.stover-scull\dms22651\LCBF_SUM.dgn

SUMMARY OF ROADWAY ITEMS

LOCATION	100 6002 PREPARING ROW	110 6001 EXCAVATION (ROADWAY)	132 6005 EMBANKMENT (FINAL) (ORD COMP) (TY C)	260 6012 LIME (HYD, COM OR QK) (SLRY) OR QK (DRY)	260 6079 LIME TRT (SUBGRADE) (6")	276 6232 CEM TRT (PLNT MX) (CLN) (TYA) (GR1-2) (12")	316 6405 ASPH (AC-20-5TR OR AC-20XP)	316 6126 AGGR (TY-PB GR-4 SAC-A)	334 6080 HMCL ACP TY-D AC-1.5	432 6001 RIPRAP (CONC) (4 IN)	432 6045 RIPRAP (MOW STRIP) (4 IN)	450 6052 RAIL (HANDRAIL) (TY F)	479 6001 ADJUSTING MANHOLES	479 6002 ADJUSTING INLETS	529 6011 CONC CURB (DOWEL)	529 6015 CONC CURB (TY C1)
	STA	CY	CY	TON	SY	SY	GAL	CY	TON	CY	CY	LF	EA	EA	LF	LF
Plan Sheet 1 of 29	10	374	58	28	2088	0	0	0	0	0	0	0	0	0	212	0
Plan Sheet 2 of 29	10	607	22	31	2294	0	0	0	0	0	0	0	0	0	380	0
Plan Sheet 3 of 29	4	166	89	11	838	100	32	1	14	0	0	0	0	0	0	0
Plan Sheet 4 of 29	19	582	169	43	3199	3022	967	24	440	0	0	0	0	0	0	0
Plan Sheet 5 of 29	20	393	39	25	1855	1721	551	14	243	0	0	0	0	3	0	0
Plan Sheet 6 of 29	20	277	7	16	1222	1116	357	9	149	0	0	0	0	0	0	0
Plan Sheet 7 of 29	19	408	324	29	2167	2060	659	16	304	0	0	0	0	0	0	0
Plan Sheet 8 of 29	4	143	166	14	1000	315	101	3	45	0	0	57	0	0	0	0
Plan Sheet 9 of 29	12	141	69	12	899	72	23	1	10	0	0	130	0	0	0	0
Plan Sheet 10 of 29	10	36	0	1	90	0	0	0	0	0	0	0	0	0	0	0
Plan Sheet 11 of 29	10	0	0	1	93	34	11	1	4	0	0	0	0	0	63	0
Plan Sheet 12 of 29	10	0	0	0	0	0	0	0	0	0	0	0	0	0	0	0
Plan Sheet 13 of 29	10	0	0	0	0	0	0	0	0	0	0	0	0	0	0	0
Plan Sheet 14 of 29	10	37	45	8	590	0	0	0	0	0	0	0	1	0	0	0
Plan Sheet 15 of 29	10	0	0	5	346	0	0	0	0	0	0	0	0	0	0	0
Plan Sheet 16 of 29	10	42	98	6	440	0	0	0	0	0	0	62	0	0	0	0
Plan Sheet 17 of 29	10	2	180	4	261	0	0	0	0	0	0	61	0	0	0	0
Plan Sheet 18 of 29	10	98	50	1	40	0	0	0	0	0	0	0	0	0	0	0
Plan Sheet 19 of 29	10	240	174	12	896	0	0	0	0	0	0	0	0	0	0	0
Plan Sheet 20 of 29	10	75	228	15	1144	0	0	0	0	0	0	0	1	0	0	0
Plan Sheet 21 of 29	10	227	431	19	1414	0	0	0	0	0	13	296	1	0	0	0
Plan Sheet 22 of 29	10	0	852	14	1018	0	0	0	0	1	0	76	0	0	0	0
Plan Sheet 23 of 29	10	514	213	18	1341	0	0	0	0	0	0	0	0	0	0	552
Plan Sheet 24 of 29	10	621	27	15	1133	0	0	0	0	0	0	0	0	0	0	719
Plan Sheet 25 of 29	10	49	451	18	1325	0	0	0	0	0	0	0	0	0	0	0
Plan Sheet 26 of 29	10	289	123	18	1334	0	0	0	0	0	0	0	0	0	0	0
Plan Sheet 27 of 29	10	246	71	16	1151	0	0	0	0	0	0	0	0	0	0	0
Plan Sheet 28 of 29	10	273	200	18	1316	0	0	0	0	0	0	0	0	0	0	0
Plan Sheet 29 of 29	4	101	58	6	474	0	0	0	0	0	0	0	0	0	0	0
PROJECT TOTALS	312	5941	4144	405	29968	8440	2701	69	1209	1	13	682	3	3	655	1271

SUMMARY OF ROADWAY ITEMS

LOCATION	530 6004 DRIVEWAYS (CONC)	530 6005 DRIVEWAYS (ACP)	531 6003 CONC SIDEWALKS (6")	531 6004 CURB RAMPS (TY 1)	531 6008 CURB RAMPS (TY 5)	531 6010 CURB RAMPS (TY 7)	531 6015 CURB RAMPS (TY 20)	531 6016 CURB RAMPS (TY 21)	531 6017 CURB RAMPS (TY 22)	536 6002 CONC MEDIAN	540 6002 MTL W-BEAM GD FEN (STEEL POST)	540 6016 DOWNSTREAM ANCHOR TERMINAL SECTION	544 6001 GUARDRAIL END TREATMENT (INSTALL)
	SY	SY	SY	EA	EA	EA	EA	EA	EA	SY	LF	EA	EA
Plan Sheet 1 of 29	481	0	1720	2	0	0	0	0	0	0	0	0	0
Plan Sheet 2 of 29	668	171	1897	0	0	0	0	0	0	0	0	0	0
Plan Sheet 3 of 29	0	0	604	0	0	2	0	0	0	0	0	0	0
Plan Sheet 4 of 29	0	237	0	0	0	0	0	0	0	0	0	0	0
Plan Sheet 5 of 29	0	188	0	0	0	0	0	0	0	0	0	0	0
Plan Sheet 6 of 29	0	0	0	0	0	0	0	0	0	0	0	0	0
Plan Sheet 7 of 29	0	359	0	0	0	0	0	0	0	0	0	0	0
Plan Sheet 8 of 29	0	0	555	1	0	0	2	0	3	43	0	0	0
Plan Sheet 9 of 29	0	0	693	1	0	0	0	0	3	50	0	0	0
Plan Sheet 10 of 29	0	0	75	0	0	0	0	0	0	0	0	0	0
Plan Sheet 11 of 29	0	0	42	0	0	0	0	0	0	0	0	0	0
Plan Sheet 12 of 29	0	0	0	0	0	0	0	0	0	0	0	0	0
Plan Sheet 13 of 29	0	0	0	0	0	0	0	0	0	0	0	0	0
Plan Sheet 14 of 29	0	0	501	5	0	0	1	0	0	0	0	0	0
Plan Sheet 15 of 29	0	0	288	0	0	0	1	0	0	0	0	0	0
Plan Sheet 16 of 29	0	0	366	0	0	1	0	0	0	0	0	0	0
Plan Sheet 17 of 29	0	0	213	0	0	1	0	0	0	0	0	0	0
Plan Sheet 18 of 29	0	0	22	0	0	0	0	0	0	0	0	0	0
Plan Sheet 19 of 29	0	1358	743	0	0	0	0	0	0	0	0	0	0
Plan Sheet 20 of 29	0	0	952	0	0	2	2	1	0	0	0	0	0
Plan Sheet 21 of 29	0	0	1176	0	0	0	0	0	0	0	228	1	1
Plan Sheet 22 of 29	0	0	839	0	0	2	0	0	0	0	0	0	0
Plan Sheet 23 of 29	0	0	1117	0	0	0	0	0	0	0	0	0	0
Plan Sheet 24 of 29	0	0	935	0	0	2	0	0	0	0	0	0	0
Plan Sheet 25 of 29	0	0	1110	0	0	0	0	0	0	0	0	0	0
Plan Sheet 26 of 29	0	0	1112	0	0	0	0	0	0	0	0	0	0
Plan Sheet 27 of 29	0	0	959	0	2	0	0	0	0	0	0	0	0
Plan Sheet 28 of 29	0	0	1097	0	0	0	0	0	0	0	0	0	0
Plan Sheet 29 of 29	0	0	395	0	0	0	0	0	0	0	0	0	0
PROJECT TOTALS	1149	2313	17411	9	2	10	6	1	6	93	228	1	1

NO.	DATE	REVISION	APPROVED

Texas Department of Transportation
©2023

JONES | CARTER
Texas Board of Professional Engineers Registration No. F-23290
4350 Lockhill Selma Rd, Suite 100 • San Antonio, Texas 78249 • 210.494.5511

SH 96, FM 270
SUMMARY OF BICYCLE FACILITY QUANTITIES

SHEET 1 OF 1

DRAWN	FED.RD. DIV.NO.	FEDERAL AID PROJECT NO.		HIGHWAY NO.
AA	06			FM 270, ETC
DESIGNED	STATE	DIST.	COUNTY	SHEET NO.
JT	TEXAS	HOUSTON	GALVESTON	19
CHECKED	CONT.	SECT.	JOB	
NG	0912	73	215	
APPROVED				
DD				

PLOTDRIVER: LCBF.pltcfg PENTABLE: LCBF.tbl
DATE: 8/1/2023 11:51:44 AM USER: sss
FILE: c:\bms\pwe101-01\stella.staver-scull\dms22651\LCBF_RDWY_SUM.dgn

SUMMARY OF DRAINAGE ITEMS											
LOCATION	400 6001*	462 6003	462 6006	462 6021	464 6005	464 6007	464 6010	464 6033	465 6168	465 6225	466 6154
	STRUCT EXCAV	CONC BOX CULV (4 FT X 2 FT)	CONC BOX CULV (5 FT X 2 FT)	CONC BOX CULV (8 FT X 6 FT)	RC PIPE (CL III)(24 IN)	RC PIPE (CL III)(30 IN)	RC PIPE (CL III)(48 IN)	RC PIPE (ARCH)(CL III)(DES 4)	INLET (COMPL)(TY A)	JCT BOX (COMPL)(SPL)	WINGWALL (FW - 0) (HW=7 FT)
	CY	LF	LF	LF	LF	LF	LF	LF	EA	EA	EA
SHEET 1	40	0	0	0	26	0	0	0	7	0	0
SHEET 2	194	288	0	0	186	0	0	0	0	0	0
SHEET 3	273	0	361	0	318	0	0	35	0	0	0
SHEET 4	0	0	427	0	10	0	0	0	2	1	0
SHEET 5	140	0	0	0	0	0	134	0	0	1	0
SHEET 6	0	0	0	0	0	0	0	0	0	0	0
SHEET 7	0	0	0	0	0	0	0	0	0	0	0
SHEET 8	0	0	0	0	226	0	0	0	0	0	0
SHEET 9	0	0	0	0	60	364	0	0	2	0	0
SHEET 10	0	0	0	0	0	0	0	0	0	0	0
SHEET 11	0	0	0	76	0	0	0	0	0	0	2
SHEET 12	0	0	0	0	0	0	0	0	0	0	0
SHEET 13	0	0	0	0	0	0	0	0	0	0	0
SHEET 14	0	0	0	0	0	0	0	0	0	0	0
SHEET 15	0	0	0	0	0	0	0	0	0	0	0
SHEET 16	0	0	0	0	0	0	0	0	0	0	0
SHEET 17	0	0	0	0	0	0	0	0	0	0	0
SHEET 18	0	0	0	0	0	0	0	0	0	0	0
SHEET 19	0	0	0	0	0	0	0	0	0	0	0
PROJECT TOTALS	647	288	788	76	826	364	134	35	11	2	2

* NO SEPARATE PAY ITEM. FOR CONTRACTOR'S INFORMATION ONLY

SUMMARY OF DRAINAGE ITEMS								
LOCATION	467 6139	467 6166	467 6391	467 6420	467 6469	467 6548	479 6006	760 6001
	SET (TY I)(S=4 FT)(HW=3 FT)(4:1) (C)	SET (TY I)(S=5 FT)(HW=2 FT)(4:1) (C)	SET (TY II)(24 IN) (RCP)(4:1) (P)	SET (TY II)(30 IN) (RCP)(4:1) (P)	SET (TY II)(48 IN) (CMP)(4:1) (P)	SET (TY II)(DES 4) (CMP)(4:1) (P)	ADJUSTING INLET (CAP)	DITCH CLEANING AND RESHAPING (FOOT)
	EA	EA	EA	EA	EA	EA	EA	LF
SHEET 1	0	0	0	0	0	0	7	0
SHEET 2	2	0	4	0	0	0	0	330
SHEET 3	0	4	7	0	0	2	0	1593
SHEET 4	0	1	0	0	0	0	0	861
SHEET 5	0	0	0	0	6	0	0	630
SHEET 6	0	0	0	0	0	0	0	243
SHEET 7	0	0	0	0	0	0	0	174
SHEET 8	0	0	4	0	0	0	0	0
SHEET 9	0	0	2	4	0	0	0	787
SHEET 10	0	0	0	0	0	0	0	777
SHEET 11	0	0	0	0	0	0	0	771
SHEET 12	0	0	0	0	0	0	0	830
SHEET 13	0	0	0	0	0	0	0	796
SHEET 14	0	0	0	0	0	0	0	736
SHEET 15	0	0	0	0	0	0	0	928
SHEET 16	0	0	0	0	0	0	0	1000
SHEET 17	0	0	0	0	0	0	0	665
SHEET 18	0	0	0	0	0	0	0	988
SHEET 19	0	0	0	0	0	0	0	372
PROJECT TOTALS	2	5	17	4	6	2	7	12481

NO.	DATE	REVISION	APPROVED

Texas Department of Transportation
©2023

JONES|CARTER
Texas Board of Professional Engineers Registration No. F-23290
4350 Lockhill Selma Rd, Suite 100 • San Antonio, Texas 78249 • 210.494.5511

SH 96, FM 270
SUMMARY OF DRAINAGE QUANTITIES

SHEET 1 OF 1

DRAWN	FED.RD. DIV.NO.	FEDERAL AID PROJECT NO.		HIGHWAY NO.
AA	06			FM 270, ETC
DESIGNED	STATE	DIST.	COUNTY	SHEET NO.
JT	TEXAS	HOUSTON	GALVESTON	20
CHECKED	CONT.	SECT.	JOB	
NG	0912	73	215	
APPROVED				
DD				

PLOTDRIVER: BW_HALF_PDF.PLTCFG PENTABLE:LCBF.tbl
DATE:8/1/2023 11:16:06 PM USER:sss
FILE:c:\bms\pwe101-01\stela.staver-scull\dms22651\LCBF_DRNG_SUM.dgn

SUMMARY OF TRAFFIC SIGNAL ITEMS

LOCATION	618 6046	620 6009	680 6011	682 6018	684 6079	684 6080	687 6001	688 6001	688 6003
	CONDT (PVC) (SCH 80) (2")	ELEC CONDR (NO.6) BARE	INSTALL HWY TRF SIG (UPGRADE)	PED SIG SEC (LED)(COUNTDOWN)	TRF SIG CBL (TY C)(12 AWG)(2 CONDR)	TRF SIG CBL (TY C)(14 AWG)(2 CONDR)	PED POLE ASSEMBLY	PED DETECT PUSH BUTTON (APS)	PED DETECTOR CONTROLLER UNIT
	LF	LF	EA	EA	LF	LF	EA	EA	EA
SHEET 1 OF 27	0	0	0	0	0	0	0	0	0
SHEET 2 OF 27	0	0	0	0	0	0	0	0	0
SHEET 3 OF 27	0	0	0	0	0	0	0	0	0
SHEET 4 of 27	0	0	0	0	0	0	0	0	0
SHEET 5 OF 27	0	0	1	0	1530	0	0	8	1
SHEET 6 OF 27	0	0	0	0	0	0	0	0	0
SHEET 7 OF 27	0	0	0	0	0	0	0	0	0
SHEET 8 of 27	0	0	1	14	1885	2225	0	12	1
SHEET 9 OF 27	0	0	0	0	0	0	0	0	0
SHEET 10 OF 27	0	0	0	0	0	0	0	0	0
SHEET 11 OF 27	25	30	1	0	1195	150	1	8	1
SHEET 12 of 27	0	0	0	0	0	0	0	0	0
SHEET 13 OF 27	0	0	0	0	0	0	0	0	0
SHEET 14 OF 27	0	0	1	2	1290	450	0	8	1
SHEET 15 OF 27	0	0	0	0	0	0	0	0	0
SHEET 16 OF 27	0	0	0	0	0	0	0	0	0
SHEET 17 OF 27	40	45	1	0	1230	50	1	8	1
SHEET 18 of 27	0	0	0	0	0	0	0	0	0
SHEET 19 OF 27	0	0	0	0	0	0	0	0	0
SHEET 20 OF 27	0	0	1	0	1420	0	0	8	1
SHEET 21 OF 27	0	0	0	0	0	0	0	0	0
SHEET 22 OF 27	0	0	0	0	0	0	0	0	0
SHEET 23 OF 27	30	35	1	2	310	310	1	2	1
SHEET 24 OF 27	0	0	0	0	0	0	0	0	0
SHEET 25 OF 27	0	0	0	0	0	0	0	0	0
SHEET 26 OF 27	0	0	1	3	230	555	0	0	1
SHEET 27 OF 27	0	0	0	0	0	0	0	0	0
PROJECT TOTALS	**95**	**110**	**8**	**21**	**9090**	**3740**	**3**	**54**	**8**

NO.	DATE	REVISION	APPROVED

Texas Department of Transportation
©2023

JONES | CARTER
Texas Board of Professional Engineers Registration No. F-23290
4350 Lockhill Selma Rd, Suite 100 • San Antonio, Texas 78249 • 210.494.5511

SH 96, FM 270
SUMMARY OF TRAFFIC SIGNAL MODIFICATION QUANTITIES

SHEET **01** OF **01**

DRAWN	FED.RD. DIV.NO.	FEDERAL AID PROJECT NO.		HIGHWAY NO.
LM	06			FM 270, ETC
DESIGNED	STATE	DIST.	COUNTY	SHEET NO.
EM	TEXAS	HOUSTON	GALVESTON	21
CHECKED	CONT.	SECT.	JOB	
GP	0912	73	215	
APPROVED				
DD				

PENTABLE: LCBF.tbl
PLOTDRIVER: LCBF.pltcfg
DATE: 8/1/2023 11:51:47 AM USER: sss
FILE: c:\bms\pwe101-01\stella.staver-scull\dms22651\LCBF_TRF_SUM.dgn

PAVEMENT MARKINGS SUMMARY														
SHEET NO.	STATION LIMITS	0666-6036	0666-6048	0666-6078	0666-6309	0666-6318	0666-6321	0672-6007	0677-6001	0677-6003	0677-6005	0677-6007	0677-6012	0678-6002
		REFL PAV MRK TY I (W)8"(SLD) (100MIL)	REFL PAV MRK TY I (W)24"(SLD) (100MIL)	REFL PAV MRK TY I (W)(WORD) (100MIL)	RE PM W/RET REQ TY I (W)6"(SLD) (100MIL)	RE PM W/RET REQ TY I (Y)6"(BRK) (100MIL)	RE PM W/RET REQ TY I (Y)6"(SLD) (100MIL)	REFL PAV MRKR TY I-C	ELIM EXT PAV MRK & MRKS (4")	ELIM EXT PAV MRK & MRKS (8")	ELIM EXT PAV MRK & MRKS (12")	ELIM EXT PAV MRK & MRKS (24")	ELIM EXT PAV MRK & MRKS (WORD)	PAV SURF PREP FOR MRK (6")
		LF	LF	EA	LF	LF	LF	EA	LF	LF	LF	LF	EA	LF
1 OF 16	BEGIN TO STA 150+00		432		3236						709			
2 OF 16	STA 150+00 TO STA 170+00	10	136	1	4042				24	69		65	1	3551
3 OF 16	STA 170+00 TO STA 190+00				4014									4014
4 OF 16	STA 190+00 TO STA 210+00		366		3823						660			3823
5 OF 16	STA 210+00 TO STA 230+00				4003									4003
6 OF 16	STA 230+00 TO END BEGIN TO STA 225+00	376	404		1599	136	125	20		406	673	36		1599
7 OF 16	STA 225+00 TO STA 245+00		328			462	38				607			
8 OF 16	STA 245+00 TO STA 265+00		10			453	38							
9 OF 16	STA 265+00 TO STA 285+00		270			237	175				452			
10 OF 16	STA 285+00 TO STA 305+00		444			435	160				704			
11 OF 16	STA 305+00 TO STA 325+00					383								
12 OF 16	STA 325+00 TO STA 345+00		408			342	501				741			
13 OF 16	STA 345+00 TO STA 365+00					435	253							
14 OF 16	STA 365+00 TO STA 385+00		108		143	462			110			10		143
15 OF 16	STA 385+00 TO STA 405+00		161			435	120				595			
16 OF 16	STA 405+00 TO END					330	26							
	PROJECT TOTAL	386	3067	1	20860	4110	1436	20	134	475	5141	111	1	17133

SIGNING SUMMARY					
SHEET NO.	STATION LIMITS	0644-6001	0644-6004	0644-6068	0644-6076
		IN SM RD SN SUP&AM TY 10BWG (1) SA (P)	IN SM RD SN SUP&AM TY 10BWG (1) SA (T)	RELOCATE SM RD SN SUP&AM TY 10BWG	REMOVE SM RD SN SUP&AM
		EA	EA	EA	EA
1 OF 16	BEGIN TO STA 150+00	3		1	
2 OF 16	STA 150+00 TO STA 170+00	1		5	1
3 OF 16	STA 170+00 TO STA 190+00			2	
4 OF 16	STA 190+00 TO STA 210+00		1	1	1
5 OF 16	STA 210+00 TO STA 230+00	1		7	
6 OF 16	STA 230+00 TO END BEGIN TO STA 225+00	2		5	1
7 OF 16	STA 225+00 TO STA 245+00	4			
8 OF 16	STA 245+00 TO STA 265+00	4			
9 OF 16	STA 265+00 TO STA 285+00	2		1	
10 OF 16	STA 285+00 TO STA 305+00	2			
11 OF 16	STA 305+00 TO STA 325+00				
12 OF 16	STA 325+00 TO STA 345+00	2			
13 OF 16	STA 345+00 TO STA 365+00	2			
14 OF 16	STA 365+00 TO STA 385+00	2			
15 OF 16	STA 385+00 TO STA 405+00	2			
16 OF 16	STA 405+00 TO END	2			
	PROJECT TOTAL	29	1	22	3

NO.	DATE	REVISION	APPROVED

©2023

Texas Department of Transportation

SANCHEZ-SALAZAR & ASSOCIATES, LLC
12770 Cimarron Path, Ste. 118
San Antonio, TX 78249
Phone: (210) 314-5458
TBPELS Registration No. 15685

SH 96, FM 270
SUMMARY OF SIGNING AND PAVEMENT MARKINGS QUANTITIES

SHEET 1 OF 1

DRAWN	FED.RD. DIV.NO.	FEDERAL AID PROJECT NO.		HIGHWAY NO.
CM	06			FM 270, ETC
DESIGNED	STATE	DIST.	COUNTY	SHEET NO.
CM	TEXAS	HOUSTON	GALVESTON	22
CHECKED	CONT.	SECT.	JOB	
GG	0912	73	215	
APPROVED				
GG				

PLOTDRIVER: cpypdf_ANSIB.pltcfg PENTABLE: LCBF.tbl
DATE: 7/26/2023 10:15:45 AM USER: Uvaldez
FILE: c:\bms\pwe101-01\uvaldo.valdez\dms22649\LCBF_SPM_SUMMARY.dgn

SUMMARY OF SMALL SIGNS

LAYOUT SHEET NO.	SIGN NO.	SIGN TYPE	SIGN TEXT	SIGN DIMENSIONS (IN)	PLYWOOD SIGNS	ALUMINUM SIGNS TYPE A	644 - INS SM RD SN SUP & AM																		
							TYPE OF MOUNT																		
							6001 10BWG (1) SA (P) EA	6002 10BWG (1) SA (P-BM) EA	6004 10BWG (1) SA (T) EA	6005 10BWG (1) SA (T-2EXT) EA	6006 10BWG (1) SA (U) EA	6017 10BWG (2) SA (P) EA	6019 10BWG (2) SA (T-2EXT) EA	6027 SB0 (1) SA (P) EA	6040 SB0 (1) SA (P-BM) EA	6030 SB0 (1) SA (T) EA	6031 SB0 (1) SA (T-2EXT) EA	6033 SB0 (1) SA (U) EA	6034 SB0 (1) SA (U-1EXT) EA	6035 SB0 (1) SA (U-2EXT) EA	6036 SB0 (1) SA (U-BM) EA	6037 SB0 (1) SA (U-WC) EA	6050 SB0 (2) SA (P) EA	6052 SB0 (2) SA (T-2EXT) EA
1	1	R9-7	SHARED-USE PATH RESTRICTION	12" X 18"		X	X																		
	2	R9-7	SHARED-USE PATH RESTRICTION	12" X 18"		X	X																		
	3	R2-1	SPEED LIMIT 40	30" X 36"		X	X																		
2	1	R9-7	SHARED-USE PATH RESTRICTION	12" X 18"		X	X																		
4	1	R3-7R	RIGHT LANE MUST TURN RIGHT	36" X 36"		X			X																
5	1	M2-1	JCT	21" X 15"		X	X																		
		M1-6T	96 TEXAS	24" X 24"		X	X																		
6	1	R9-7	SHARED-USE PATH RESTRICTION	12" X 18"		X	X																		
	2	D11-1	BIKE ROUTE	24" X 18"		X	X																		
7	1	D11-1	BIKE ROUTE	24" X 18"		X	X																		
	2	R1-1	STOP	18" X 18"		X	X																		
	3	R1-1	STOP	18" X 18"		X	X																		
	4	D11-1	BIKE ROUTE	24" X 18"		X	X																		
8	1	D11-1	BIKE ROUTE	24" X 18"		X	X																		
	2	R1-1	STOP	18" X 18"		X	X																		
	3	R1-1	STOP	18" X 18"		X	X																		
	4	D11-1	BIKE ROUTE	24" X 18"		X	X																		
9	1	D11-1	BIKE ROUTE	24" X 18"		X	X																		
	2	D11-1	BIKE ROUTE	24" X 18"		X	X																		
10	1	D11-1	BIKE ROUTE	24" X 18"		X	X																		
	2	D11-1	BIKE ROUTE	24" X 18"		X	X																		
12	1	D11-1	BIKE ROUTE	24" X 18"		X	X																		
	2	D11-1	BIKE ROUTE	24" X 18"		X	X																		
13	1	D11-1	BIKE ROUTE	24" X 18"		X	X																		
	2	D11-1	BIKE ROUTE	24" X 18"		X	X																		
14	1	D11-1	BIKE ROUTE	24" X 18"		X	X																		
	2	D11-1	BIKE ROUTE	24" X 18"		X	X																		
15	1	D11-1	BIKE ROUTE	24" X 18"		X	X																		
	2	D11-1	BIKE ROUTE	24" X 18"		X	X																		
16	1	R3-17aP	AHEAD	24" X 8"		X	X																		
		D11-1	BIKE ROUTE	24" X 18"		X	X																		
	2	R3-17bP	ENDS	24" X 8"		X	X																		
		D11-1	BIKE ROUTE	24" X 18"		X	X																		

GENERAL NOTES:

ALL SIGNS SHALL BE ERECTED ACCORDING TO THE LOCATION SHOWN ON THE LAYOUT SHEETS EXCEPT THAT THE ENGINEER MAY SHIFT A SIGN IN ORDER TO SECURE A MORE DESIRABLE LOCATION. THE CONTRACTOR WILL STAKE ALL SIGN LOCATIONS, AND NO CHANGES IN THOSE LOCATIONS SHALL BE MADE WITHOUT PRIOR APPROVAL OF THE ENGINEER.

ALUMINUM SIGN BLANKS(TY A)

Square Ft.	Min. Thickness
Less than 7.5	0.080"
7.5 to 15	0.100"
Greater than 15	0.125"

SUMMARY OF SMALL SIGNS

©2014 TxDOT SHEET 1 OF 1

DISTRICT	REGION	PROJECT NO.	SHEET
HOU	6		23

COUNTY	CONTROL	SECTION	JOB	HIGHWAY
GALVESTON	0912	73	215	FM2710 ETC

STD-N29

SW3P SUMMARY															
SHEET NO.	STATION LIMITS	0162-6002 BLOCK SODDING	0162-6003 STRAW OR HAYMULCH	0164-6009 BROADCAST SEED (TEMP)(WARM)	0166-6002 FERTILIZER	0168-6001 VEGETATIVE WATERING	0506-6001 ROCK FILTER DAMS (INSTALL) (TY 1)	0506-6002 ROCK FILTER DAMS (INSTALL) (TY 2)	0506-6011 ROCK FILTER DAMS (REMOVE)	0506-6020 CONSTRUCTION EXITS (INSTALL) (TY 1)	0506-6024 CONSTRUCTION EXITS (REMOVE)	0506-6038 TEMP SEDMT CONT FENCE (INSTALL)	0506-6039 TEMP SEDMT CONT FENCE (REMOVE)	0506-6041 BIODEG EROSN CONT LOGS (INSTL)(12")	0506-6043 BIODEG EROSN CONT LOGS (REMOVE)
		SY	SY	SY	TON	MG	LF	LF	LF	SY	SY	LF	LF	LF	LF
1 OF 16	BEGIN TO STA 150+00											2400	2400	300	300
2 OF 16	STA 150+00 TO STA 170+00	1393	1393	1393	0.58	69	100	40	140			1890	1890	30	30
3 OF 16	STA 170+00 TO STA 190+00	777	777	777	0.32	39	100	60	160			245	245		
4 OF 16	STA 190+00 TO STA 210+00	581	581	581	0.24	29	120	60	180			135	135		
5 OF 16	STA 210+00 TO STA 230+00	3583	3583	3583	1.48	178	80		80						
6 OF 16	STA 230+00 TO END BEGIN TO STA 225+00	4127	4127	4127	1.71	205	40		40			345	345		
7 OF 16	STA 225+00 TO STA 235+00	3033	3033	3033	1.25	150	40		40						
8 OF 16	STA 265+00 TO STA 285+00	459	459	459	0.19	23	20		20						
9 OF 16	STA 285+00 TO STA 305+00	277	277	277	0.11	14	60		60			180	180	30	30
10 OF 16	STA 305+00 TO STA 325+00	585	585	585	0.24	29	20		20						
11 OF 16	STA 325+00 TO STA 345+00	2815	2815	2815	1.16	140	80		80						
12 OF 16	STA 345+00 TO STA 365+00	8694	8694	8694	3.59	431	60	70	130			1015	1015		
13 OF 16	STA 365+00 TO STA 385+00	9447	9447	9447	3.90	468	60		60			1540	1540		
14 OF 16	STA 385+00 TO STA 405+00	3500	3500	3500	1.45	174	40		40			1760	1760		
15 OF 16	STA 385+00 TO STA 405+01	1787	1787	1787	0.74	89	20		20			1865	1865		
16 OF 16	STA 405+00 TO END	769	769	769	0.32	38	20		20			1345	1345		
	PROJECT TOTAL	41827	41827	41827	17.28	2076	860	230	1090	1560	1560	12720	12720	360	360

NO.	DATE	REVISION	APPROVED

Texas Department of Transportation
©2023

SANCHEZ-SALAZAR & ASSOCIATES, LLC
12770 Cimarron Path, Ste. 118
San Antonio, TX 78249
Phone: (210) 314-5458
TBPELS Registration No. 15685

SH 96, FM 270
SUMMARY OF
SW3P QUANTITIES

SHEET 01 OF 01

DRAWN	FED.RD. DIV.NO.	FEDERAL AID PROJECT NO.		HIGHWAY NO.
RO	06			FM 270, ETC
DESIGNED	STATE	DIST.	COUNTY	SHEET NO.
RO	TEXAS	HOUSTON	GALVESTON	24
CHECKED	CONT.	SECT.	JOB	
GG	0912	73	215	
APPROVED				
GG				

PLOTDRIVER: cpypdf_ANSIB.pltcfg PENTABLE: LCBF.tbl
DATE: 7/26/2023 9:12:26 AM USER: rortiz
FILE: c:\bms\pwe101-01\rene.ortiz\dms22652\LCBF_SW3P_SUMMARY.dgn

SEQUENCE OF CONSTRUCTION

GENERAL:

1. CONTRACTOR MUST MAINTAIN ACCESS TO ALL RESIDENCES AND BUSINESSES THROUGHOUT THE CONSTRUCTION OF IMPROVEMENTS.

2. CONTRACTOR MUST MAINTAIN POSITIVE DRAINAGE PATTERNS THROUGHOUT THE CONSTRUCTION OF IMPROVEMENTS.

3. INSTALL AND MAINTAIN TEMPORARY EROSION CONTROL MEASURES AS INDICATED ON PLANS.

4. INSTALL CONSTRUCTION BARRICADES AND TRAFFIC CONTROL DEVICES 48 HOURS PRIOR TO CONSTRUCTION PER BARRICADE AND CONSTRUCTION STANDARDS BC1-12 (21).

5. WHEN RECONSTRUCTING DRIVEWAYS, ADHERE TO HOUSTON DISTRICT STANDARD CSMD TC 8010-20.

6. WHEN CONSTRUCTING CURB RAMPS ALONG SH 96 OR FM 270, CLOSE ADJACENT LANE AND ADHERE TO TCP (1-4A). WHEN CONSTRUCTING CURB RAMPS ON CROSS STREETS, ADHERE TO TCP (1-3)-18.

7. TEMPORARY IMPACTS TO WETLANDS MUST NOT EXCEED 6 MONTHS IN DURATION

PHASE 1: GRATE INLET RELOCATIONS FROM FM 270 STA 136+20 TO STA 148+00; AND DRAINAGE IMPROVEMENTS ON SOUTHERN SIDE OF SH 96 FROM SH 96 STA 217+85 TO STA 372+35.

CONSTRUCT DRAINAGE IMPROVEMENTS INCLUDING STORM DRAIN INLET RELOCATIONS, CULVERT EXTENSIONS, DRIVEWAY CULVERTS AND DITCH IMPROVEMENTS IN AREAS OF PROPOSED SHARED USE PATH, AS SHOWN ON PLANS. ADHERE TO TCP STANDARD TCP (2-4A)-18 DURING MATERIAL DELIVERIES. RECONSTRUCT DRIVEWAYS ALONG SH 96.

PHASE 2: FM 270 WIDENING AND DRAINAGE IMPROVEMENTS FROM FM 270 STA 153+14 TO THE INTERSECTION OF SH 96, AND SIDEPATH CONSTRUCTION FROM FM 270 STA 232+00 TO THE INTERSECTION OF SH 96; AND DITCH IMPROVEMENTS ON NORTHERN SIDE OF SH 96 FROM SH 96 STA 213+05 TO STA 239+57.

CONSTRUCT AREAS OF WIDENING, INCLUDING DRIVEWAY RECONSTRUCTION, DRIVEWAY CULVERTS, NEW CULVERTS AND DITCH IMPROVEMENTS ALONG FM 270, AND DITCH IMPROVEMENTS ALONG SH 96 AS SHOWN ON PLANS. ADHERE TO TCP STANDARD (2-1B)-18.

PHASE 3: SH 96 SIDE PATH STA 218+17 TO STA 418+80

CONSTRUCT SIDE PATH ALONG SH 96, ADHERE TO TCP (2-1C)-18 DURING MATERIAL DELIVERIES. CONCURRENTLY PERFORM INTERSECTION ISLAND MEDIAN IMPROVEMENTS AND SIGNAL MODIFICATIONS, ADHERING TO TCP STANDARD WZ(BTS-1)-13. WHEN CONSTRUCTION ACCESS POINTS ACROSS WETLAND DITCH AREAS ARE NECESSARY FOR SIDEPATH CONSTRUCTION, THE CONTRACTOR IS TO USE A TEMPORARY FILL TOPPED WITH CRANE MATS. *THIS WORK WILL BE PAID FOR UNDER ITEM 506, CONSTRUCTION ENTRANCES AND EXITS. TEMPORARY IMPACTS TO WETLANDS MUST NOT EXCEED 6 MONTHS IN DURATION.

PHASE 4: FM 270 SIDE PATH

REMOVE SIDEWALKS ON WEST AND EAST SIDES OF FM 270 FROM FM 518 TO ABILENE AND REPLACE WITH SIDE PATH. ADHERE TO TCP STANDARD TCP (2-4A)-18 DURING MATERIAL DELIVERIES. RECONSTRUCT DRIVEWAYS AS SHOWN ON PLANS.

FINAL PHASE:

INSTALL PAVEMENT MARKINGS ALONG FM 270 SHOULDER FROM ABILENE TO SH 96, ADHERING TO TCP STANDARD (3-3)-14.

INSTALL SIGNS AND PAVEMENT MARKINGS ALONG FM 270 AND SH 96 SIDE PATHS.

REMOVE EROSION CONTROL MEASURES.

PERFORM FINAL CLEAN UP.

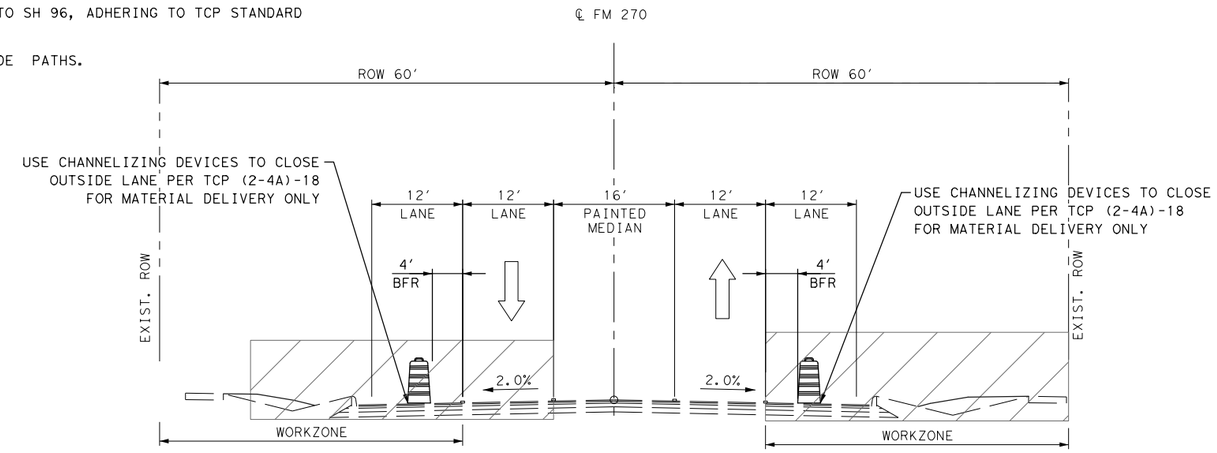

FM 270 TRAFFIC CONTROL

DITCH REGRADING/CULVERT INSTALLATION LOCATIONS

PHASE I

146+11.02 TO 148+04.13

PHASE I

136+22.58 TO 145+00.45

NO.	DATE	REVISION	APPROVED

STATE OF TEXAS
JOHANNA TORRES
130063
LICENSED
PROFESSIONAL ENGINEER
johannatorres
8/1/2023

Texas Department of Transportation
©2023

JONES|CARTER
Texas Board of Professional Engineers Registration No. F-23290
4350 Lockhill Selma Rd, Suite 100• San Antonio, Texas 78249 •210.494.5511

SH 96, FM 270 TCP TYPICAL SECTIONS AND SEQUENCE OF CONSTRUCTION

SHEET 01 OF 03

DRAWN	FED.RD. DIV.NO.	FEDERAL AID PROJECT NO.		HIGHWAY NO.
AA	06			FM 270, ETC
DESIGNED	STATE	DIST.	COUNTY	SHEET NO.
JT	TEXAS	HOUSTON	GALVESTON	25
CHECKED	CONT.	SECT.	JOB	
NG	0912	73	215	
APPROVED				
DD				

PENTABLE:LCBF.tbl
PLOTDRIVER:LCBF.pltcfg
USER:sss
11:30:21 PM
DATE:8/1/2023
FILE:c:\bms\pwe101-01\stella.staver-scull\dms22653\LCBF_TYP_SECT-SEQ_WORK_01.dgn

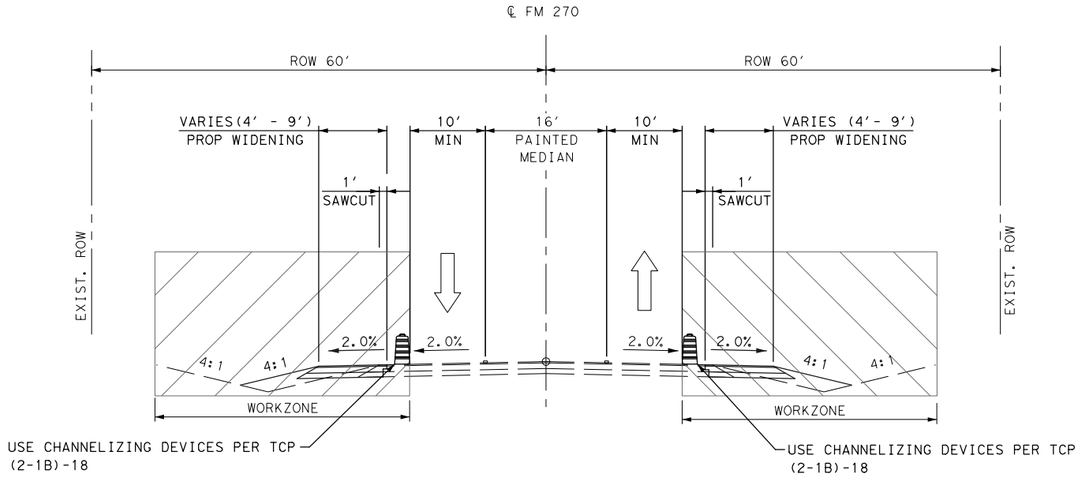

FM 270 TRAFFIC CONTROL PHASE II

SHOULDER WIDENING LOCATIONS
219+19 TO 237+21

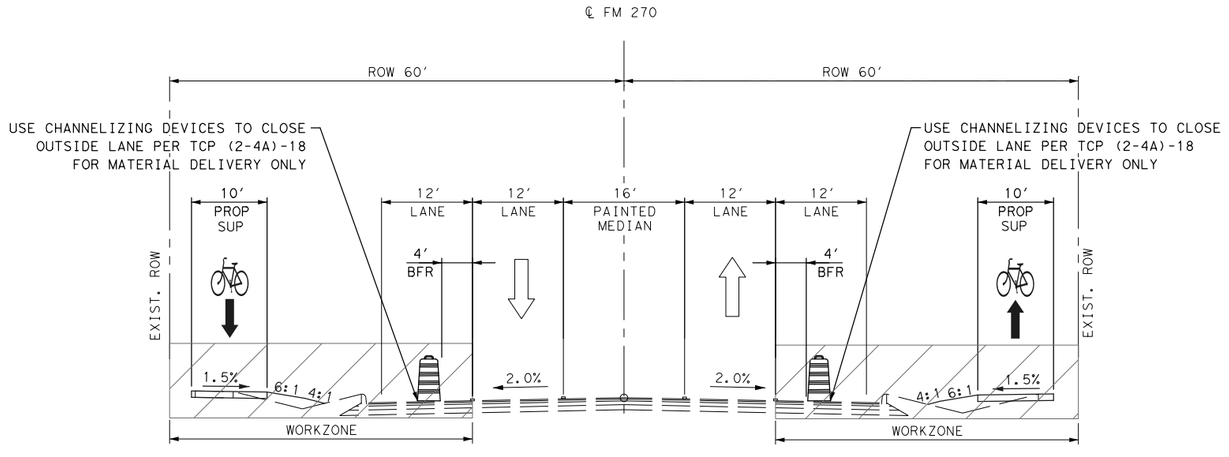

FM 270 TRAFFIC CONTROL PHASE IV

SIDE PATH CONSTRUCTION LOCATIONS
130+88 TO 153+50

NO.	DATE	REVISION	APPROVED

STATE OF TEXAS
JOHANNA TORRES
130063
LICENSED
PROFESSIONAL ENGINEER
johannatorres
8/1/2023

Texas Department of Transportation
©2023

JONES|CARTER
Texas Board of Professional Engineers Registration No. F-23290
4350 Lockhill Selma Rd, Suite 100•San Antonio, Texas 78249•210.494.5511

SH 96, FM 270
TCP TYPICAL SECTIONS AND SEQUENCE OF CONSTRUCTION

SHEET **02** OF **03**

DRAWN	FED.RD. DIV.NO.	FEDERAL AID PROJECT NO.		HIGHWAY NO.
AA	06			FM 270, ETC
DESIGNED	STATE	DIST.	COUNTY	SHEET NO.
JT	TEXAS	HOUSTON	GALVESTON	26
CHECKED	CONT.	SECT.	JOB	
NG	0912	73	215	
APPROVED				
DD				

PLOTDRIVER: LCBF.pltcfg
PENTABLE: LCBF.tbl
DATE: 8/1/2023 11:30:22 PM USER: sss
FILE: c:\bms\pwe101-01\stela.staver-scull\dms22653\LCBF_TYP_SECT-SEQ_WORK_02.dgn

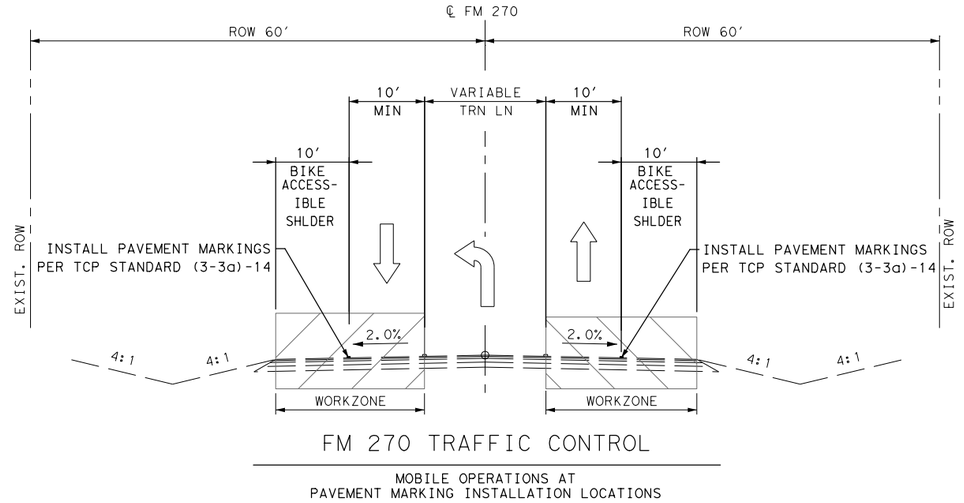

FM 270 TRAFFIC CONTROL

MOBILE OPERATIONS AT
PAVEMENT MARKING INSTALLATION LOCATIONS

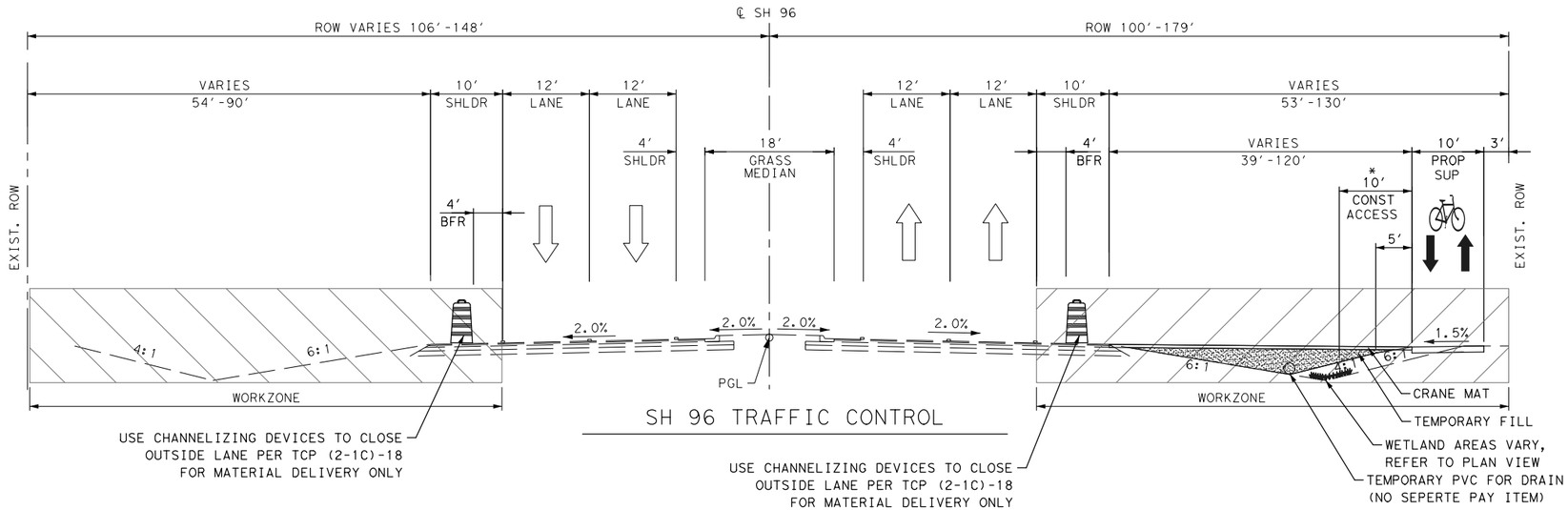

SH 96 TRAFFIC CONTROL

PHASE II

LOCATIONS OF DITCH REGRADING CONSTRUCTION
213+05 TO 239+57

PHASE I

LOCATIONS OF DITCH REGRADING CONSTRUCTION
217+85 TO 372+35

PHASE III

LOCATIONS OF SIDE PATH CONSTRUCTION
218+17 TO 418+80

NO.	DATE	REVISION	APPROVED

STATE OF TEXAS
JOHANNA TORRES
130063
LICENSED
PROFESSIONAL ENGINEER
johannatorres
8/1/2023

Texas Department of Transportation
©2023

JONES|CARTER
Texas Board of Professional Engineers Registration No. F-23290
4350 Lockhill Selma Rd, Suite 100• San Antonio, Texas 78249 •210.494.5511

SH 96, FM 270
TCP TYPICAL SECTIONS AND SEQUENCE OF CONSTRUCTION

SHEET **03** OF **03**

DRAWN	FED.RD. DIV.NO.	FEDERAL AID PROJECT NO.		HIGHWAY NO.
AA	06			FM 270,ETC
DESIGNED	STATE	DIST.	COUNTY	SHEET NO.
JT	TEXAS	HOUSTON	GALVESTON	27
CHECKED	CONT.	SECT.	JOB	
NG	0912	73	215	
APPROVED				
DD				

PLOTDRIVER: LCBF.pltcfg
PENTABLE: LCBF.tbl
DATE: 8/1/2023 11:30:24 PM USER: sss
FILE: c:\bms\pwe101-01\stela.staver-scull\dms22653\LCBF_TYP_SECT-SEQ_WORK_03.dgn

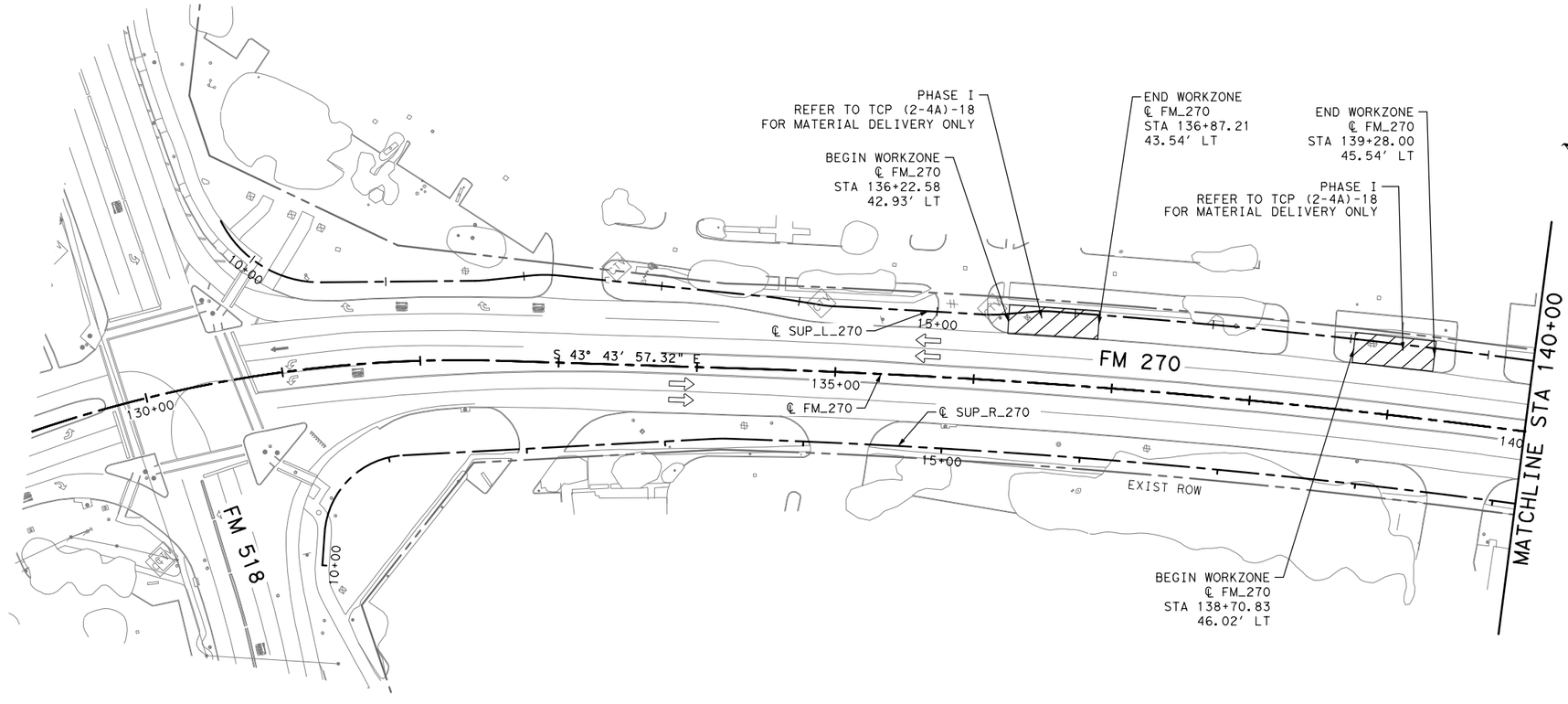

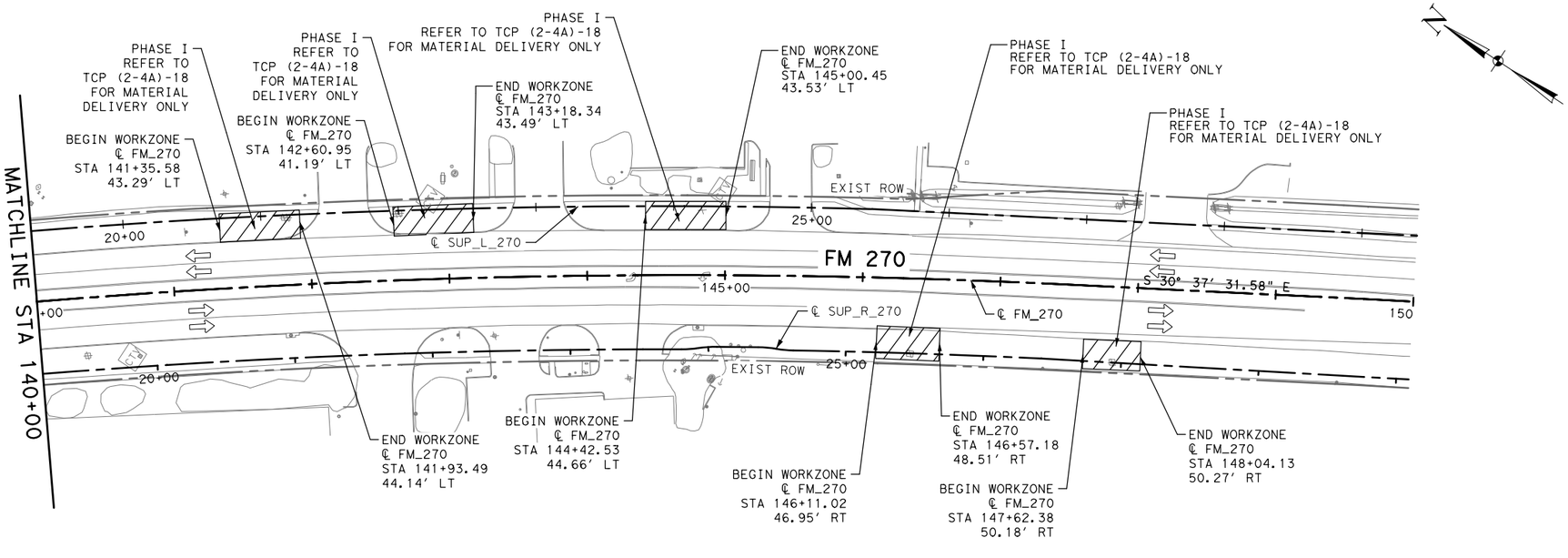

0' 25' 50' 100'

LEGEND:

- PROPOSED CONSTRUCTION THIS PHASE
- WETLAND
- EXIST TRAFFIC FLOW
- (A) SIDEWALK CLOSED — R9-9, 24x12

NO.	DATE	REVISION	APPROVED

STATE OF TEXAS
JOHANNA TORRES
130063
LICENSED
PROFESSIONAL ENGINEER
johannatorres
8/1/2023

Texas Department of Transportation
©2023

JONES|CARTER
Texas Board of Professional Engineers Registration No. F-23290
4350 Lockhill Selma Rd, Suite 100• San Antonio, Texas 78249 •210.494.5511

SH 96, FM 270
TRAFFIC CONTROL PLAN
PHASE 1

BEGIN PROJECT TO STA 150+00

SHEET 1 OF 7

DRAWN	FED.RD. DIV.NO.	FEDERAL AID PROJECT NO.		HIGHWAY NO.
AA	06			FM 270, ETC
DESIGNED	STATE	DIST.	COUNTY	SHEET NO.
JT	TEXAS	HOUSTON	GALVESTON	28
CHECKED	CONT.	SECT.	JOB	
NG	0912	73	215	
APPROVED				
DD				

PLOTDRIVER: LCBF.pltcfg PENTABLE: LCBF.tbl
DATE:8/1/2023 11:30:30 PM USER:sss
FILE:c:\dms\pwe101-01\stela.staver-scull\dms22653\LCBF_TCP_PH1_01.dgn

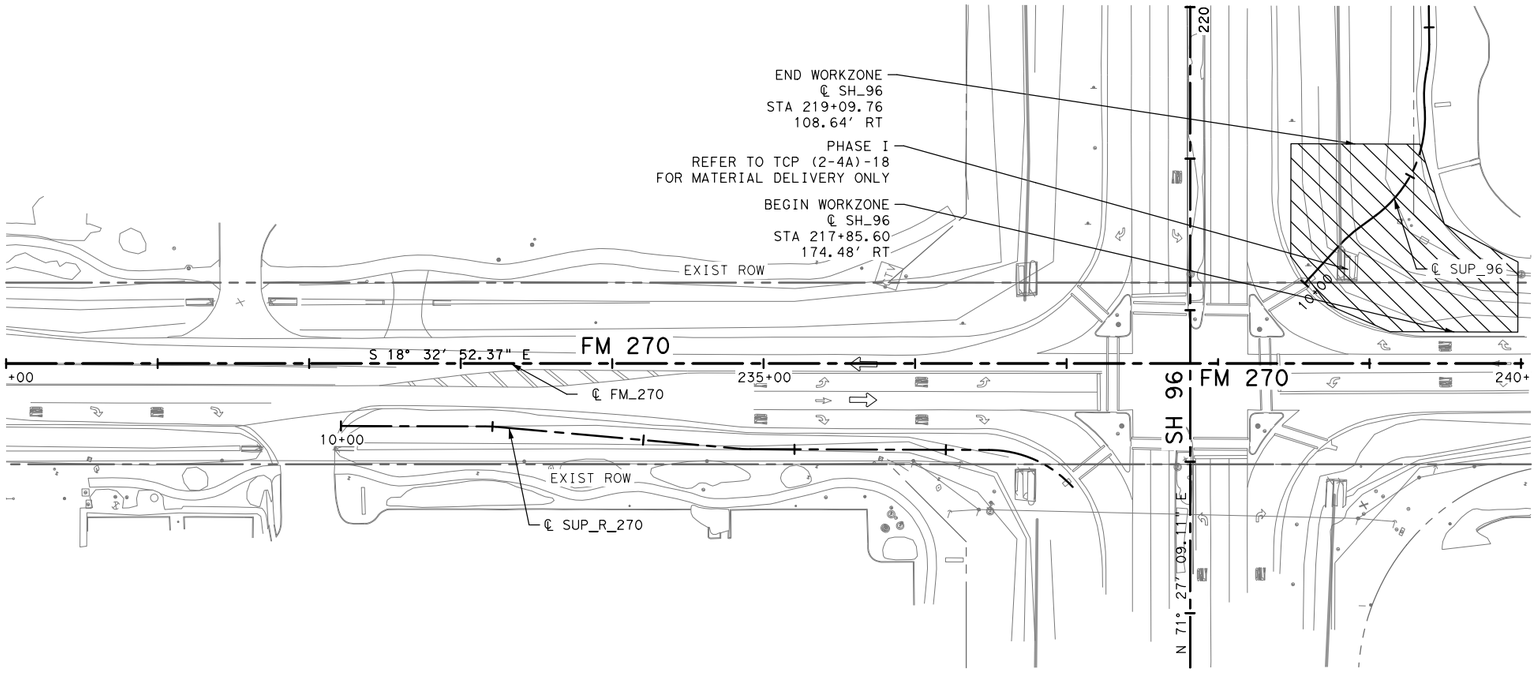

0' 25' 50' 100'

LEGEND:

- PROPOSED CONSTRUCTION THIS PHASE
- WETLAND
- EXIST TRAFFIC FLOW
- (A) SIDEWALK CLOSED — R9-9 24x12

NO.	DATE	REVISION	APPROVED

STATE OF TEXAS
JOHANNA TORRES
130063
LICENSED PROFESSIONAL ENGINEER
johannatorres
8/1/2023

Texas Department of Transportation
©2023

JONES|CARTER
Texas Board of Professional Engineers Registration No. F-23290
4350 Lockhill Selma Rd, Suite 100•San Antonio, Texas 78249•210.494.5511

SH 96, FM 270
TRAFFIC CONTROL PLAN
PHASE 1

FM 270 STA 230+00 TO SH 96 STA 220+00

SHEET 2 OF 7

DRAWN	FED.RD. DIV.NO.	FEDERAL AID PROJECT NO.		HIGHWAY NO.
AA	06			FM 270,ETC
DESIGNED	STATE	DIST.	COUNTY	SHEET NO.
JT	TEXAS	HOUSTON	GALVESTON	29
CHECKED	CONT.	SECT.	JOB	
NG	0912	73	215	
APPROVED				
DD				

PENTABLE:LCBF.tbl
PLOTDRIVER:LCBF.pltcfg
DATE:8/1/2023 11:30:32 PM USER:sss
FILE:c:\bms\pwe101-01\stela.staver-scull\dms22653\LCBF_TCP_PH1_02.dgn

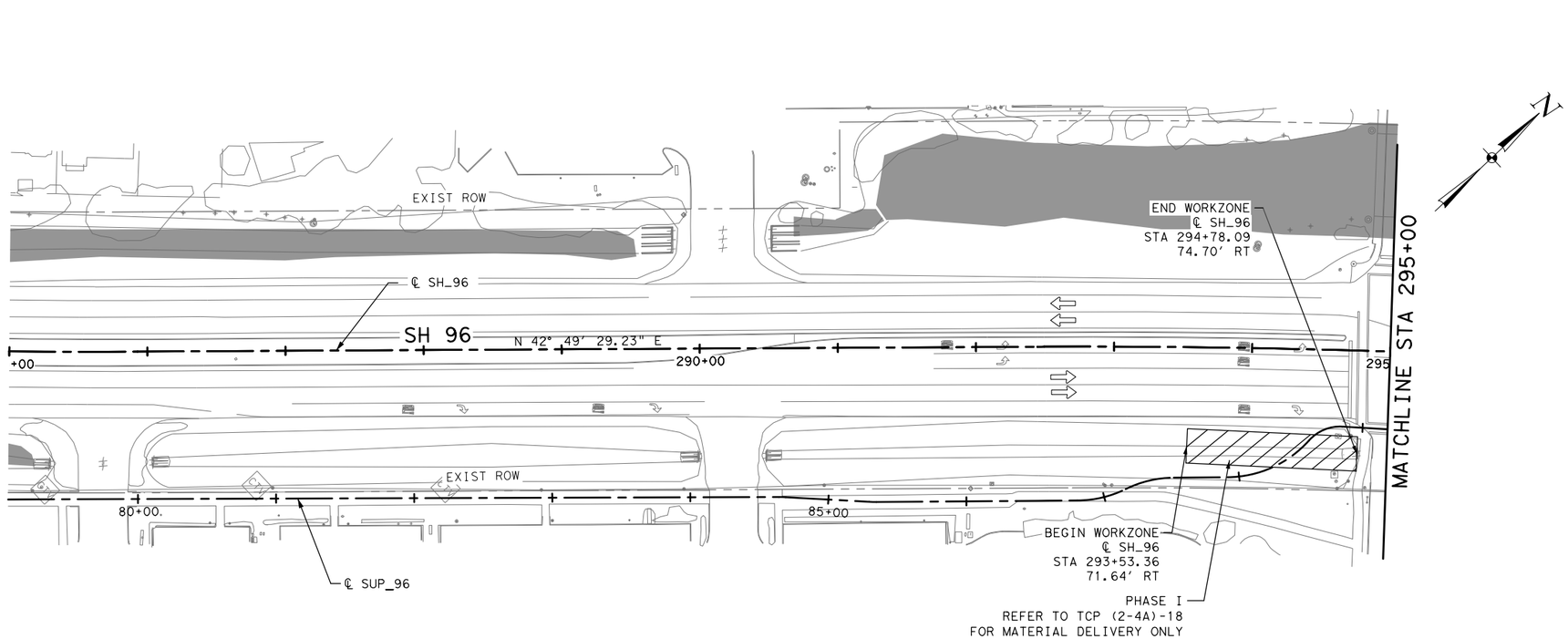

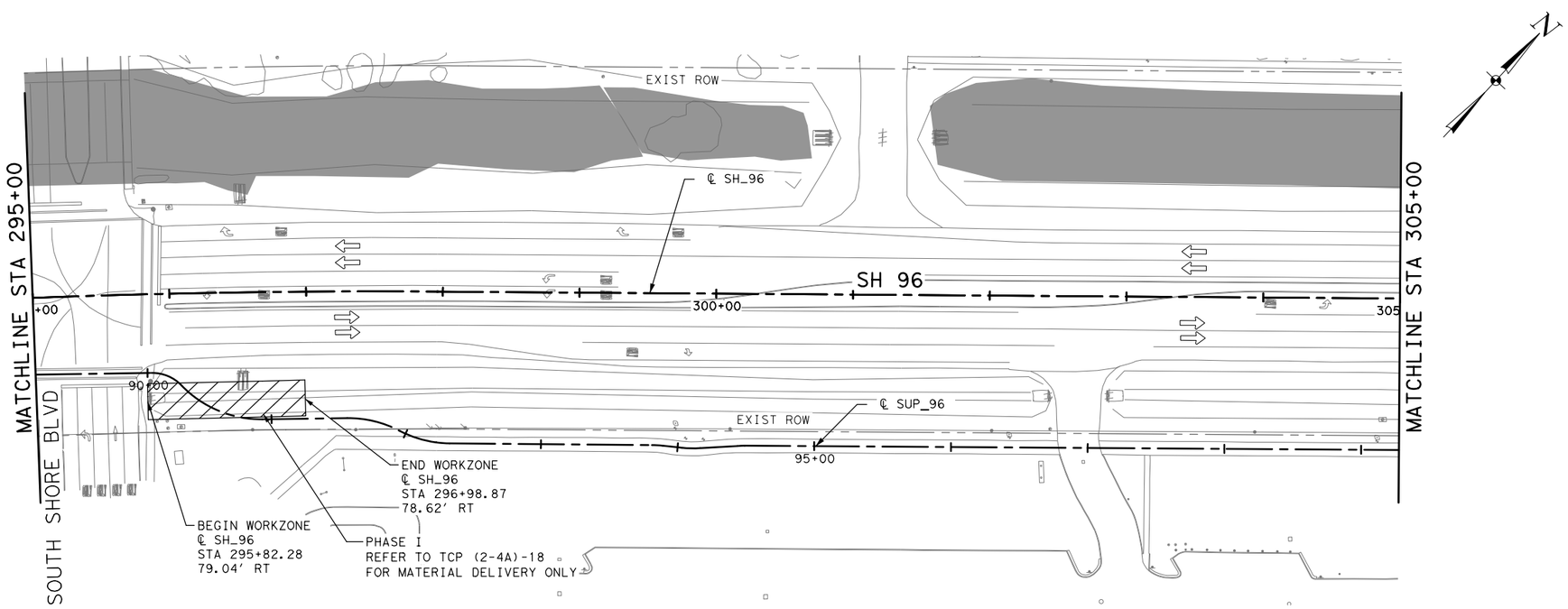

LEGEND:

- PROPOSED CONSTRUCTION THIS PHASE
- WETLAND
- EXIST TRAFFIC FLOW
- (A) SIDEWALK CLOSED — R9-9, 24x12

NO.	DATE	REVISION	APPROVED

STATE OF TEXAS
JOHANNA TORRES
130063
LICENSED
PROFESSIONAL ENGINEER
Johanna Torres
8/1/2023

Texas Department of Transportation
©2023

JONES | CARTER
Texas Board of Professional Engineers Registration No. F-23290
4350 Lockhill Selma Rd, Suite 100 • San Antonio, Texas 78249 • 210.494.5511

SH 96, FM 270
TRAFFIC CONTROL PLAN
PHASE 1

STA 285+00 TO STA 305+00

SHEET 3 OF 7

DRAWN	FED. RD. DIV. NO.	FEDERAL AID PROJECT NO.		HIGHWAY NO.
AA	06			FM 270, ETC
DESIGNED				
JT	STATE	DIST.	COUNTY	SHEET NO.
CHECKED	TEXAS	HOUSTON	GALVESTON	30
NG	CONT.	SECT.	JOB	
APPROVED	0912	73	215	
DD				

PENTABLE: LCBF.tbl
PLOTDRIVER: LCBF.pltcfg
USER: sss
11:30:35 PM
DATE: 8/1/2023
FILE: c:\bms\pwe101-01\stela.staver-scull\dms22653\LCBF_TCP_PH1_03.dgn

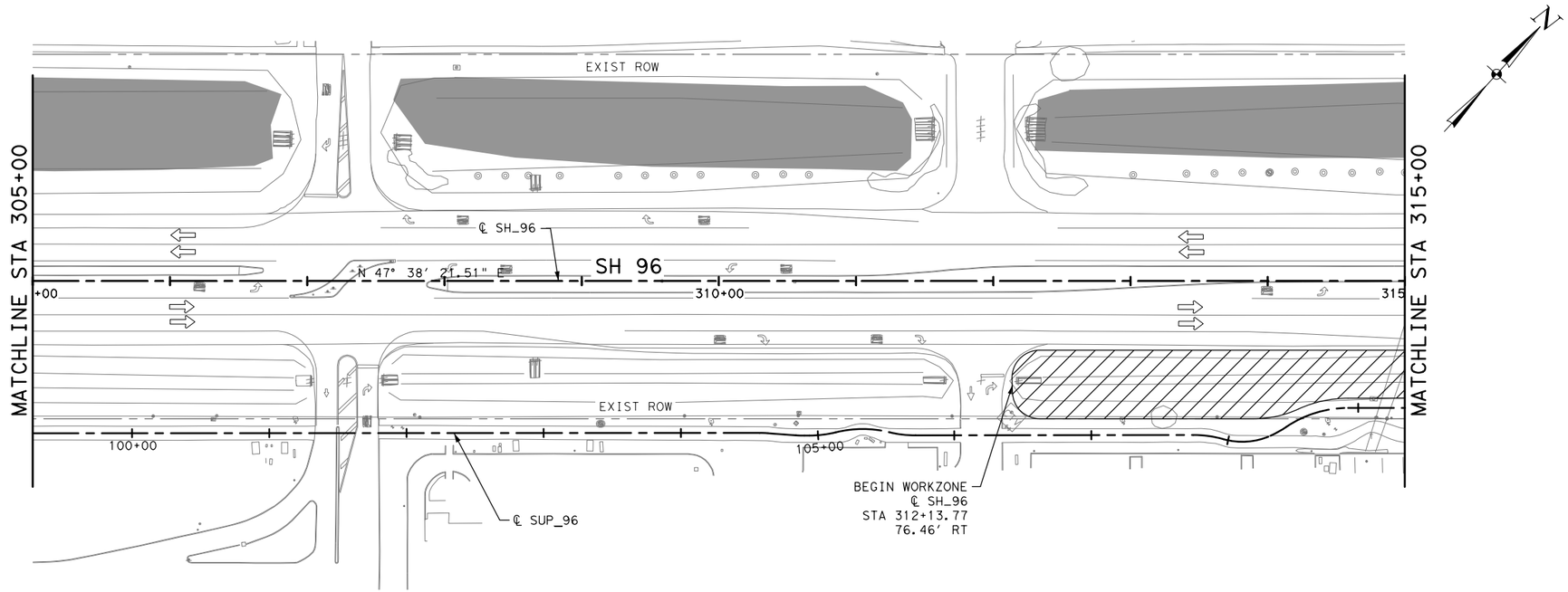

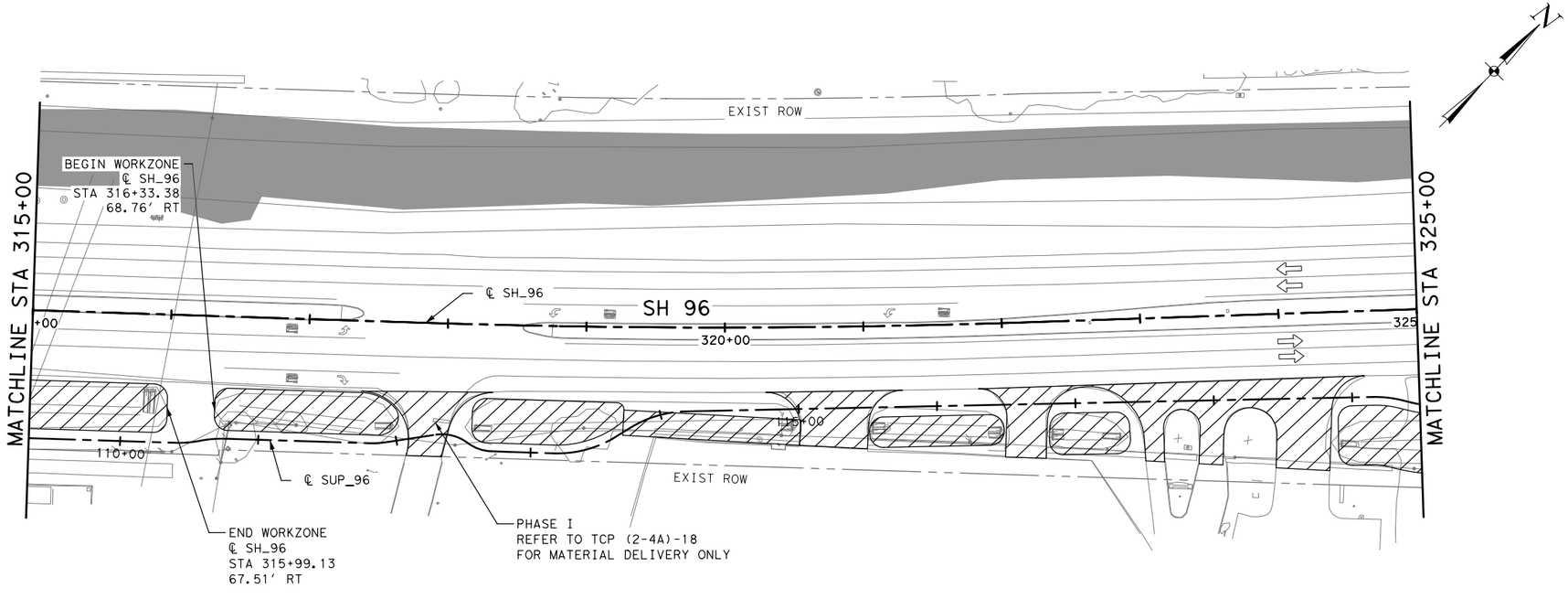

0' 25' 50' 100'

LEGEND:

- PROPOSED CONSTRUCTION THIS PHASE
- WETLAND
- EXIST TRAFFIC FLOW
- (A) SIDEWALK CLOSED — R9-9 24x12

NO.	DATE	REVISION	APPROVED

STATE OF TEXAS
JOHANNA TORRES
130063
LICENSED PROFESSIONAL ENGINEER
johannatorres
8/1/2023

Texas Department of Transportation
©2023

JONES|CARTER
Texas Board of Professional Engineers Registration No. F-23290
4350 Lockhill Selma Rd, Suite 100• San Antonio, Texas 78249 • 210.494.5511

SH 96, FM 270
TRAFFIC CONTROL PLAN
PHASE 1
STA 305+00 TO STA 325+00

SHEET 4 OF 7

DRAWN	FED.RD. DIV.NO.	FEDERAL AID PROJECT NO.		HIGHWAY NO.
AA	06			FM 270, ETC
DESIGNED	STATE	DIST.	COUNTY	SHEET NO.
JT	TEXAS	HOUSTON	GALVESTON	31
CHECKED	CONT.	SECT.	JOB	
NG	0912	73	215	
APPROVED				
DD				

PENTABLE:LCBF.tbl
PLOTDRIVER:LCBF.pltcfg
DATE:8/1/2023 11:30:37 PM USER:sss
FILE:c:\bms\pwe101-01\stela.staver-scull\dms22653\LCBF_TCP_PH1_04.dgn

PENTABLE: LCBF.tbl
PLOTDRIVER: LCBF.pltcfg
DATE: 8/1/2023 11:30:39 PM USER: sss
FILE: c:\bms\pwe101-01\stela.staver-scull\dms22653\LCBF_TCP_PH1_05.dgn

0' 25' 50' 100'

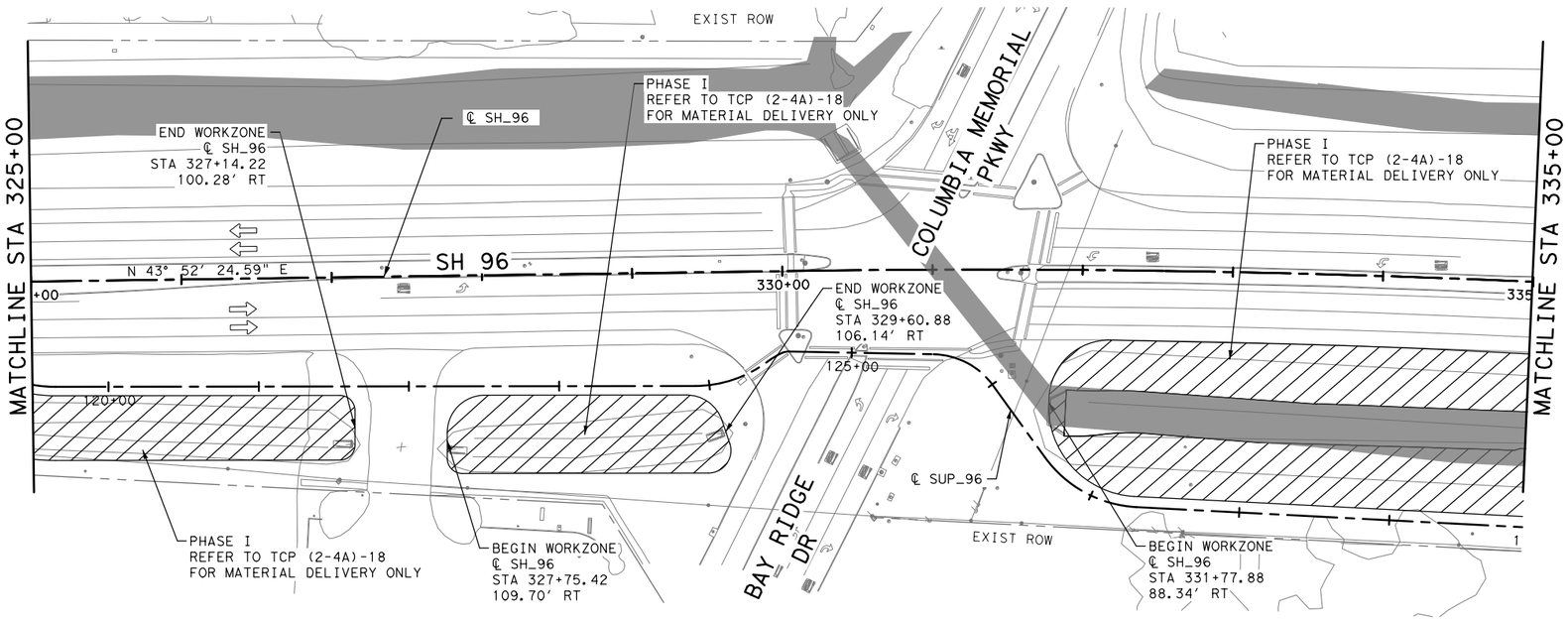

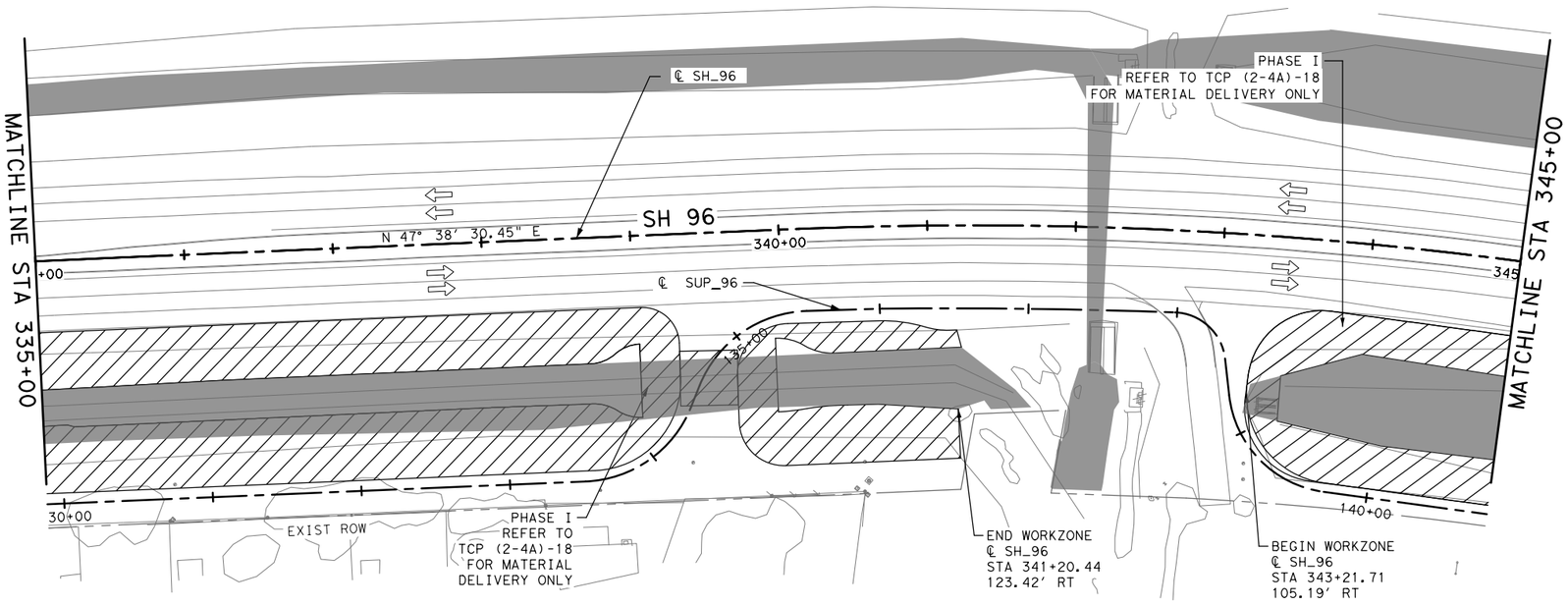

LEGEND:

- PROPOSED CONSTRUCTION THIS PHASE
- WETLAND
- EXIST TRAFFIC FLOW
- (A) SIDEWALK CLOSED

R9-9
24x12

NO.	DATE	REVISION	APPROVED

Texas Department of Transportation
©2023

JONES|CARTER
Texas Board of Professional Engineers Registration No. F-23290
4350 Lockhill Selma Rd, Suite 100 • San Antonio, Texas 78249 • 210.494.5511

SH 96, FM 270
TRAFFIC CONTROL PLAN
PHASE 1
STA 325+00 TO STA 345+00

SHEET 5 OF 7

DRAWN	FED.RD. DIV.NO.	FEDERAL AID PROJECT NO.		HIGHWAY NO.
AA	06			FM 270, ETC
DESIGNED	STATE	DIST.	COUNTY	SHEET NO.
JT	TEXAS	HOUSTON	GALVESTON	32
CHECKED	CONT.	SECT.	JOB	
NG	0912	73	215	
APPROVED				
DD				

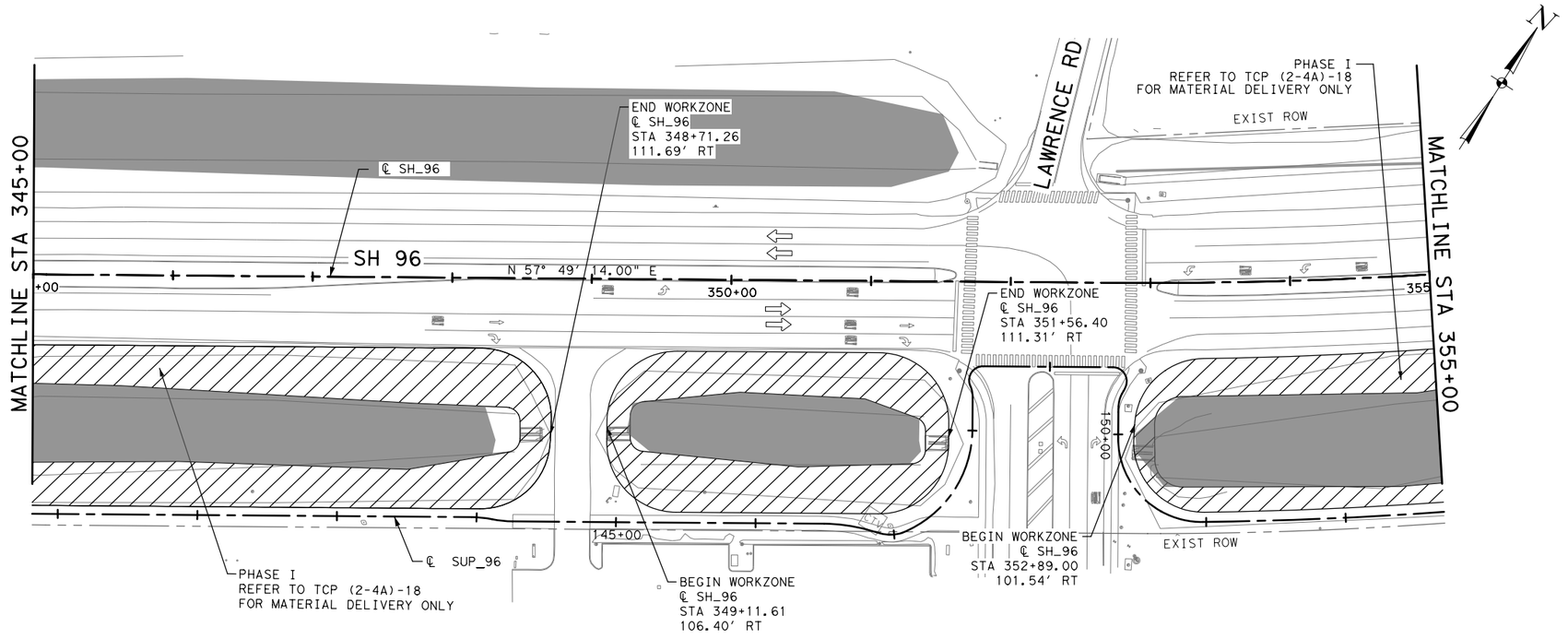

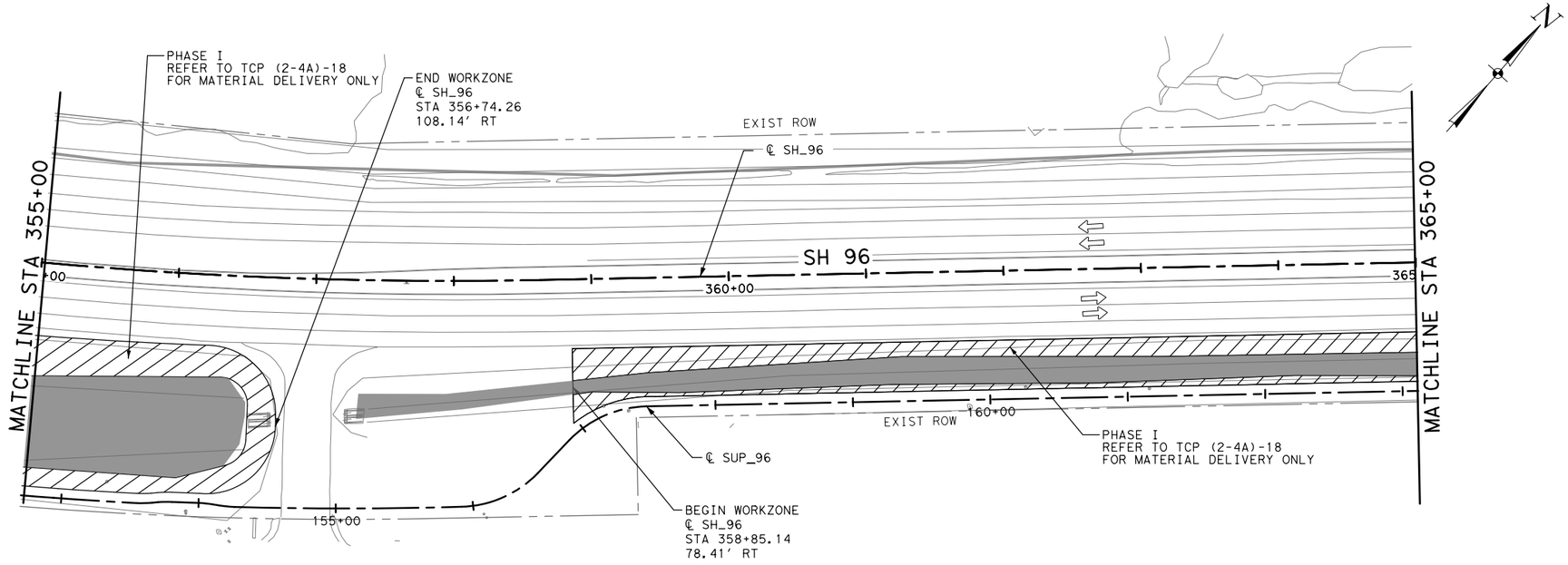

LEGEND:

- PROPOSED CONSTRUCTION THIS PHASE
- WETLAND
- EXIST TRAFFIC FLOW
- (A) SIDEWALK CLOSED — R9-9, 24x12

NO.	DATE	REVISION	APPROVED

STATE OF TEXAS
JOHANNA TORRES
130063
LICENSED PROFESSIONAL ENGINEER
johannatorres
8/1/2023

Texas Department of Transportation
©2023

JONES|CARTER
Texas Board of Professional Engineers Registration No. F-23290
4350 Lockhill Selma Rd, Suite 100• San Antonio, Texas 78249 • 210.494.5511

SH 96, FM 270
TRAFFIC CONTROL PLAN
PHASE 1

STA 345+00 TO STA 365+00

SHEET 6 OF 7

DRAWN	FED.RD. DIV.NO.	FEDERAL AID PROJECT NO.		HIGHWAY NO.
AA	06			FM 270, ETC
DESIGNED	STATE	DIST.	COUNTY	SHEET NO.
JT	TEXAS	HOUSTON	GALVESTON	33
CHECKED	CONT.	SECT.	JOB	
NG	0912	73	215	
APPROVED				
DD				

PLOTDRIVER: LCBF.pltcfg PENTABLE: LCBF.tbl

DATE:8/1/2023 11:30:41 PM USER:sss
FILE:c:\bms\pwe101-01\stela.staver-scull\dms22653\LCBF_TCP_PH1_06.dgn

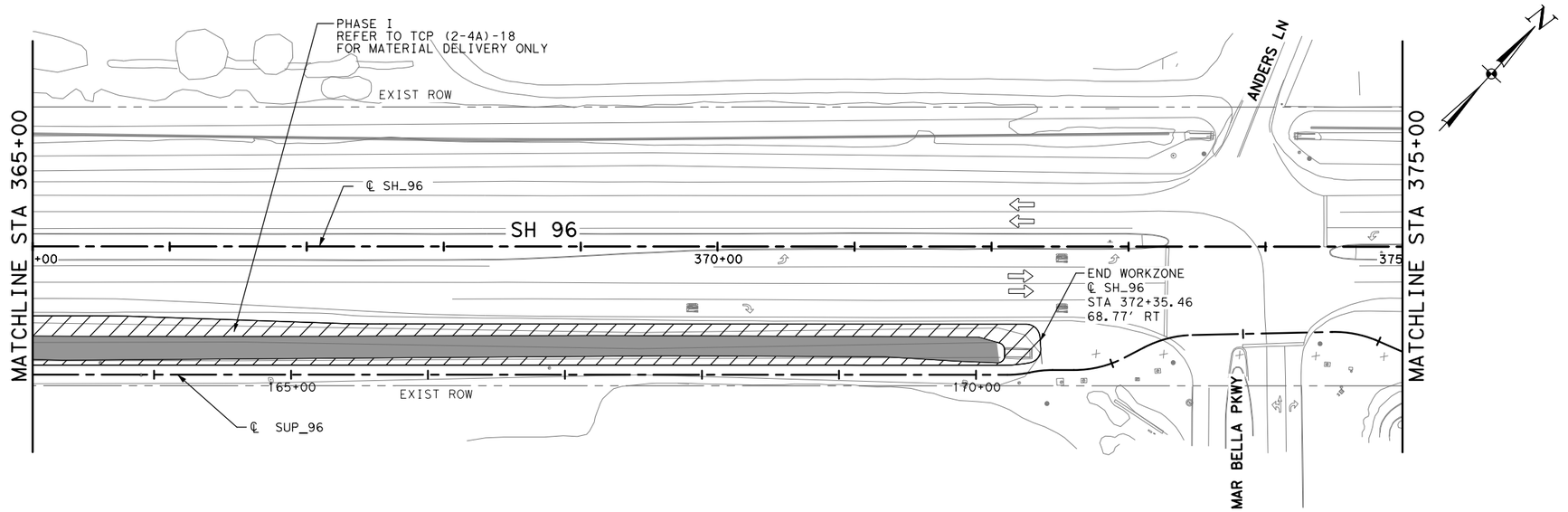

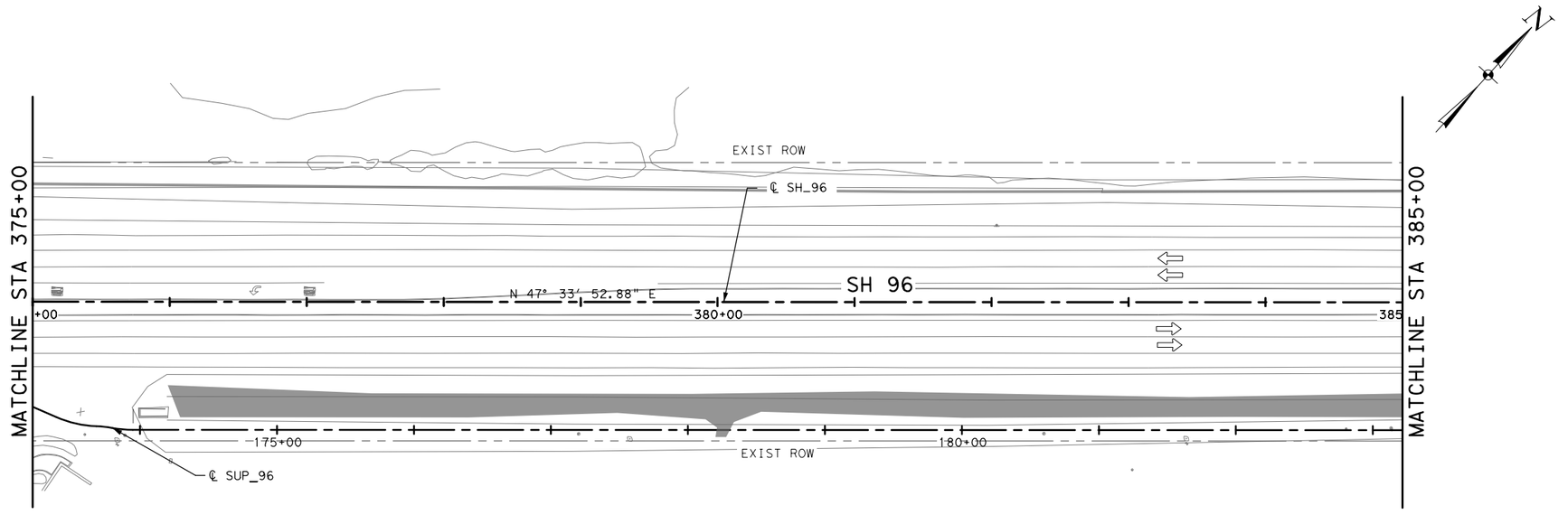

0' 25' 50' 100'

LEGEND:

- PROPOSED CONSTRUCTION THIS PHASE
- WETLAND
- EXIST TRAFFIC FLOW
- (A) SIDEWALK CLOSED
  R9-9
  24x12

NO.	DATE	REVISION	APPROVED

STATE OF TEXAS
JOHANNA TORRES
130063
LICENSED
PROFESSIONAL ENGINEER
johannatorres
8/1/2023

Texas Department of Transportation
©2023

JONES|CARTER
Texas Board of Professional Engineers Registration No. F-23290
4350 Lockhill Selma Rd, Suite 100• San Antonio, Texas 78249 •210.494.5511

SH 96, FM 270
TRAFFIC CONTROL PLAN
PHASE 1
STA 365+00 TO STA 385+00

SHEET 7 OF 7

DRAWN	FED.RD. DIV.NO.	FEDERAL AID PROJECT NO.		HIGHWAY NO.
AA	06			FM 270, ETC
DESIGNED	STATE	DIST.	COUNTY	SHEET NO.
JT	TEXAS	HOUSTON	GALVESTON	34
CHECKED	CONT.	SECT.	JOB	
NG	0912	73	215	
APPROVED				
DD				

PLOTDRIVER: LCBF.pltcfg
PENTABLE: LCBF.tbl
DATE: 8/1/2023 11:30:44 PM USER: sss
FILE: c:\bms\pwe101-01\stella.staver-scull\dms22653\LCBF_TCP_PH1_07.dgn

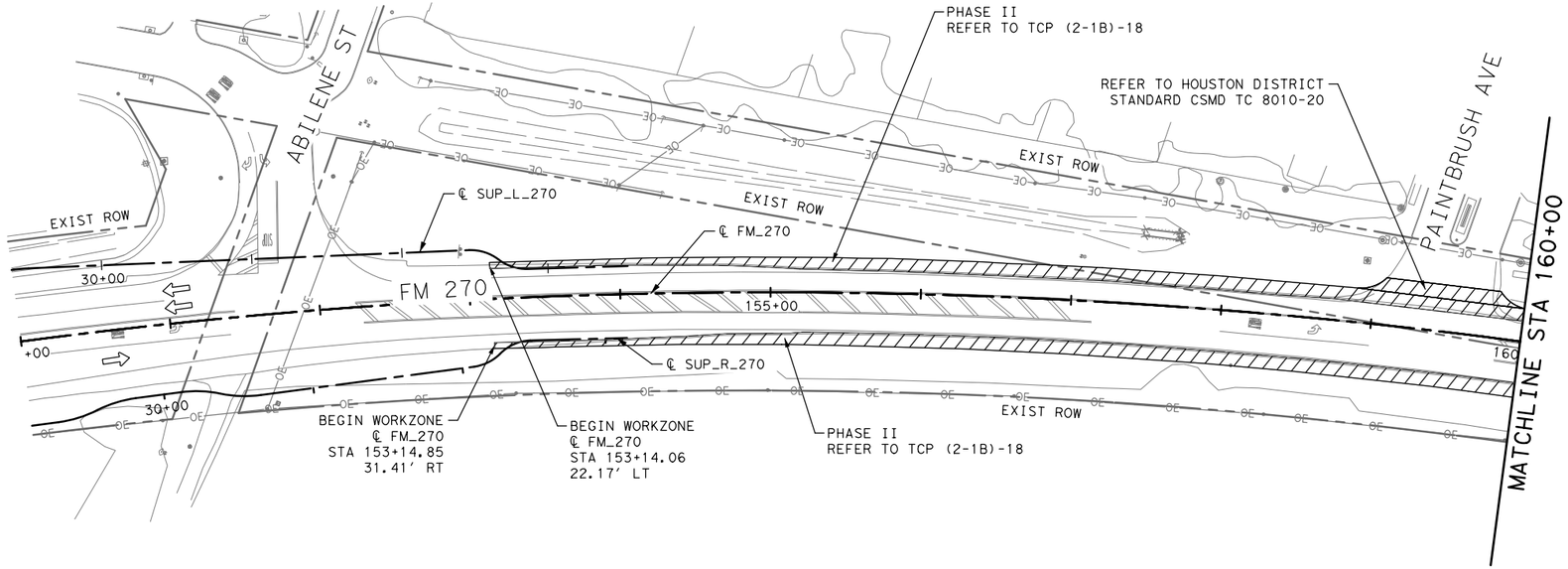

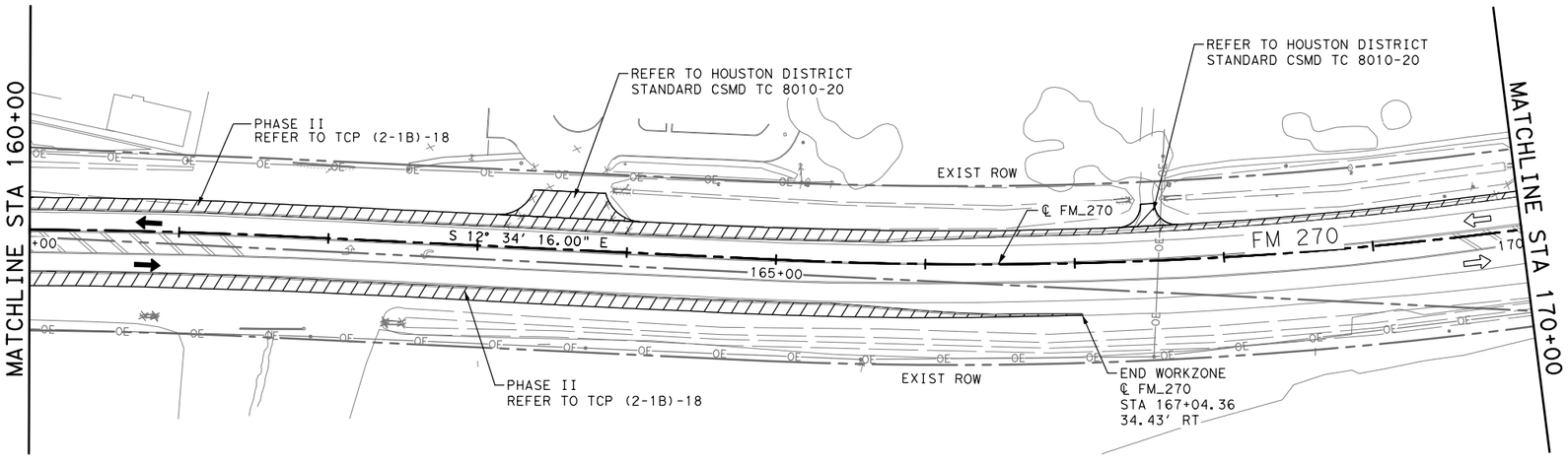

0' 25' 50' 100'

N

LEGEND:

- PROPOSED CONSTRUCTION THIS PHASE
- PREVIOUSLY CONSTRUCTED
- WETLANDS
- EXIST TRAFFIC FLOW
- (A) SIDEWALK CLOSED
  R9-9
  24x12

NO.	DATE	REVISION	APPROVED

STATE OF TEXAS
JOHANNA TORRES
130063
LICENSED
PROFESSIONAL ENGINEER
johannatorres
8/1/2023

Texas Department of Transportation
©2023

JONES|CARTER
Texas Board of Professional Engineers Registration No. F-23290
4350 Lockhill Selma Rd, Suite 100• San Antonio, Texas 78249 •210.494.5511

SH 96, FM 270
TRAFFIC CONTROL PLAN
PHASE 2
STA 150+00 TO STA 170+00

SHEET 1 OF 6

DRAWN	FED.RD. DIV.NO.	FEDERAL AID PROJECT NO.		HIGHWAY NO.
AA	06			FM 270, ETC
DESIGNED	STATE	DIST.	COUNTY	SHEET NO.
JT	TEXAS	HOUSTON	GALVESTON	35
CHECKED	CONT.	SECT.	JOB	
NG	0912	73	215	
APPROVED				
DD				

PLOTDRIVER: LCBF.pltcfg
PENTABLE: LCBF.tbl
DATE: 8/1/2023 11:30:55 PM USER: sss
FILE: c:\bms\pwe101-01\stela.staver-scull\dms22653\LCBF_TCP_PH2_02.dgn

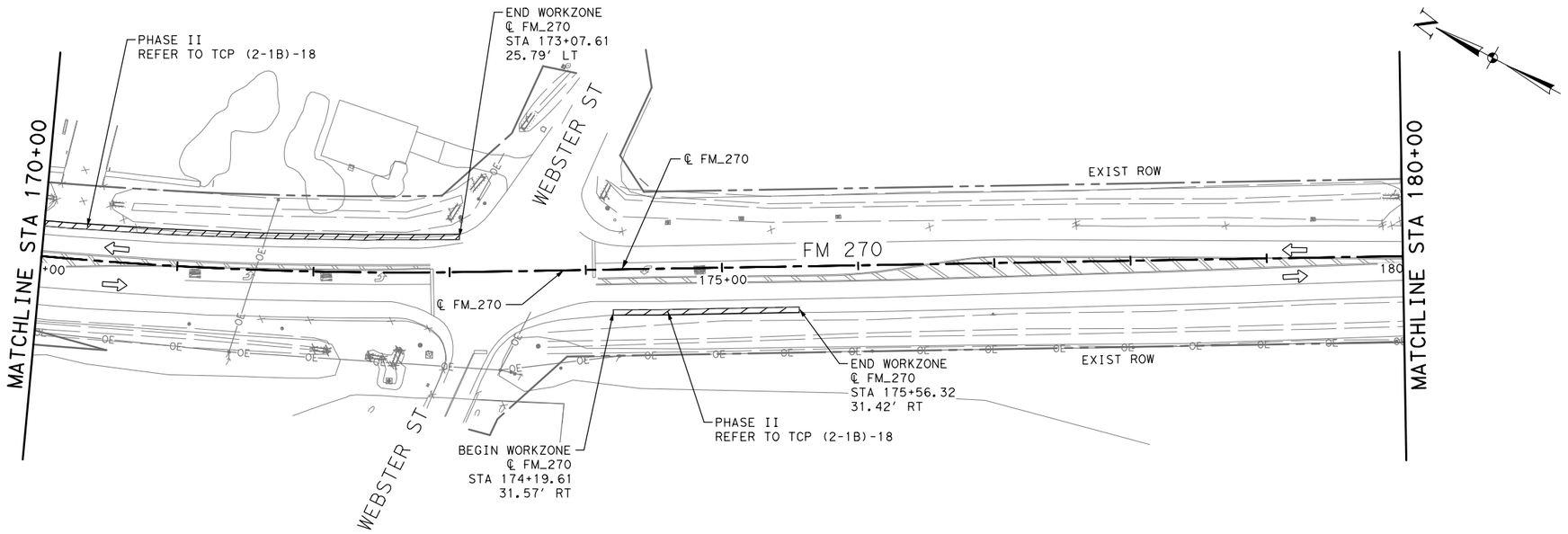

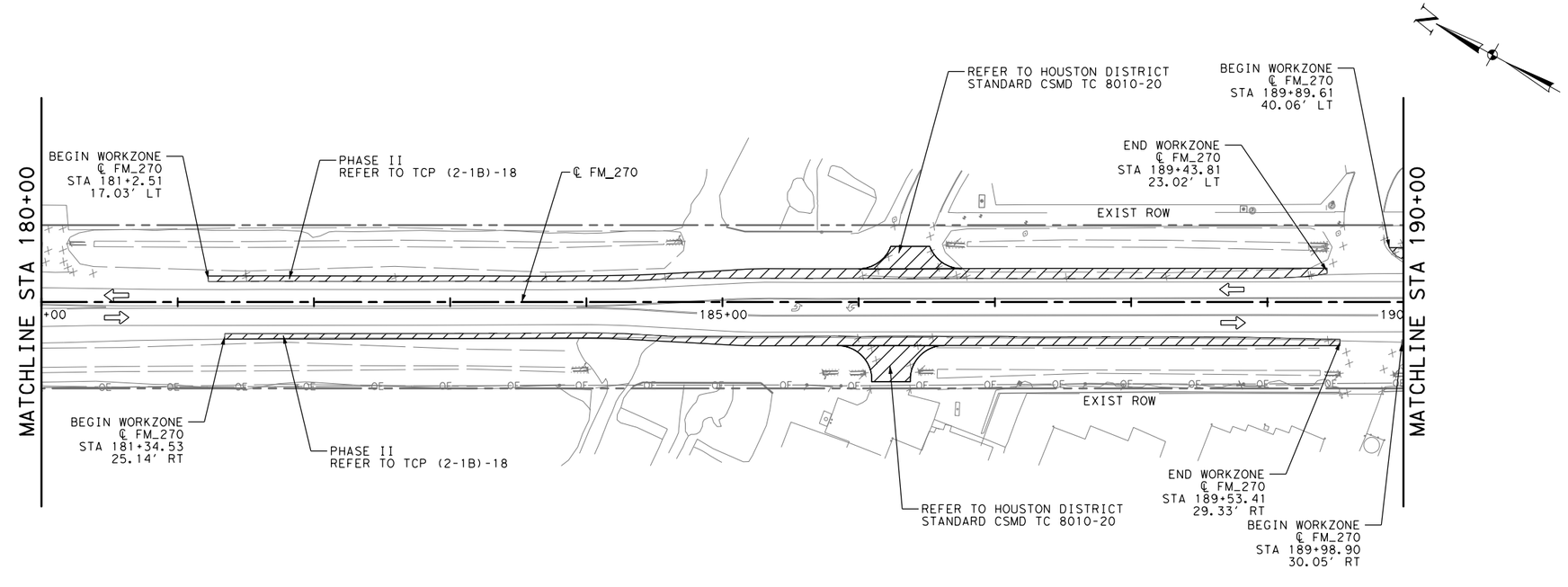

0' 25' 50' 100'

LEGEND:

- PROPOSED CONSTRUCTION THIS PHASE
- PREVIOUSLY CONSTRUCTED
- WETLANDS
- EXIST TRAFFIC FLOW
- (A) SIDEWALK CLOSED — R9-9, 24x12

NO.	DATE	REVISION	APPROVED

STATE OF TEXAS
JOHANNA TORRES
130063
LICENSED PROFESSIONAL ENGINEER
johannatorres
8/1/2023

Texas Department of Transportation
©2023

JONES|CARTER
Texas Board of Professional Engineers Registration No. F-23290
4350 Lockhill Selma Rd, Suite 100• San Antonio, Texas 78249 •210.494.5511

SH 96, FM 270
TRAFFIC CONTROL PLAN
PHASE 2
STA 170+00 TO STA 190+00

SHEET 2 OF 6

DRAWN	FED.RD. DIV.NO.	FEDERAL AID PROJECT NO.		HIGHWAY NO.
AA	06			FM 270, ETC
DESIGNED	STATE	DIST.	COUNTY	SHEET NO.
JT	TEXAS	HOUSTON	GALVESTON	36
CHECKED	CONT.	SECT.	JOB	
NG	0912	73	215	
APPROVED				
DD				

PLOTDRIVER: LCBF.pltcfg
PENTABLE: LCBF.tbl
DATE: 8/1/2023 11:30:56 PM USER: sss
FILE: c:\bms\pwe101-01\stela.staver-scull\dms22653\LCBF_TCP_PH2_03.dgn

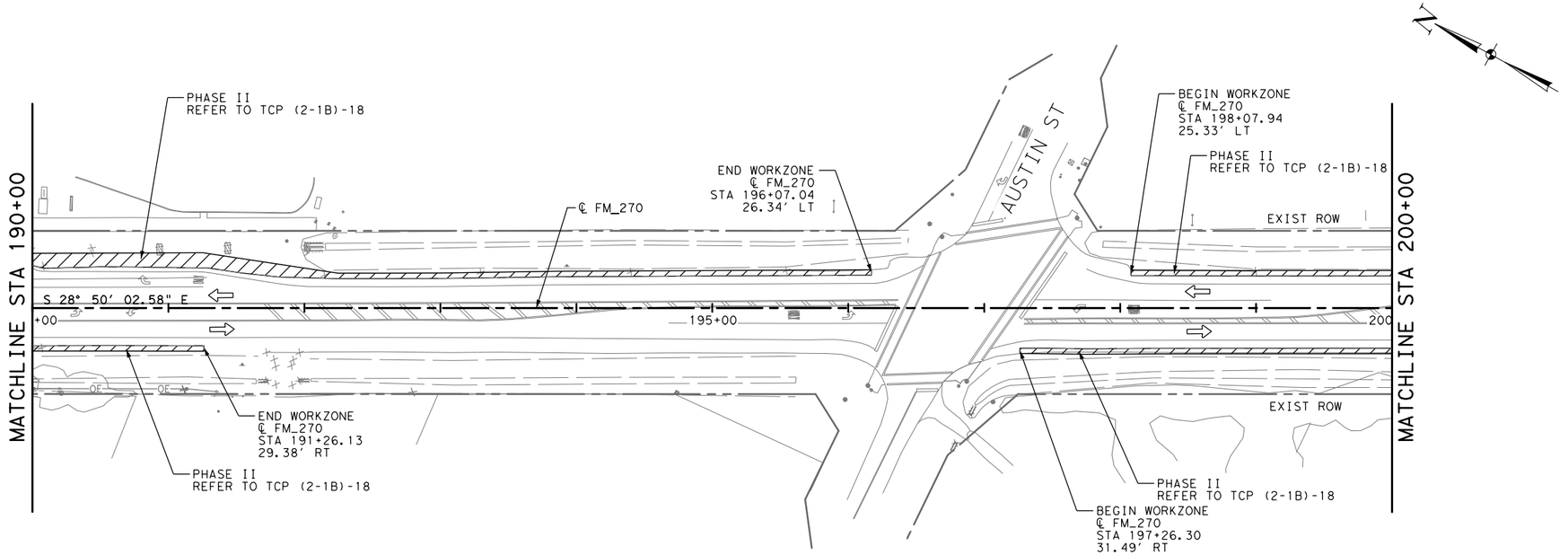

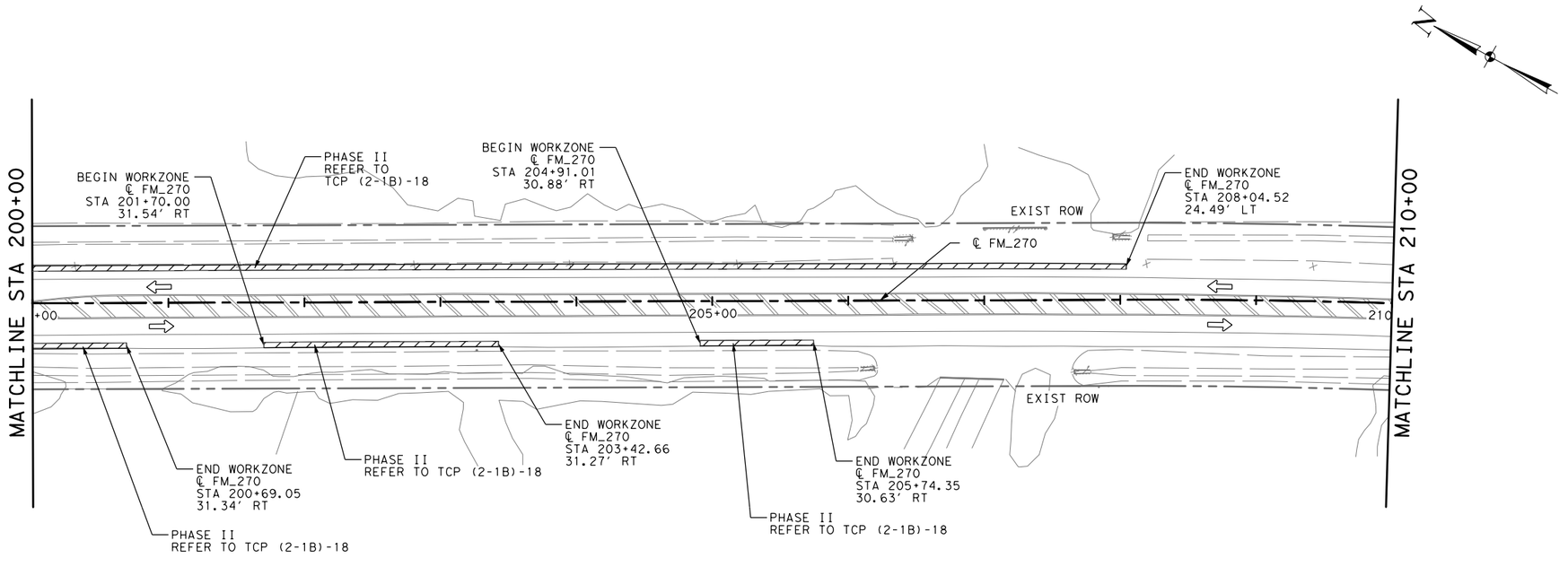

0' 25' 50' 100'

LEGEND:

- PROPOSED CONSTRUCTION THIS PHASE
- PREVIOUSLY CONSTRUCTED
- WETLANDS
- EXIST TRAFFIC FLOW
- (A) SIDEWALK CLOSED
  R9-9
  24x12

NO.	DATE	REVISION	APPROVED

JOHANNA TORRES
130063
LICENSED
PROFESSIONAL ENGINEER
STATE OF TEXAS
johannatorres
8/1/2023

Texas Department of Transportation
©2023

JONES|CARTER
Texas Board of Professional Engineers Registration No. F-23290
4350 Lockhill Selma Rd, Suite 100•San Antonio, Texas 78249•210.494.5511

SH 96, FM 270
TRAFFIC CONTROL PLAN
PHASE 2

STA 190+00 TO STA 210+00

SHEET 3 OF 6

DRAWN	FED.RD. DIV.NO.	FEDERAL AID PROJECT NO.		HIGHWAY NO.
AA	06			FM 270, ETC
DESIGNED	STATE	DIST.	COUNTY	SHEET NO.
JT	TEXAS	HOUSTON	GALVESTON	37
CHECKED	CONT.	SECT.	JOB	
NG	0912	73	215	
APPROVED				
DD				

DATE:8/1/2023 11:30:57 PM USER:sss
FILE:c:\dms\pwe101-01\stela.staver-scull\dms22653\LCBF_TCP_PH2_04.dgn
PLOTDRIVER: LCBF.pltcfg
PENTABLE: LCBF.tbl

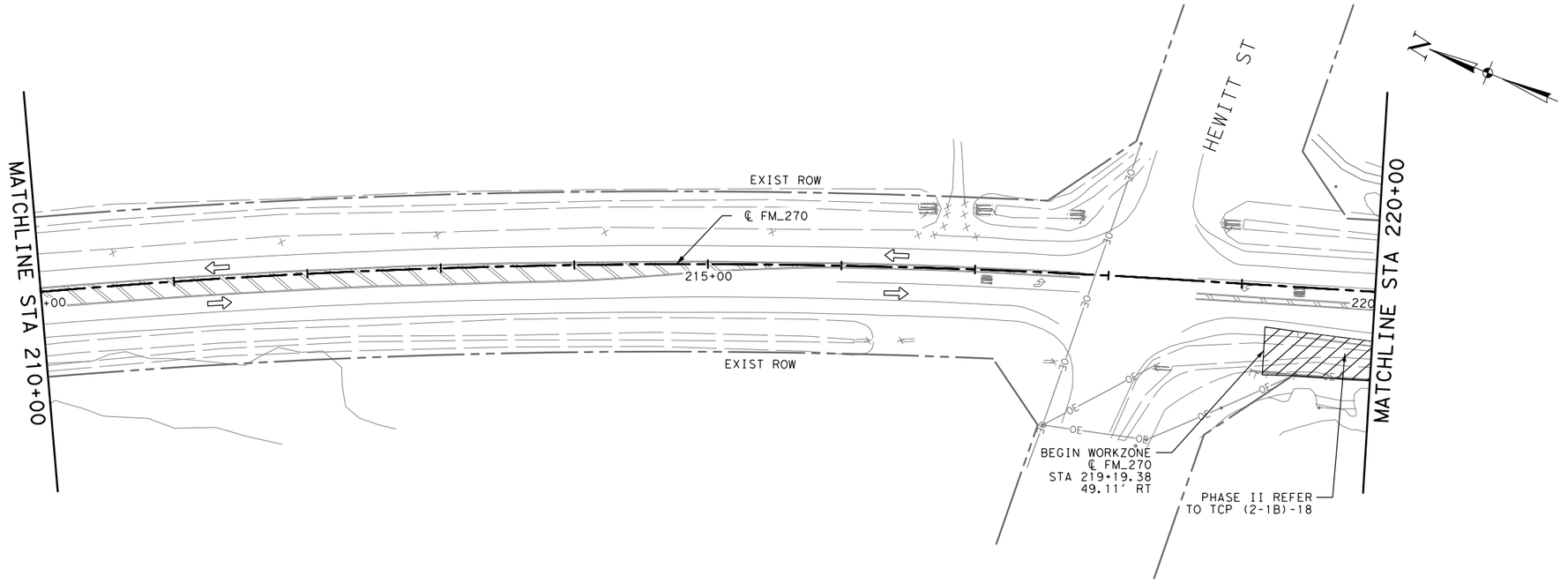

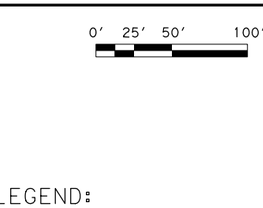

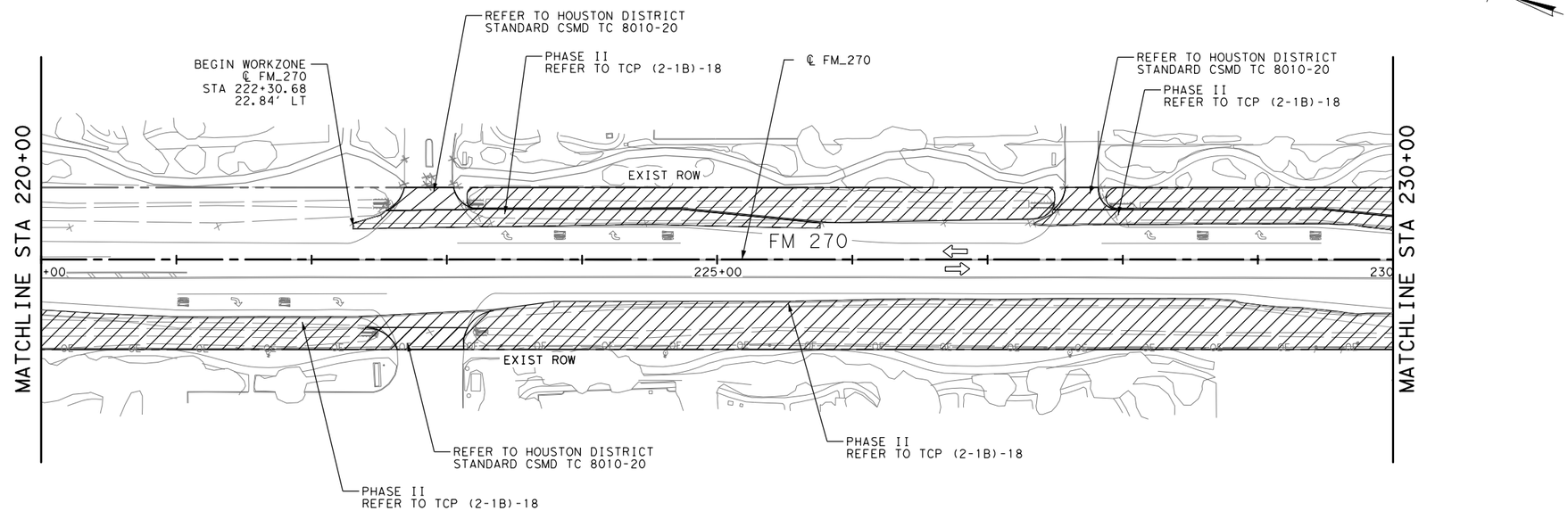

NO.	DATE	REVISION	APPROVED

STATE OF TEXAS
JOHANNA TORRES
130063
LICENSED PROFESSIONAL ENGINEER
johannatorres
8/1/2023

Texas Department of Transportation
©2023

JONES|CARTER
Texas Board of Professional Engineers Registration No. F-23290
4350 Lockhill Selma Rd, Suite 100• San Antonio, Texas 78249 •210.494.5511

SH 96, FM 270
TRAFFIC CONTROL PLAN
PHASE 2
STA 210+00 TO STA 230+00

SHEET 4 OF 6

DRAWN	FED.RD. DIV.NO.	FEDERAL AID PROJECT NO.		HIGHWAY NO.
AA	06			FM 270, ETC
DESIGNED	STATE	DIST.	COUNTY	SHEET NO.
JT	TEXAS	HOUSTON	GALVESTON	38
CHECKED	CONT.	SECT.	JOB	
NG	0912	73	215	
APPROVED				
DD				

PLOTDRIVER: LCBF.pltcfg PENTABLE: LCBF.tbl

DATE:8/1/2023 11:30:58 PM USER:sss
FILE:c:\bms\pwe101-01\stela.staver-scull\dms22653\LCBF_TCP_PH2_05.dgn

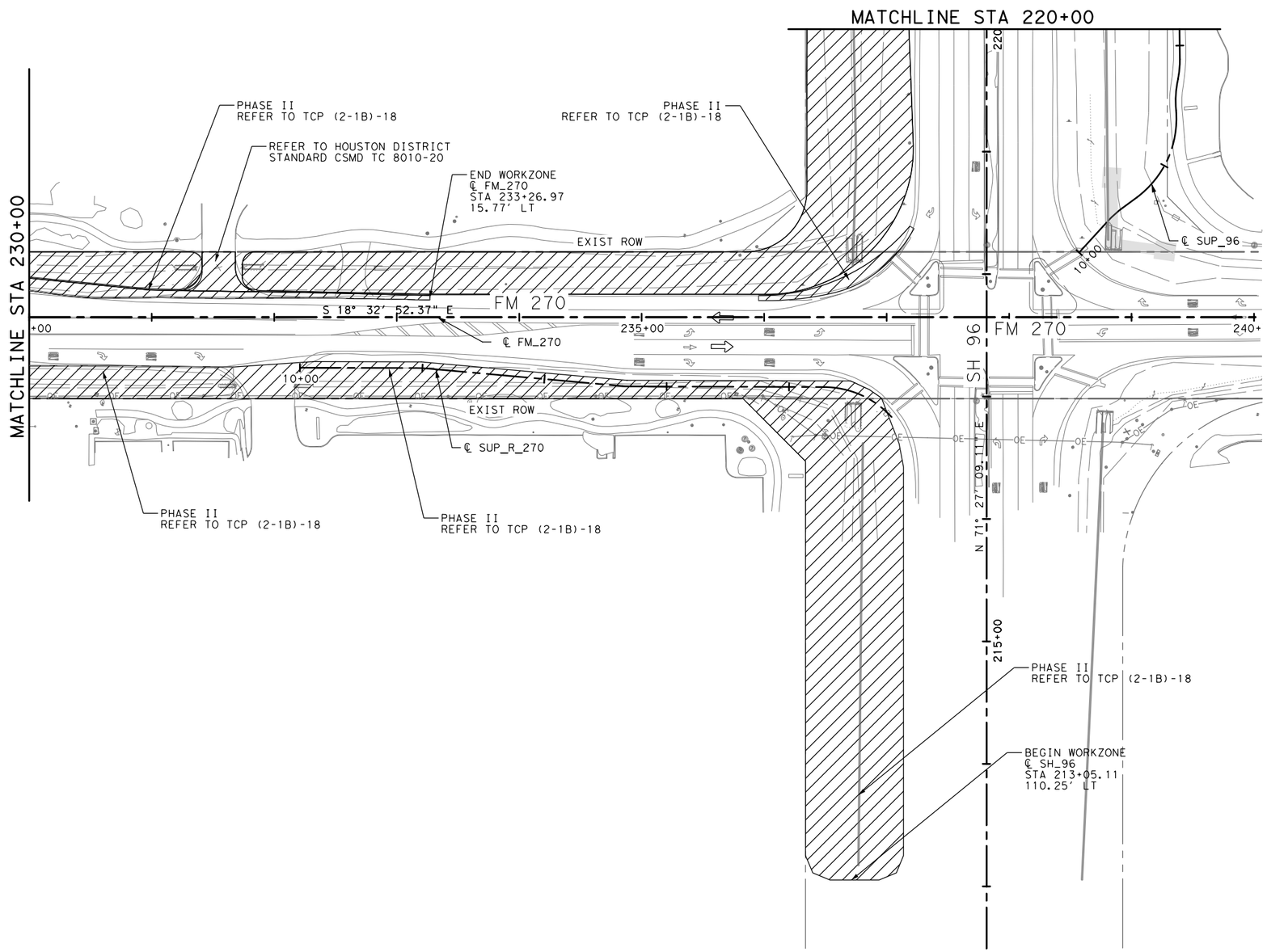

0' 25' 50' 100'

LEGEND:

- PROPOSED CONSTRUCTION THIS PHASE
- PREVIOUSLY CONSTRUCTED
- WETLANDS
- EXIST TRAFFIC FLOW
- (A) SIDEWALK CLOSED — R9-9, 24x12

NO.	DATE	REVISION	APPROVED

STATE OF TEXAS
JOHANNA TORRES
130063
LICENSED
PROFESSIONAL ENGINEER
johannatorres
8/1/2023

Texas Department of Transportation
©2023

JONES|CARTER
Texas Board of Professional Engineers Registration No. F-23290
4350 Lockhill Selma Rd, Suite 100• San Antonio, Texas 78249 • 210.494.5511

SH 96, FM 270
TRAFFIC CONTROL PLAN
PHASE 2

STA 230+00 TO SH 96, SH 96 TO STA 220+00

SHEET 5 OF 6

DRAWN	FED.RD. DIV.NO.	FEDERAL AID PROJECT NO.		HIGHWAY NO.
AA	06			FM 270, ETC
DESIGNED	STATE	DIST.	COUNTY	SHEET NO.
JT	TEXAS	HOUSTON	GALVESTON	39
CHECKED	CONT.	SECT.	JOB	
NG	0912	73	215	
APPROVED				
DD				

PENTABLE: LCBF.tbl
PLOTDRIVER: LCBF.pltcfg
DATE: 8/1/2023 11:31:01 PM USER: sss
FILE: c:\dms\pwe101-01\stela.staver-scull\dms22653\LCBF_TCP_PH2_06.dgn

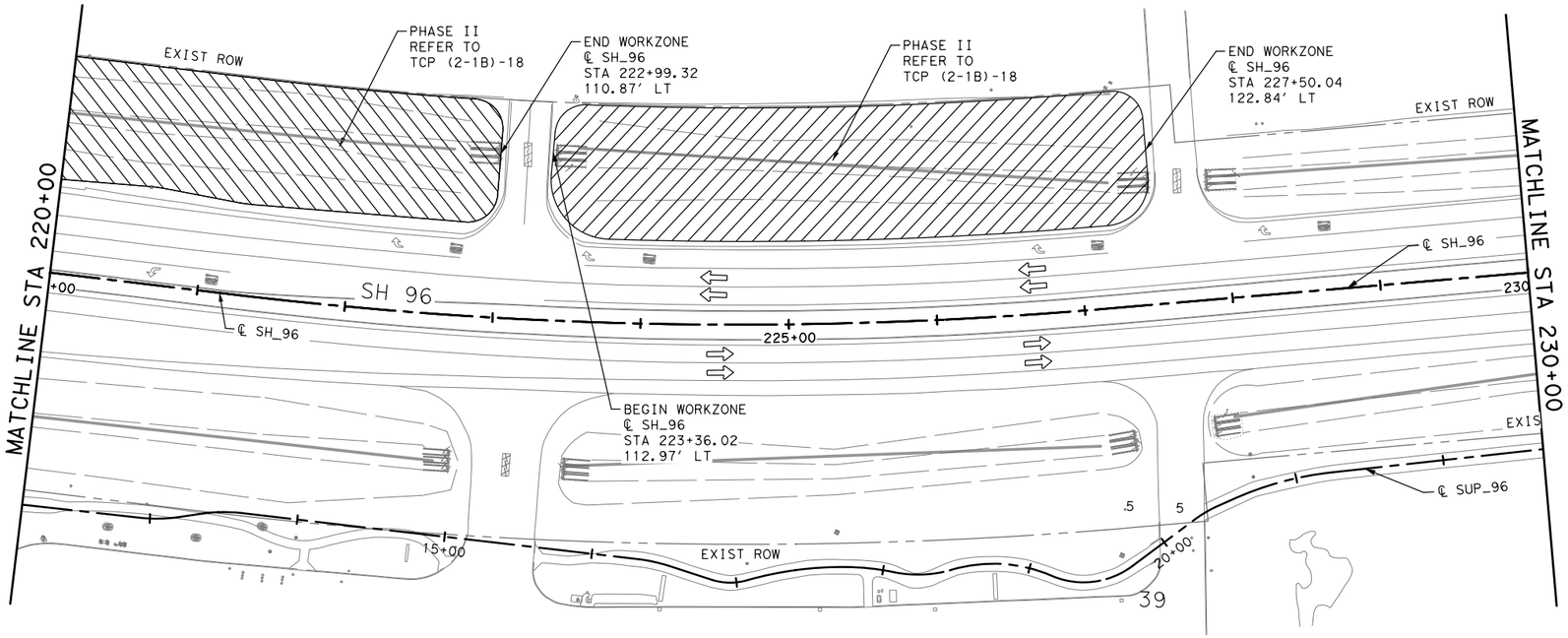

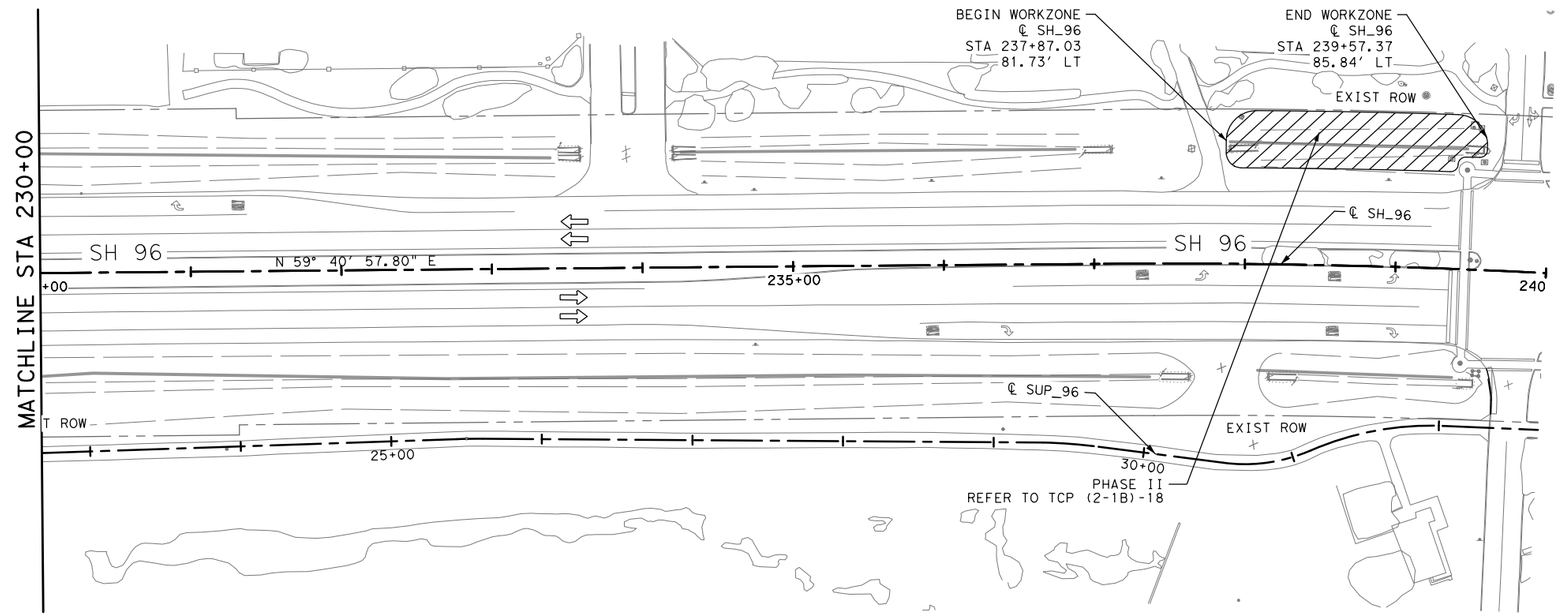

0' 25' 50' 100'

LEGEND:

- PROPOSED CONSTRUCTION THIS PHASE
- PREVIOUSLY CONSTRUCTED
- WETLANDS
- EXIST TRAFFIC FLOW
- (A) SIDEWALK CLOSED
  R9-9
  24x12

NO.	DATE	REVISION	APPROVED

STATE OF TEXAS
JOHANNA TORRES
130063
LICENSED
PROFESSIONAL ENGINEER
johanna torres
8/1/2023

Texas Department of Transportation
©2023

JONES|CARTER
Texas Board of Professional Engineers Registration No. F-23290
4350 Lockhill Selma Rd, Suite 100 • San Antonio, Texas 78249 • 210.494.5511

SH 96, FM 270
TRAFFIC CONTROL PLAN
PHASE 2
STA 220+00 TO STA 240+00

SHEET 6 OF 6

DRAWN	FED.RD. DIV.NO.	FEDERAL AID PROJECT NO.		HIGHWAY NO.
AA	06			FM 270, ETC
DESIGNED	STATE	DIST.	COUNTY	SHEET NO.
JT	TEXAS	HOUSTON	GALVESTON	40
CHECKED	CONT.	SECT.	JOB	
NG	0912	73	215	
APPROVED				
DD				

DATE:8/1/2023 11:31:03 PM USER:sss
FILE:c:\bms\pwe101-01\stela.staver-scull\dms22653\LCBF_TCP_PH2_07.dgn
PLOTDRIVER:LCBF.pltcfg PENTABLE:LCBF.tbl

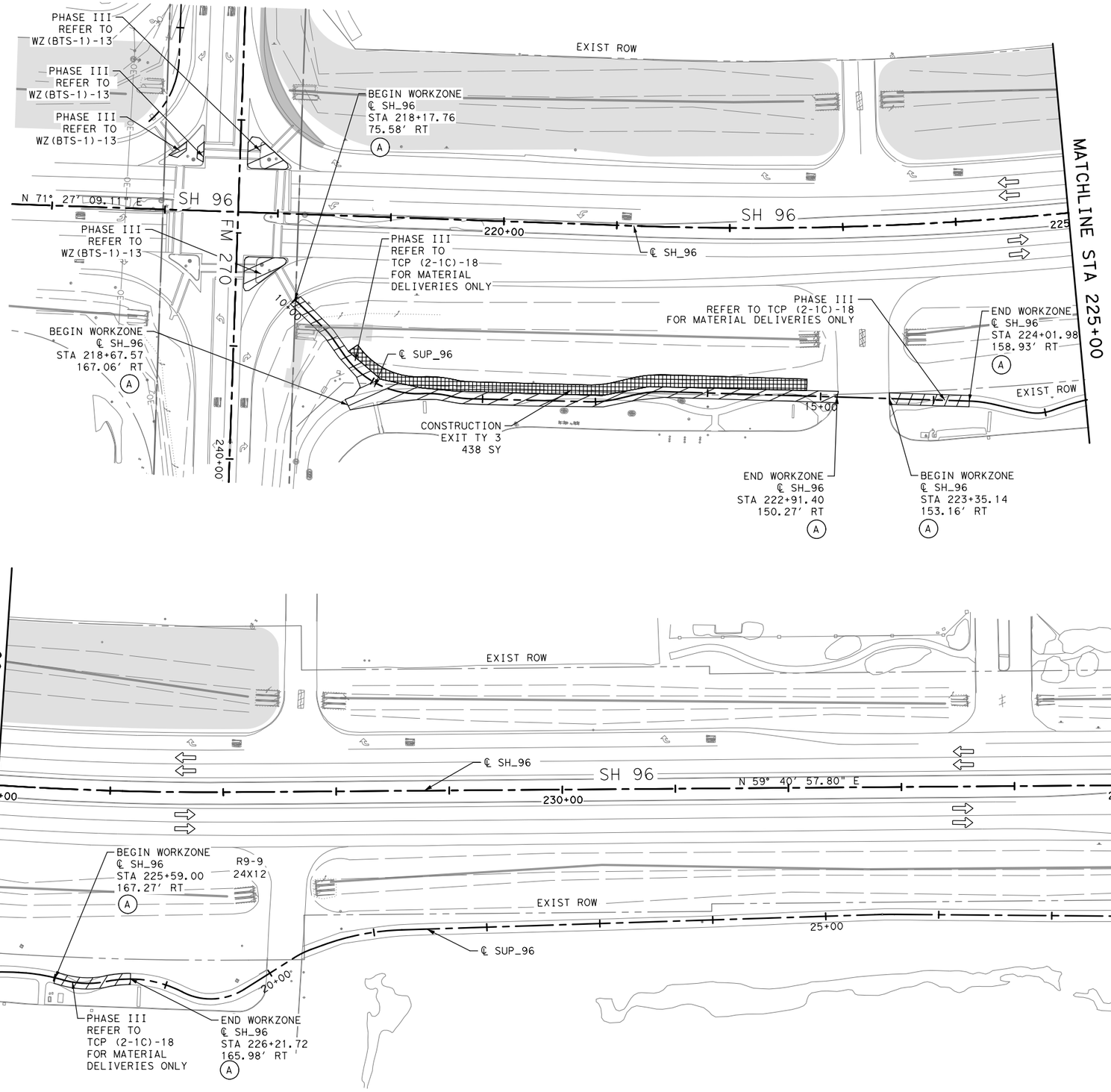

NO.	DATE	REVISION	APPROVED

STATE OF TEXAS
JOHANNA TORRES
130063
LICENSED
PROFESSIONAL ENGINEER
johannatorres
8/1/2023

©2023

Texas Department of Transportation

JONES|CARTER
Texas Board of Professional Engineers Registration No. F-23290
4350 Lockhill Selma Rd, Suite 100 • San Antonio, Texas 78249 • 210.494.5511

SH 96, FM 270
TRAFFIC CONTROL PLAN
PHASE 3

216+00 TO STA 235+00

SHEET 1 OF 10

DRAWN	FED. RD. DIV. NO.	FEDERAL AID PROJECT NO.		HIGHWAY NO.
AA	06			FM 270, ETC
DESIGNED	STATE	DIST.	COUNTY	SHEET NO.
JT	TEXAS	HOUSTON	GALVESTON	41
CHECKED	CONT.	SECT.	JOB	
NG	0912	73	215	
APPROVED				
DD				

PENTABLE:LCBF.tbl
PLOTDRIVER:LCBF.pltcfg
DATE:8/1/2023 11:31:08 PM USER:sss
FILE:c:\bms\pwe101-01\stela.staver-scull\dms22653\LCBF_TCP_PH3_01.dgn

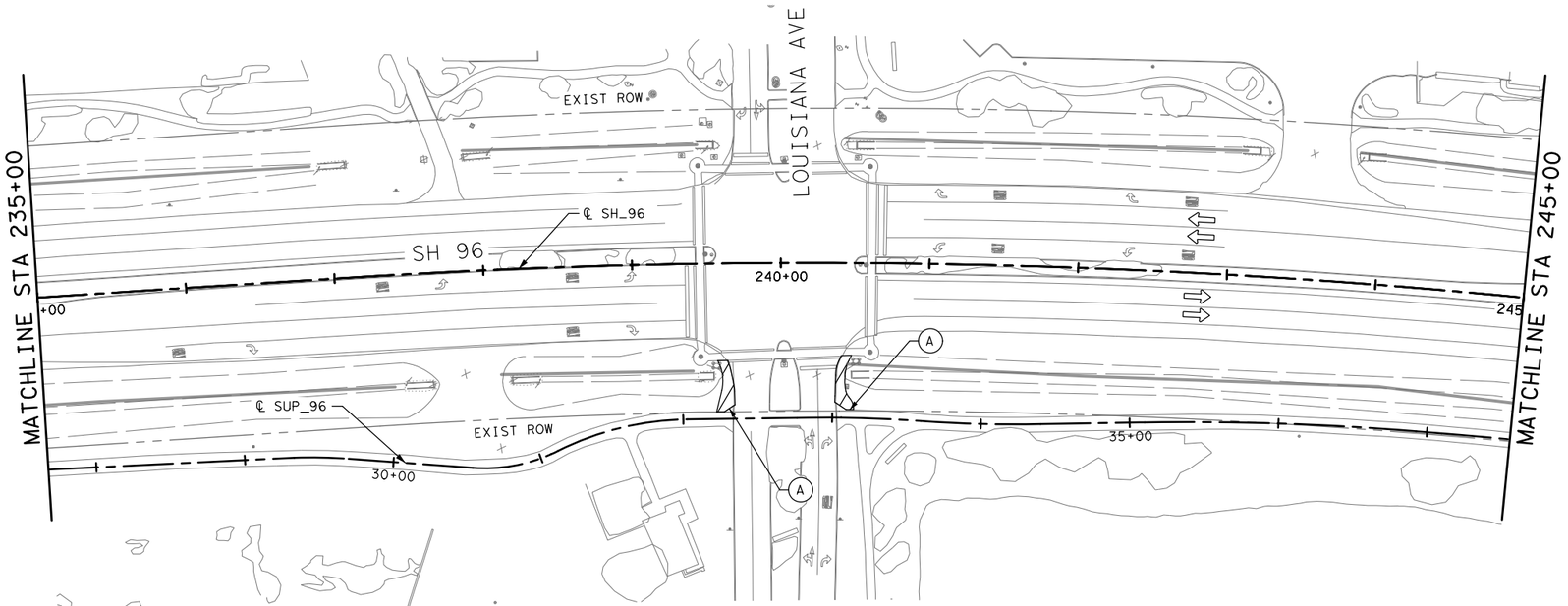

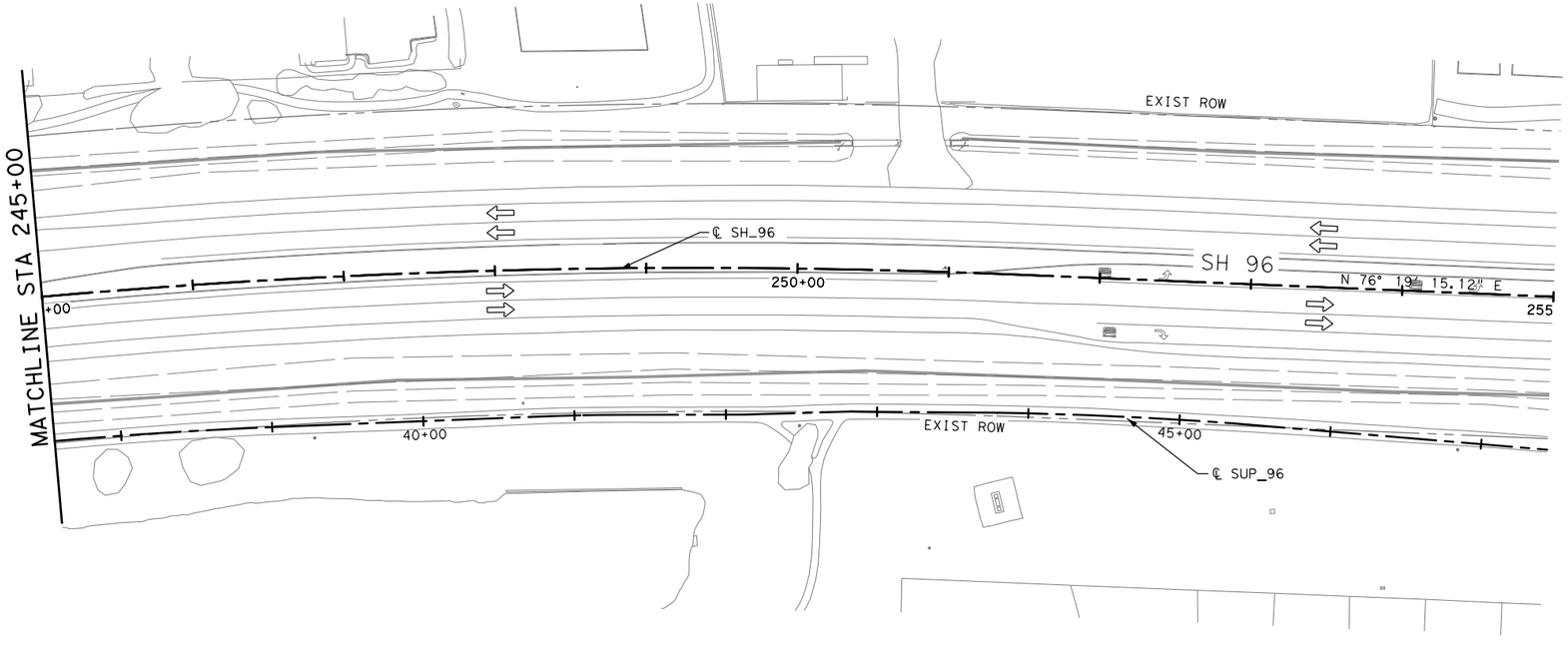

0′ 25′ 50′ 100′

LEGEND:

- PROPOSED CONSTRUCTION THIS PHASE
- TY 3 CONSTRUCTION EXIT
- PREVIOUSLY CONSTRUCTED
- WETLANDS
- EXIST TRAFFIC FLOW
- (A) SIDEWALK CLOSED
  R9-9
  24x12

NO.	DATE	REVISION	APPROVED

STATE OF TEXAS
JOHANNA TORRES
130063
LICENSED
PROFESSIONAL ENGINEER
johannatorres
8/1/2023

Texas Department of Transportation
©2023

JONES|CARTER
Texas Board of Professional Engineers Registration No. F-23290
4350 Lockhill Selma Rd, Suite 100•San Antonio, Texas 78249•210.494.5511

SH 96, FM 270
TRAFFIC CONTROL PLAN
PHASE 3
STA 235+00 TO STA 255+00

SHEET 2 OF 10

DRAWN	FED.RD. DIV.NO.	FEDERAL AID PROJECT NO.		HIGHWAY NO.
AA	06			FM 270, ETC
DESIGNED	STATE	DIST.	COUNTY	SHEET NO.
JT	TEXAS	HOUSTON	GALVESTON	42
CHECKED	CONT.	SECT.	JOB	
NG	0912	73	215	
APPROVED				
DD				

PLOTDRIVER: LCBF.pltcfg PENTABLE: LCBF.tbl
DATE:8/1/2023 11:31:12 PM USER:sss
FILE:c:\bms\pwe101-01\stela.staver-scull\dms22653\LCBF_TCP_PH3_01a.dgn

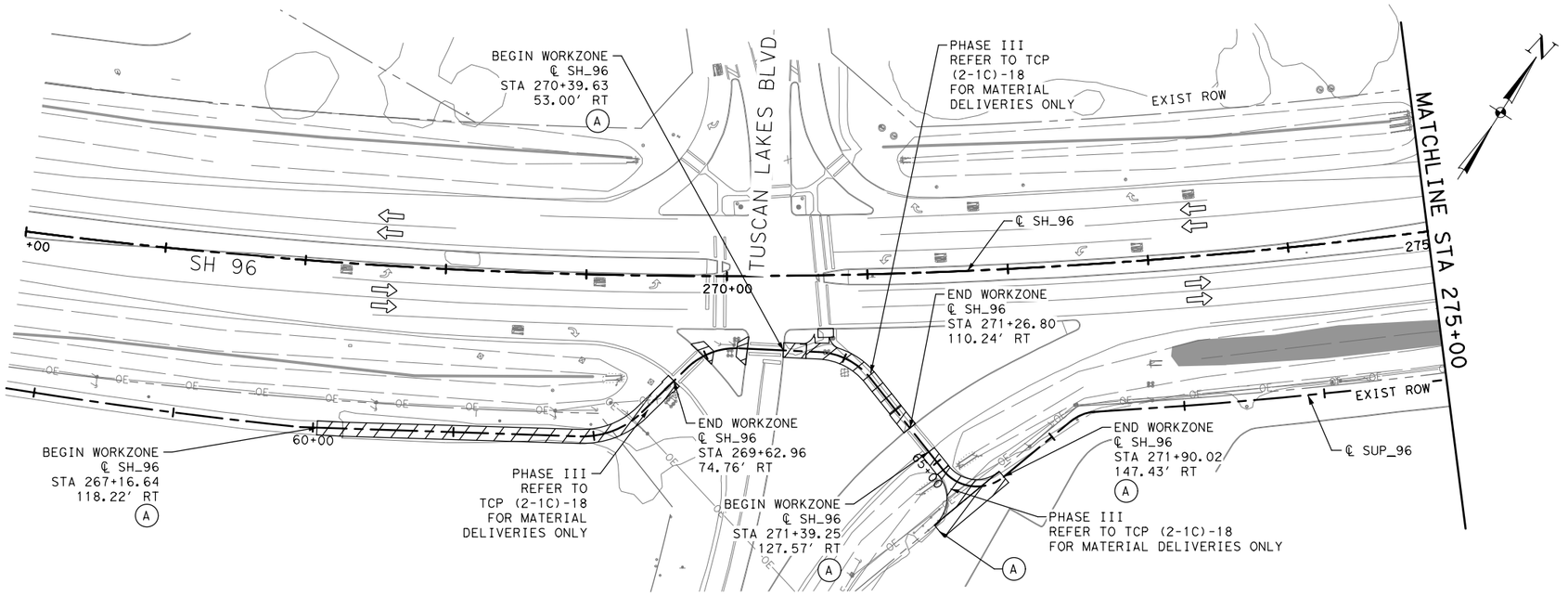

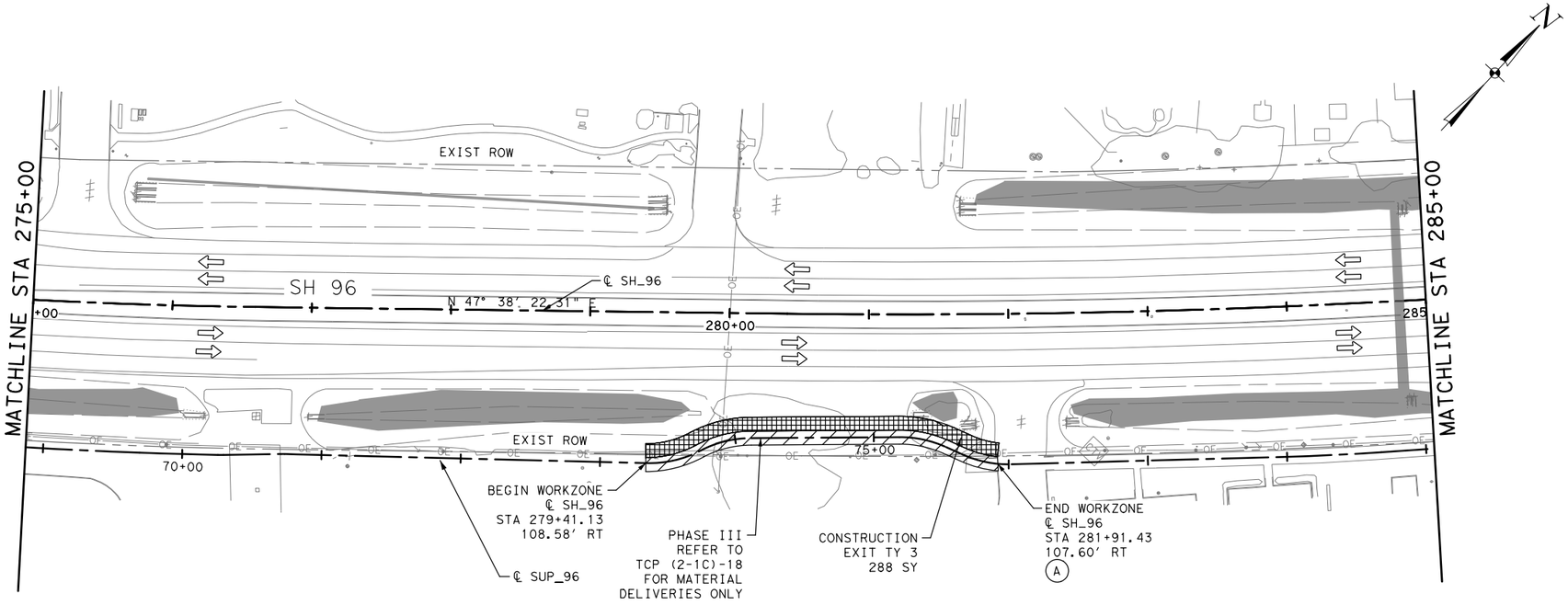

0' 25' 50' 100'

LEGEND:

- PROPOSED CONSTRUCTION THIS PHASE
- TY 3 CONSTRUCTION EXIT
- PREVIOUSLY CONSTRUCTED
- WETLANDS
- EXIST TRAFFIC FLOW
- (A) SIDEWALK CLOSED
  R9-9
  24x12

NO.	DATE	REVISION	APPROVED

STATE OF TEXAS
JOHANNA TORRES
130063
LICENSED
PROFESSIONAL ENGINEER
johannatorres
8/1/2023

Texas Department of Transportation
©2023

JONES|CARTER
Texas Board of Professional Engineers Registration No. F-23290
4350 Lockhill Selma Rd, Suite 100•San Antonio, Texas 78249•210.494.5511

SH 96, FM 270
TRAFFIC CONTROL PLAN
PHASE 3

STA 265+00 TO STA 285+00

SHEET 3 OF 10

DRAWN	FED. RD. DIV. NO.	FEDERAL AID PROJECT NO.		HIGHWAY NO.
AA	06			FM 270, ETC
DESIGNED	STATE	DIST.	COUNTY	SHEET NO.
JT	TEXAS	HOUSTON	GALVESTON	43
CHECKED	CONT.	SECT.	JOB	
NG	0912	73	215	
APPROVED				
DD				

PENTABLE:LCBF.tbl
PLOTDRIVER:LCBF.pltcfg
DATE:8/1/2023 11:31:15 PM USER:sss
FILE:c:\bms\pwe101-01\stela.staver-scull\dms22653\LCBF_TCP_PH3_02.dgn

DATE:8/1/2023 11:31:20 PM USER:sss
FILE:c:\dms\pwe101-01\stela.staver-scull\dms22653\LCBF_TCP_PH3_03.dgn
PLOTDRIVER:LCBF.pltcfg PENTABLE:LCBF.tbl

0′ 25′ 50′ 100′

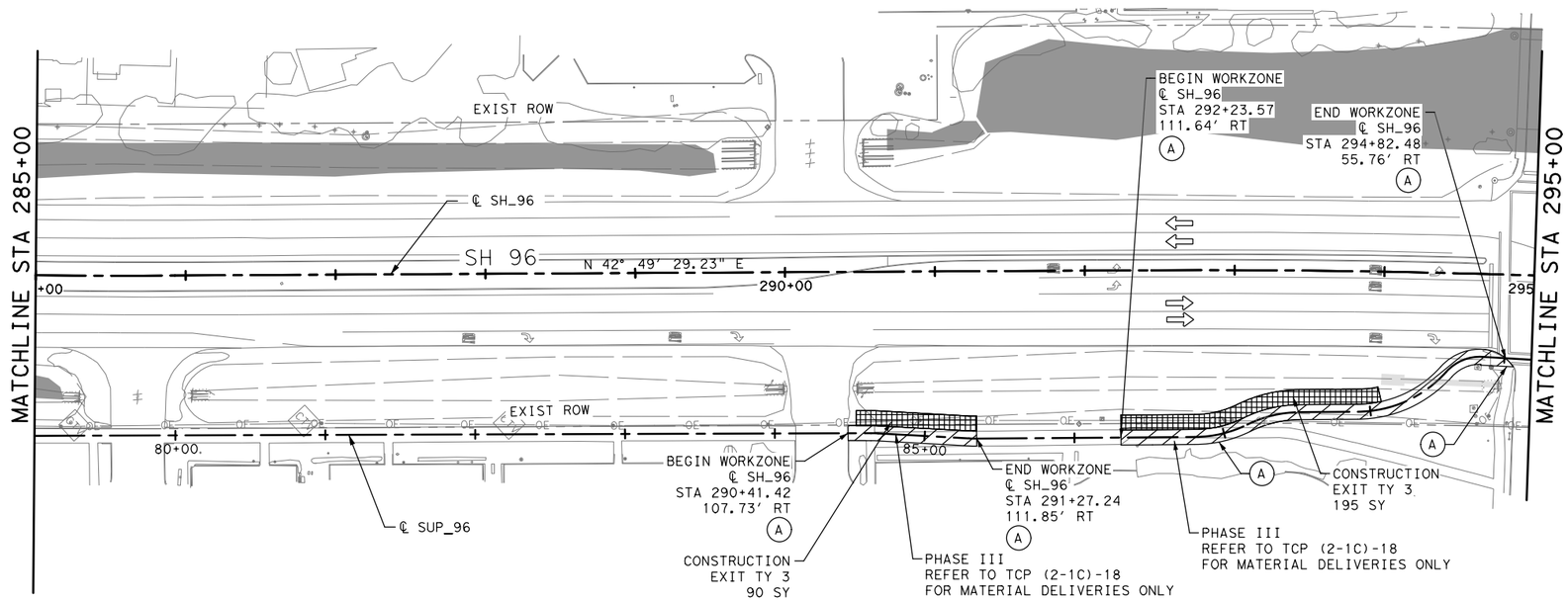

LEGEND:

- PROPOSED CONSTRUCTION THIS PHASE
- TY 3 CONSTRUCTION EXIT
- PREVIOUSLY CONSTRUCTED
- WETLANDS
- EXIST TRAFFIC FLOW
- (A) SIDEWALK CLOSED
  R9-9
  24x12

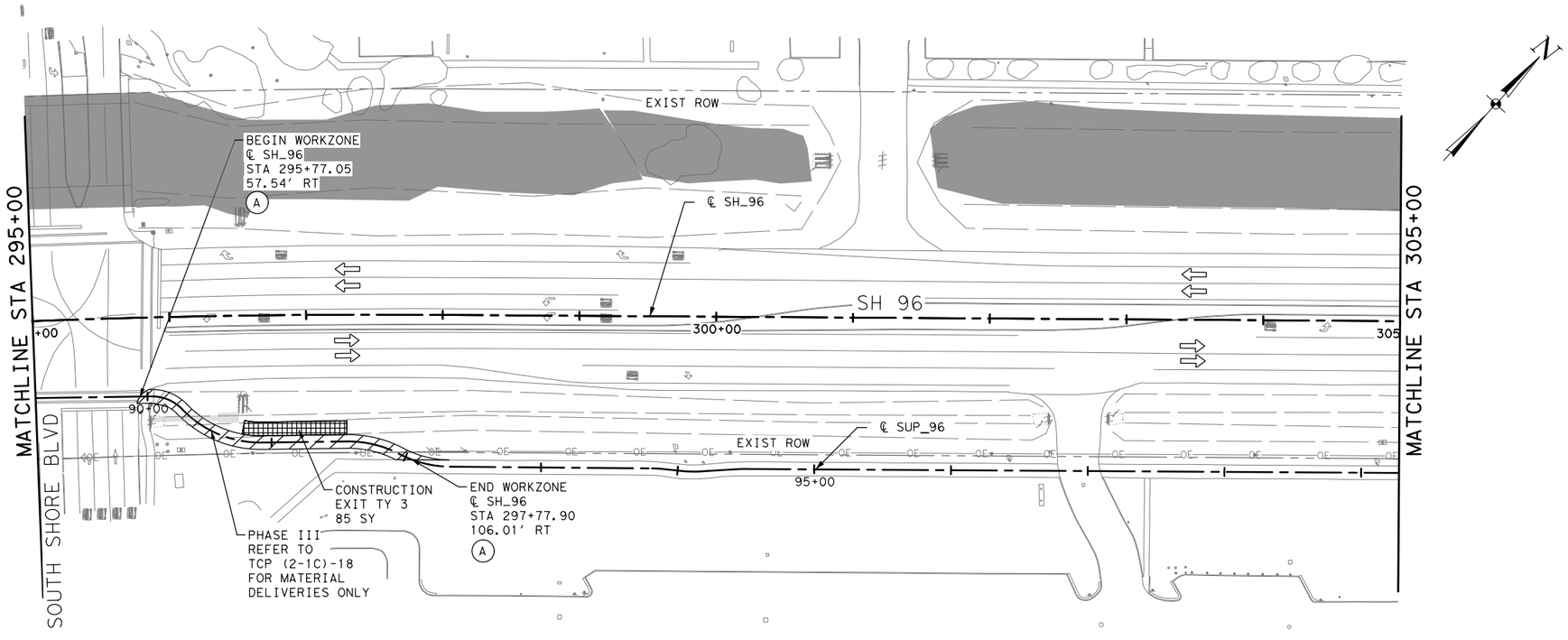

NO.	DATE	REVISION	APPROVED

STATE OF TEXAS
JOHANNA TORRES
130063
LICENSED
PROFESSIONAL ENGINEER
johannatorres
8/1/2023

Texas Department of Transportation
©2023

JONES|CARTER
Texas Board of Professional Engineers Registration No. F-23290
4350 Lockhill Selma Rd, Suite 100• San Antonio, Texas 78249 •210.494.5511

SH 96, FM 270
TRAFFIC CONTROL PLAN
PHASE 3

STA 285+00 TO STA 305+00

SHEET 4 OF 10

DRAWN	FED.RD. DIV.NO.	FEDERAL AID PROJECT NO.		HIGHWAY NO.
AA	06			FM 270, ETC
DESIGNED	STATE	DIST.	COUNTY	SHEET NO.
JT	TEXAS	HOUSTON	GALVESTON	44
CHECKED	CONT.	SECT.	JOB	
NG	0912	73	215	
APPROVED				
DD				

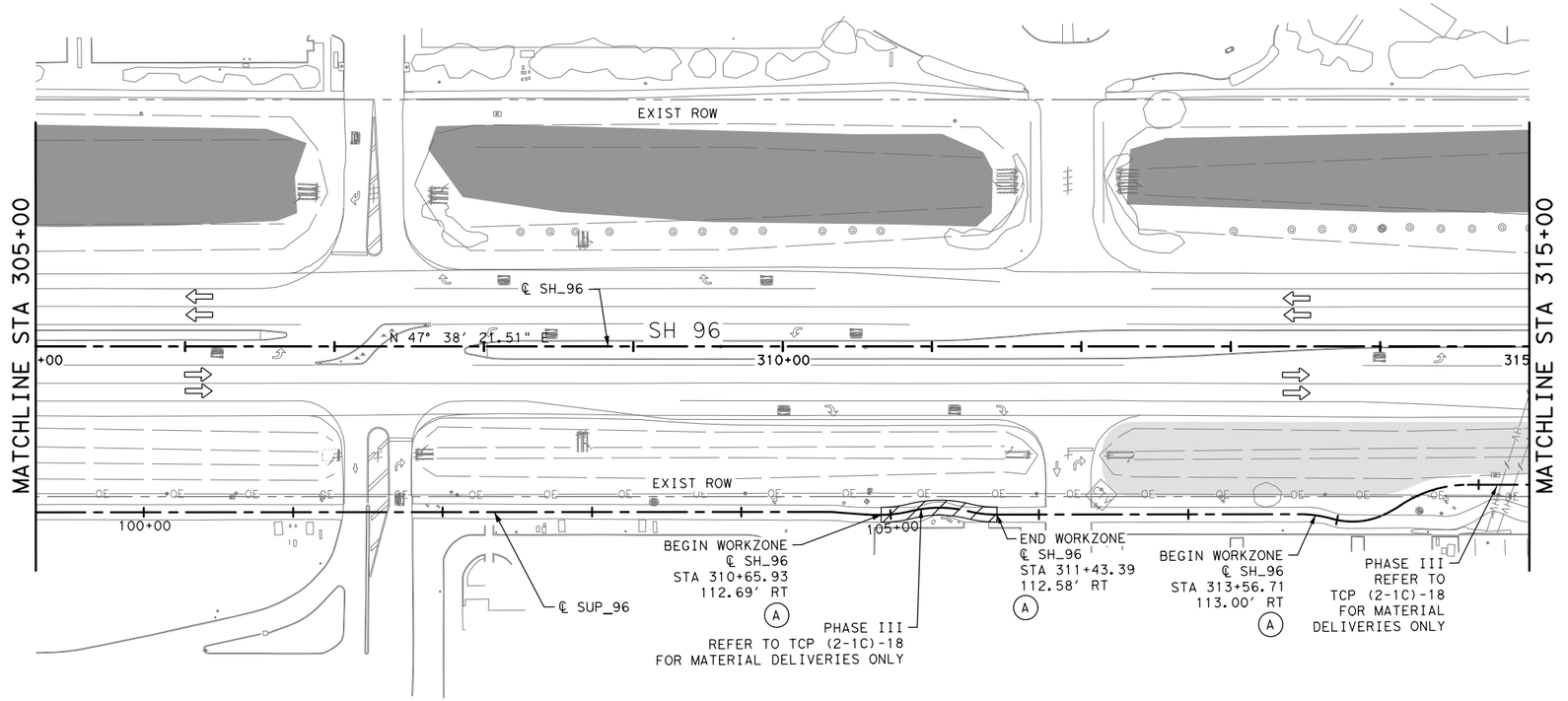

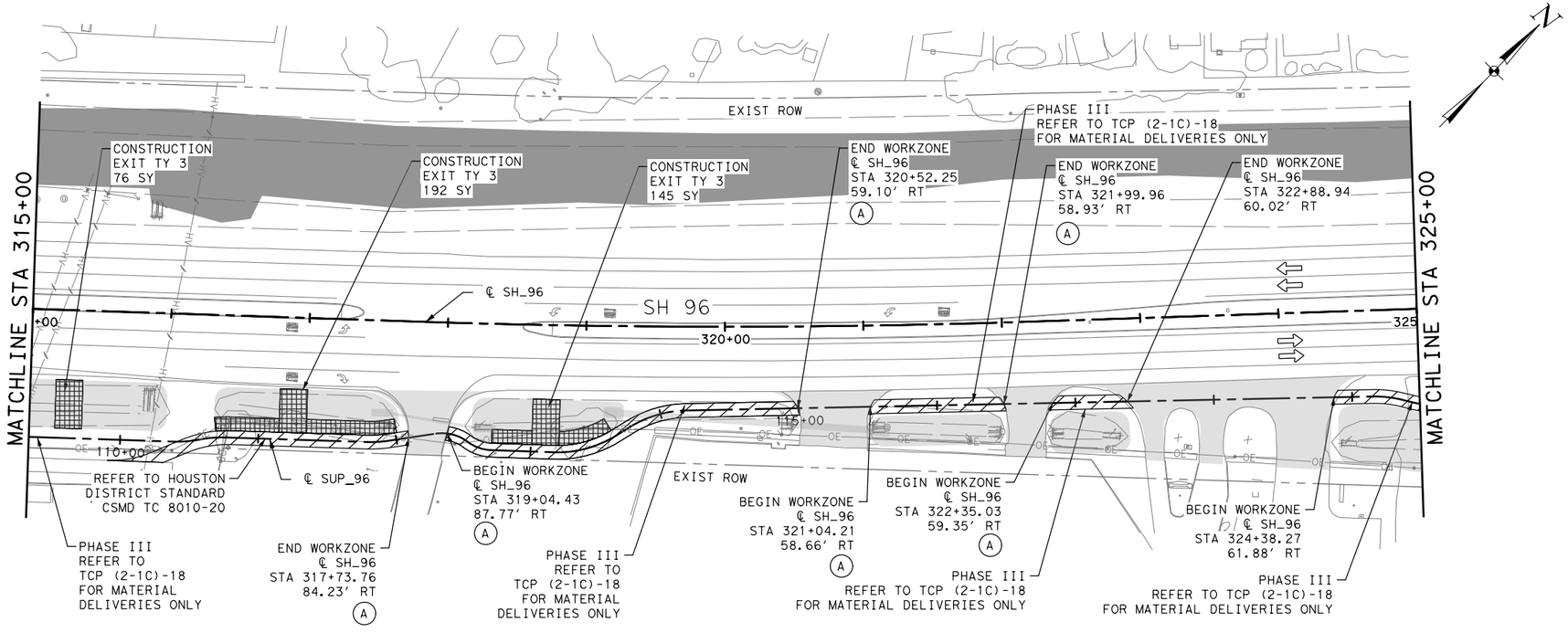

0' 25' 50' 100'

LEGEND:

- PROPOSED CONSTRUCTION THIS PHASE
- TY 3 CONSTRUCTION EXIT
- PREVIOUSLY CONSTRUCTED
- WETLANDS
- EXIST TRAFFIC FLOW
- (A) SIDEWALK CLOSED R9-9 24x12

NO.	DATE	REVISION	APPROVED

STATE OF TEXAS
JOHANNA TORRES
130063
LICENSED PROFESSIONAL ENGINEER
johannatorres
8/1/2023

Texas Department of Transportation
©2023

JONES|CARTER
Texas Board of Professional Engineers Registration No. F-23290
4350 Lockhill Selma Rd, Suite 100• San Antonio, Texas 78249 •210.494.5511

SH 96, FM 270
TRAFFIC CONTROL PLAN
PHASE 3
STA 305+00 TO STA 325+00

SHEET 5 OF 10

DRAWN	FED.RD. DIV.NO.	FEDERAL AID PROJECT NO.		HIGHWAY NO.
AA	06			FM 270, ETC
DESIGNED	STATE	DIST.	COUNTY	SHEET NO.
JT	TEXAS	HOUSTON	GALVESTON	45
CHECKED	CONT.	SECT.	JOB	
NG	0912	73	215	
APPROVED				
DD				

PENTABLE:LCBF.tbl
PLOTDRIVER:LCBF.pltcfg
DATE:8/1/2023 11:31:24 PM USER:sss
FILE:c:\dms\pwe101-01\stella.staver-scull\dms22653\LCBF_TCP_PH3_04.dgn

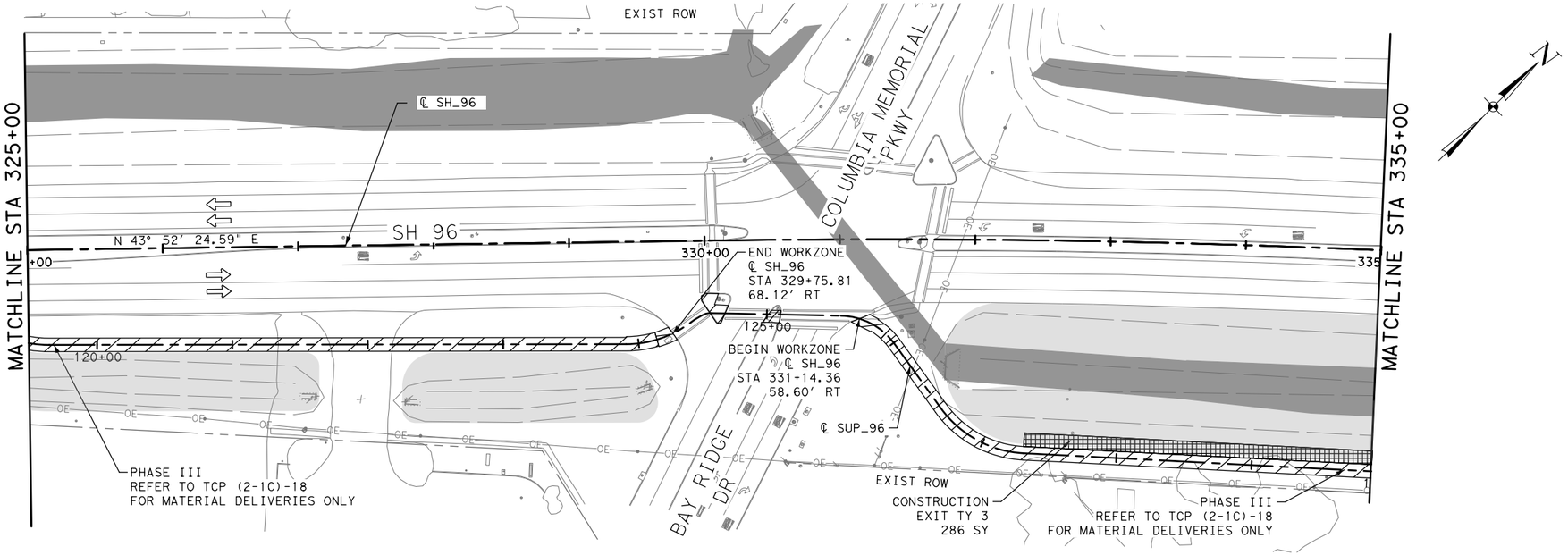

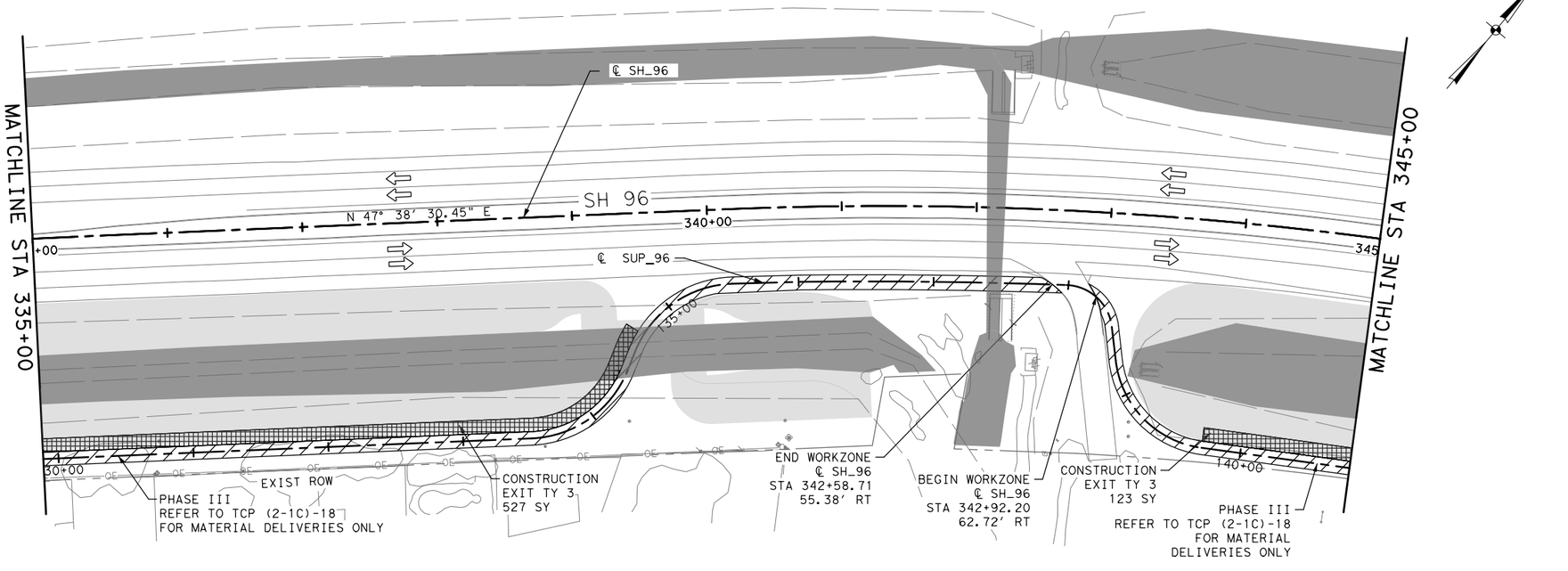

0' 25' 50' 100'

LEGEND:

- PROPOSED CONSTRUCTION THIS PHASE
- TY 3 CONSTRUCTION EXIT
- PREVIOUSLY CONSTRUCTED
- WETLANDS
- EXIST TRAFFIC FLOW
- (A) SIDEWALK CLOSED — R9-9, 24x12

NO.	DATE	REVISION	APPROVED

STATE OF TEXAS
JOHANNA TORRES
130063
LICENSED PROFESSIONAL ENGINEER
johannatorres
8/1/2023

Texas Department of Transportation
©2023

JONES|CARTER
Texas Board of Professional Engineers Registration No. F-23290
4350 Lockhill Selma Rd, Suite 100• San Antonio, Texas 78249 •210.494.5511

SH 96, FM 270
TRAFFIC CONTROL PLAN
PHASE 3

STA 325+00 TO STA 345+00

SHEET 6 OF 10

DRAWN	FED.RD. DIV.NO.	FEDERAL AID PROJECT NO.		HIGHWAY NO.
AA	06			FM 270, ETC
DESIGNED	STATE	DIST.	COUNTY	SHEET NO.
JT	TEXAS	HOUSTON	GALVESTON	46
CHECKED	CONT.	SECT.	JOB	
NG	0912	73	215	
APPROVED				
DD				

PLOTDRIVER: LCBF.pltcfg
PENTABLE: LCBF.tbl
DATE: 8/1/2023 11:31:28 PM USER: sss
FILE: c:\dms\pwe101-01\stela.staver-scull\dms22653\LCBF_TCP_PH3_05.dgn

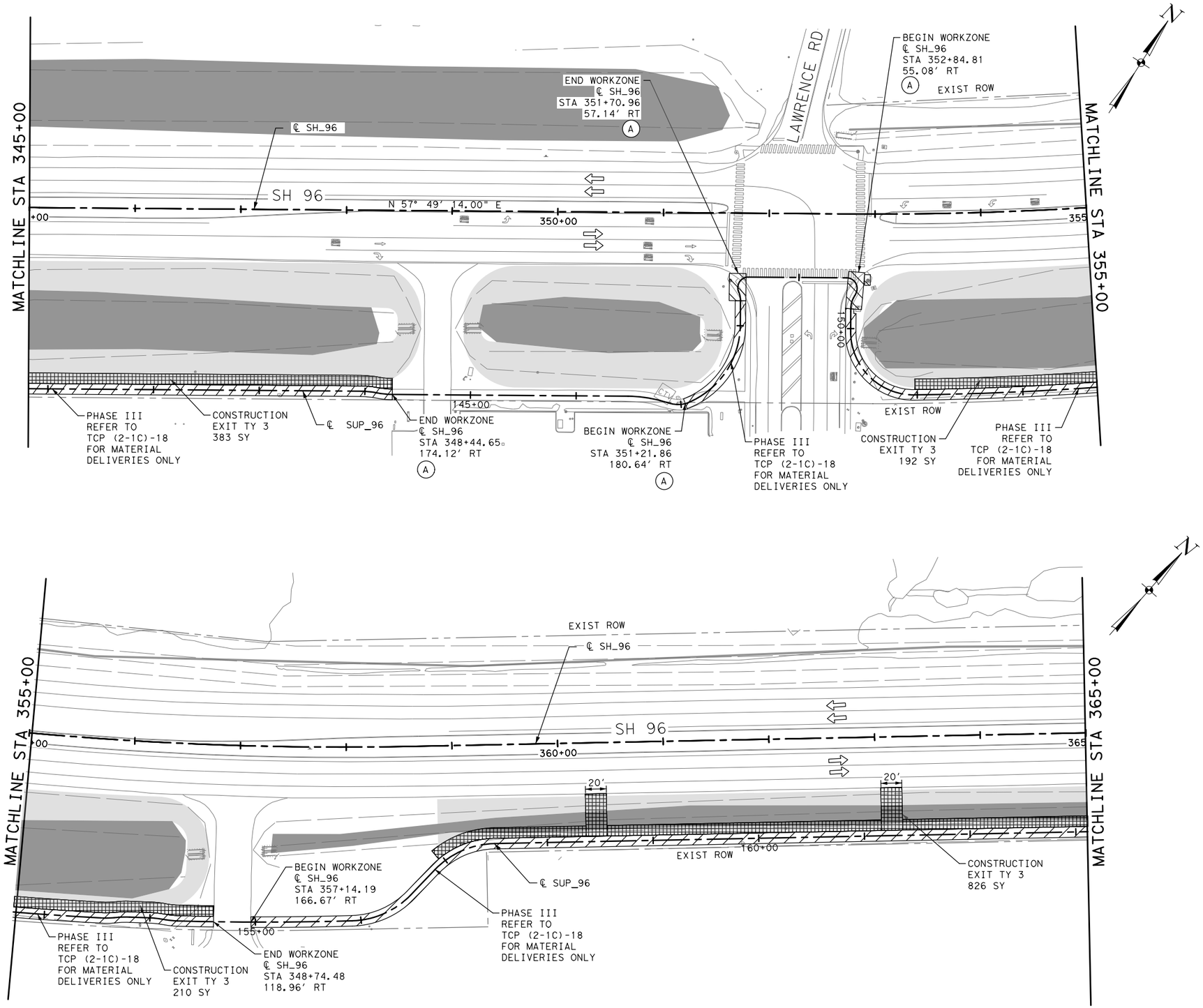

NO.	DATE	REVISION	APPROVED

JOHANNA TORRES
130063
LICENSED PROFESSIONAL ENGINEER
STATE OF TEXAS
johannatorres
8/1/2023

Texas Department of Transportation
©2023

JONES|CARTER
Texas Board of Professional Engineers Registration No. F-23290
4350 Lockhill Selma Rd, Suite 100• San Antonio, Texas 78249•210.494.5511

SH 96, FM 270
TRAFFIC CONTROL PLAN
PHASE 3

STA 345+00 TO STA 365+00

SHEET 7 OF 10

DRAWN	FED.RD. DIV.NO.	FEDERAL AID PROJECT NO.		HIGHWAY NO.
AA	06			FM 270,ETC
DESIGNED	STATE	DIST.	COUNTY	SHEET NO.
JT	TEXAS	HOUSTON	GALVESTON	47
CHECKED	CONT.	SECT.	JOB	
NG	0912	73	215	
APPROVED				
DD				

PENTABLE:LCBF.tbl
PLOTDRIVER:LCBF.pltcfg
DATE:8/1/2023 11:31:32 PM USER:sss
FILE:c:\bms\pwe101-01\stela.staver-scull\dms22653\LCBF_TCP_PH3_06.dgn

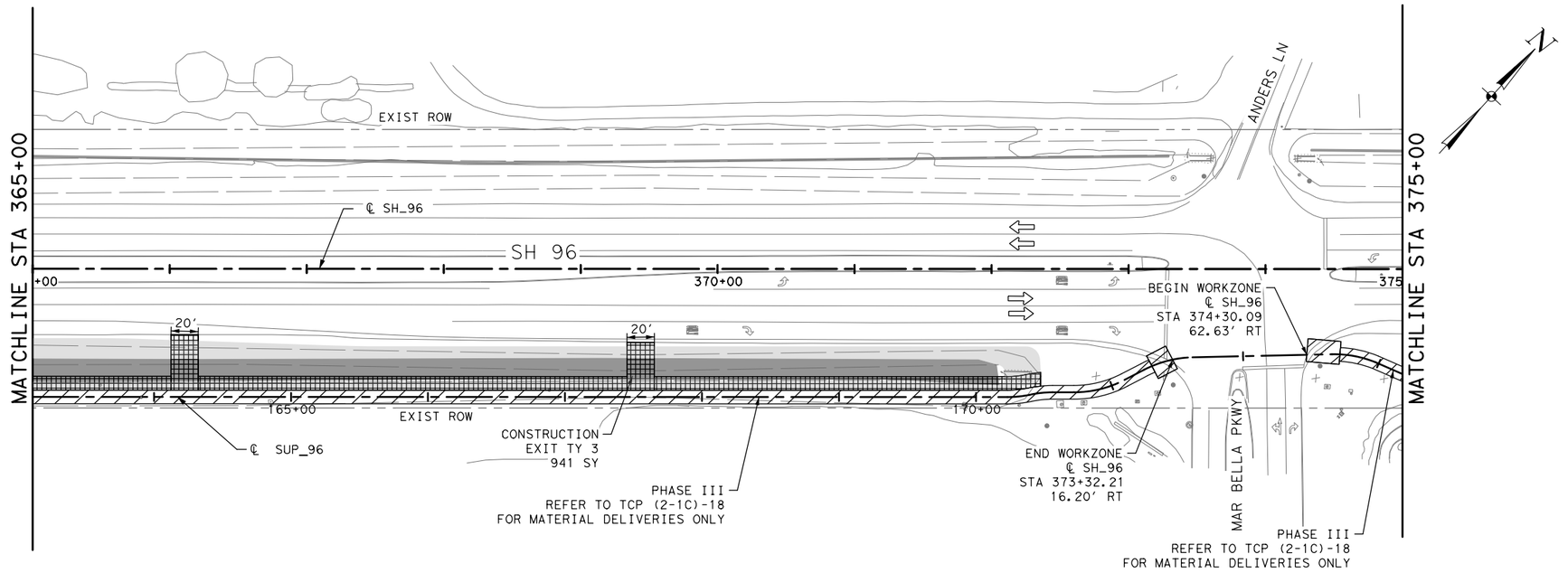

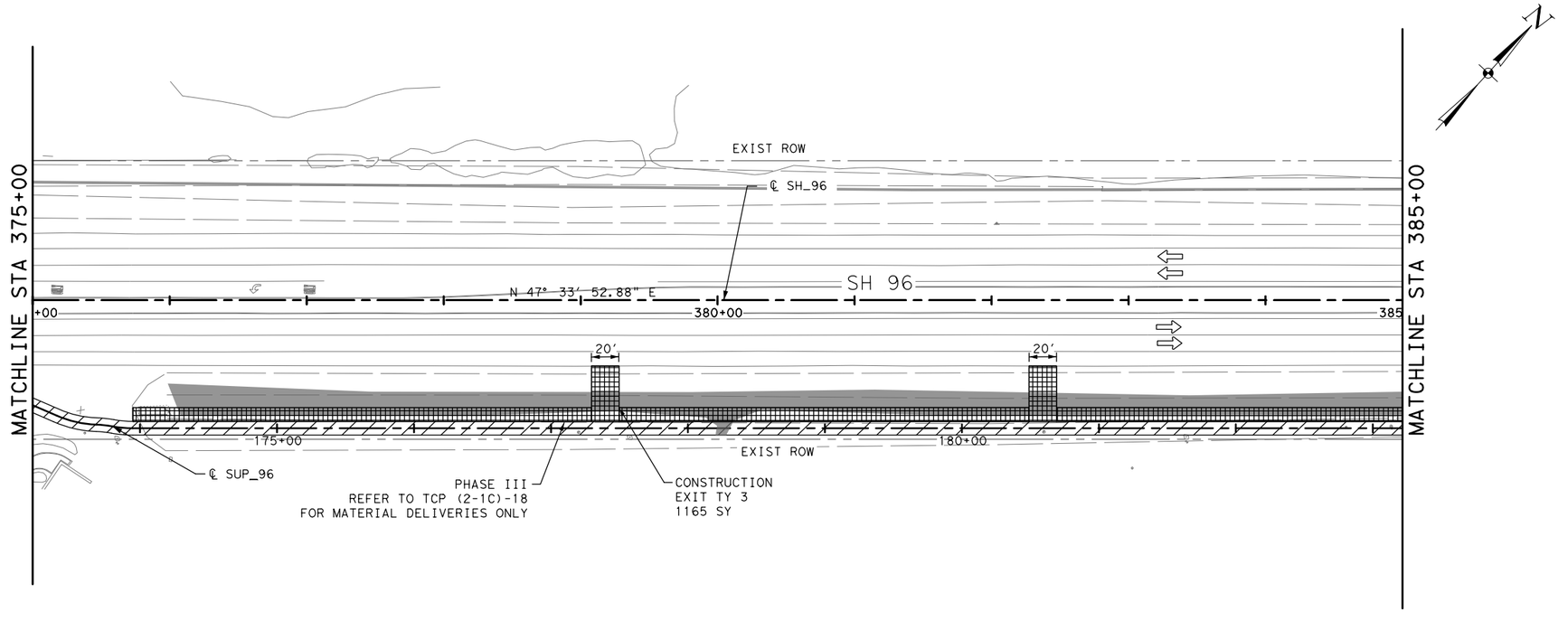

0' 25' 50' 100'

LEGEND:

- PROPOSED CONSTRUCTION THIS PHASE
- TY 3 CONSTRUCTION EXIT
- PREVIOUSLY CONSTRUCTED
- WETLANDS
- EXIST TRAFFIC FLOW
- (A) SIDEWALK CLOSED — R9-9, 24x12

NO.	DATE	REVISION	APPROVED

STATE OF TEXAS
JOHANNA TORRES
130063
LICENSED
PROFESSIONAL ENGINEER
johannatorres
8/1/2023

Texas Department of Transportation
©2023

JONES|CARTER
Texas Board of Professional Engineers Registration No. F-23290
4350 Lockhill Selma Rd, Suite 100• San Antonio, Texas 78249 •210.494.5511

SH 96, FM 270
TRAFFIC CONTROL PLAN
PHASE 3

STA 365+00 TO STA 385+00

SHEET 8 OF 10

DRAWN	FED.RD. DIV.NO.	FEDERAL AID PROJECT NO.		HIGHWAY NO.
AA	06			FM 270, ETC
DESIGNED	STATE	DIST.	COUNTY	SHEET NO.
JT	TEXAS	HOUSTON	GALVESTON	48
CHECKED	CONT.	SECT.	JOB	
NG	0912	73	215	
APPROVED				
DD				

PENTABLE: LCBF.tbl
PLOTDRIVER: LCBF.pltcfg
DATE: 8/1/2023 11:31:37 PM USER: sss
FILE: c:\bms\pwe101-01\stela.staver-scull\dms22653\LCBF_TCP_PH3_07.dgn

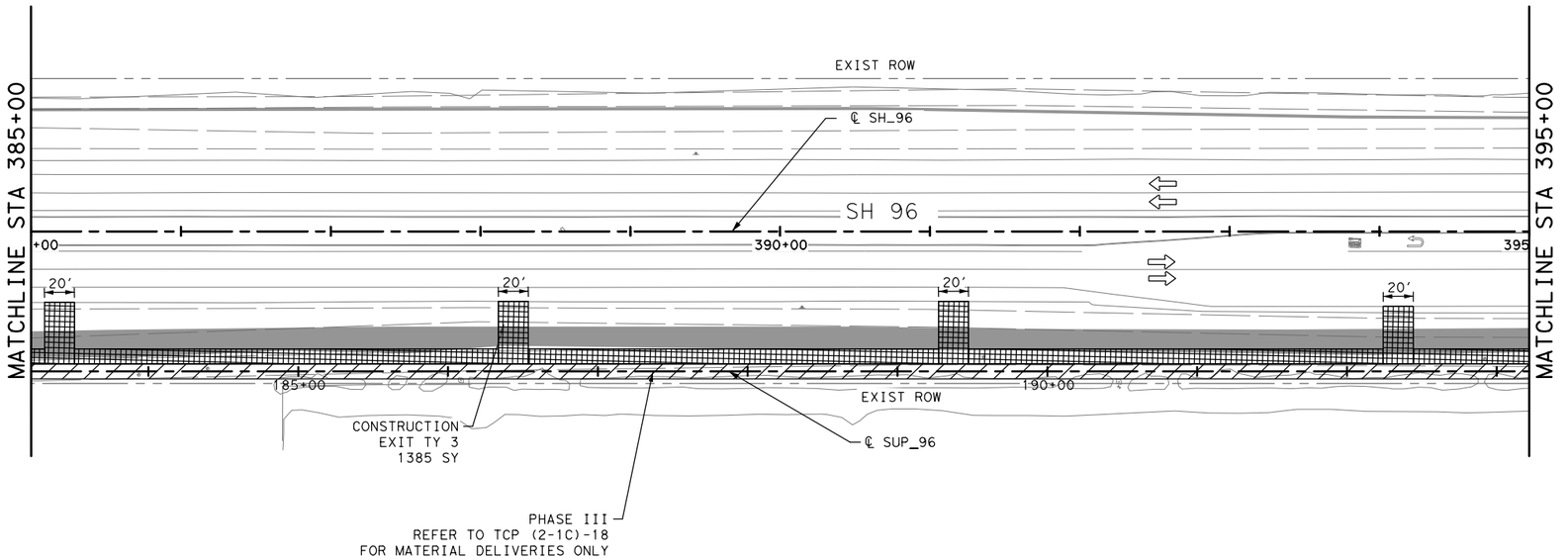

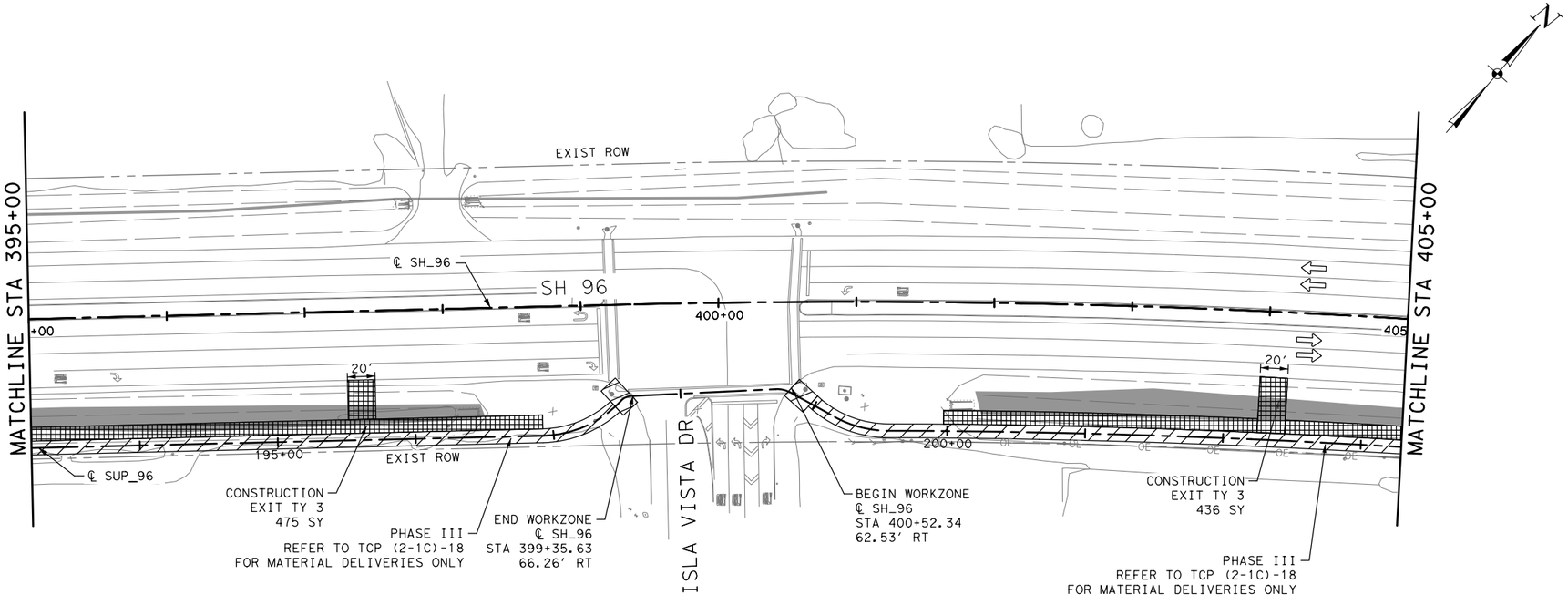

0′ 25′ 50′ 100′

LEGEND:

- PROPOSED CONSTRUCTION THIS PHASE
- TY 3 CONSTRUCTION EXIT
- PREVIOUSLY CONSTRUCTED
- WETLANDS
- EXIST TRAFFIC FLOW
- (A) SIDEWALK CLOSED
  R9-9
  24x12

NO.	DATE	REVISION	APPROVED

STATE OF TEXAS
JOHANNA TORRES
130063
LICENSED
PROFESSIONAL ENGINEER
johannatorres
8/1/2023

Texas Department of Transportation
©2023

JONES|CARTER
Texas Board of Professional Engineers Registration No. F-23290
4350 Lockhill Selma Rd, Suite 100 • San Antonio, Texas 78249 • 210.494.5511

SH 96, FM 270
TRAFFIC CONTROL PLAN
PHASE 3

STA 385+00 TO STA 405+00

SHEET 9 OF 10

DRAWN	FED. RD. DIV. NO.	FEDERAL AID PROJECT NO.		HIGHWAY NO.
AA	06			FM 270, ETC
DESIGNED	STATE	DIST.	COUNTY	SHEET NO.
JT	TEXAS	HOUSTON	GALVESTON	49
CHECKED	CONT.	SECT.	JOB	
NG	0912	73	215	
APPROVED				
DD				

PENTABLE:LCBF.tbl
PLOTDRIVER:LCBF.pltcfg
DATE:8/1/2023 11:31:41 PM USER:sss
FILE:c:\bms\pwe101-01\stela.stover-scull\dms22653\LCBF_TCP_PH3_08.dgn

PLOTDRIVER: LCBF.pltcfg PENTABLE: LCBF.tbl
DATE: 8/1/2023 11:31:45 PM USER: sss
FILE: c:\bms\pwe101-01\stela.staver-scull\dms22653\LCBF_TCP_PH3_09.dgn

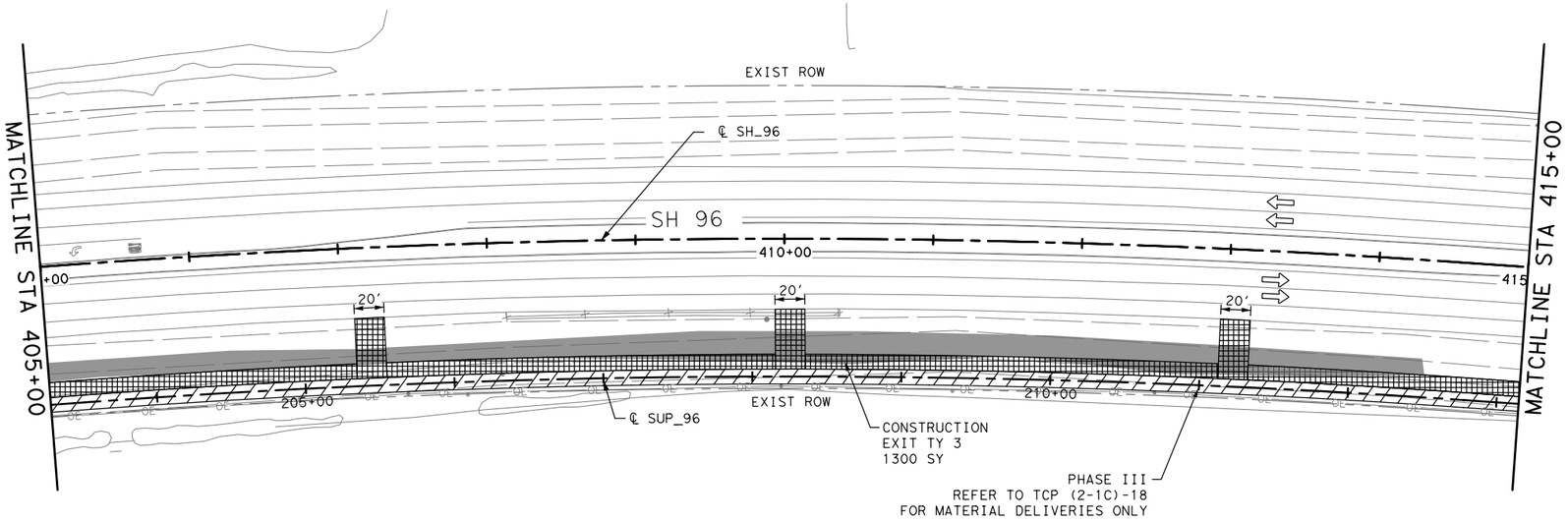

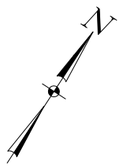

0' 25' 50' 100'

LEGEND:

- PROPOSED CONSTRUCTION THIS PHASE
- TY 3 CONSTRUCTION EXIT
- PREVIOUSLY CONSTRUCTED
- WETLANDS
- EXIST TRAFFIC FLOW
- (A) SIDEWALK CLOSED — R9-9 24x12

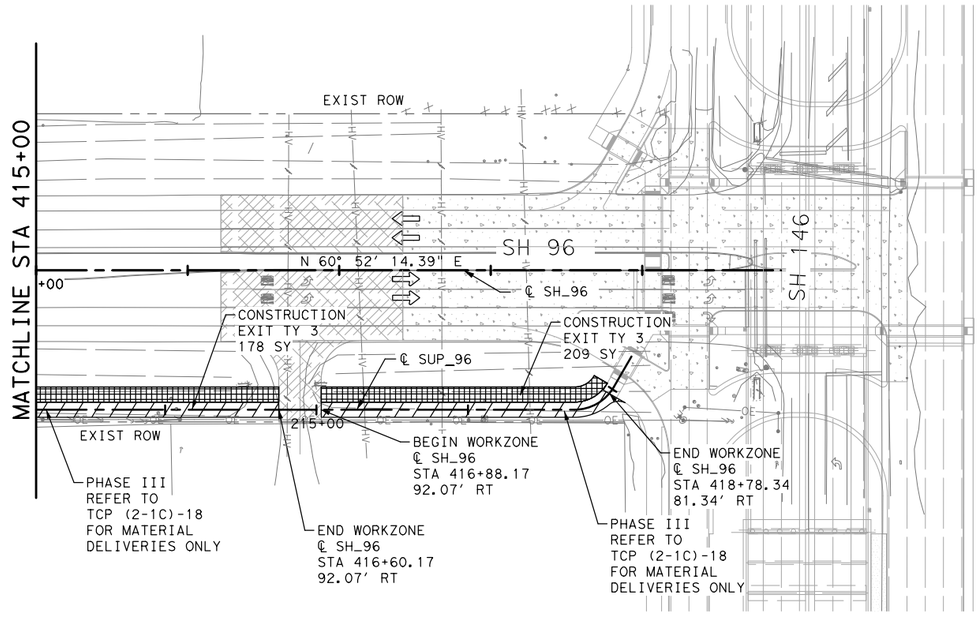

NO.	DATE	REVISION	APPROVED

STATE OF TEXAS
JOHANNA TORRES
130063
LICENSED
PROFESSIONAL ENGINEER
johannatorres
8/1/2023

Texas Department of Transportation
©2023

JONES|CARTER
Texas Board of Professional Engineers Registration No. F-23290
4350 Lockhill Selma Rd, Suite 100 • San Antonio, Texas 78249 • 210.494.5511

SH 96, FM 207
TRAFFIC CONTROL PLAN
PHASE 3

STA 405+00 TO END PROJECT

SHEET 10 OF 10

DRAWN	FED.RD. DIV.NO.	FEDERAL AID PROJECT NO.		HIGHWAY NO.
AA	06			FM 270, ETC
DESIGNED	STATE	DIST.	COUNTY	SHEET NO.
JT	TEXAS	HOUSTON	GALVESTON	
CHECKED	CONT.	SECT.	JOB	
NG	0912	73	215	50
APPROVED				
DD				

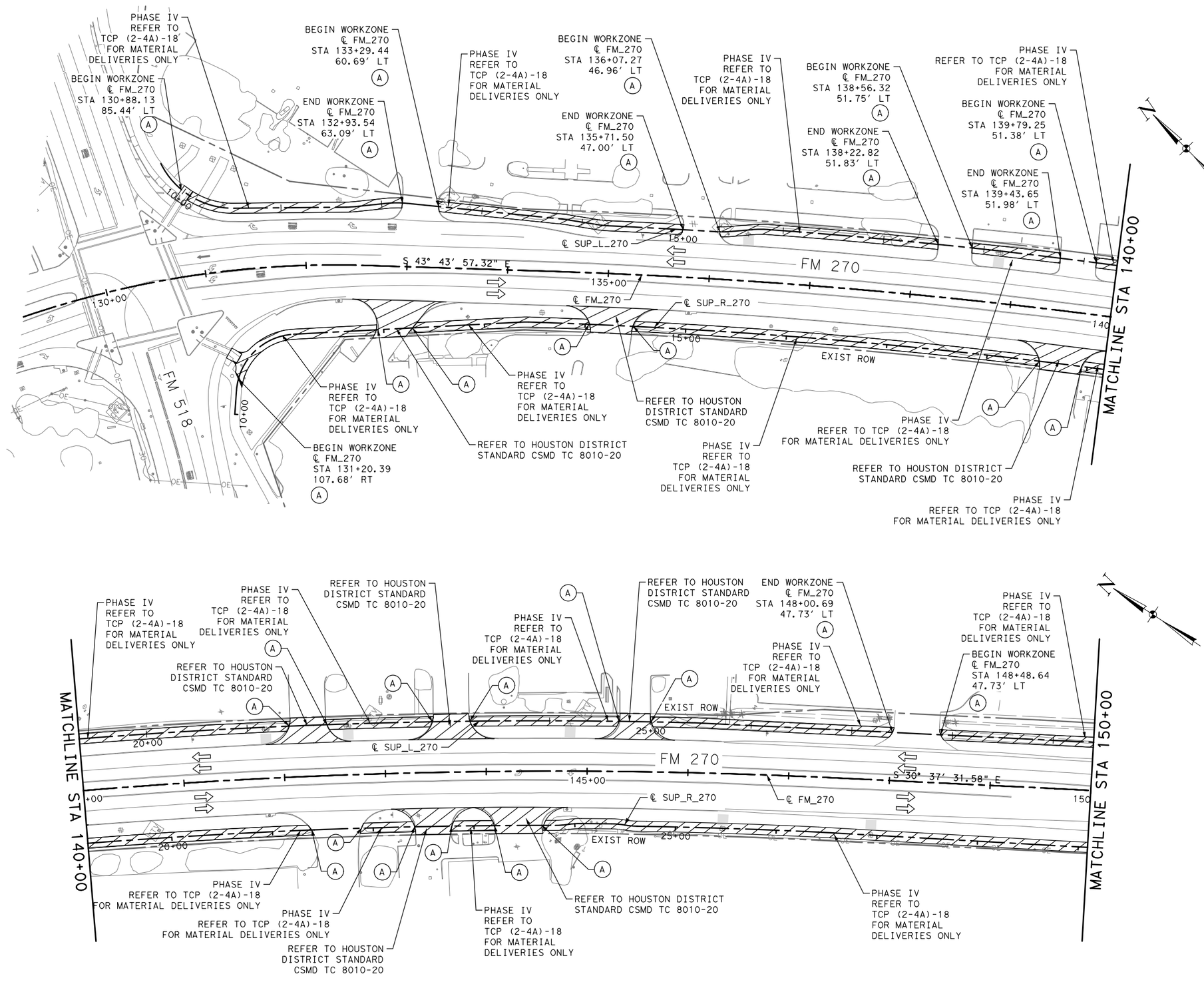

NO.	DATE	REVISION	APPROVED

STATE OF TEXAS
JOHANNA TORRES
130063
LICENSED PROFESSIONAL ENGINEER
johannatorres
8/1/2023

Texas Department of Transportation
©2023

JONES|CARTER
Texas Board of Professional Engineers Registration No. F-23290
4350 Lockhill Selma Rd, Suite 100• San Antonio, Texas 78249 •210.494.5511

SH 96, FM 270
TRAFFIC CONTROL PLAN
PHASE 4

BEGIN PROJECT TO STA 150+00

SHEET 1 OF 2

DRAWN	FED.RD. DIV.NO.	FEDERAL AID PROJECT NO.		HIGHWAY NO.
AA	06			FM 270, ETC
DESIGNED	STATE	DIST.	COUNTY	SHEET NO.
JT	TEXAS	HOUSTON	GALVESTON	51
CHECKED	CONT.	SECT.	JOB	
NG	0912	73	215	
APPROVED				
DD				

PENTABLE: LCBF.tbl
PLOTDRIVER: LCBF.pltcfg
DATE:8/1/2023 11:31:48 PM USER:sss
FILE:c:\bms\pwe101-01\stela.staver-scull\dms22653\LCBF_TCP_PH4_01.dgn

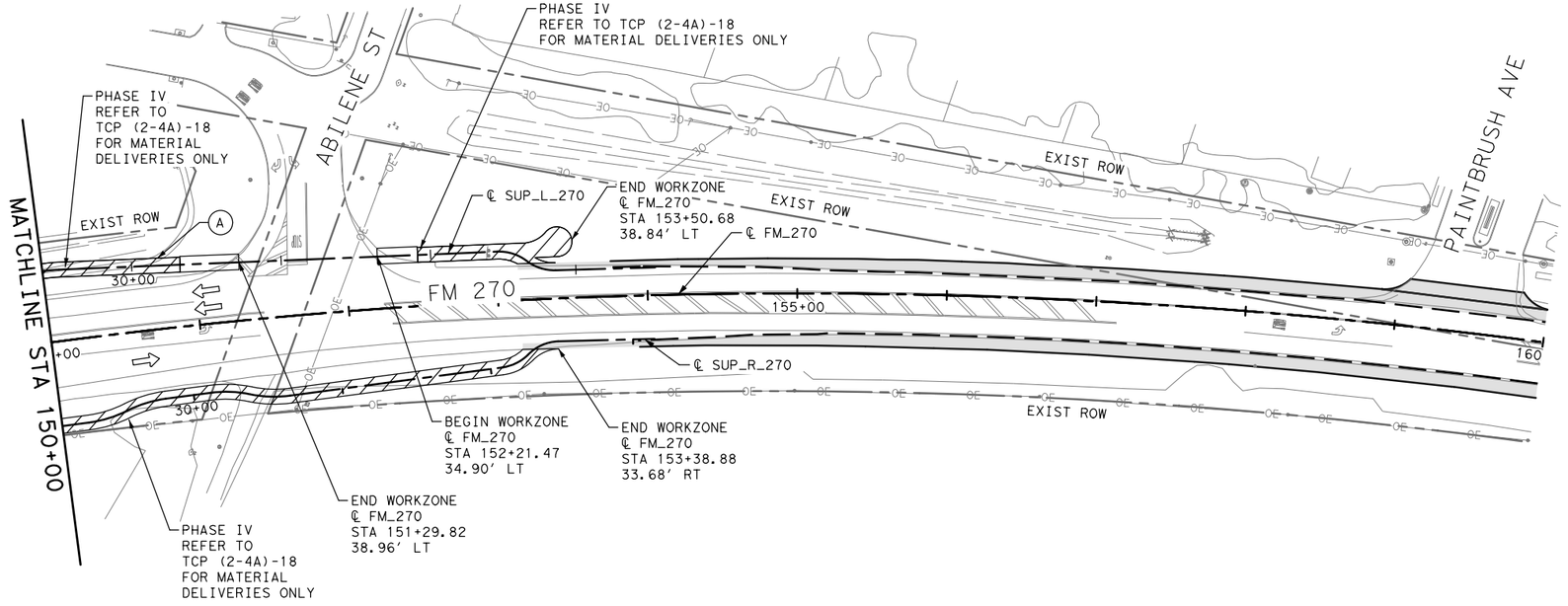

0' 25' 50' 100'

N

LEGEND:

- PROPOSED CONSTRUCTION THIS PHASE
- PREVIOUSLY CONSTRUCTED
- WETLANDS
- EXIST TRAFFIC FLOW
- (A) SIDEWALK CLOSED
  R9-9
  24x12

NO.	DATE	REVISION	APPROVED

STATE OF TEXAS
JOHANNA TORRES
130063
LICENSED PROFESSIONAL ENGINEER
johannatorres
8/1/2023

Texas Department of Transportation
©2023

JONES|CARTER
Texas Board of Professional Engineers Registration No. F-23290
4350 Lockhill Selma Rd, Suite 100•San Antonio, Texas 78249•210.494.5511

SH 96, FM 270
TRAFFIC CONTROL PLAN
PHASE 4
STA 150+00 TO STA 150+00

SHEET 2 OF 2

DRAWN	FED.RD. DIV.NO.	FEDERAL AID PROJECT NO.		HIGHWAY NO.
AA	06			FM 270,ETC
DESIGNED	STATE	DIST.	COUNTY	SHEET NO.
JT	TEXAS	HOUSTON	GALVESTON	52
CHECKED	CONT.	SECT.	JOB	
NG	0912	73	215	
APPROVED				
DD				

PLOTDRIVER:LCBF.pltcfg PENTABLE:LCBF.tbl
DATE:8/1/2023 11:31:51 PM USER:sss
FILE:c:\bms\pwe101-01\stela.staver-scull\dms22653\LCBF_TCP_PH4_02.dgn

DISCLAIMER:
The use of this standard is governed by the "Texas Engineering Practice Act". No warranty of any kind is made by TxDOT for any purpose whatsoever. TxDOT assumes no responsibility for the conversion of this standard to other formats or for incorrect results or damages resulting from its use.

BARRICADE AND CONSTRUCTION (BC) STANDARD SHEETS GENERAL NOTES:

1. The Barricade and Construction Standard Sheets (BC sheets) are intended to show typical examples for placement of temporary traffic control devices, construction pavement markings, and typical work zone signs. The information contained in these sheets meet or exceed the requirements shown in the "Texas Manual on Uniform Traffic Control Devices" (TMUTCD).

2. The development and design of the Traffic Control Plan (TCP)is the responsibility of the Engineer.

3. The Contractor may propose changes to the TCP that are signed and sealed by a licensed professional engineer for approval. The Engineer may develop, sign and seal Contractor proposed changes.

4. The Contractor is responsible for installing and maintaining the traffic control devices as shown in the plans. The Contractor may not move or change the approximate location of any device without the approval of the Engineer.

5. Geometric design of lane shifts and detours should, when possible, meet the applicable design criteria contained in manuals such as the American Association of State Highway and Transportation Officials (AASHTO), "A Policy on Geometric Design of Highways and Streets," the TxDOT "Roadway Design Manual" or engineering judgment.

6. When projects abut, the Engineer(s) may omit the END ROAD WORK, TRAFFIC FINES DOUBLE, and other advance warning signs if the signing would be redundant and the work areas appear continuous to the motorists. If the adjacent project is completed first, the Contractor shall erect the necessary warning signs as shown on these sheets, the TCP sheets or as directed by the Engineer. The BEGIN ROAD WORK NEXT X MILES sign shall be revised to show appropriate work zone distance.

7. The Engineer may require duplicate warning signs on the median side of divided highways where median width will permit and traffic volumes justify the signing.

8. All signs shall be constructed in accordance with the details found in the "Standard Highway Sign Designs for Texas," latest edition. Sign details not shown in this manual shall be shown in the plans or the Engineer shall provide a detail to the Contractor before the sign is manufactured.

9. The temporary traffic control devices shown in the illustrations of the BC sheets are examples. As necessary, the Engineer will determine the most appropriate traffic control devices to be used.

10. Where highway construction or maintenance work is being undertaken, other than mobile operations as defined by the Texas Manual on Uniform Traffic Control Devices, CSJ limit signs are required. CSJ limit signs are shown on BC(2). The OBEY WARNING SIGNS STATE LAW sign, STAY ALERT TALK OR TEXT LATER and the WORK ZONE TRAFFIC FINES DOUBLE sign with plaque shall be erected in advance of the CSJ limits. The BEGIN ROAD WORK NEXT X MILES, CONTRACTOR and END ROAD WORK signs shall be erected at or near the CSJ limits. For mobile operations, CSJ limit signs are not required.

11. Traffic control devices should be in place only while work is actually in progress or a definite need exists.

12. The Engineer has the final decision on the location of all traffic control devices.

13. Inactive equipment and work vehicles, including workers' private vehicles must be parked away from travel lanes. They should be as close to the right-of-way line as possible, or located behind a barrier or guardrail, or as approved by the Engineer.

WORKER SAFETY NOTES:

1. Workers on foot who are exposed to traffic or to construction equipment within the right-of-way shall wear high-visibility safety apparel meeting the requirements of ISEA "American National Standard for High-Visibility Apparel," or equivalent revisions, and labeled as ANSI 107-2004 standard performance for Class 2 or 3 risk exposure. Class 3 garments should be considered for high traffic volume work areas or night time work.

2. Except in emergency situations, flagger stations shall be illuminated when flagging is used at night.

COMPLIANT WORKZONE TRAFFIC CONTROL DEVICES

1. Only pre-qualified products shall be used. The "Compliant Work Zone Traffic Control Devices List" (CWZTCD) describes pre-qualified products and their sources.

2. Work zone traffic control devices shall be compliant with the Manual for Assessing safety Hardware (MASH).

THE DOCUMENTS BELOW CAN BE FOUND ON-LINE AT http://www.txdot.gov
COMPLIANT WORK ZONE TRAFFIC CONTROL DEVICES LIST (CWZTCD)
DEPARTMENTAL MATERIAL SPECIFICATIONS (DMS)
MATERIAL PRODUCER LIST (MPL)
ROADWAY DESIGN MANUAL - SEE "MANUALS (ONLINE MANUALS)"
STANDARD HIGHWAY SIGN DESIGNS FOR TEXAS (SHSD)
TEXAS MANUAL ON UNIFORM TRAFFIC CONTROL DEVICES (TMUTCD)
TRAFFIC ENGINEERING STANDARD SHEETS

DATE: 8/1/2023 11:31:52 PM
FILE: $FILE$

SHEET 1 OF 12

Texas Department of Transportation

Traffic Safety Division Standard

BARRICADE AND CONSTRUCTION GENERAL NOTES AND REQUIREMENTS

BC(1)-21

FILE: bc-21.dgn	DN: TxDOT	CK: TxDOT	DW: TxDOT	CK: TxDOT
©TxDOT November 2002	CONT	SECT	JOB	HIGHWAY
REVISIONS 4-03 7-13	0912	73	215	FM 270, ETC
9-07 8-14	DIST	COUNTY		SHEET NO.
5-10 5-21	HOU	GALVESTON		53

DISCLAIMER:
The use of this standard is governed by the "Texas Engineering Practice Act". No warranty of any kind is made by TxDOT for any purpose whatsoever. TxDOT assumes no responsibility for the conversion of this standard to other formats or for incorrect results or damages resulting from its use.

TYPICAL LOCATION OF CROSSROAD SIGNS

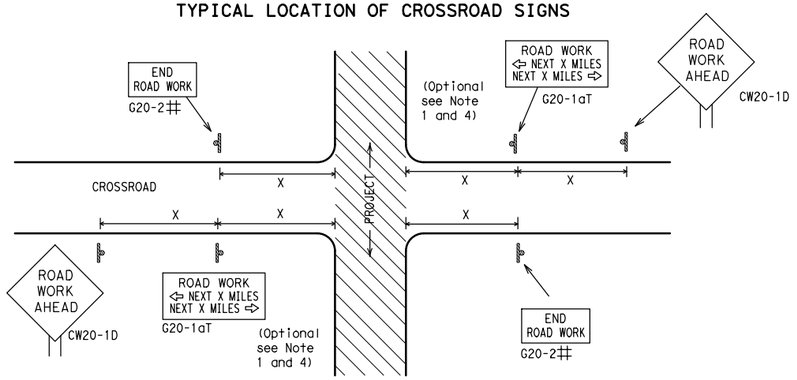

May be mounted on back of "ROAD WORK AHEAD"(CW20-1D) sign with approval of Engineer. (See note 2 below)

1. The typical minimum signing on a crossroad approach should be a "ROAD WORK AHEAD" (CW20-1D)sign and a (G20-2) "END ROAD WORK" sign, unless noted otherwise in plans.
2. The Engineer may use the reduced size 36" x 36" ROAD WORK AHEAD (CW20-1D) sign mounted back to back with the reduced size 36" x 18" "END ROAD WORK"(G20-2) sign on low volume crossroads (see Note 4 under "Typical Construction Warning Sign Size and Spacing"). See the "Standard Highway Sign Designs for Texas" manual for sign details. The Engineer may omit the advance warning signs on low volume crossroads. The Engineer will determine whether a road is low volume as per TMUTCD Part 5. This information shall be shown in the plans.
3. Based on existing field conditions, the Engineer/Inspector may require additional signs such as FLAGGER AHEAD, LOOSE GRAVEL, or other appropriate signs. When additional signs are required, these signs will be considered part of the minimum requirements. The Engineer/Inspector will determine the proper location and spacing of any sign not shown on the BC sheets, Traffic Control Plan sheets or the Work Zone Standard Sheets.
4. The "ROAD WORK NEXT X MILES"(G20-1aT)sign shall be required at high volume crossroads to advise motorists of the length of construction in either direction from the intersection. The Engineer will determine whether a roadway is considered high volume.
5. Additional traffic control devices may be shown elsewhere in the plans for higher volume crossroads.
6. When work occurs in the intersection area, appropriate traffic control devices, as shown elsewhere in the plans or as determined by the Engineer/Inspector, shall be in place.

T-INTERSECTION

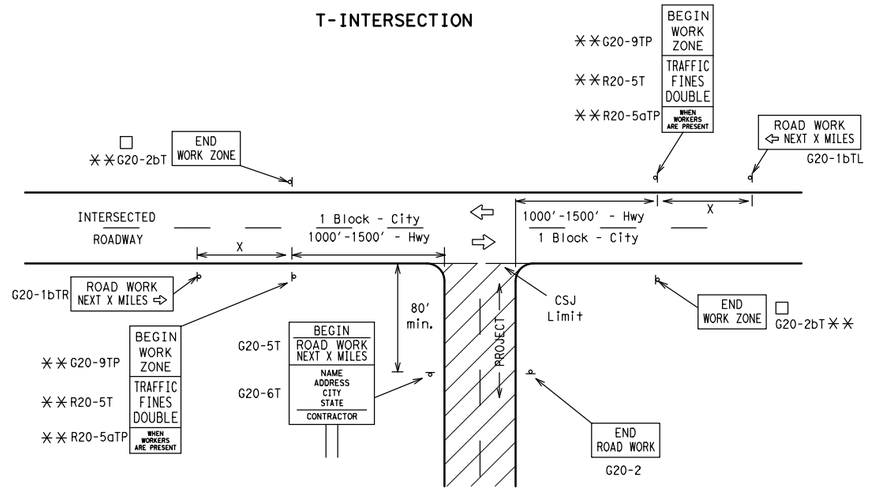

CSJ LIMITS AT T-INTERSECTION

1. The Engineer will determine the types and location of any additional traffic control devices, such as a flagger and accompanying signs, or other signs, that should be used when work is being performed at or near an intersection.
2. If construction closes the road at a T-intersection, the Contractor shall place the "CONTRACTOR NAME"(G20-6T) sign behind the Type 3 Barricades for the road closure (see BC(10) also). The "ROAD WORK NEXT X MILES" left arrow(G20-1bTL) and "ROAD WORK NEXT X MILES" right arrow (G20-1bTR)" signs shall be replaced by the detour signing called for in the plans.

TYPICAL CONSTRUCTION WARNING SIGN SIZE AND SPACING[1,5,6]

SIZE

Sign Number or Series	Conventional Road	Expressway/ Freeway
CW20[4] CW21 CW22 CW23 CW25	48" x 48"	48" x 48"
CW1, CW2, CW7, CW8, CW9, CW11, CW14	36" x 36"	48" x 48"
CW3, CW4, CW5, CW6, CW8-3, CW10, CW12	48" x 48"	48" x 48"

SPACING

Posted Speed	Sign △ Spacing "X"
MPH	Feet (Apprx.)
30	120
35	160
40	240
45	320
50	400
55	500[2]
60	600[2]
65	700[2]
70	800[2]
75	900[2]
80	1000[2]
*	*[3]

* For typical sign spacings on divided highways, expressways and freeways, see Part 6 of the "Texas Manual on Uniform Traffic Control Devices" (TMUTCD) typical application diagrams or TCP Standard Sheets.

△ Minimum distance from work area to first Advance Warning sign nearest the work area and/or distance between each additional sign.

GENERAL NOTES

1. Special or larger size signs may be used as necessary.
2. Distance between signs should be increased as required to have 1500 feet advance warning.
3. Distance between signs should be increased as required to have 1/2 mile or more advance warning.
4. 36" x 36" "ROAD WORK AHEAD" (CW20-1D)signs may be used on low volume crossroads at the discretion of the Engineer as per TMUTCD Part 5. See Note 2 under "Typical Location of Crossroad Signs".
5. Only diamond shaped warning sign sizes are indicated.
6. See sign size listing in "TMUTCD", Sign Appendix or the "Standard Highway Sign Designs for Texas" manual for complete list of available sign design sizes.

WORK AREAS IN MULTIPLE LOCATIONS WITHIN CSJ LIMITS

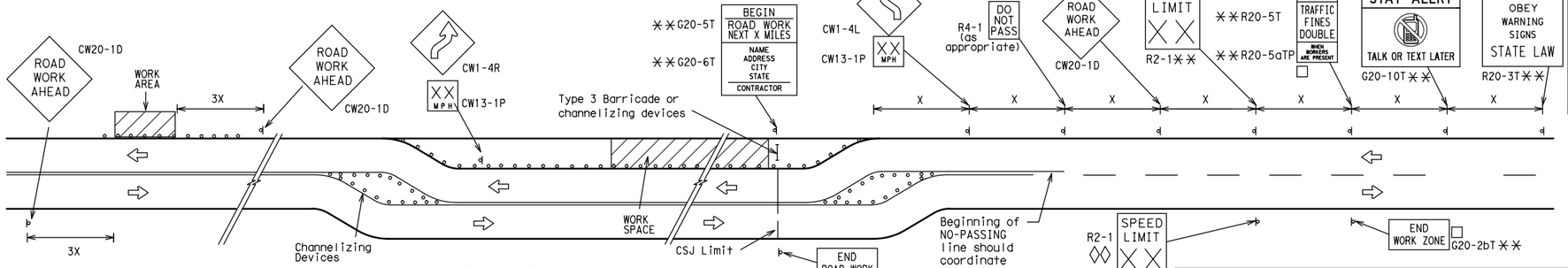

When extended distances occur between minimal work spaces, the Engineer/Inspector should ensure additional "ROAD WORK AHEAD"(CW20-1D)signs are placed in advance of these work areas to remind drivers they are still within the project limits. See the applicable TCP sheets for exact location and spacing of signs and channelizing devices.

SAMPLE LAYOUT OF SIGNING FOR WORK BEGINNING AT THE CSJ LIMITS

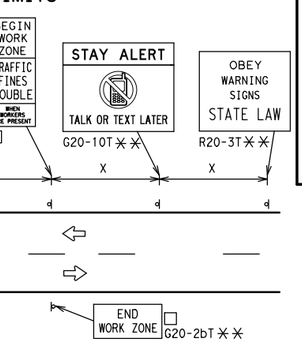

SAMPLE LAYOUT OF SIGNING FOR WORK BEGINNING DOWNSTREAM OF THE CSJ LIMITS

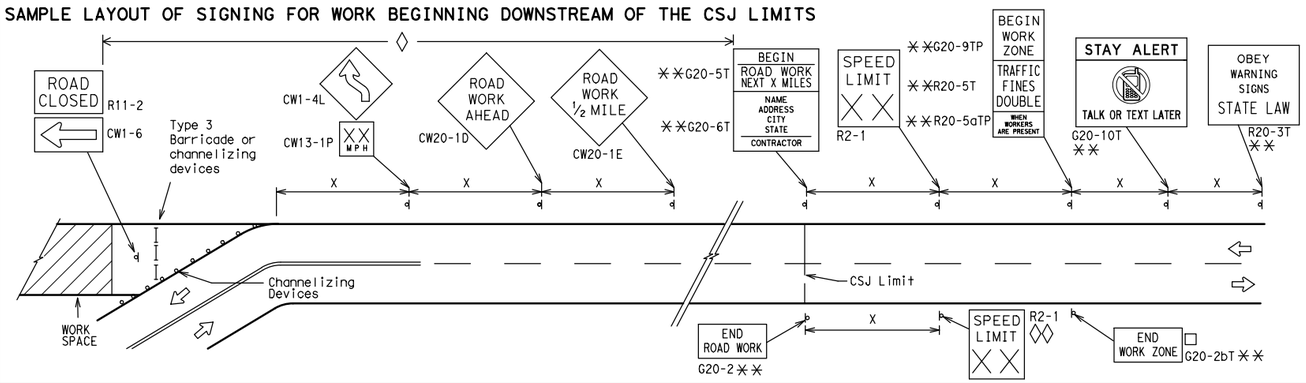

NOTES

The Contractor shall determine the appropriate distance to be placed on the G20-1 series signs and "BEGIN ROAD WORK NEXT X MILES"(G20-5T)sign for each specific project. This distance shall replace the "X" and shall be rounded to the nearest whole mile with the approval of the Engineer. No decimals shall be used.

□ The "BEGIN WORK ZONE"(G20-9TP) and "END WORK ZONE" (G20-2bT) shall be used as shown on the sample layout when advance signs are required outside the CSJ Limits. They inform the motorist of entering or leaving a part of the work zone lying outside the CSJ Limits where traffic fines may double if workers are present.

** CSJ limit signing is required for highway construction and maintenance work, with the exception of mobile operations.

◊ Area for placement of "ROAD WORK AHEAD" (CW20-1D)sign and other signs or devices as called for on the Traffic Control Plan.

◊◊ Contractor will install a regulatory speed limit sign at the end of the work zone.

LEGEND

⊢⊣	Type 3 Barricade
○ ○ ○	Channelizing Devices
▬	Sign
X	See Typical Construction Warning Sign Size and Spacing chart or the TMUTCD for sign spacing requirements.

SHEET 2 OF 12

Texas Department of Transportation — Traffic Safety Division Standard

BARRICADE AND CONSTRUCTION PROJECT LIMIT

BC(2)-21

FILE: bc-21.dgn	DN: TxDOT	CK: TxDOT	DW: TxDOT	CK: TxDOT
©TxDOT November 2002	CONT	SECT	JOB	HIGHWAY
REVISIONS 9-07 8-14 7-13 5-21	0912	73	215	FM 270, ETC
	DIST	COUNTY		SHEET NO.
	HOU	GALVESTON		54

96

DATE: 8/1/2023 11:31:53 PM
FILE: $FILE$

DISCLAIMER:
The use of this standard is governed by the "Texas Engineering Practice Act". No warranty of any kind is made by TxDOT for any purpose whatsoever. TxDOT assumes no responsibility for the conversion of this standard to other formats or for incorrect results or damages resulting from its use.

TYPICAL APPLICATION OF WORK ZONE SPEED LIMIT SIGNS

Work zone speed limits shall be regulatory, established in accordance with the "Procedures for Establishing Speed Zones," and approved by the Texas Transportation Commission, or by City Ordinance when within Incorporated City Limits.

Reduced speeds should only be posted in the vicinity of work activity and not throughout the entire project.

Regulatory work zone speed signs (R2-1) shall be removed or covered during periods when they are not needed.

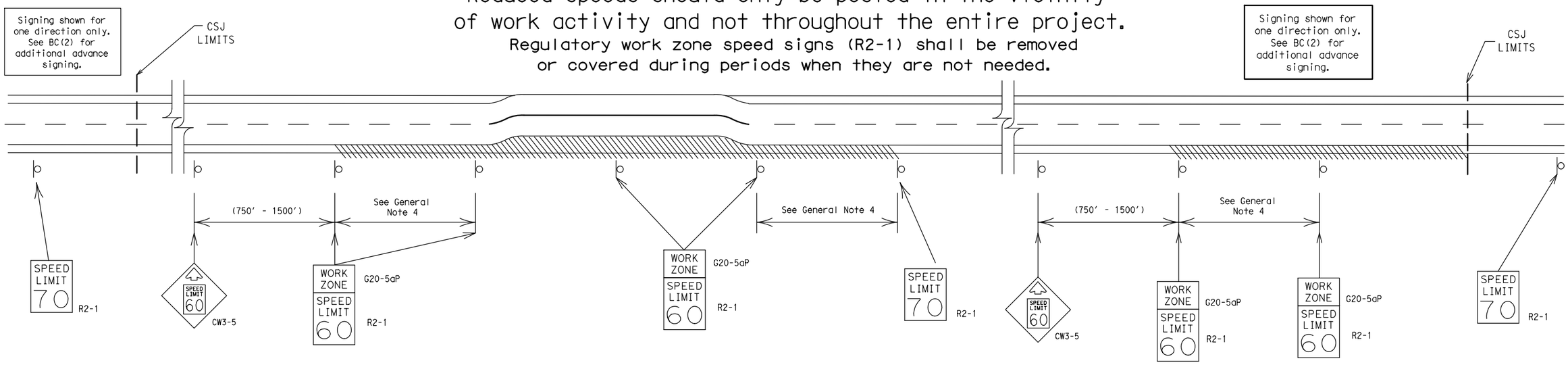

GUIDANCE FOR USE:

LONG/INTERMEDIATE TERM WORK ZONE SPEED LIMITS

This type of work zone speed limit should be included on the design of the traffic control plans when restricted geometrics with a lower design speed are present in the work zone and modification of the geometrics to a higher design speed is not feasible.

Long/Intermediate Term Work Zone Speed Limit signs, when approved as described above, should be posted and visible to the motorist when work activity is present. Work activity may also be defined as a change in the roadway that requires a reduced speed for motorists to safely negotiate the work area, including:

a) rough road or damaged pavement surface
b) substantial alteration of roadway geometrics (diversions)
c) construction detours
d) grade
e) width
f) other conditions readily apparent to the driver

As long as any of these conditions exist, the work zone speed limit signs should remain in place.

SHORT TERM WORK ZONE SPEED LIMITS

This type of work zone speed limit may be included on the design of the traffic control plans when workers or equipment are not behind concrete barrier, when work activity is within 10 feet of the traveled way or actually in the traveled way.

Short Term Work Zone Speed Limit signs should be posted and visible to the motorists only when work activity is present. When work activity is not present, signs shall be removed or covered.
(See Removing or Covering on BC(4)).

GENERAL NOTES

1. Regulatory work zone speed limits should be used only for sections of construction projects where speed control is of major importance.
2. Regulatory work zone speed limit signs shall be placed on supports at a 7 foot minimum mounting height.
3. Speed zone signs are illustrated for one direction of travel and are normally posted for each direction of travel.
4. Frequency of work zone speed limit signs should be:
   40 mph and greater 0.2 to 2 miles
   35 mph and less 0.2 to 1 mile
5. Regulatory speed limit signs shall have black legend and border on a white reflective background (See "Reflective Sheeting" on BC(4)).
6. Fabrication, erection and maintenance of the"ADVANCE SPEED LIMIT"(CW3-5)sign, "WORK ZONE"(G20-5aP) plaque and the "SPEED LIMIT"(R2-1)signs shall not be paid for directly, but shall be considered subsidiary to Item 502.
7. Turning signs from view, laying signs over or down will not be allowed, unless as otherwise noted under "REMOVING OR COVERING" on BC(4).
8. Techniques that may help reduce traffic speeds include but are not limited to:
   A. Law enforcement.
   B. Flagger stationed next to sign.
   C. Portable changeable message sign (PCMS).
   D. Low-power (drone) radar transmitter.
   E. Speed monitor trailers or signs.
9. Speeds shown on details above are for illustration only. Work Zone Speed Limits should only be posted as approved for each project.
10. For more specific guidance concerning the type of work, work zone conditions and factors impacting allowable regulatory construction speed zone reduction see TxDOT form #1204 in the TxDOT e-form system.

Texas Department of Transportation | Traffic Safety Division Standard

BARRICADE AND CONSTRUCTION WORK ZONE SPEED LIMIT

BC(3)-21

FILE: bc-21.dgn	DN: TxDOT	CK: TxDOT	DW: TxDOT	CK: TxDOT
©TxDOT November 2002	CONT	SECT	JOB	HIGHWAY
REVISIONS 9-07 8-14 7-13 5-21	0912	73	215	FM 270, ETC
	DIST	COUNTY		SHEET NO.
	HOU	GALVESTON		55

97

DATE: 8/1/2023 11:31:53 PM
FILE: $FILE$

DISCLAIMER:
The use of this standard is governed by the "Texas Engineering Practice Act". No warranty of any kind is made by TxDOT for any purpose whatsoever. TxDOT assumes no responsibility for the conversion of this standard to other formats or for incorrect results or damages resulting from its use.

TYPICAL MINIMUM CLEARANCES FOR LONG TERM AND INTERMEDIATE TERM SIGNS

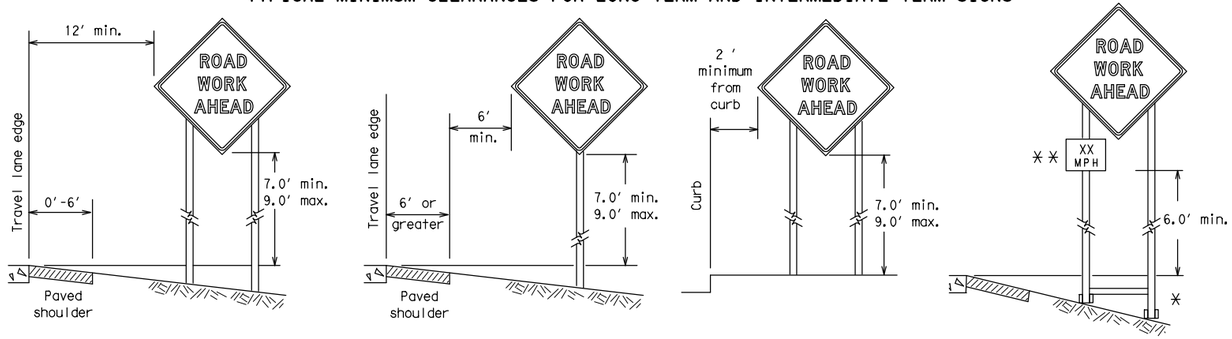

⚹ When placing skid supports on unlevel ground, the leg post lengths must be adjusted so the sign appears straight and plumb. Objects shall NOT be placed under skids as a means of leveling.

⚹⚹ When plaques are placed on dual-leg supports, they should be attached to the upright nearest the travel lane. Supplemental plaques (advisory or distance) should not cover the surface of the parent sign.

ATTACHMENT FOR SIGN SUPPORTS

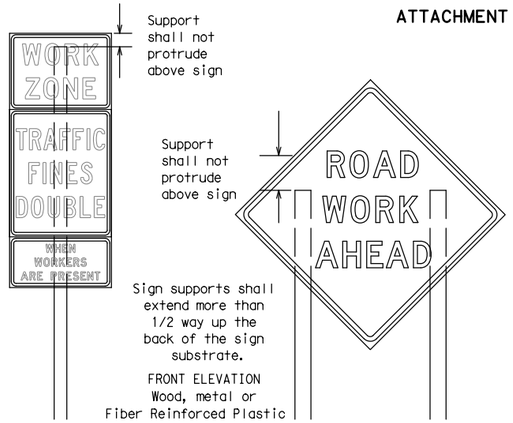

FRONT ELEVATION
Wood, metal or
Fiber Reinforced Plastic

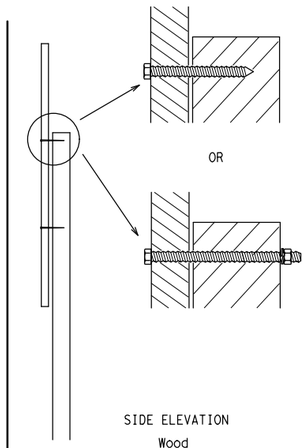

SIDE ELEVATION
Wood

Attachment to wooden supports will be by bolts and nuts or screws. Use TxDOT's or manufacturer's recommended procedures for attaching sign substrates to other types of sign supports

Nails shall NOT be allowed. Each sign shall be attached directly to the sign support. Multiple signs shall not be joined or spliced by any means. Wood supports shall not be extended or repaired by splicing or other means.

Splicing embedded perforated square metal tubing in order to extend post height will only be allowed when the splice is made using four bolts, two above and two below the spice point. Splice must be located entirely behind the sign substrate, not near the base of the support. Splice insert lengths should be at least 5 times nominal post size, centered on the splice and of at least the same gauge material.

STOP/SLOW PADDLES

1. STOP/SLOW paddles are the primary method to control traffic by flaggers. The STOP/SLOW paddle size should be 24" x 24".
2. STOP/SLOW paddles shall be retroreflectorized when used at night.
3. STOP/SLOW paddles may be attached to a staff with a minimum length of 6′ to the bottom of the sign.
4. Any lights incorporated into the STOP or SLOW paddle faces shall only be as specifically described in Section 6E.03 Hand Signaling Devices in the TMUTCD.

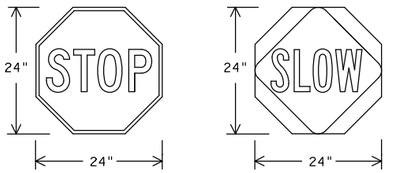

Background - Red
Legend & Border - White

Background - Orange
Legend & Border - Black

SHEETING REQUIREMENTS (WHEN USED AT NIGHT)		
USAGE	COLOR	SIGN FACE MATERIAL
BACKGROUND	RED	TYPE B OR C SHEETING
BACKGROUND	ORANGE	TYPE B_{FL} OR C_{FL} SHEETING
LEGEND & BORDER	WHITE	TYPE B OR C SHEETING
LEGEND & BORDER	BLACK	ACRYLIC NON-REFLECTIVE FILM

CONTRACTOR REQUIREMENTS FOR MAINTAINING PERMANENT SIGNS WITHIN THE PROJECT LIMITS

1. Permanent signs are used to give notice of traffic laws or regulations, call attention to conditions that are potentially hazardous to traffic operations, show route designations, destinations, directions, distances, services, points of interest, and other geographical, recreational, specific service (LOGO), or cultural information. Drivers proceeding through a work zone need the same, if not better route guidance as normally installed on a roadway without construction.
2. When permanent regulatory or warning signs conflict with work zone conditions, remove or cover the permanent signs until the permanent sign message matches the roadway condition. For details for covering large guide signs see the TS-CD standard.
3. When existing permanent signs are moved and relocated due to construction purposes, they shall be visible to motorists at all times.
4. If existing signs are to be relocated on their original supports, they shall be installed on crashworthy bases as shown on the SMD Standard sheets. The signs shall meet the required mounting heights shown on the BC Sheets or the SMD Standards. This work should be paid for under the appropriate pay item for relocating existing signs.
5. If permanent signs are to be removed and relocated using temporary supports, the Contractor shall use crashworthy supports as shown on the BC standard sheets, TLRS standard sheets or the CWZTCD list. The signs shall meet the required mounting heights shown on the BC, or the SMD standard sheets during construction. This work should be paid for under the appropriate pay item for relocating existing signs.
6. Any sign or traffic control device that is struck or damaged by the Contractor or his/her construction equipment shall be replaced as soon as possible by the Contractor to ensure proper guidance for the motorists. This will be subsidiary to Item 502.

GENERAL NOTES FOR WORK ZONE SIGNS

1. Contractor shall install and maintain signs in a straight and plumb condition and/or as directed by the Engineer.
2. Wooden sign posts shall be painted white.
3. Barricades shall NOT be used as sign supports.
4. All signs shall be installed in accordance with the plans or as directed by the Engineer. Signs shall be used to regulate, warn, and guide the traveling public safely through the work zone.
5. The Contractor may furnish either the sign design shown in the plans or in the "Standard Highway Sign Designs for Texas" (SHSD). The Engineer/Inspector may require the Contractor to furnish other work zone signs that are shown in the TMUTCD but may have been omitted from the plans. Any variation in the plans shall be documented by written agreement between the Engineer and the Contractor's Responsible Person. All changes must be documented in writing before being implemented. This can include documenting the changes in the Inspector's TxDOT diary and having both the Inspector and Contractor initial and date the agreed upon changes.
6. The Contractor shall furnish sign supports listed in the "Compliant Work Zone Traffic Control Device List" (CWZTCD) for small roadside signs. Supports for temporary large roadside signs shall meet the requirements detailed on the Temporary Large Roadside Signs (TLRS) standard sheets.The Contractor shall install the sign support in accordance with the manufacturer's recommendations. If there is a question regarding installation procedures, the Contractor shall furnish the Engineer a copy of the manufacturer's installation recommendations so the Engineer can verify the correct procedures are being followed.
7. The Contractor is responsible for installing signs on approved supports and replacing signs with damaged or cracked substrates and/or damaged or marred reflective sheeting as directed by the Engineer/Inspector.
8. Identification markings may be shown only on the back of the sign substrate. The maximum height of letters and/or company logos used for identification shall be 1 inch.
9. The Contractor shall replace damaged wood posts. New or damaged wood sign posts shall not be spliced.

DURATION OF WORK (as defined by the "Texas Manual on Uniform Traffic Control Devices" Part 6)

1. The types of sign supports, sign mounting height,the size of signs, and the type of sign substrates can vary based on the type of work being performed. The Engineer is responsible for selecting the appropriate size sign for the type of work being performed. The Contractor is responsible for ensuring the sign support, sign mounting height and substrate meets manufacturer's recommendations in regard to crashworthiness and duration of work requirements.
   a. Long-term stationary - work that occupies a location more than 3 days.
   b. Intermediate-term stationary - work that occupies a location more than one daylight period up to 3 days, or nighttime work lasting more than one hour.
   c. Short-term stationary - daytime work that occupies a location for more than 1 hour in a single daylight period.
   d. Short, duration - work that occupies a location up to 1 hour.
   e. Mobile - work that moves continuously or intermittently (stopping for up to approximately 15 minutes.)

SIGN MOUNTING HEIGHT

1. The bottom of Long-term/Intermediate-term signs shall be at least 7 feet, but not more than 9 feet, above the paved surface, except as shown for supplemental plaques mounted below other signs.
2. The bottom of Short-term/Short Duration signs shall be a minimum of 1 foot above the pavement surface but no more than 2 feet above the ground.
3. Long-term/Intermediate-term Signs may be used in lieu of Short-term/Short Duration signing.
4. Short-term/Short Duration signs shall be used only during daylight and shall be removed at the end of the workday or raised to appropriate Long-term/Intermediate sign height.
5. Regulatory signs shall be mounted at least 7 feet, but not more than 9 feet, above the paved surface regardless of work duration.

SIZE OF SIGNS

1. The Contractor shall furnish the sign sizes shown on BC (2) unless otherwise shown in the plans or as directed by the Engineer.

SIGN SUBSTRATES

1. The Contractor shall ensure the sign substrate is installed in accordance with the manufacturer's recommendations for the type of sign support that is being used. The CWZTCD lists each substrate that can be used on the different types and models of sign supports.
2. "Mesh" type materials are NOT an approved sign substrate, regardless of the tightness of the weave.
3. All wooden individual sign panels fabricated from 2 or more pieces shall have one or more plywood cleat, 1/2" thick by 6" wide, fastened to the back of the sign and extending fully across the sign. The cleat shall be attached to the back of the sign using wood screws that do not penetrate the face of the sign panel. The screws shall be placed on both sides of the splice and spaced at 6" centers. The Engineer may approve other methods of splicing the sign face.

REFLECTIVE SHEETING

1. All signs shall be retroreflective and constructed of sheeting meeting the color and retro-reflectivity requirements of DMS-8300 for rigid signs or DMS-8310 for roll-up signs. The web address for DMS specifications is shown on BC(1).
2. White sheeting, meeting the requirements of DMS-8300 Type A, shall be used for signs with a white background.
3. Orange sheeting, meeting the requirements of DMS-8300 Type B_{FL} or Type C_{FL}, shall be used for rigid signs with orange backgrounds.

SIGN LETTERS

1. All sign letters and numbers shall be clear, and open rounded type uppercase alphabet letters as approved by the Federal Highway Administration (FHWA) and as published in the "Standard Highway Sign Design for Texas" manual. Signs, letters and numbers shall be of first class workmanship in accordance with Department Standards and Specifications.

REMOVING OR COVERING

1. When sign messages may be confusing or do not apply, the signs shall be removed or completely covered.
2. Long-term stationary or intermediate stationary signs installed on square metal tubing may be turned away from traffic 90 degrees when the sign message is not applicable. This technique may not be used for signs installed in the median of divided highways or near any intersections where the sign may be seen from approaching traffic.
3. Signs installed on wooden skids shall not be turned at 90 degree angles to the roadway. These signs should be removed or completely covered when not required.
4. When signs are covered, the material used shall be opaque, such as heavy mil black plastic, or other materials which will cover the entire sign face and maintain their opaque properties under automobile headlights at night, without damaging the sign sheeting.
5. Burlap shall NOT be used to cover signs.
6. Duct tape or other adhesive material shall NOT be affixed to a sign face.
7. Signs and anchor stubs shall be removed and holes backfilled upon completion of work.

SIGN SUPPORT WEIGHTS

1. Where sign supports require the use of weights to keep from turning over, the use of sandbags with dry, cohesionless sand should be used.
2. The sandbags will be tied shut to keep the sand from spilling and to maintain a constant weight.
3. Rock, concrete, iron, steel or other solid objects shall not be permitted for use as sign support weights.
4. Sandbags should weigh a minimum of 35 lbs and a maximum of 50 lbs.
5. Sandbags shall be made of a durable material that tears upon vehicular impact. Rubber (such as tire inner tubes) shall NOT be used.
6. Rubber ballasts designed for channelizing devices should not be used for ballast on portable sign supports. Sign supports designed and manufactured with rubber bases may be used when shown on the CWZTCD list.
7. Sandbags shall only be placed along or laid over the base supports of the traffic control device and shall not be suspended above ground level or hung with rope, wire, chains or other fasteners. Sandbags shall be placed along the length of the skids to weigh down the sign support.
8. Sandbags shall NOT be placed under the skid and shall not be used to level sign supports placed on slopes.

FLAGS ON SIGNS

1. Flags may be used to draw attention to warning signs. When used, the flag shall be 16 inches square or larger and shall be orange or fluorescent red-orange in color. Flags shall not be allowed to cover any portion of the sign face.

Texas Department of Transportation

Traffic Safety Division Standard

BARRICADE AND CONSTRUCTION TEMPORARY SIGN NOTES

BC(4)-21

FILE: bc-21.dgn	DN: TxDOT	CK: TxDOT	DW: TxDOT	CK: TxDOT
©TxDOT November 2002	CONT	SECT	JOB	HIGHWAY
REVISIONS	0912	73	215	FM 270, ETC
9-07 8-14	DIST	COUNTY		SHEET NO.
7-13 5-21	HOU	GALVESTON		56

DATE: 8/1/2023 11:31:54 PM
FILE: $FILE$

DISCLAIMER:
The use of this standard is governed by the "Texas Engineering Practice Act". No warranty of any kind is made by TxDOT for any purpose whatsoever. TxDOT assumes no responsibility for the conversion of this standard to other formats or for incorrect results or damages resulting from its use.

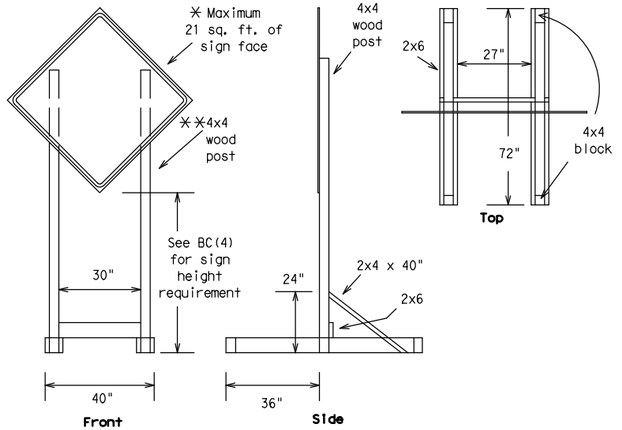

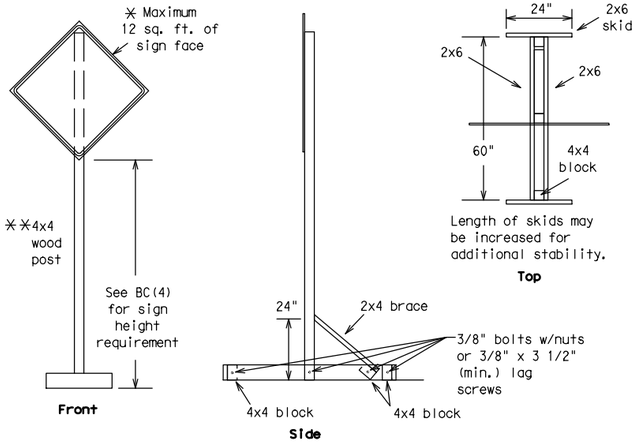

SKID MOUNTED WOOD SIGN SUPPORTS

* LONG/INTERMEDIATE TERM STATIONARY - PORTABLE SKID MOUNTED SIGN SUPPORTS

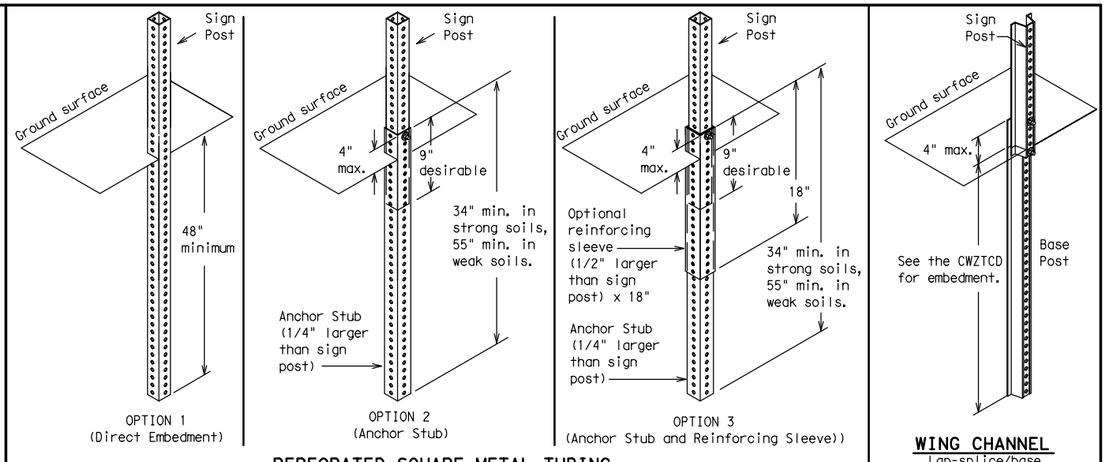

GROUND MOUNTED SIGN SUPPORTS

Refer to the CWZTCD and the manufacturer's installation procedure for each type sign support.
The maximum sign square footage shall adhere to the manufacturer's recommendation.
Two post installations can be used for larger signs.

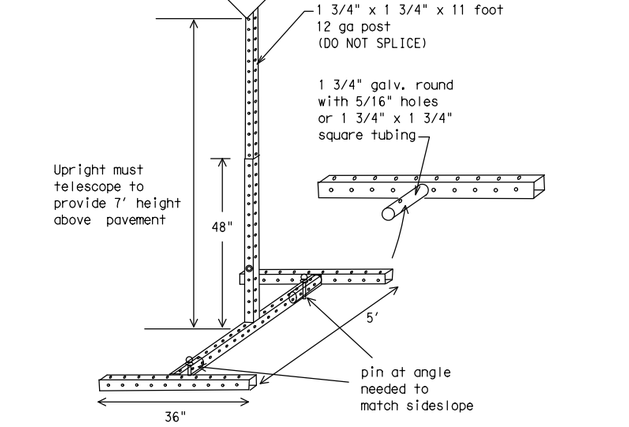

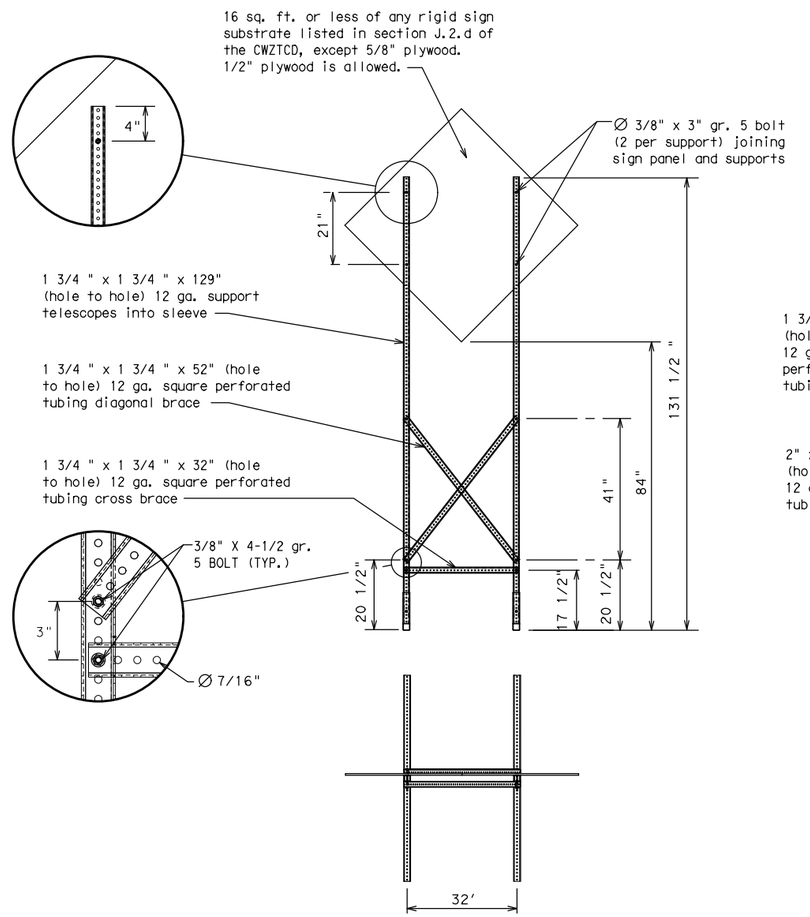

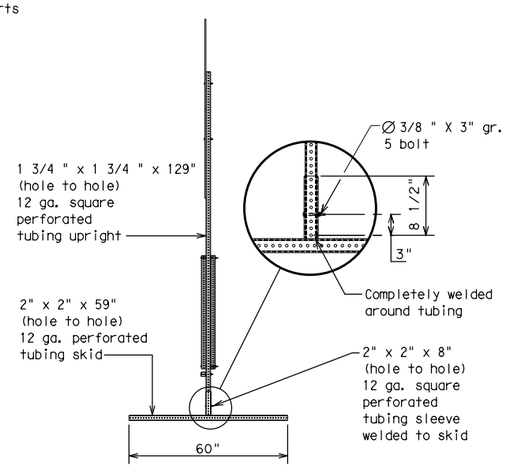

SKID MOUNTED PERFORATED SQUARE STEEL TUBING SIGN SUPPORTS

* LONG/INTERMEDIATE TERM STATIONARY - PORTABLE SKID MOUNTED SIGN SUPPORTS

WEDGE ANCHORS

Both steel and plastic Wedge Anchor Systems as shown on the SMD Standard Sheets may be used as temporary sign supports for signs up to 10 square feet of sign face. They may be set in concrete or in sturdy soils if approved by the Engineer. (See web address for "Traffic Engineering Standard Sheets" on BC(1)).

OTHER DESIGNS

MORE DETAILS OF APPROVED LONG/INTERMEDIATE AND SHORT TERM SUPPORTS CAN BE FOUND ON THE CWZTCD LIST. SEE BC(1) FOR WEBSITE LOCATION.

GENERAL NOTES

1. Nails may be used in the assembly of wooden sign supports, but 3/8" bolts with nuts or 3/8" x 3 1/2" lag screws must be used on every joint for final connection.
2. No more than 2 sign posts shall be placed within a 7 ft. circle, except for specific materials noted on the CWZTCD List.
3. When project is completed, all sign supports and foundations shall be removed from the project site. This will be considered subsidiary to Item 502.

* See BC(4) for definition of "Work Duration."

** Wood sign posts MUST be one piece. Splicing will NOT be allowed. Posts shall be painted white.

□ See the CWZTCD for the type of sign substrate that can be used for each approved sign support.

Texas Department of Transportation — Traffic Safety Division Standard

BARRICADE AND CONSTRUCTION TYPICAL SIGN SUPPORT

BC(5)-21

FILE: bc-21.dgn	DN: TxDOT	CK: TxDOT	DW: TxDOT	CK: TxDOT
©TxDOT November 2002	CONT	SECT	JOB	HIGHWAY
REVISIONS	0912	73	215	FM 270, ETC
9-07 8-14	DIST	COUNTY		SHEET NO.
7-13 5-21	HOU	GALVESTON		57

DATE: 8/1/2023 11:31:54 PM
FILE: $FILE$

DISCLAIMER:
The use of this standard is governed by the "Texas Engineering Practice Act". No warranty of any kind is made by TxDOT for any purpose whatsoever. TxDOT assumes no responsibility for the conversion of this standard to other formats or for incorrect results or damages resulting from its use.

WHEN NOT IN USE, REMOVE THE PCMS FROM THE RIGHT-OF-WAY OR PLACE THE PCMS BEHIND BARRIER OR GUARDRAIL WITH SIGN PANEL TURNED PARALLEL TO TRAFFIC

PORTABLE CHANGEABLE MESSAGE SIGNS

1. The Engineer/Inspector shall approve all messages used on portable changeable message signs (PCMS).
2. Messages on PCMS should contain no more than 8 words (about four to eight characters per word), not including simple words such as "TO," "FOR," "AT," etc.
3. Messages should consist of a single phase, or two phases that alternate. Three-phase messages are not allowed. Each phase of the message should convey a single thought, and must be understood by itself.
4. Use the word "EXIT" to refer to an exit ramp on a freeway; i.e., "EXIT CLOSED." Do not use the term "RAMP."
5. Always use the route or interstate designation (IH, US, SH, FM) along with the number when referring to a roadway.
6. When in use, the bottom of a stationary PCMS message panel should be a minimum 7 feet above the roadway, where possible.
7. The message term "WEEKEND" should be used only if the work is to start on Saturday morning and end by Sunday evening at midnight. Actual days and hours of work should be displayed on the PCMS if work is to begin on Friday evening and/or continue into Monday morning.
8. The Engineer/Inspector may select one of two options which are available for displaying a two-phase message on a PCMS. Each phase may be displayed for either four seconds each or for three seconds each.
9. Do not "flash" messages or words included in a message. The message should be steady burn or continuous while displayed.
10. Do not present redundant information on a two-phase message; i.e., keeping two lines of the message the same and changing the third line.
11. Do not use the word "Danger" in message.
12. Do not display the message "LANES SHIFT LEFT" or "LANES SHIFT RIGHT" on a PCMS. Drivers do not understand the message.
13. Do not display messages that scroll horizontally or vertically across the face of the sign.
14. The following table lists abbreviated words and two-word phrases that are acceptable for use on a PCMS. Both words in a phrase must be displayed together. Words or phrases not on this list should not be abbreviated, unless shown in the TMUTCD.
15. PCMS character height should be at least 18 inches for trailer mounted units. They should be visible from at least 1/2 (.5) mile and the text should be legible from at least 600 feet at night and 800 feet in daylight. Truck mounted units must have a character height of 10 inches and must be legible from at least 400 feet.
16. Each line of text should be centered on the message board rather than left or right justified.
17. If disabled, the PCMS should default to an illegible display that will not alarm motorists and will only be used to alert workers that the PCMS has malfunctioned. A pattern such as a series of horizontal solid bars is appropriate.

WORD OR PHRASE	ABBREVIATION
Access Road	ACCS RD
Alternate	ALT
Avenue	AVE
Best Route	BEST RTE
Boulevard	BLVD
Bridge	BRDG
Cannot	CANT
Center	CTR
Construction Ahead	CONST AHD
CROSSING	XING
Detour Route	DETOUR RTE
Do Not	DONT
East	E
Eastbound	(route) E
Emergency	EMER
Emergency Vehicle	EMER VEH
Entrance, Enter	ENT
Express Lane	EXP LN
Expressway	EXPWY
XXXX Feet	XXXX FT
Fog Ahead	FOG AHD
Freeway	FRWY, FWY
Freeway Blocked	FWY BLKD
Friday	FRI
Hazardous Driving	HAZ DRIVING
Hazardous Material	HAZMAT
High-Occupancy	HOV
Vehicle Highway	HWY
Hour(s)	HR, HRS
Information	INFO
It Is	ITS
Junction	JCT
Left	LFT
Left Lane	LFT LN
Lane Closed	LN CLOSED
Lower Level	LWR LEVEL
Maintenance	MAINT

WORD OR PHRASE	ABBREVIATION
Major	MAJ
Miles	MI
Miles Per Hour	MPH
Minor	MNR
Monday	MON
Normal	NORM
North	N
Northbound	(route) N
Parking	PKING
Road	RD
Right Lane	RT LN
Saturday	SAT
Service Road	SERV RD
Shoulder	SHLDR
Slippery	SLIP
South	S
Southbound	(route) S
Speed	SPD
Street	ST
Sunday	SUN
Telephone	PHONE
Temporary	TEMP
Thursday	THURS
To Downtown	TO DWNTN
Traffic	TRAF
Travelers	TRVLRS
Tuesday	TUES
Time Minutes	TIME MIN
Upper Level	UPR LEVEL
Vehicles (s)	VEH, VEHS
Warning	WARN
Wednesday	WED
Weight Limit	WT LIMIT
West	W
Westbound	(route) W
Wet Pavement	WET PVMT
Will Not	WONT

Roadway designation # IH-number, US-number, SH-number, FM-number

RECOMMENDED PHASES AND FORMATS FOR PCMS MESSAGES DURING ROADWORK ACTIVITIES

(The Engineer may approve other messages not specifically covered here.)

Phase 1: Condition Lists

Road/Lane/Ramp Closure List

- FREEWAY CLOSED X MILE
- FRONTAGE ROAD CLOSED
- ROAD CLOSED AT SH XXX
- SHOULDER CLOSED XXX FT
- ROAD CLSD AT FM XXXX
- RIGHT LN CLOSED XXX FT
- RIGHT X LANES CLOSED
- RIGHT X LANES OPEN
- CENTER LANE CLOSED
- DAYTIME LANE CLOSURES
- NIGHT LANE CLOSURES
- I-XX SOUTH EXIT CLOSED
- VARIOUS LANES CLOSED
- EXIT XXX CLOSED X MILE
- EXIT CLOSED
- RIGHT LN TO BE CLOSED
- MALL DRIVEWAY CLOSED
- X LANES CLOSED TUE - FRI
- XXXXXXXX BLVD CLOSED

Other Condition List

- ROADWORK XXX FT
- ROAD REPAIRS XXXX FT
- FLAGGER XXXX FT
- LANE NARROWS XXXX FT
- RIGHT LN NARROWS XXXX FT
- TWO-WAY TRAFFIC XX MILE
- MERGING TRAFFIC XXXX FT
- CONST TRAFFIC XXX FT
- LOOSE GRAVEL XXXX FT
- UNEVEN LANES XXXX FT
- DETOUR X MILE
- ROUGH ROAD XXXX FT
- ROADWORK PAST SH XXXX
- ROADWORK NEXT FRI-SUN
- BUMP XXXX FT
- US XXX EXIT X MILES
- TRAFFIC SIGNAL XXXX FT
- LANES SHIFT ✳

✳ LANES SHIFT in Phase 1 must be used with STAY IN LANE in Phase 2.

Phase 2: Possible Component Lists

Action to Take/Effect on Travel List

- MERGE RIGHT
- FORM X LINES RIGHT
- DETOUR NEXT X EXITS
- USE XXXXX RD EXIT
- USE EXIT XXX
- USE EXIT I-XX NORTH
- STAY ON US XXX SOUTH
- USE I-XX E TO I-XX N
- TRUCKS USE US XXX N
- WATCH FOR TRUCKS
- WATCH FOR TRUCKS
- EXPECT DELAYS
- EXPECT DELAYS
- PREPARE TO STOP
- REDUCE SPEED XXX FT
- END SHOULDER USE
- USE OTHER ROUTES
- WATCH FOR WORKERS
- STAY IN LANE ✳

Location List

- AT FM XXXX
- BEFORE RAILROAD CROSSING
- NEXT X MILES
- PAST US XXX EXIT
- XXXXXXX TO XXXXXXX
- US XXX TO FM XXXX

Warning List

- SPEED LIMIT XX MPH
- MAXIMUM SPEED XX MPH
- MINIMUM SPEED XX MPH
- ADVISORY SPEED XX MPH
- RIGHT LANE EXIT
- USE CAUTION
- DRIVE SAFELY
- DRIVE WITH CARE

✳✳ Advance Notice List

- TUE-FRI XX AM- X PM
- APR XX-XX X PM-X AM
- BEGINS MONDAY
- BEGINS MAY XX
- MAY X-X XX PM - XX AM
- NEXT FRI-SUN
- XX AM TO XX PM
- NEXT TUE AUG XX
- TONIGHT XX PM- XX AM

✳✳ See Application Guidelines Note 6.

APPLICATION GUIDELINES

1. Only 1 or 2 phases are to be used on a PCMS.
2. The 1st phase (or both) should be selected from the "Road/Lane/Ramp Closure List" and the "Other Condition List".
3. A 2nd phase can be selected from the "Action to Take/Effect on Travel, Location, General Warning, or Advance Notice Phase Lists".
4. A Location Phase is necessary only if a distance or location is not included in the first phase selected.
5. If two PCMS are used in sequence, they must be separated by a minimum of 1000 ft. Each PCMS shall be limited to two phases, and should be understandable by themselves.
6. For advance notice, when the current date is within seven days of the actual work date, calendar days should be replaced with days of the week. Advance notification should typically be for no more than one week prior to the work.

WORDING ALTERNATIVES

1. The words RIGHT, LEFT and ALL can be interchanged as appropriate.
2. Roadway designations IH, US, SH, FM and LP can be interchanged as appropriate.
3. EAST, WEST, NORTH and SOUTH (or abbreviations E, W, N and S) can be interchanged as appropriate.
4. Highway names and numbers replaced as appropriate.
5. ROAD, HIGHWAY and FREEWAY can be interchanged as needed.
6. AHEAD may be used instead of distances if necessary.
7. FT and MI, MILE and MILES interchanged as appropriate.
8. AT, BEFORE and PAST interchanged as needed.
9. Distances or AHEAD can be eliminated from the message if a location phase is used.

PCMS SIGNS WITHIN THE R.O.W. SHALL BE BEHIND GUARDRAIL OR CONCRETE BARRIER OR SHALL HAVE A MINIMUM OF FOUR (4) PLASTIC DRUMS PLACED PERPENDICULAR TO TRAFFIC ON THE UPSTREAM SIDE OF THE PCMS, WHEN EXPOSED TO ONE DIRECTION OF TRAFFIC. WHEN EXPOSED TO TWO WAY TRAFFIC, THE FOUR DRUMS SHOULD BE PLACED WITH ONE DRUM AT EACH OF THE FOUR CORNERS OF THE UNIT.

FULL MATRIX PCMS SIGNS

1. When Full Matrix PCMS signs are used, the character height and legibility/visibility requirements shall be maintained as listed in Note 15 under "PORTABLE CHANGEABLE MESSAGE SIGNS" above.
2. When symbol signs, such as the "Flagger Symbol"(CW20-7) are represented graphically on the Full Matrix PCMS sign and, with the approval of the Engineer, it shall maintain the legibility/visibility requirement listed above.
3. When symbol signs are represented graphically on the Full Matrix PCMS, they shall only supplement the use of the static sign represented, and shall not substitute for, or replace that sign.
4. A full matrix PCMS may be used to simulate a flashing arrow board provided it meets the visibility, flash rate and dimming requirements on BC(7), for the same size arrow.

Texas Department of Transportation — Traffic Safety Division Standard

BARRICADE AND CONSTRUCTION PORTABLE CHANGEABLE MESSAGE SIGN (PCMS)

BC(6)-21

FILE: bc-21.dgn	DN: TxDOT	CK: TxDOT	DW: TxDOT	CK: TxDOT
©TxDOT November 2002	CONT	SECT	JOB	HIGHWAY
REVISIONS	0912	73	215	FM 270, ETC
9-07 8-14	DIST	COUNTY		SHEET NO.
7-13 5-21	HOU	GALVESTON		58

DATE: 8/1/2023 11:31:55 PM
FILE: $FILE$

DISCLAIMER:
The use of this standard is governed by the "Texas Engineering Practice Act". No warranty of any kind is made by TxDOT for any purpose whatsoever. TxDOT assumes no responsibility for the conversion of this standard to other formats or for incorrect results or damages resulting from its use.

DATE: 8/1/2023 11:31:56 PM
FILE: $FILE$

1. Barrier Reflectors shall be pre-qualified, and conform to the color and reflectivity requirements of DMS-8600. A list of prequalified Barrier Reflectors can be found at the Material Producer List web address shown on BC(1).
2. Color of Barrier Reflectors shall be as specified in the TMUTCD. The cost of the reflectors shall be considered subsidiary to Item 512.

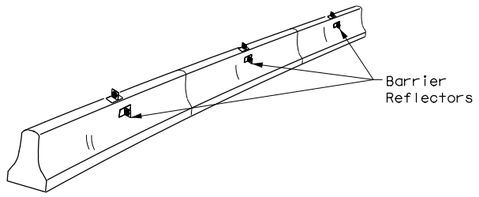

CONCRETE TRAFFIC BARRIER (CTB)

3. Where traffic is on one side of the CTB, two (2) Barrier Reflectors shall be mounted in approximately the midsection of each section of CTB. An alternate mounting location is uniformly spaced at one end of each CTB. This will allow for attachment of a barrier grapple without damaging the reflector. The Barrier Reflector mounted on the side of the CTB shall be located directly below the reflector mounted on top of the barrier, as shown in the detail above.
4. Where CTB separates two-way traffic, three barrier reflectors shall be mounted on each section of CTB. The reflector unit on top shall have two yellow reflective faces (Bi-Directional)while the reflectors on each side of the barrier shall have one yellow reflective face, as shown in the detail above.
5. When CTB separates traffic traveling in the same direction, no barrier reflectors will be required on top of the CTB.
6. Barrier Reflector units shall be yellow or white in color to match the edgeline being supplemented.
7. Maximum spacing of Barrier Reflectors is forty (40) feet.
8. Pavement markers or temporary flexible-reflective roadway marker tabs shall NOT be used as CTB delineation.
9. Attachment of Barrier Reflectors to CTB shall be per manufacturer's recommendations.
10. Missing or damaged Barrier Reflectors shall be replaced as directed by the Engineer.
11. Single slope barriers shall be delineated as shown on the above detail.

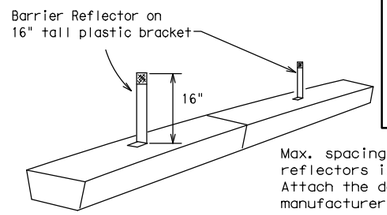

Max. spacing of barrier reflectors is 20 feet. Attach the delineators as per manufacturer's recommendations.

LOW PROFILE CONCRETE BARRIER (LPCB)

LOW PROFILE CONCRETE BARRIER (LPCB) USED IN WORK ZONES

LPCB is approved for use in work zone locations, where the posted speed is 45mph, or less. See Roadway Standard Sheet LPCB.

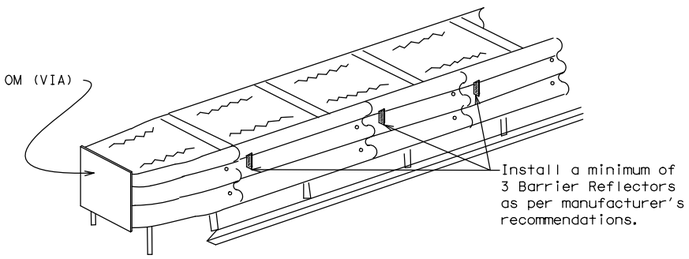

DELINEATION OF END TREATMENTS

END TREATMENTS FOR CTB'S USED IN WORK ZONES

End treatments used on CTB's in work zones shall meet the apppropriate crashworthy standards as defined in the Manual for Assessing Safety Hardware (MASH). Refer to the CWZTCD List for approved end treatments and manufacturers.

BARRIER REFLECTORS FOR CONCRETE TRAFFIC BARRIER AND ATTENUATORS

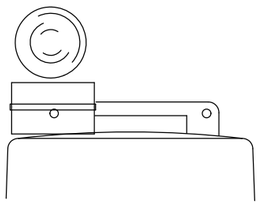

Type C Warning Light or approved substitute mounted on a drum adjacent to the travel way.

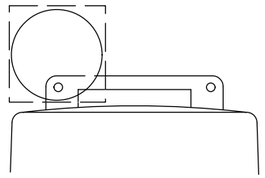

Warning reflector may be round or square.Must have a yellow reflective surface area of at least 30 square inches

WARNING LIGHTS

1. Warning lights shall meet the requirements of the TMUTCD.
2. Warning lights shall NOT be installed on barricades.
3. Type A-Low Intensity Flashing Warning Lights are commonly used with drums. They are intended to warn of or mark a potentially hazardous area. Their use shall be as indicated on this sheet and/or other sheets of the plans by the designation "FL". The Type A Warning Lights shall not be used with signs manufactured with Type B_{FL} or C_{FL} Sheeting meeting the requirements of Departmental Material Specification DMS-8300.
4. Type-C and Type D 360 degree Steady Burn Lights are intended to be used in a series for delineation to supplement other traffic control devices. Their use shall be as indicated on this sheet and/or other sheets of the plans by the designation "SB".
5. The Engineer/Inspector or the plans shall specify the location and type of warning lights to be installed on the traffic control devices.
6. When required by the Engineer, the Contractor shall furnish a copy of the warning lights certification. The warning light manufacturer will certify the warning lights meet the requirements of the latest ITE Purchase Specifications for Flashing and Steady-Burn Warning Lights.
7. When used to delineate curves, Type-C and Type D Steady Burn Lights should only be placed on the outside of the curve, not the inside.
8. The location of warning lights and warning reflectors on drums shall be as shown elsewhere in the plans.

WARNING LIGHTS MOUNTED ON PLASTIC DRUMS

1. Type A flashing warning lights are intended to warn drivers that they are approaching or are in a potentially hazardous area.
2. Type A random flashing warning lights are not intended for delineation and shall not be used in a series.
3. A series of sequential flashing warning lights placed on channelizing devices to form a merging taper may be used for delineation. If used, the successive flashing of the sequential warning lights should occur from the beginning of the taper to the end of the merging taper in order to identify the desired vehicle path. The rate of flashing for each light shall be 65 flashes per minute, plus or minus 10 flashes.
4. Type C and D steady-burn warning lights are intended to be used in a series to delineate the edge of the travel lane on detours, on lane changes, on lane closures, and on other similar conditions.
5. Type A, Type C and Type D warning lights shall be installed at locations as detailed on other sheets in the plans.
6. Warning lights shall not be installed on a drum that has a sign, chevron or vertical panel.
7. The maximum spacing for warning lights on drums should be identical to the channelizing device spacing.

WARNING REFLECTORS MOUNTED ON PLASTIC DRUMS AS A SUBSTITUTE FOR TYPE C (STEADY BURN) WARNING LIGHTS

1. A warning reflector or approved substitute may be mounted on a plastic drum as a substitute for a Type C, steady burn warning light at the discretion of the Contractor unless otherwise noted in the plans.
2. The warning reflector shall be yellow in color and shall be manufactured using a sign substrate approved for use with plastic drums listed on the CWZTCD.
3. The warning reflector shall have a minimum retroreflective surface area (one-side) of 30 square inches.
4. Round reflectors shall be fully reflectorized, including the area where attached to the drum.
5. Square substrates must have a minimum of 30 square inches of reflectorized sheeting. They do not have to be reflectorized where it attaches to the drum.
6. The side of the warning reflector facing approaching traffic shall have sheeting meeting the color and retroreflectivity requirements for DMS 8300-Type B or Type C.
7. When used near two-way traffic, both sides of the warning reflector shall be reflectorized.
8. The warning reflector should be mounted on the side of the handle nearest approaching traffic.
9. The maximum spacing for warning reflectors should be identical to the channelizing device spacing requirements.

Arrow Boards may be located behind channelizing devices in place for a shoulder taper or merging taper, otherwise they shall be delineated with four (4) channelizing devices placed perpendicular to traffic on the upstream side of traffic.

1. The Flashing Arrow Board should be used for all lane closures on multi-lane roadways, or slow moving maintenance or construction activities on the travel lanes.
2. Flashing Arrow Boards should not be used on two-lane, two-way roadways, detours, diversions or work on shoulders unless the "CAUTION" display (see detail below) is used.
3. The Engineer/Inspector shall choose all appropriate signs, barricades and/or other traffic control devices that should be used in conjunction with the Flashing Arrow Board.
4. The Flashing Arrow Board should be able to display the following symbols:

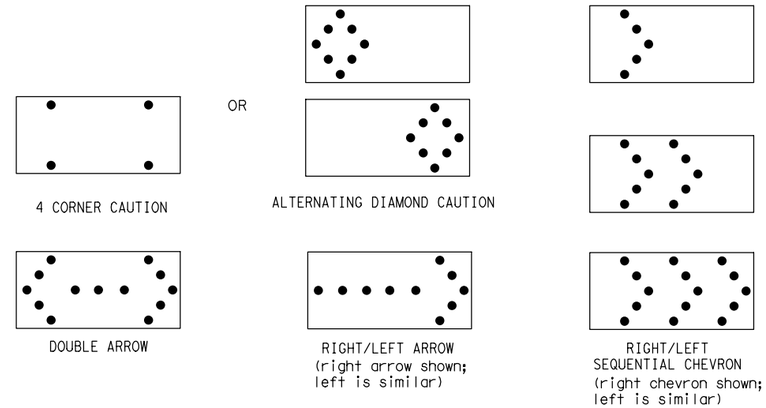

5. The "CAUTION" display consists of four corner lamps flashing simultaneously, or the Alternating Diamond Caution mode as shown.
6. The straight line caution display is NOT ALLOWED.
7. The Flashing Arrow Board shall be capable of minimum 50 percent dimming from rated lamp voltage. The flashing rate of the lamps shall not be less than 25 nor more than 40 flashes per minute.
8. Minimum lamp "on time" shall be approximately 50 percent for the flashing arrow and equal intervals of 25 percent for each sequential phase of the flashing chevron.
9. The sequential arrow display is NOT ALLOWED.
10. The flashing arrow display is the TxDOT standard; however, the sequential chevron display may be used during daylight operations.
11. The Flashing Arrow Board shall be mounted on a vehicle, trailer or other suitable support.
12. A Flashing Arrow Board SHALL NOT BE USED to laterally shift traffic.
13. A full matrix PCMS may be used to simulate a Flashing Arrow Board provided it meets visibility, flash rate and dimming requirements on this sheet for the same size arrow.
14. Minimum mounting height of trailer mounted Arrow Boards should be 7 feet from roadway to bottom of panel.

REQUIREMENTS			
TYPE	MINIMUM SIZE	MINIMUM NUMBER OF PANEL LAMPS	MINIMUM VISIBILITY DISTANCE
B	30 x 60	13	3/4 mile
C	48 x 96	15	1 mile

ATTENTION

Flashing Arrow Boards shall be equipped with automatic dimming devices.

WHEN NOT IN USE, REMOVE THE ARROW BOARD FROM THE RIGHT-OF-WAY OR PLACE THE ARROW BOARD BEHIND CONCRETE TRAFFIC BARRIER OR GUARDRAIL.

FLASHING ARROW BOARDS

TRUCK-MOUNTED ATTENUATORS

1. Truck-mounted attenuators (TMA) used on TxDOT facilities must meet the requirements outlined in the Manual for Assessing Safety Hardware (MASH).
2. Refer to the CWZTCD for the requirements of Level 2 or Level 3 TMAs.
3. Refer to the CWZTCD for a list of approved TMAs.
4. TMAs are required on freeways unless otherwise noted in the plans.
5. A TMA should be used anytime that it can be positioned 30 to 100 feet in advance of the area of crew exposure without adversely affecting the work performance.
6. The only reason a TMA should not be required is when a work area is spread down the roadway and the work crew is an extended distance from the TMA.

Texas Department of Transportation

Traffic Safety Division Standard

BARRICADE AND CONSTRUCTION ARROW PANEL, REFLECTORS, WARNING LIGHTS & ATTENUATOR

BC(7)-21

FILE: bc-21.dgn	DN: TxDOT	CK: TxDOT	DW: TxDOT	CK: TxDOT
© TxDOT November 2002	CONT	SECT	JOB	HIGHWAY
REVISIONS	0912	73	215	FM 270, ETC
9-07 8-14	DIST	COUNTY		SHEET NO.
7-13 5-21	HOU	GALVESTON		59

101

DISCLAIMER:
The use of this standard is governed by the "Texas Engineering Practice Act". No warranty of any kind is made by TxDOT for any purpose whatsoever. TxDOT assumes no responsibility for the conversion of this standard to other formats or for incorrect results or damages resulting from its use.

GENERAL NOTES

1. For long term stationary work zones on freeways, drums shall be used as the primary channelizing device.
2. For intermediate term stationary work zones on freeways, drums should be used as the primary channelizing device but may be replaced in tangent sections by vertical panels, or 42" two-piece cones. In tangent sections, one-piece cones may be used with the approval of the Engineer but only if personnel are present on the project at all times to maintain the cones in proper position and location.
3. For short term stationary work zones on freeways, drums are the preferred channelizing device but may be replaced in tapers, transitions and tangent sections by vertical panels, two-piece cones or one-piece cones as approved by the Engineer.
4. Drums and all related items shall comply with the requirements of the current version of the "Texas Manual on Uniform Traffic Control Devices" (TMUTCD) and the "Compliant Work Zone Traffic Control Devices List" (CWZTCD).
5. Drums, bases, and related materials shall exhibit good workmanship and shall be free from objectionable marks or defects that would adversely affect their appearance or serviceability.
6. The Contractor shall have a maximum of 24 hours to replace any plastic drums identified for replacement by the Engineer/Inspector. The replacement device must be an approved device.

GENERAL DESIGN REQUIREMENTS

Pre-qualified plastic drums shall meet the following requirements:

1. Plastic drums shall be a two-piece design; the "body" of the drum shall be the top portion and the "base" shall be the bottom.
2. The body and base shall lock together in such a manner that the body separates from the base when impacted by a vehicle traveling at a speed of 20 MPH or greater but prevents accidental separation due to normal handling and/or air turbulence created by passing vehicles.
3. Plastic drums shall be constructed of lightweight flexible, and deformable materials. The Contractor shall NOT use metal drums or single piece plastic drums as channelization devices or sign supports.
4. Drums shall present a profile that is a minimum of 18 inches in width at the 36 inch height when viewed from any direction. The height of drum unit (body installed on base) shall be a minimum of 36 inches and a maximum of 42 inches.
5. The top of the drum shall have a built-in handle for easy pickup and shall be designed to drain water and not collect debris. The handle shall have a minimum of two widely spaced 9/16 inch diameter holes to allow attachment of a warning light, warning reflector unit or approved compliant sign.
6. The exterior of the drum body shall have a minimum of four alternating orange and white retroreflective circumferential stripes not less than 4 inches nor greater than 8 inches in width. Any non-reflectorized space between any two adjacent stripes shall not exceed 2 inches in width.
7. Bases shall have a maximum width of 36 inches, a maximum height of 4 inches, and a minimum of two footholds of sufficient size to allow base to be held down while separating the drum body from the base.
8. Plastic drums shall be constructed of ultra-violet stabilized, orange, high-density polyethylene (HDPE) or other approved material.
9. Drum body shall have a maximum unballasted weight of 11 lbs.
10. Drum and base shall be marked with manufacturer's name and model number.

RETROREFLECTIVE SHEETING

1. The stripes used on drums shall be constructed of sheeting meeting the color and retroreflectivity requirements of Departmental Materials Specification DMS-8300, "Sign Face Materials," Type A or Type B reflective sheeting shall be supplied unless otherwise specified in the plans.
2. The sheeting shall be suitable for use on and shall adhere to the drum surface such that, upon vehicular impact, the sheeting shall remain adhered in-place and exhibit no delaminating, cracking, or loss of retroreflectivity other than that loss due to abrasion of the sheeting surface.

BALLAST

1. Unballasted bases shall be large enough to hold up to 50 lbs. of sand. This base, when filled with the ballast material, should weigh between 35 lbs (minimum) and 50 lbs (maximum). The ballast may be sand in one to three sandbags separate from the base, sand in a sand-filled plastic base, or other ballasting devices as approved by the Engineer. Stacking of sandbags will be allowed, however height of sandbags above pavement surface may not exceed 12 inches.
2. Bases with built-in ballast shall weigh between 40 lbs. and 50 lbs. Built-in ballast can be constructed of an integral crumb rubber base or a solid rubber base.
3. Recycled truck tire sidewalls may be used for ballast on drums approved for this type of ballast on the CWZTCD list.
4. The ballast shall not be heavy objects, water, or any material that would become hazardous to motorists, pedestrians, or workers when the drum is struck by a vehicle.
5. When used in regions susceptible to freezing, drums shall have drainage holes in the bottoms so that water will not collect and freeze becoming a hazard when struck by a vehicle.
6. Ballast shall not be placed on top of drums.
7. Adhesives may be used to secure base of drums to pavement.

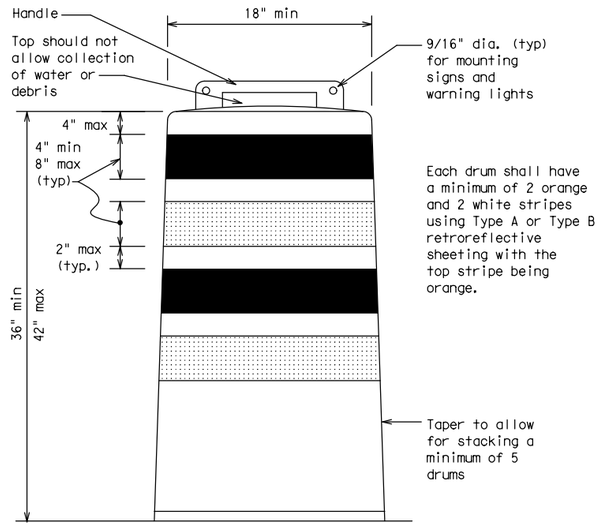

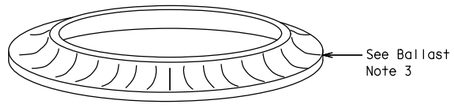

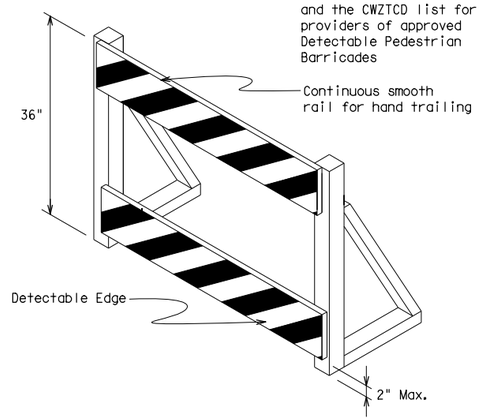

DETECTABLE PEDESTRIAN BARRICADES

1. When existing pedestrian facilities are disrupted, closed, or relocated in a TTC zone, the temporary facilities shall be detectable and include accessibility features consistent with the features present in the existing pedestrian facility. Refer to WZ(BTS-2) for Pedestrian Control requirements for Sidewalk Diversions, Sidewalk Detours and Crosswalk Closures.
2. Where pedestrians with visual disabilities normally use the closed sidewalk, a Detectable Pedestrian Barricade shall be placed across the full width of the closed sidewalk instead of a Type 3 Barricade.
3. Detectable pedestrian barricades similar to the one pictured above, longitudinal channelizing devices, some concrete barriers, and wood or chain link fencing with a continuous detectable edging can satisfactorily delineate a pedestrian path.
4. Tape, rope, or plastic chain strung between devices are not detectable, do not comply with the design standards in the "Americans with Disabilities Act Accessibility Guidelines (ADAAG)" and should not be used as a control for pedestrian movements.
5. Warning lights shall not be attached to detectable pedestrian barricades.
6. Detectable pedestrian barricades should use 8" nominal barricade rails as shown on BC(10) provided that the top rail provides a smooth continuous rail suitable for hand trailing with no splinters, burrs, or sharp edges.

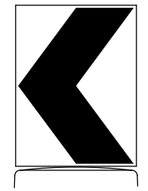

18" x 24" Sign
(Maximum Sign Dimension)
Chevron CW1-8, Opposing Traffic Lane Divider, Driveway sign D70a, Keep Right R4 series or other signs as approved by Engineer

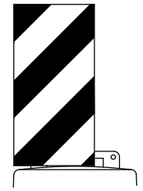

12" x 24"
Vertical Panel
mount with diagonals sloping down towards travel way

Plywood, Aluminum or Metal sign substrates shall NOT be used on plastic drums

SIGNS, CHEVRONS, AND VERTICAL PANELS MOUNTED ON PLASTIC DRUMS

1. Signs used on plastic drums shall be manufactured using substrates listed on the CWZTCD.
2. Chevrons and other work zone signs with an orange background shall be manufactured with Type B_{FL} or Type C_{FL} Orange sheeting meeting the color and retroreflectivity requirements of DMS-8300, "Sign Face Material," unless otherwise specified in the plans.
3. Vertical Panels shall be manufactured with orange and white sheeting meeting the requirements of DMS-8300 Type A or Type B. Diagonal stripes on Vertical Panels shall slope down toward the intended traveled lane.
4. Other sign messages (text or symbolic) may be used as approved by the Engineer. Sign dimensions shall not exceed 18 inches in width or 24 inches in height, except for the R9 series signs discussed in note 8 below.
5. Signs shall be installed using a 1/2 inch bolt (nominal) and nut, two washers, and one locking washer for each connection.
6. Mounting bolts and nuts shall be fully engaged and adequately torqued. Bolts should not extend more than 1/2 inch beyond nuts.
7. Chevrons may be placed on drums on the outside of curves, on merging tapers or on shifting tapers. When used in these locations, they may be placed on every drum or spaced not more than on every third drum. A minimum of three (3) should be used at each location called for in the plans.
8. R9-9, R9-10, R9-11 and R9-11a Sidewalk Closed signs which are 24 inches wide may be mounted on plastic drums, with approval of the Engineer.

Texas Department of Transportation | Traffic Safety Division Standard

BARRICADE AND CONSTRUCTION CHANNELIZING DEVICES

BC(8)-21

FILE: bc-21.dgn	DN: TxDOT	CK: TxDOT	DW: TxDOT	CK: TxDOT
©TxDOT November 2002	CONT	SECT	JOB	HIGHWAY
REVISIONS	0912	73	215	FM 270, ETC
4-03 8-14	DIST	COUNTY		SHEET NO.
9-07 5-21	HOU	GALVESTON		60
7-13				

102

DATE: 8/1/2023 11:31:56 PM
FILE: $FILE$

DISCLAIMER:
The use of this standard is governed by the "Texas Engineering Practice Act". No warranty of any kind is made by TxDOT for any purpose whatsoever. TxDOT assumes no responsibility for the conversion of this standard to other formats or for incorrect results or damages resulting from its use.

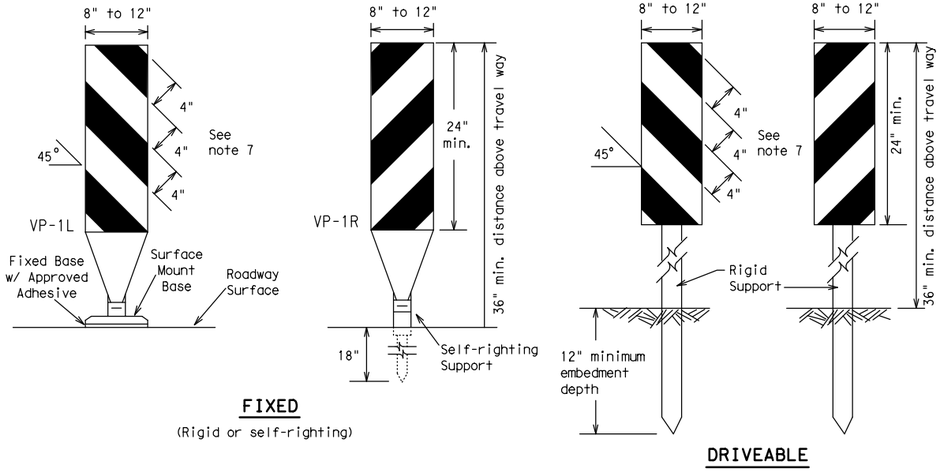

FIXED
(Rigid or self-righting)

DRIVEABLE

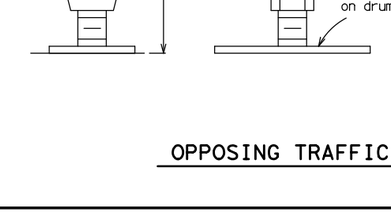

(Rigid or self-righting)

PORTABLE

1. Vertical Panels (VP's) are normally used to channelize traffic or divide opposing lanes of traffic.
2. VP's may be used in daytime or nighttime situations. They may be used at the edge of shoulder drop-offs and other areas such as lane transitions where positive daytime and nighttime delineation is required. The Engineer/Inspector shall refer to the Roadway Design Manual for additional requirements on the use VP's for drop-offs.
3. VP's should be mounted back to back if used at the edge of cuts adjacent to two-way two lane roadways. Stripes are to be reflective orange and reflective white and should always slope downward toward the travel lane.
4. VP's used on expressways and freeways or other high speed roadways, may have more than 270 square inches of retroreflective area facing traffic.
5. Self-righting supports are available with portable base. See "Compliant Work Zone Traffic Control Devices List" (CWZTCD).
6. Sheeting for the VP's shall be retroreflective Type A or Type B conforming to Departmental Material Specification DMS-8300, unless noted otherwise.
7. Where the height of reflective material on the vertical panel is 36 inches or greater, a panel stripe of 6 inches shall be used.

VERTICAL PANELS (VPs)

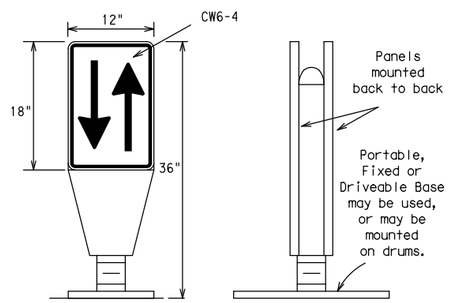

1. Opposing Traffic Lane Dividers (OTLD) are delineation devices designed to convert a normal one-way roadway section to two-way operation. OTLD's are used on temporary centerlines. The upward and downward arrows on the sign's face indicate the direction of traffic on either side of the divider. The base is secured to the pavement with an adhesive or rubber weight to minimize movement caused by a vehicle impact or wind gust.
2. The OTLD may be used in combination with 42" cones or VPs.
3. Spacing between the OTLD shall not exceed 500 feet. 42" cones or VPs placed between the OTLD's should not exceed 100 foot spacing.
4. The OTLD shall be orange with a black non-reflective legend. Sheeting for the OTLD shall be retroreflective Type B_{FL} or Type C_{FL} conforming to Departmental Material Specification DMS-8300, unless noted otherwise. The legend shall meet the requirements of DMS-8300.

OPPOSING TRAFFIC LANE DIVIDERS (OTLD)

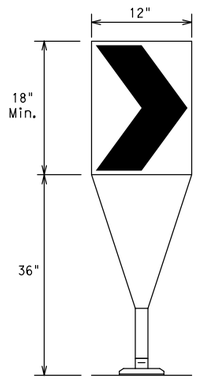

Fixed Base w/ Approved Adhesive (Driveable Base, or Flexible Support can be used)

1. The chevron shall be a vertical rectangle with a minimum size of 12 by 18 inches.
2. Chevrons are intended to give notice of a sharp change of alignment with the direction of travel and provide additional emphasis and guidance for vehicle operators with regard to changes in horizontal alignment of the roadway.
3. Chevrons, when used, shall be erected on the outside of a sharp curve or turn, or on the far side of an intersection. They shall be in line with and at right angles to approaching traffic. Spacing should be such that the motorist always has three in view, until the change in alignment eliminates its need.
4. To be effective, the chevron should be visible for at least 500 feet.
5. Chevrons shall be orange with a black nonreflective legend. Sheeting for the chevron shall be retroreflective Type B_{FL} or Type C_{FL} conforming to Departmental Material Specification DMS-8300, unless noted otherwise. The legend shall meet the requirements of DMS-8300.
6. For Long Term Stationary use on tapers or transitions on freeways and divided highways, self-righting chevrons may be used to supplement plastic drums but not to replace plastic drums.

CHEVRONS

GENERAL NOTES

1. Work Zone channelizing devices illustrated on this sheet may be installed in close proximity to traffic and are suitable for use on high or low speed roadways. The Engineer/Inspector shall ensure that spacing and placement is uniform and in accordance with the "Texas Manual on Uniform Traffic Control Devices" (TMUTCD).
2. Channelizing devices shown on this sheet may have a driveable, fixed or portable base. The requirement for self-righting channelizing devices must be specified in the General Notes or other plan sheets.
3. Channelizing devices on self-righting supports should be used in work zone areas where channelizing devices are frequently impacted by errant vehicles or vehicle related wind gusts making alignment of the channelizing devices difficult to maintain. Locations of these devices shall be detailed elsewhere in the plans. These devices shall conform to the TMUTCD and the "Compliant Work Zone Traffic Control Devices List" (CWZTCD).
4. The Contractor shall maintain devices in a clean condition and replace damaged, nonreflective, faded, or broken devices and bases as required by the Engineer/Inspector. The Contractor shall be required to maintain proper device spacing and alignment.
5. Portable bases shall be fabricated from virgin and/or recycled rubber. The portable bases shall weigh a minimum of 30 lbs.
6. Pavement surfaces shall be prepared in a manner that ensures proper bonding between the adhesives, the fixed mount bases and the pavement surface. Adhesives shall be prepared and applied according to the manufacturer's recommendations.
7. The installation and removal of channelizing devices shall not cause detrimental effects to the final pavement surfaces, including pavement surface discoloration or surface integrity. Driveable bases shall not be permitted on final pavement surfaces. The Engineer/Inspector shall approve all application and removal procedures of fixed bases.

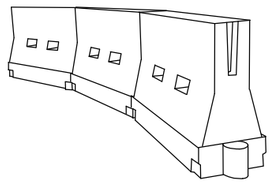

LONGITUDINAL CHANNELIZING DEVICES (LCD)

1. LCDs are crashworthy, lightweight, deformable devices that are highly visible, have good target value and can be connected together. They are not designed to contain or redirect a vehicle on impact.
2. LCDs may be used instead of a line of cones or drums.
3. LCDs shall be placed in accordance to application and installation requirements specific to the device, and used only when shown on the CWZTCD list.
4. LCDs should not be used to provide positive protection for obstacles, pedestrians or workers.
5. LCDs shall be supplemented with retroreflective delineation as required for temporary barriers on BC(7) when placed roughly parallel to the travel lanes.
6. LCDs used as barricades placed perpendicular to traffic should have at least one row of reflective sheeting meeting the requirements for barricade rails as shown on BC(10). Place reflective sheeting near the top of the LCD along the full length of the device.

WATER BALLASTED SYSTEMS USED AS BARRIERS

1. Water ballasted systems used as barriers shall not be used solely to channelize road users, but also to protect the work space per the appropriate Manual for Assessing Safety Hardware (MASH) crashworthiness requirements based on roadway speed and barrier application.
2. Water ballasted systems used to channelize vehicular traffic shall be supplemented with retroreflective delineation or channelizing devices to improve daytime/nighttime visibility. They may also be supplemented with pavement markings.
3. Water ballasted systems used as barriers shall be placed in accordance to application and installation requirements specific to the device, and used only when shown on the CWZTCD list.
4. Water ballasted systems used as barriers should not be used for a merging taper except in low speed (less than 45 MPH) urban areas. When used on a taper in a low speed urban area, the taper shall be delineated and the taper length should be designed to optimize road user operations considering the available geometric conditions.
5. When water ballasted systems used as barriers have blunt ends exposed to traffic, they should be attenuated as per manufacturer recommendations or flared to a point outside the clear zone.

If used to channelize pedestrians, longitudinal channelizing devices or water ballasted systems must have a continuous detectable bottom for users of long canes and the top of the unit shall not be less than 32 inches in height.

HOLLOW OR WATER BALLASTED SYSTEMS USED AS LONGITUDINAL CHANNELIZING DEVICES OR BARRIERS

Posted Speed	Formula	Minimum Desirable Taper Lengths ✻✻ 10′ Offset	11′ Offset	12′ Offset	Suggested Maximum Spacing of Channelizing Devices On a Taper	On a Tangent
30	$L=\frac{WS^2}{60}$	150′	165′	180′	30′	60′
35		205′	225′	245′	35′	70′
40		265′	295′	320′	40′	80′
45	L = WS	450′	495′	540′	45′	90′
50		500′	550′	600′	50′	100′
55		550′	605′	660′	55′	110′
60		600′	660′	720′	60′	120′
65		650′	715′	780′	65′	130′
70		700′	770′	840′	70′	140′
75		750′	825′	900′	75′	150′
80		800′	880′	960′	80′	160′

✻✻Taper lengths have been rounded off.
L=Length of Taper (FT.) W=Width of Offset (FT.)
S=Posted Speed (MPH)

SUGGESTED MAXIMUM SPACING OF CHANNELIZING DEVICES AND MINIMUM DESIRABLE TAPER LENGTHS

SHEET 9 OF 12

Texas Department of Transportation | Traffic Safety Division Standard

BARRICADE AND CONSTRUCTION CHANNELIZING DEVICES

BC(9)-21

FILE: bc-21.dgn	DN: TxDOT	CK: TxDOT	DW: TxDOT	CK: TxDOT
©TxDOT November 2002	CONT	SECT	JOB	HIGHWAY
REVISIONS	0912	73	215	FM 270, ETC
9-07 8-14	DIST	COUNTY		SHEET NO.
7-13 5-21	HOU	GALVESTON		61

103

DATE: 8/1/2023 11:31:57 PM
FILE: $FILE$

DISCLAIMER:
The use of this standard is governed by the "Texas Engineering Practice Act". No warranty of any kind is made by TxDOT for any purpose whatsoever. TxDOT assumes no responsibility for the conversion of this standard to other formats or for incorrect results or damages resulting from its use.

TYPE 3 BARRICADES

1. Refer to the Compliant Work Zone Traffic Control Devices List (CWZTCD) for details of the Type 3 Barricades and a list of all materials used in the construction of Type 3 Barricades.
2. Type 3 Barricades shall be used at each end of construction projects closed to all traffic.
3. Barricades extending across a roadway should have stripes that slope downward in the direction toward which traffic must turn in detouring. When both right and left turns are provided, the chevron striping may slope downward in both directions from the center of the barricade. Where no turns are provided at a closed road, striping should slope downward in both directions toward the center of roadway.
4. Striping of rails, for the right side of the roadway, should slope downward to the left. For the left side of the roadway, striping should slope downward to the right.
5. Identification markings may be shown only on the back of the barricade rails. The maximum height of letters and/or company logos used for identification shall be 1".
6. Barricades shall not be placed parallel to traffic unless an adequate clear zone is provided.
7. Warning lights shall NOT be installed on barricades.
8. Where barricades require the use of weights to keep from turning over, the use of sandbags with dry, cohesionless sand is recommended. The sandbags will be tied shut to keep the sand from spilling and to maintain a constant weight. Sand bags shall not be stacked in a manner that covers any portion of a barricade rails reflective sheeting. Rock, concrete, iron, steel or other solid objects will NOT be permitted. Sandbags should weigh a minimum of 35 lbs and a maximum of 50 lbs. Sandbags shall be made of a durable material that tears upon vehicular impact. Rubber (such as tire inner tubes) shall not be used for sandbags. Sandbags shall only be placed along or upon the base supports of the device and shall not be suspended above ground level or hung with rope, wire, chains or other fasteners.
9. Sheeting for barricades shall be retroreflective Type A or Type B conforming to Departmental Material Specification DMS-8300 unless otherwise noted.

Barricades shall NOT be used as a sign support.

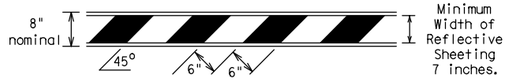

TYPICAL STRIPING DETAIL FOR BARRICADE RAIL

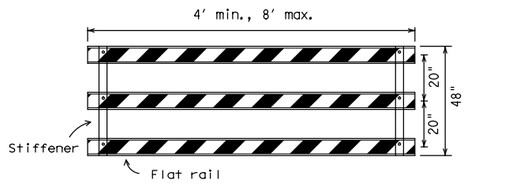

Stiffener may be inside or outside of support, but no more than 2 stiffeners shall be allowed on one barricade.

TYPICAL PANEL DETAIL
FOR SKID OR POST TYPE BARRICADES

Each roadway of a divided highway shall be barricaded in the same manner.

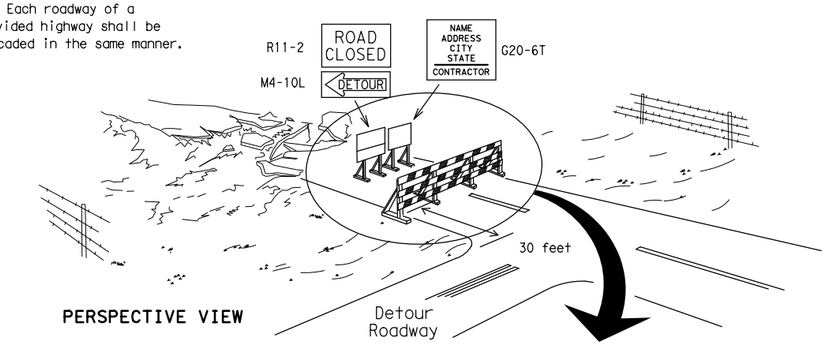

PERSPECTIVE VIEW

The three rails on Type 3 barricades shall be reflectorized orange and reflective white stripes on one side facing one-way traffic and both sides for two-way traffic.

Barricade striping should slant downward in the direction of detour.

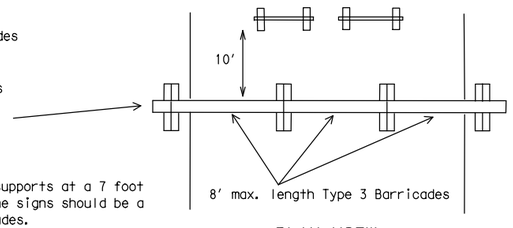

PLAN VIEW

1. Signs should be mounted on independent supports at a 7 foot mounting height in center of roadway. The signs should be a minimum of 10 feet behind Type 3 Barricades.
2. Advance signing shall be as specified elsewhere in the plans.

TYPE 3 BARRICADE (POST AND SKID) TYPICAL APPLICATION

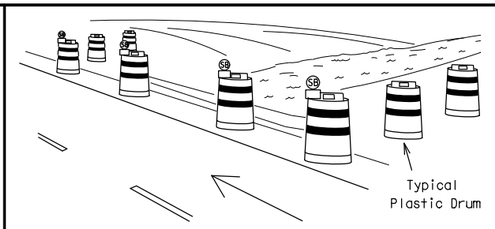

PERSPECTIVE VIEW

1. Where positive redirectional capability is provided, drums may be omitted.
2. Plastic construction fencing may be used with drums for safety as required in the plans.
3. Vertical Panels on flexible support may be substituted for drums when the shoulder width is less than 4 feet.
4. When the shoulder width is greater than 12 feet, steady-burn lights may be omitted if drums are used.
5. Drums must extend the length of the culvert widening.

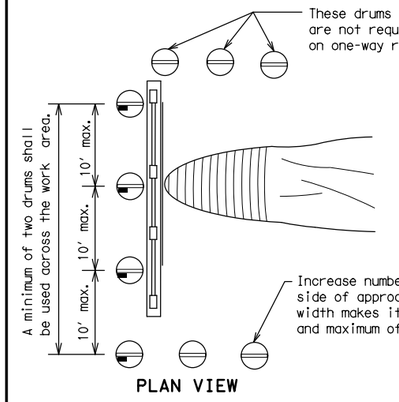

PLAN VIEW

LEGEND	
	Plastic drum
	Plastic drum with steady burn light or yellow warning reflector
SB	Steady burn warning light or yellow warning reflector

CULVERT WIDENING OR OTHER ISOLATED WORK WITHIN THE PROJECT LIMITS

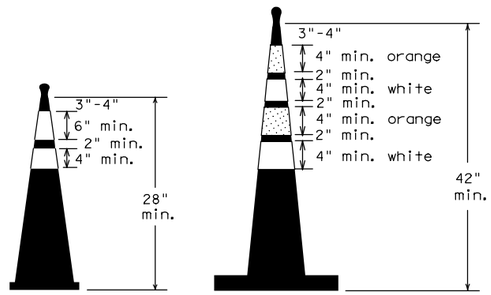

Two-Piece cones

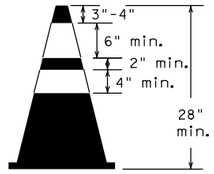

One-Piece cones

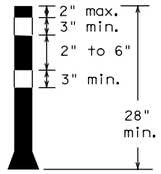

Tubular Marker

28" Cones shall have a minimum weight of 9 1/2 lbs.

42" 2-piece cones shall have a minimum weight of 30 lbs. including base.

1. Traffic cones and tubular markers shall be predominantly orange, and meet the height and weight requirements shown above.
2. One-piece cones have the body and base of the cone molded in one consolidated unit. Two-piece cones have a cone shaped body and a separate rubber base, or ballast, that is added to keep the device upright and in place.
3. Two-piece cones may have a handle or loop extending up to 8" above the minimum height shown, in order to aid in retrieving the device.
4. Cones or tubular markers shall have white or white and orange reflective bands as shown above. The reflective bands shall have a smooth, sealed outer surface and meet the requirements of Departmental Material Specification DMS-8300 Type A or Type B.
5. 28" cones and tubular markers are generally suitable for short duration and short-term stationary work as defined on BC(4). These should not be used for intermediate-term or long-term stationary work unless personnel is on-site to maintain them in their proper upright position.
6. 42" two-piece cones, vertical panels or drums are suitable for all work zone durations.
7. Cones or tubular markers used on each project should be of the same size and shape.

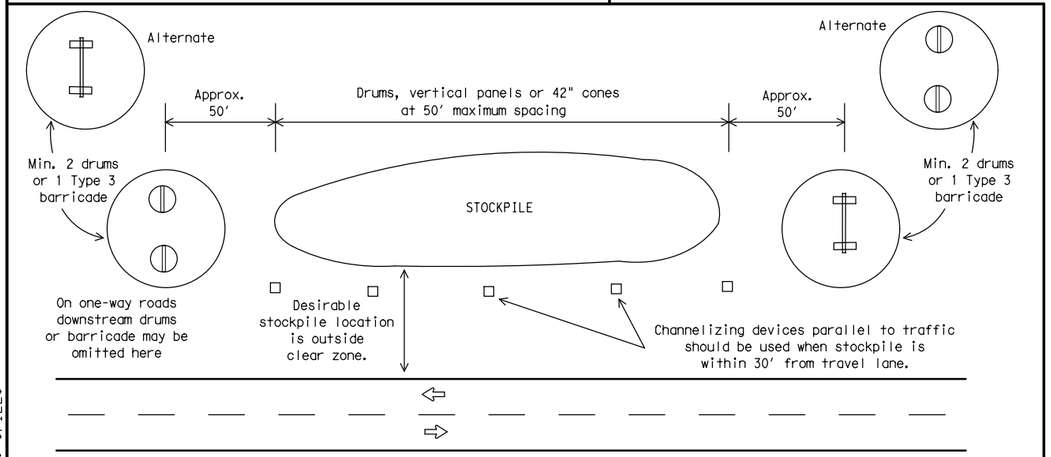

TRAFFIC CONTROL FOR MATERIAL STOCKPILES

SHEET 10 OF 12

Texas Department of Transportation

Traffic Safety Division Standard

BARRICADE AND CONSTRUCTION CHANNELIZING DEVICES

BC(10)-21

FILE: bc-21.dgn	DN: TxDOT	CK: TxDOT	DW: TxDOT	CK: TxDOT
© TxDOT November 2002	CONT	SECT	JOB	HIGHWAY
REVISIONS	0912	73	215	FM 270, ETC
9-07 8-14	DIST	COUNTY		SHEET NO.
7-13 5-21	HOU	GALVESTON		62

104

DATE: 8/1/2023 11:31:58 PM
FILE: $FILE$

DISCLAIMER:
The use of this standard is governed by the "Texas Engineering Practice Act". No warranty of any kind is made by TxDOT for any purpose whatsoever. TxDOT assumes no responsibility for the conversion of this standard to other formats or for incorrect results or damages resulting from its use.

WORK ZONE PAVEMENT MARKINGS

GENERAL

1. The Contractor shall be responsible for maintaining work zone and existing pavement markings, in accordance with the standard specifications and special provisions, on all roadways open to traffic within the CSJ limits unless otherwise stated in the plans.
2. Color, patterns and dimensions shall be in conformance with the "Texas Manual on Uniform Traffic Control Devices" (TMUTCD).
3. Additional supplemental pavement marking details may be found in the plans or specifications.
4. Pavement markings shall be installed in accordance with the TMUTCD and as shown on the plans.
5. When short term markings are required on the plans, short term markings shall conform with the TMUTCD, the plans and details as shown on the Standard Plan Sheet WZ(STPM).
6. When standard pavement markings are not in place and the roadway is opened to traffic, DO NOT PASS signs shall be erected to mark the beginning of the sections where passing is prohibited and PASS WITH CARE signs at the beginning of sections where passing is permitted.
7. All work zone pavement markings shall be installed in accordance with Item 662, "Work Zone Pavement Markings."

RAISED PAVEMENT MARKERS

1. Raised pavement markers are to be placed according to the patterns on BC(12).
2. All raised pavement markers used for work zone markings shall meet the requirements of Item 672, "RAISED PAVEMENT MARKERS" and Departmental Material Specification DMS-4200 or DMS-4300.

PREFABRICATED PAVEMENT MARKINGS

1. Removable prefabricated pavement markings shall meet the requirements of DMS-8241.
2. Non-removable prefabricated pavement markings (foil back) shall meet the requirements of DMS-8240.

MAINTAINING WORK ZONE PAVEMENT MARKINGS

1. The Contractor will be responsible for maintaining work zone pavement markings within the work limits.
2. Work zone pavement markings shall be inspected in accordance with the frequency and reporting requirements of work zone traffic control device inspections as required by Form 599.
3. The markings should provide a visible reference for a minimum distance of 300 feet during normal daylight hours and 160 feet when illuminated by automobile low-beam headlights at night, unless sight distance is restricted by roadway geometrics.
4. Markings failing to meet this criteria within the first 30 days after placement shall be replaced at the expense of the Contractor as per Specification Item 662.

REMOVAL OF PAVEMENT MARKINGS

1. Pavement markings that are no longer applicable, could create confusion or direct a motorist toward or into the closed portion of the roadway shall be removed or obliterated before the roadway is opened to traffic.
2. The above shall not apply to detours in place for less than three days, where flaggers and/or sufficient channelizing devices are used in lieu of markings to outline the detour route.
3. Pavement markings shall be removed to the fullest extent possible, so as not to leave a discernable marking. This shall be by any method approved by TxDOT Specification Item 677 for "Eliminating Existing Pavement Markings and Markers".
4. The removal of pavement markings may require resurfacing or seal coating portions of the roadway as described in Item 677.
5. Subject to the approval of the Engineer, any method that proves to be successful on a particular type pavement may be used.
6. Blast cleaning may be used but will not be required unless specifically shown in the plans.
7. Over-painting of the markings SHALL NOT BE permitted.
8. Removal of raised pavement markers shall be as directed by the Engineer.
9. Removal of existing pavement markings and markers will be paid for directly in accordance with Item 677, "ELIMINATING EXISTING PAVEMENT MARKINGS AND MARKERS," unless otherwise stated in the plans.
10. Black-out marking tape may be used to cover conflicting existing markings for periods less than two weeks when approved by the Engineer.

Temporary Flexible-Reflective Roadway Marker Tabs

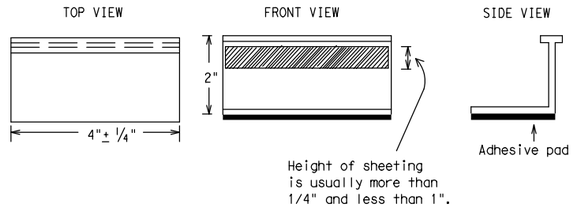

STAPLES OR NAILS SHALL NOT BE USED TO SECURE TEMPORARY FLEXIBLE-REFLECTIVE ROADWAY MARKER TABS TO THE PAVEMENT SURFACE

1. Temporary flexible-reflective roadway marker tabs used as guidemarks shall meet the requirements of DMS-8242.
2. Tabs detailed on this sheet are to be inspected and accepted by the Engineer or designated representative. Sampling and testing is not normally required, however at the option of the Engineer, either "A" or "B" below may be imposed to assure quality before placement on the roadway.
   A. Select five (5) or more tabs at random from each lot or shipment and submit to the Construction Division, Materials and Pavement Section to determine specification compliance.
   B. Select five (5) tabs and perform the following test. Affix five (5) tabs at 24 inch intervals on an asphaltic pavement in a straight line. Using a medium size passenger vehicle or pickup, run over the markers with the front and rear tires at a speed of 35 to 40 miles per hour, four (4) times in each direction. No more than one (1) out of the five (5) reflective surfaces shall be lost or displaced as a result of this test.
3. Small design variances may be noted between tab manufacturers.
4. See Standard Sheet WZ(STPM) for tab placement on new pavements. See Standard Sheet TCP(7-1) for tab placement on seal coat work.

RAISED PAVEMENT MARKERS USED AS GUIDEMARKS

1. Raised pavement markers used as guidemarks shall be from the approved product list, and meet the requirements of DMS-4200.
2. All temporary construction raised pavement markers provided on a project shall be of the same manufacturer.
3. Adhesive for guidemarks shall be bituminous material hot applied or butyl rubber pad for all surfaces, or thermoplastic for concrete surfaces.

Guidemarks shall be designated as:
YELLOW - (two amber reflective surfaces with yellow body).
WHITE - (one silver reflective surface with white body).

DEPARTMENTAL MATERIAL SPECIFICATIONS	
PAVEMENT MARKERS (REFLECTORIZED)	DMS-4200
TRAFFIC BUTTONS	DMS-4300
EPOXY AND ADHESIVES	DMS-6100
BITUMINOUS ADHESIVE FOR PAVEMENT MARKERS	DMS-6130
PERMANENT PREFABRICATED PAVEMENT MARKINGS	DMS-8240
TEMPORARY REMOVABLE, PREFABRICATED PAVEMENT MARKINGS	DMS-8241
TEMPORARY FLEXIBLE, REFLECTIVE ROADWAY MARKER TABS	DMS-8242

A list of prequalified reflective raised pavement markers, non-reflective traffic buttons, roadway marker tabs and other pavement markings can be found at the Material Producer List web address shown on BC(1).

Texas Department of Transportation

Traffic Safety Division Standard

BARRICADE AND CONSTRUCTION PAVEMENT MARKINGS

BC(11)-21

FILE: bc-21.dgn	DN: TxDOT	CK: TxDOT	DW: TxDOT	CK: TxDOT
© TxDOT February 1998	CONT	SECT	JOB	HIGHWAY
REVISIONS 2-98 9-07 5-21 1-02 7-13 11-02 8-14	0912	73	215	FM 270, ETC
	DIST	COUNTY		SHEET NO.
	HOU	GALVESTON		63

DATE: 8/1/2023 11:31:58 PM
FILE: $FILE$

DISCLAIMER:
The use of this standard is governed by the "Texas Engineering Practice Act". No warranty of any kind is made by TxDOT for any purpose whatsoever. TxDOT assumes no responsibility for the conversion of this standard to other formats or for incorrect results or damages resulting from its use.

PAVEMENT MARKING PATTERNS

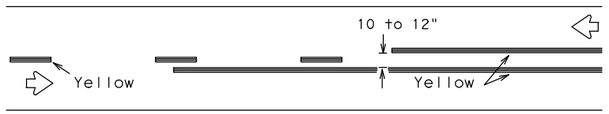

REFLECTORIZED PAVEMENT MARKINGS - PATTERN A

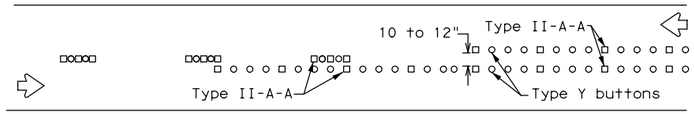

RAISED PAVEMENT MARKERS - PATTERN A

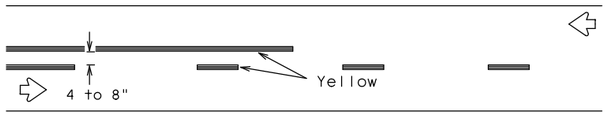

REFLECTORIZED PAVEMENT MARKINGS - PATTERN B

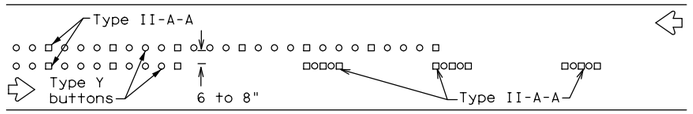

RAISED PAVEMENT MARKERS - PATTERN B

Pattern A is the TXDOT Standard, however Pattern B may be used if approved by the Engineer.
Prefabricated markings may be substituted for reflectorized pavement markings.

CENTER LINE & NO-PASSING ZONE BARRIER LINES FOR TWO-LANE, TWO-WAY HIGHWAYS

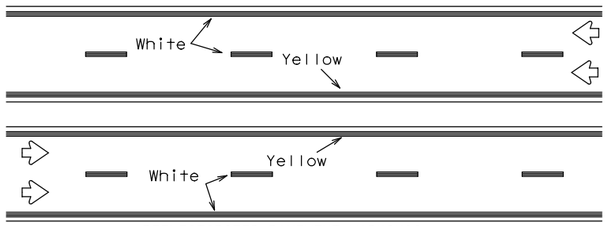

REFLECTORIZED PAVEMENT MARKINGS

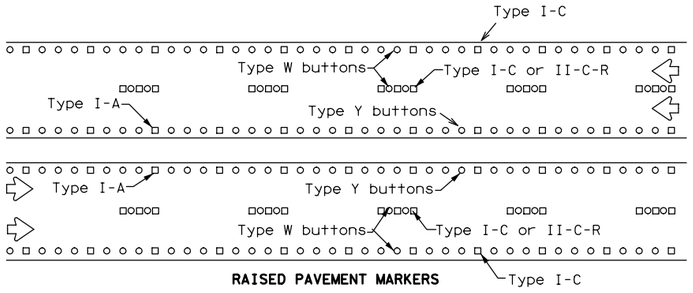

RAISED PAVEMENT MARKERS

Prefabricated markings may be substituted for reflectorized pavement markings.

EDGE & LANE LINES FOR DIVIDED HIGHWAY

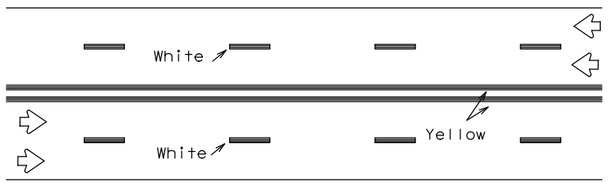

REFLECTORIZED PAVEMENT MARKINGS

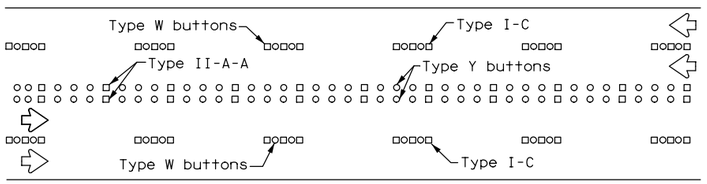

RAISED PAVEMENT MARKERS

Prefabricated markings may be substituted for reflectorized pavement markings.

LANE & CENTER LINES FOR MULTILANE UNDIVIDED HIGHWAYS

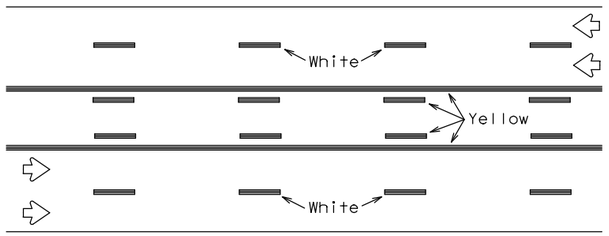

REFLECTORIZED PAVEMENT MARKINGS

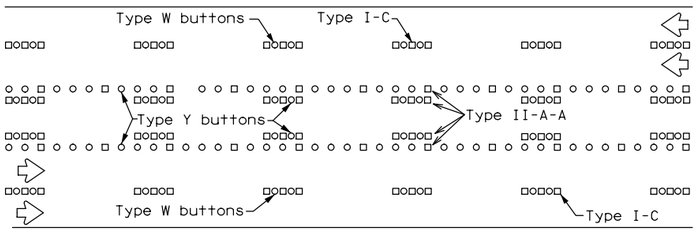

RAISED PAVEMENT MARKERS

Prefabricated markings may be substituted for reflectorized pavement markings.

TWO-WAY LEFT TURN LANE

STANDARD WORK ZONE PAVEMENT MARKINGS DETAILS

SOLID LINES

DOUBLE NO-PASSING LINE

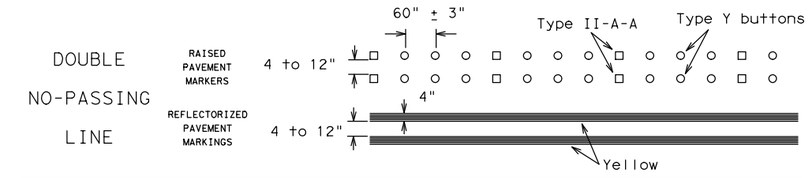

EDGE LINE OR SINGLE NO-PASSING LINE

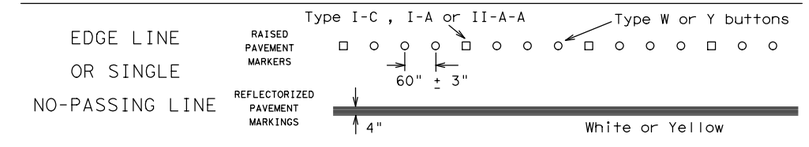

WIDE LINE

(FOR LEFT TURN CHANNELIZING LINE OR CHANNELIZING LINE USED TO DISCOURAGE LANE CHANGING.)

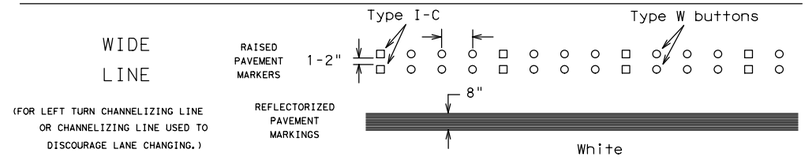

BROKEN LINES

CENTER LINE OR LANE LINE

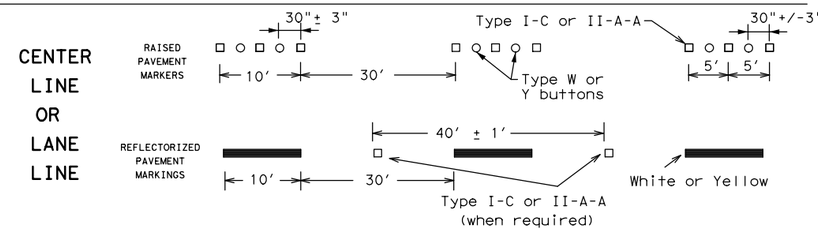

AUXILIARY OR LANEDROP LINE

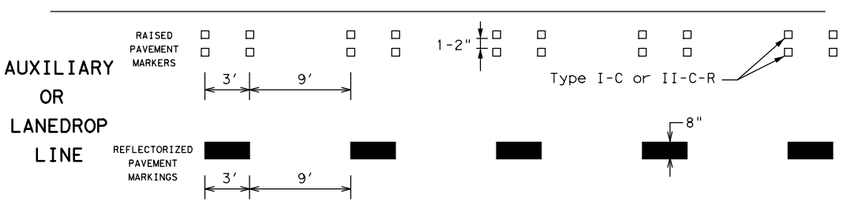

REMOVABLE MARKINGS WITH RAISED PAVEMENT MARKERS

If raised pavement markers are used to supplement REMOVABLE markings, the markers shall be applied to the top of the tape at the approximate mid length of tape used for broken lines or at 20 foot spacing for solid lines. This allows an easier removal of raised pavement markers and tape.

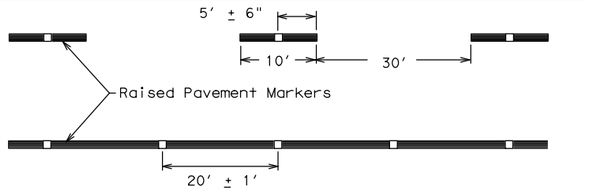

Centerline only - not to be used on edge lines

Raised pavement markers used as standard pavement markings shall be from the approved products list and meet the requirements of Item 672 "RAISED PAVEMENT MARKERS."

Texas Department of Transportation

Traffic Safety Division Standard

BARRICADE AND CONSTRUCTION PAVEMENT MARKING PATTERNS

BC(12)-21

FILE: bc-21.dgn	DN: TxDOT	CK: TxDOT	DW: TxDOT	CK: TxDOT
© TxDOT February 1998	CONT	SECT	JOB	HIGHWAY
REVISIONS 1-97 9-07 5-21 2-98 7-13 11-02 8-14	0912	73	215	FM 270, ETC
	DIST	COUNTY		SHEET NO.
	HOU	GALVESTON		64

106

DATE: 8/1/2023 11:31:59 PM
FILE: $FILE$

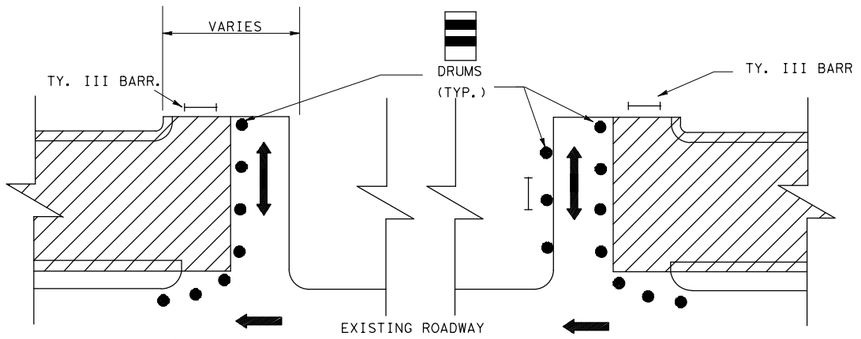

1) WITH TRAFFIC ON EXISTING
BUILD ONE-HALF OF DRIVE.

2) BUILD OTHER HALF OF DRIVE

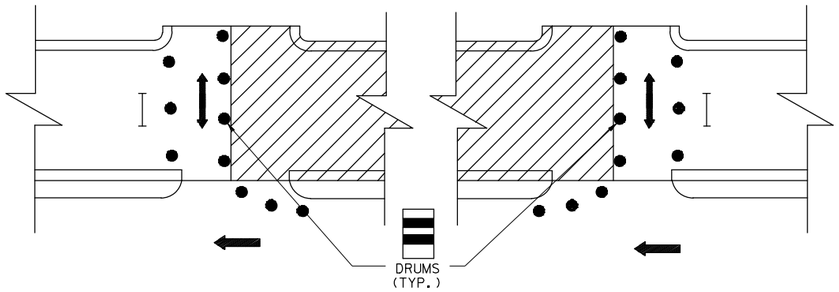

2) BUILD OTHER HALF OF DRIVE

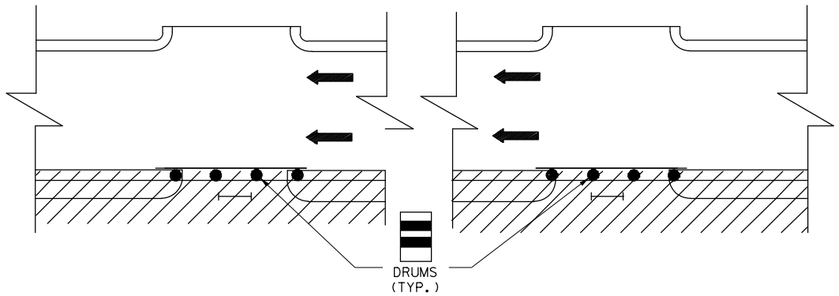

3) OPEN DRIVE

4) AFTER TRAFFIC MOVES TO NEW ROADWAY,
BUILD REMAINING CURB.

SINGLE ACCESS DRIVES

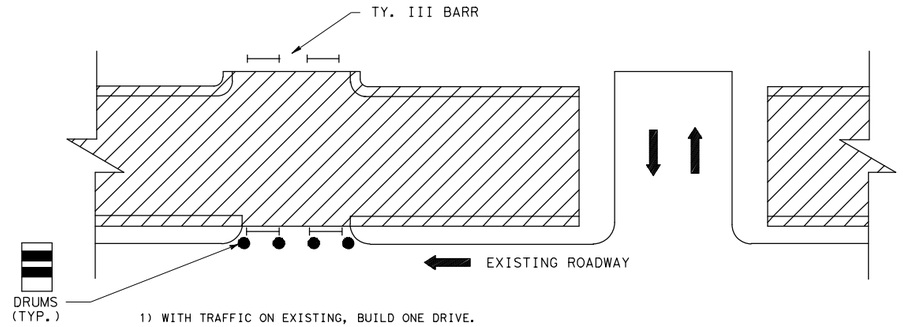

1) WITH TRAFFIC ON EXISTING, BUILD ONE DRIVE.

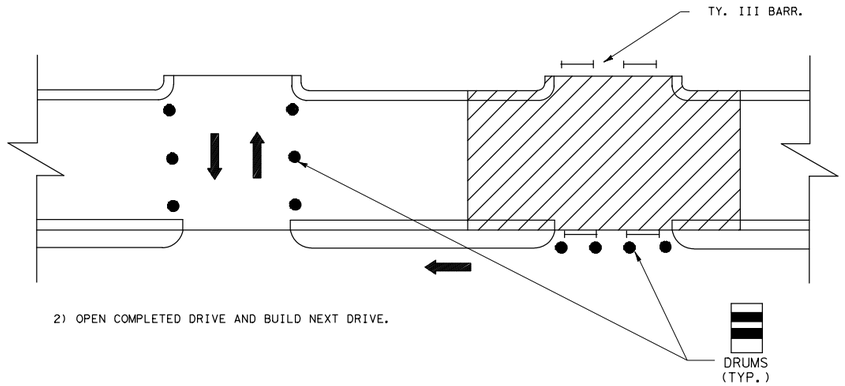

2) OPEN COMPLETED DRIVE AND BUILD NEXT DRIVE.

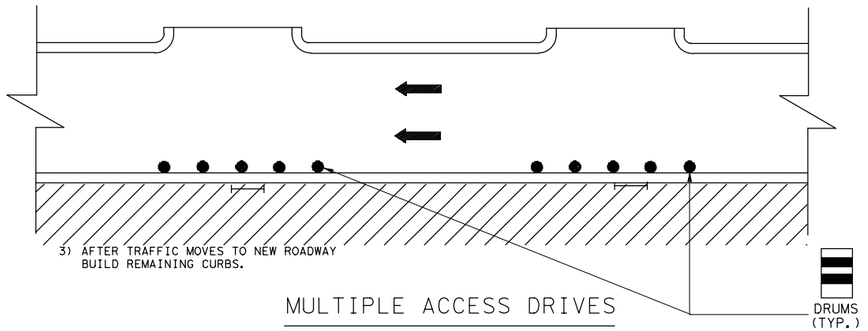

3) AFTER TRAFFIC MOVES TO NEW ROADWAY
BUILD REMAINING CURBS.

MULTIPLE ACCESS DRIVES

Texas Department of Transportation
Houston District

CONSTRUCTION SEQUENCE FOR MISCELLANEOUS DRIVES

CSMD TC8010-2020

FILE:	DN:	CK:	DW:	CK:	
© TxDOT 2020	DIST	FED REG	PROJECT NO.		SHEET
REVISIONS	HOU	6			65
	COUNTY		CONTROL	SECT	JOB	HIGHWAY
	GALVESTON		0912	73	215	FM 270 ETC

DISCLAIMER:
The use of this standard is governed by the "Texas Engineering Practice Act". No warranty of any kind is made by TxDOT for any purpose whatsoever. TxDOT assumes no responsibility for the conversion of this standard to other formats or for incorrect results or damages resulting from its use.

DATE: 8/1/2023 11:32:03 PM
FILE: $FILE$

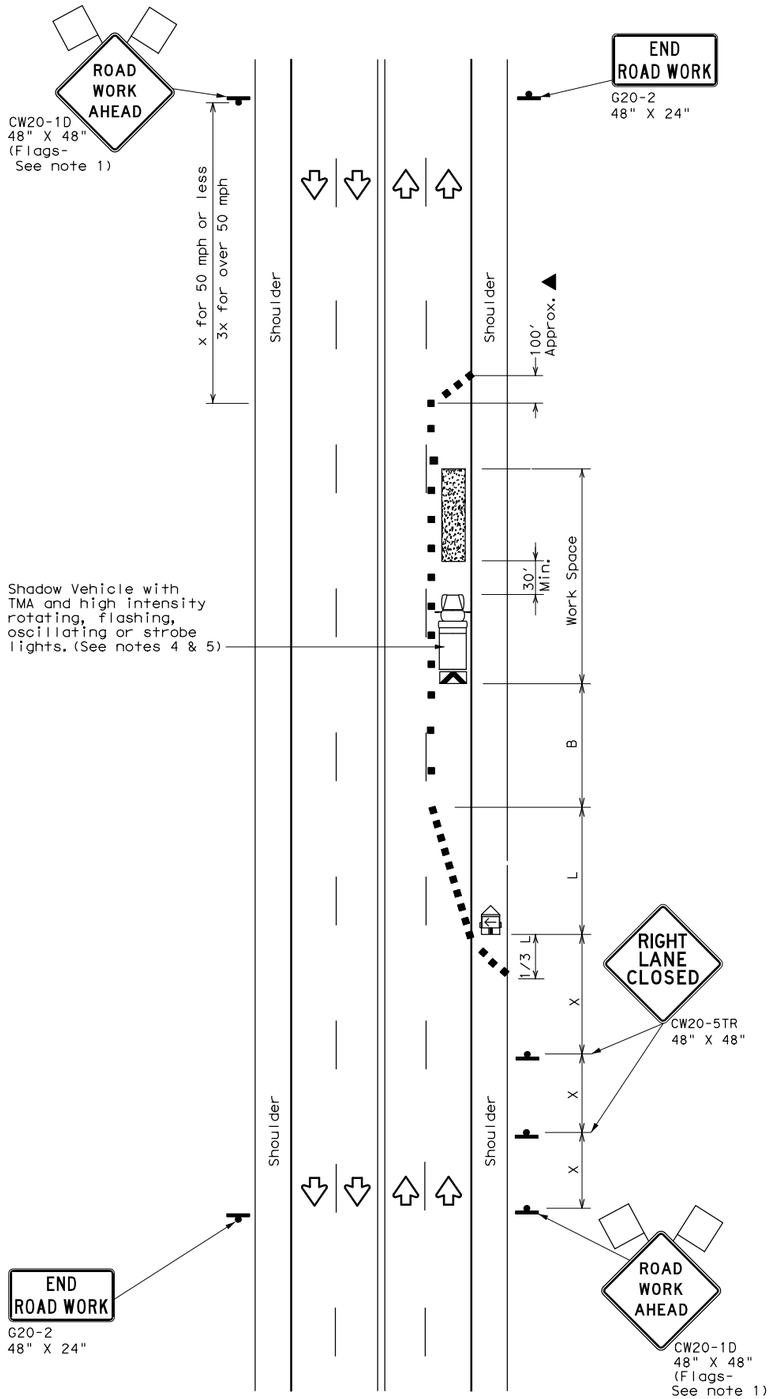

TCP (1-4a)

ONE LANE CLOSED

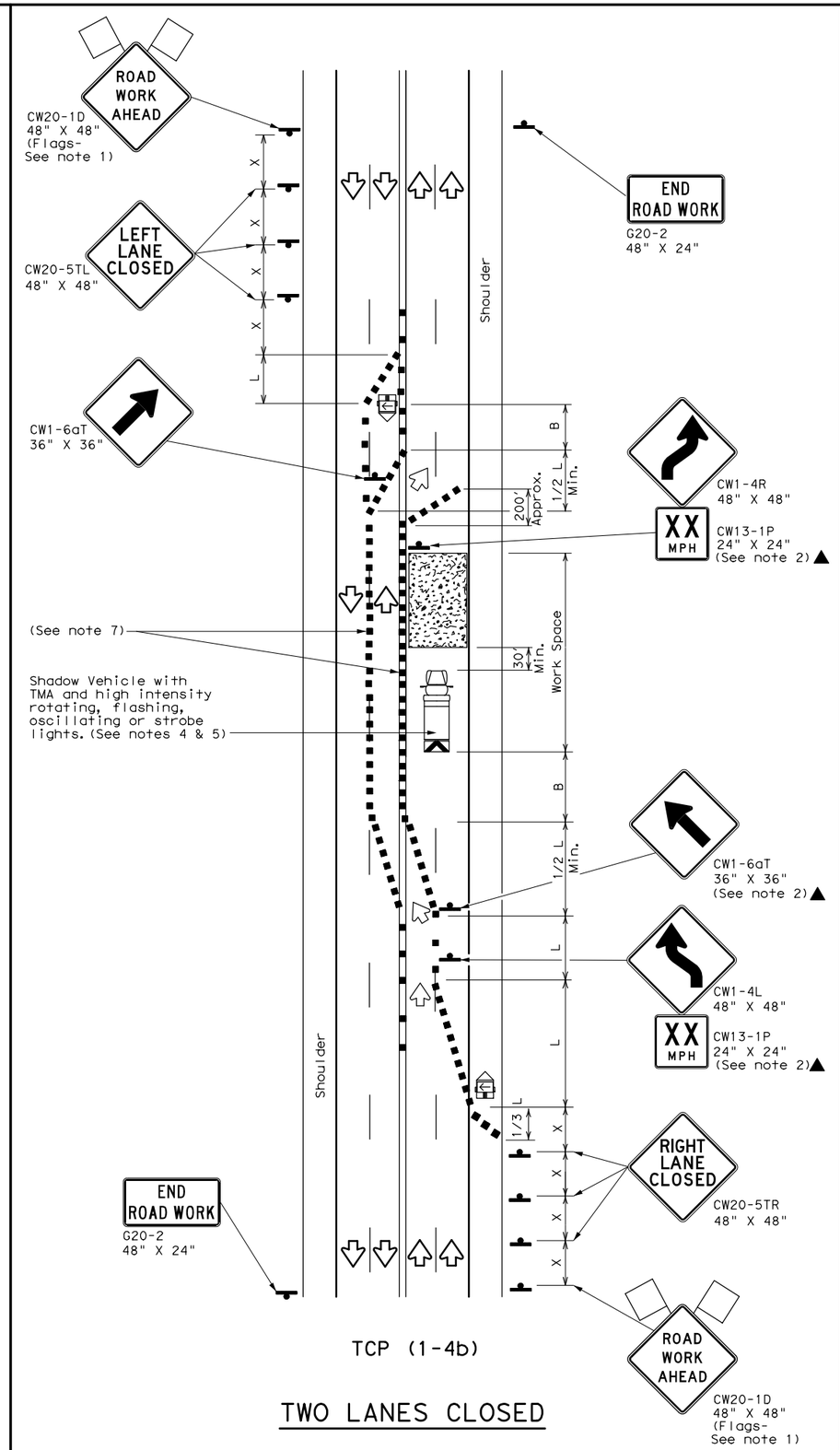

TCP (1-4b)

TWO LANES CLOSED

LEGEND			
	Type 3 Barricade		Channelizing Devices
	Heavy Work Vehicle		Truck Mounted Attenuator (TMA)
	Trailer Mounted Flashing Arrow Board	M	Portable Changeable Message Sign (PCMS)
	Sign		Traffic Flow
	Flag		Flagger

Posted Speed *	Formula	Minimum Desirable Taper Lengths ** 10' Offset	11' Offset	12' Offset	Suggested Maximum Spacing of Channelizing Devices: On a Taper	On a Tangent	Minimum Sign Spacing "X" Distance	Suggested Longitudinal Buffer Space "B"
30	$L=\frac{WS^2}{60}$	150'	165'	180'	30'	60'	120'	90'
35		205'	225'	245'	35'	70'	160'	120'
40		265'	295'	320'	40'	80'	240'	155'
45	L=WS	450'	495'	540'	45'	90'	320'	195'
50		500'	550'	600'	50'	100'	400'	240'
55		550'	605'	660'	55'	110'	500'	295'
60		600'	660'	720'	60'	120'	600'	350'
65		650'	715'	780'	65'	130'	700'	410'
70		700'	770'	840'	70'	140'	800'	475'
75		750'	825'	900'	75'	150'	900'	540'

* Conventional Roads Only
** Taper lengths have been rounded off.
L=Length of Taper(FT) W=Width of Offset(FT) S=Posted Speed(MPH)

TYPICAL USAGE				
MOBILE	SHORT DURATION	SHORT TERM STATIONARY	INTERMEDIATE TERM STATIONARY	LONG TERM STATIONARY
	✓	✓		

GENERAL NOTES

1. Flags attached to signs where shown are REQUIRED.
2. All traffic control devices illustrated are REQUIRED, except those denoted with the triangle symbol may be omitted when stated elsewhere in the plans, or for routine maintenance work, when approved by the Engineer.
3. The CW20-1D "ROAD WORK AHEAD" sign may be repeated if the visibility of the work zone is less than 1500 feet.
4. A Shadow Vehicle with a TMA should be used anytime it can be positioned 30 to 100 feet in advance of the area of crew exposure without adversely affecting the performance or quality of the work. If workers are no longer present but road or work conditions require the traffic control to remain in place, Type 3 Barricades or other channelizing devices may be substituted for the Shadow Vehicle and TMA.
5. Additional Shadow Vehicles with TMAs may be positioned off the paved surface, next to those shown in order to protect wider work spaces.

TCP (1-4a)

6. If this TCP is used for a left lane closure , CW20-5TL "LEFT LANE CLOSED" signs shall be used and channelizing devices shall be placed on the centerline where needed to protect the work space from opposing traffic with the arrow panel placed in the closed lane near the end of the merging taper.

TCP (1-4b)

7. Where traffic is directed over a yellow centerline, channelizing devices which separate two-way traffic should be spaced on tapers at 20' or 15' if posted speeds are 35 mph or slower, and for tangent sections, at 1/2S where S is the speed in mph. This tighter device spacing is intended for the areas of conflicting markings, not the entire work zone.

Texas Department of Transportation — Traffic Operations Division Standard

TRAFFIC CONTROL PLAN LANE CLOSURES ON MULTILANE CONVENTIONAL ROADS

TCP(1-4)-18

FILE: tcp1-4-18.dgn	DN:	CK:	DW:	CK:
© TxDOT December 1985	CONT	SECT	JOB	HIGHWAY
REVISIONS	0912	73	215	FM 270, ETC
2-94 4-98	DIST	COUNTY		SHEET NO.
8-95 2-12	HOU	GALVESTON		66
1-97 2-18				

DISCLAIMER:
The use of this standard is governed by the "Texas Engineering Practice Act". No warranty of any kind is made by TxDOT for any purpose whatsoever. TxDOT assumes no responsibility for the conversion of this standard to other formats or for incorrect results or damages resulting from its use.

DATE: 8/1/2023 11:32:04 PM
FILE: $FILE$

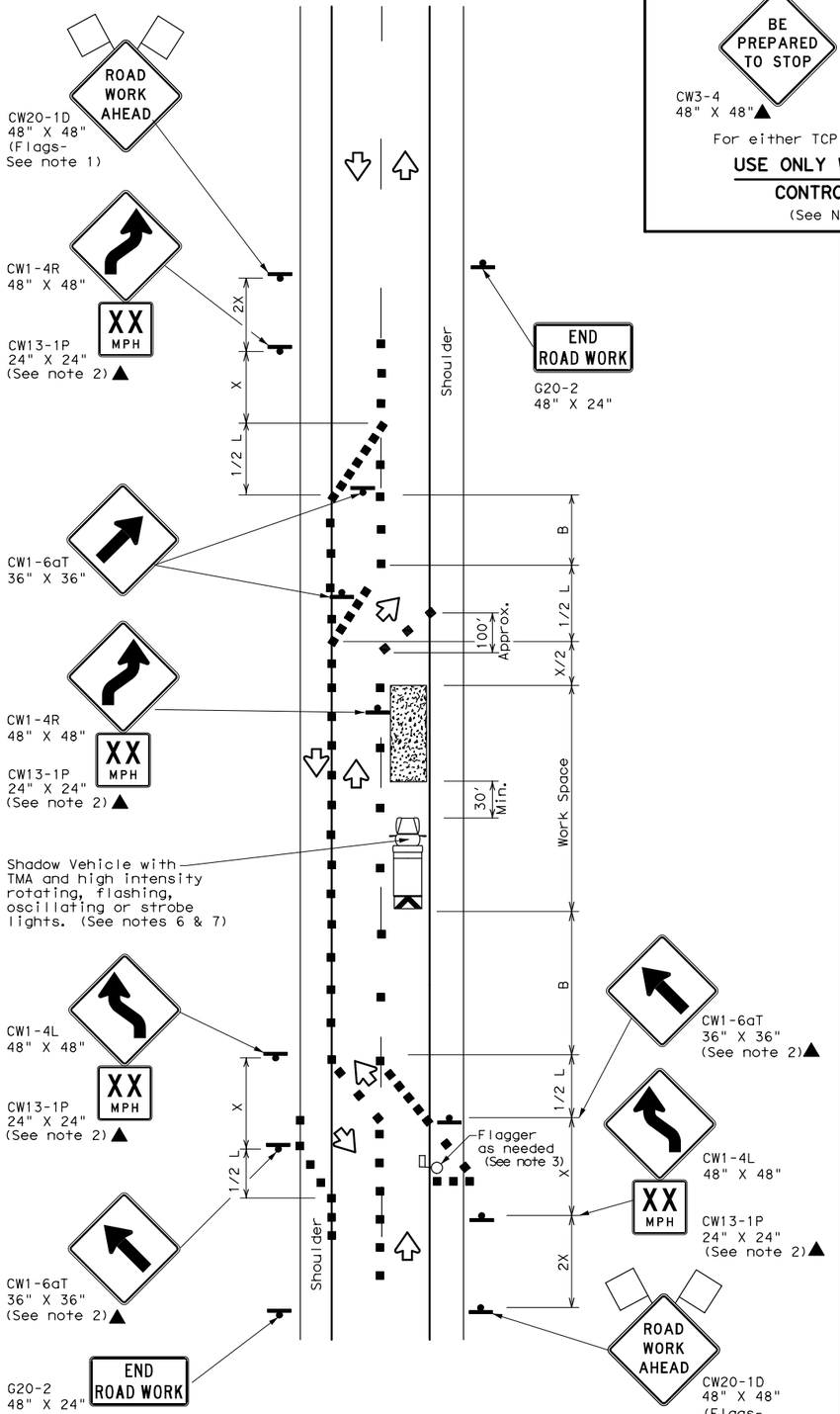

TCP (1-3a)
2-LANE ROADWAY WITH PAVED SHOULDERS

ONE LANE CLOSED
ADEQUATE FIELD OF VIEW

BE PREPARED TO STOP
CW3-4 48" X 48"
CW20-7 48" X 48"
For either TCP(1-3a) or TCP(1-3b)

USE ONLY WHEN FLAGGERS CONTROL TRAFFIC
(See Notes 2 & 3)

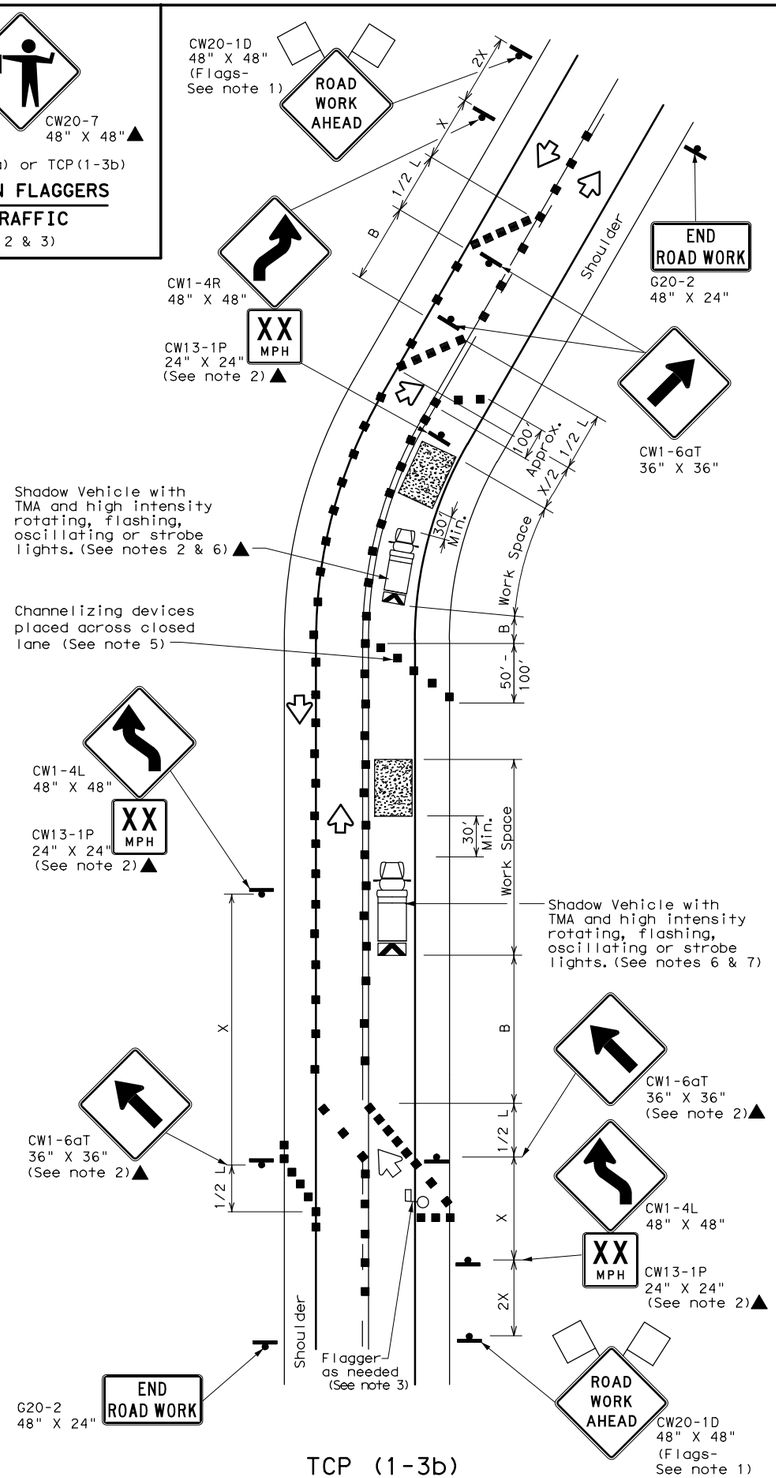

TCP (1-3b)
2-LANE ROADWAY WITH PAVED SHOULDERS

ONE LANE CLOSED
INADEQUATE FIELD OF VIEW

LEGEND			
	Type 3 Barricade		Channelizing Devices
	Heavy Work Vehicle		Truck Mounted Attenuator (TMA)
	Trailer Mounted Flashing Arrow Board	M	Portable Changeable Message Sign (PCMS)
	Sign		Traffic Flow
	Flag		Flagger

Posted Speed *	Formula	Minimum Desirable Taper Lengths ** 10' Offset	11' Offset	12' Offset	Suggested Maximum Spacing of Channelizing Devices: On a Taper	On a Tangent	Minimum Sign Spacing "X" Distance	Suggested Longitudinal Buffer Space "B"
30	$L=\frac{WS^2}{60}$	150'	165'	180'	30'	60'	120'	90'
35		205'	225'	245'	35'	70'	160'	120'
40		265'	295'	320'	40'	80'	240'	155'
45	L=WS	450'	495'	540'	45'	90'	320'	195'
50		500'	550'	600'	50'	100'	400'	240'
55		550'	605'	660'	55'	110'	500'	295'
60		600'	660'	720'	60'	120'	600'	350'
65		650'	715'	780'	65'	130'	700'	410'
70		700'	770'	840'	70'	140'	800'	475'
75		750'	825'	900'	75'	150'	900'	540'

* Conventional Roads Only
** Taper lengths have been rounded off.
L=Length of Taper(FT) W=Width of Offset(FT) S=Posted Speed(MPH)

TYPICAL USAGE				
MOBILE	SHORT DURATION	SHORT TERM STATIONARY	INTERMEDIATE TERM STATIONARY	LONG TERM STATIONARY
	✓	✓		

GENERAL NOTES

1. Flags attached to signs where shown are REQUIRED.
2. All traffic control devices illustrated are REQUIRED, except those denoted with the triangle symbol may be omitted when stated elsewhere in the plans, or for routine maintenance work, when approved by the Engineer.
3. Flagger control should NOT be used unless roadway conditions or heavy traffic volume require additional emphasis to safely control traffic. Additional flaggers may be positioned in advance of traffic queues to alert traffic to reduce speed.
4. DO NOT PASS, PASS WITH CARE and construction regulatory speed zone signs may be installed downstream of the ROAD WORK AHEAD signs.
5. When the work zone is made up of several work spaces, channelizing devices should be placed laterally across the closed lane to re-emphasize closure. Laterally placed channelizing devices should be repeated every 500 to 1000 feet in urban areas and every 1/4 to 1/2 mile in rural areas.
6. A Shadow Vehicle with a TMA should be used anytime it can be positioned 30 to 100 feet in advance of the area of crew exposure without adversely affecting the performance or quality of the work. If workers are no longer present but road or work conditions require the traffic control to remain in place, Type 3 Barricades or other channelizing devices may be substituted for the Shadow Vehicle and TMA.
7. Additional Shadow Vehicles with TMAs may be positioned off the paved surface, next to those shown in order to protect wider work spaces.
8. Where traffic is directed over a yellow centerline, channelizing devices which separate two-way traffic should be spaced on tapers at 20', or 15' if posted speed are 35 mph or slower, and for tangent sections, at 1/2S where S is the speed in mph. This tighter device spacing is intended for the area of conflicting markings not the entire work zone.

Texas Department of Transportation
Traffic Operations Division Standard

TRAFFIC CONTROL PLAN TRAFFIC SHIFTS ON TWO LANE ROADS

TCP(1-3)-18

FILE: tcp1-3-18.dgn	DN:	CK:	DW:	CK:
© TxDOT December 1985	CONT	SECT	JOB	HIGHWAY
REVISIONS 2-94 4-98 8-95 2-12 1-97 2-18	0912	73	215	FM 270, ETC
	DIST	COUNTY		SHEET NO.
	HOU	GALVESTON		67

153

DISCLAIMER:
The use of this standard is governed by the "Texas Engineering Practice Act". No warranty of any kind is made by TxDOT for any purpose whatsoever. TxDOT assumes no responsibility for the conversion of this standard to other formats or for incorrect results or damages resulting from its use.

DATE: 8/1/2023 11:32:06 PM
FILE: $FILE$

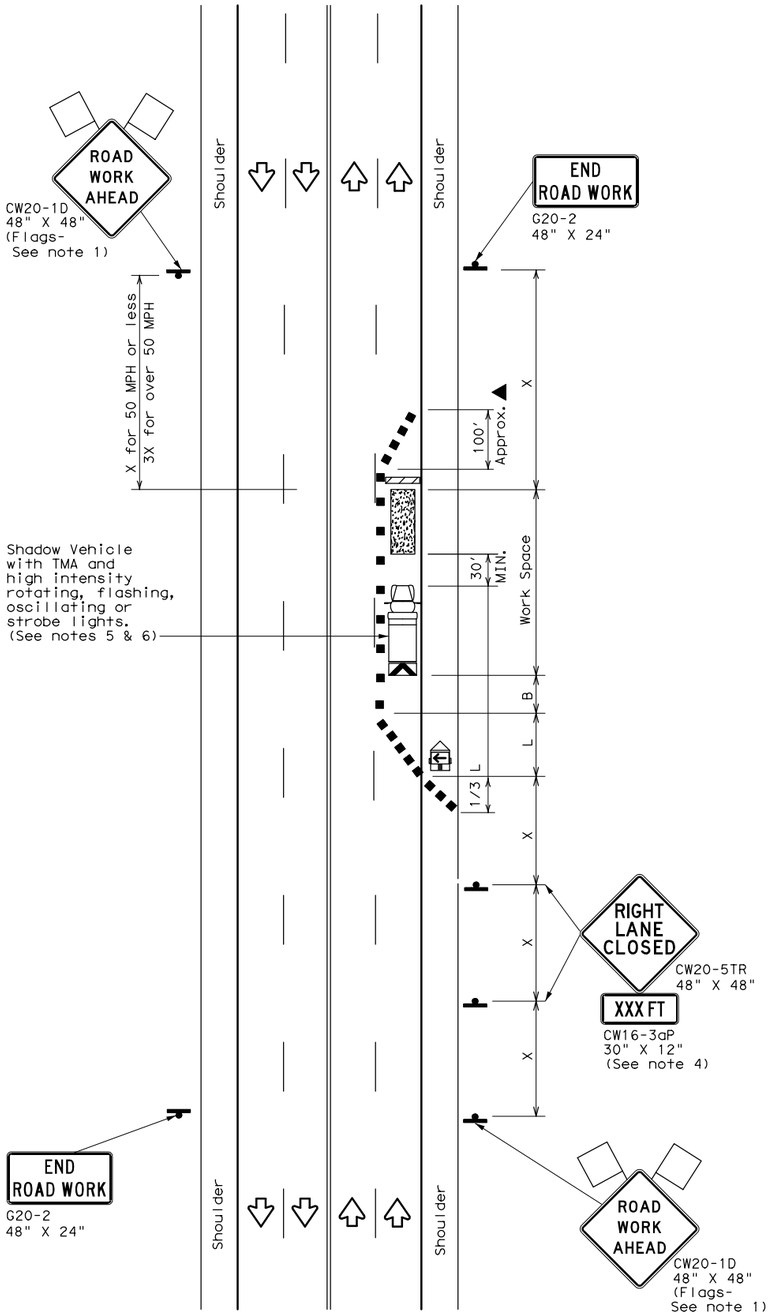

TCP (2-4a)

ONE LANE CLOSED

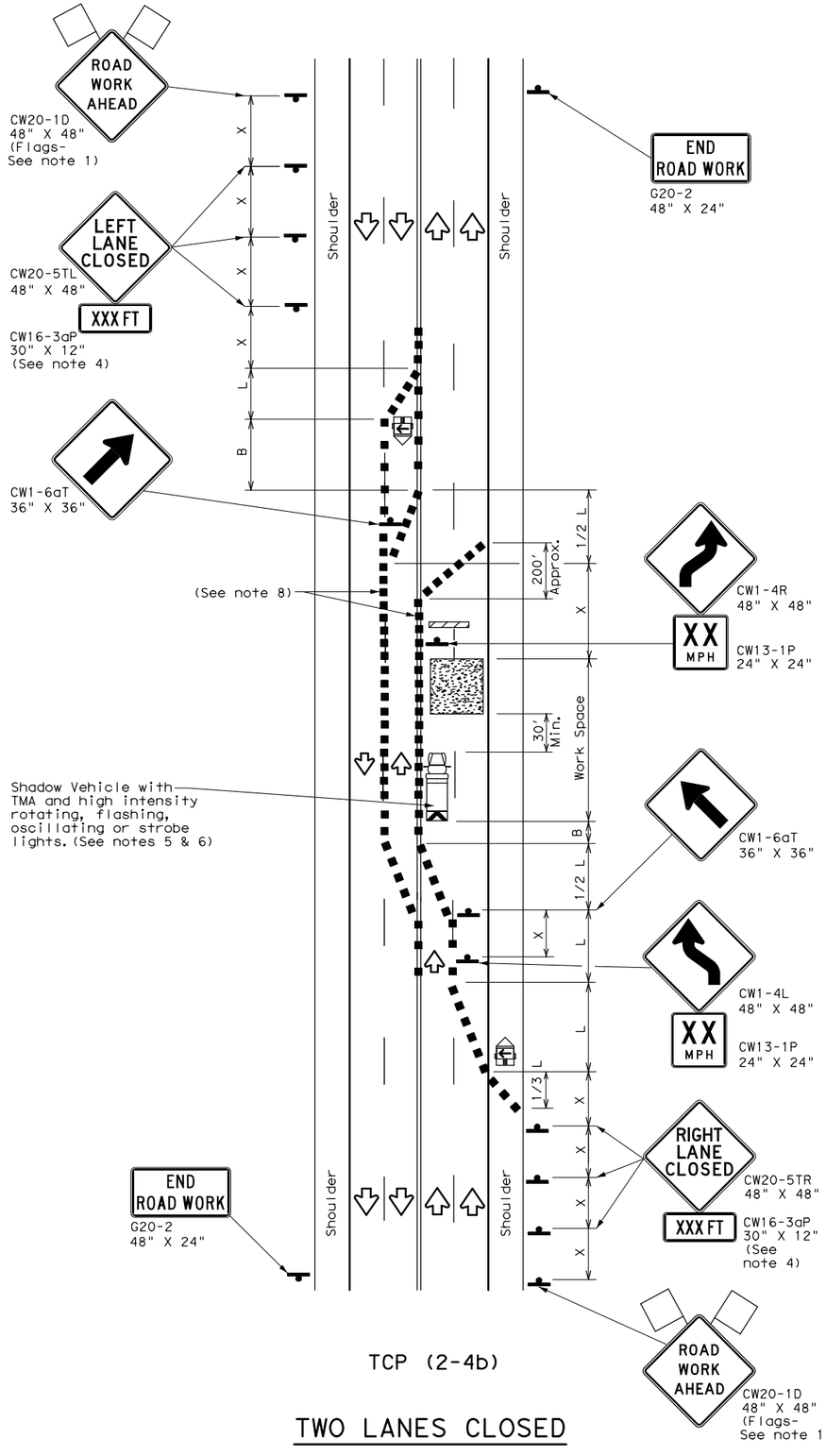

TCP (2-4b)

TWO LANES CLOSED

LEGEND			
	Type 3 Barricade		Channelizing Devices
	Heavy Work Vehicle		Truck Mounted Attenuator (TMA)
	Trailer Mounted Flashing Arrow Board	M	Portable Changeable Message Sign (PCMS)
	Sign		Traffic Flow
	Flag		Flagger

Posted Speed *	Formula	Minimum Desirable Taper Lengths ** 10' Offset	11' Offset	12' Offset	Suggested Maximum Spacing of Channelizing Devices: On a Taper	On a Tangent	Minimum Sign Spacing "X" Distance	Suggested Longitudinal Buffer Space "B"
30	$L=\frac{WS^2}{60}$	150'	165'	180'	30'	60'	120'	90'
35		205'	225'	245'	35'	70'	160'	120'
40		265'	295'	320'	40'	80'	240'	155'
45	L=WS	450'	495'	540'	45'	90'	320'	195'
50		500'	550'	600'	50'	100'	400'	240'
55		550'	605'	660'	55'	110'	500'	295'
60		600'	660'	720'	60'	120'	600'	350'
65		650'	715'	780'	65'	130'	700'	410'
70		700'	770'	840'	70'	140'	800'	475'
75		750'	825'	900'	75'	150'	900'	540'

* Conventional Roads Only

** Taper lengths have been rounded off.
L=Length of Taper(FT) W=Width of Offset(FT) S=Posted Speed(MPH)

TYPICAL USAGE				
MOBILE	SHORT DURATION	SHORT TERM STATIONARY	INTERMEDIATE TERM STATIONARY	LONG TERM STATIONARY
		✓	✓	

GENERAL NOTES

1. Flags attached to signs where shown, are REQUIRED.
2. All traffic control devices illustrated are REQUIRED, except those denoted with the triangle symbol may be omitted when stated elsewhere in the plans, or for routine maintenance work, when approved by the Engineer.
3. The downstream taper is optional. When used, it should be 100 feet minimum length per lane.
4. For short term applications, when post mounted signs are not used, the distance legend may be shown on the sign face rather than on a CW16-3aP supplemental plaque.
5. A Shadow Vehicle with a TMA should be used anytime it can be positioned 30 to 100 feet in advance of the area of crew exposure without adversely affecting the performance or quality of the work. If workers are no longer present but road or work conditions require the traffic control to remain in place, Type 3 Barricades or other channelizing devices may be substituted for the Shadow Vehicle and TMA.
6. Additional Shadow Vehicles with TMAs may be positioned in each closed lane, on the shoulder or off the paved surface, next to those shown in order to protect a wider work space.

TCP (2-4a)

7. If this TCP is used for a left lane closure, CW20-5TL "LEFT LANE CLOSED"signs shall be used and channelizing devices shall be placed on the centerline to protect the work space from opposing traffic with the arrow board placed in the closed lane near the end of the merging taper.

TCP (2-4b)

8. For shorter durations where traffic is directed over a yellow centerline, channelizing devices which separate two-way traffic should be spaced on tapers at 20' or 15' if posted speeds are 35 mph or slower, and for tangent sections, at 1/2(S) where S is the speed in mph. This tighter devices spacing is intended for the area of conflicting markings, not the entire work zone.

Texas Department of Transportation

Traffic Operations Division Standard

TRAFFIC CONTROL PLAN
LANE CLOSURES ON MULTILANE CONVENTIONAL ROADS

TCP(2-4)-18

FILE: tcp2-4-18.dgn	DN:	CK:	DW:	CK:
© TxDOT December 1985	CONT	SECT	JOB	HIGHWAY
REVISIONS 8-95 3-03	0912	73	215	FM 270, ETC
1-97 2-12	DIST	COUNTY		SHEET NO.
4-98 2-18	HOU	GALVESTON		68

DISCLAIMER:
The use of this standard is governed by the "Texas Engineering Practice Act". No warranty of any kind is made by TxDOT for any purpose whatsoever. TxDOT assumes no responsibility for the conversion of this standard to other formats or for incorrect results or damages resulting from its use.

DATE: 8/1/2023 11:32:08 PM
FILE: $FILE$

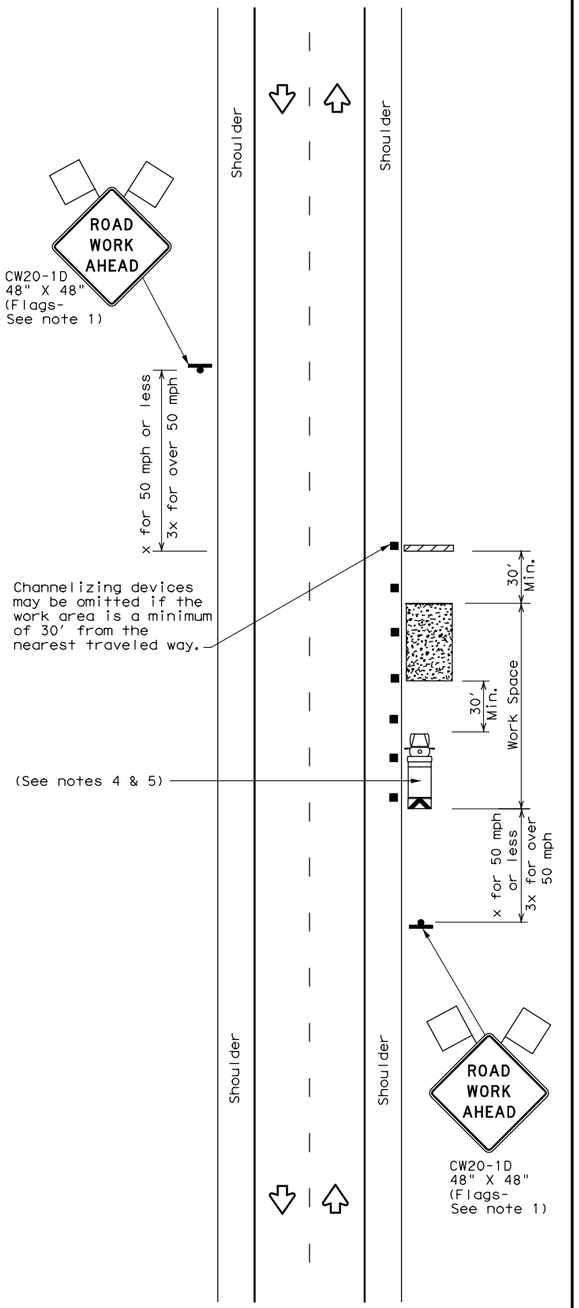

TCP (2-1a)

WORK SPACE NEAR SHOULDER
Conventional Roads

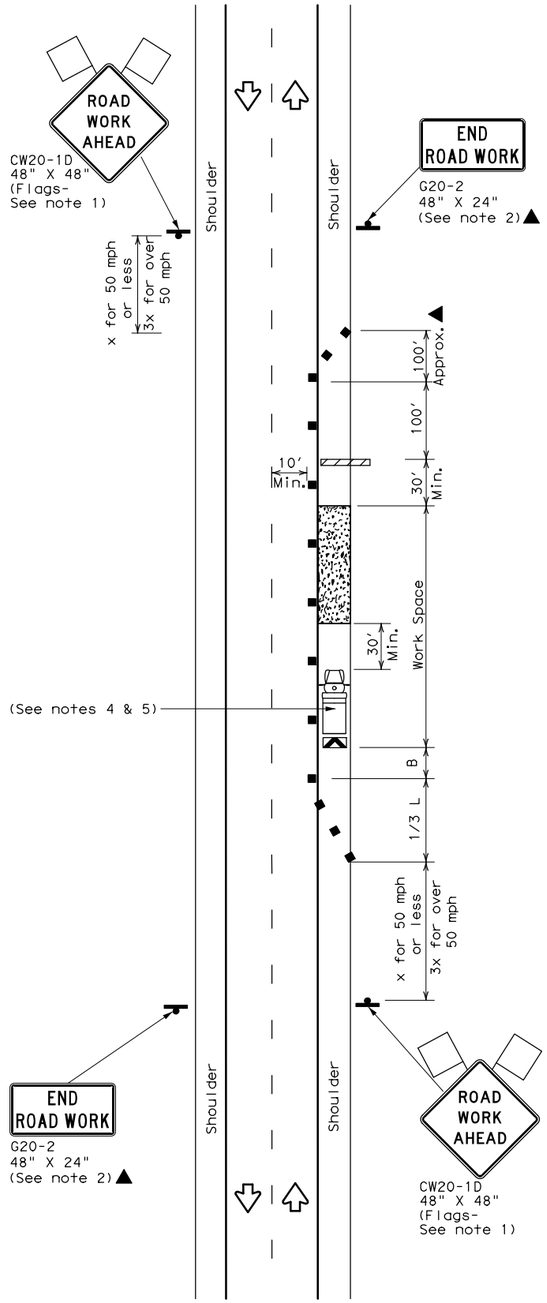

TCP (2-1b)

WORK SPACE ON SHOULDER
Conventional Roads

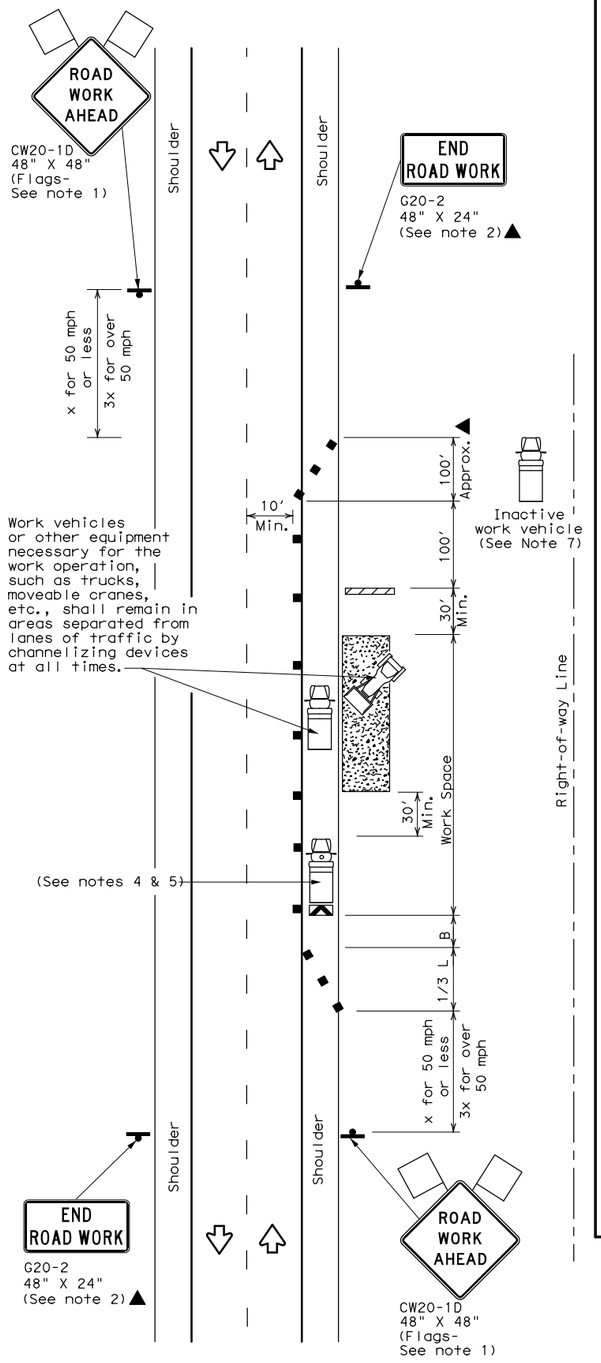

TCP (2-1c)

WORK VEHICLES ON SHOULDER
Conventional Roads

LEGEND			
	Type 3 Barricade		Channelizing Devices
	Heavy Work Vehicle		Truck Mounted Attenuator (TMA)
	Trailer Mounted Flashing Arrow Board	M	Portable Changeable Message Sign (PCMS)
	Sign		Traffic Flow
	Flag		Flagger

Posted Speed ✳	Formula	Minimum Desirable Taper Lengths ✳✳ 10' Offset	11' Offset	12' Offset	Suggested Maximum Spacing of Channelizing Devices: On a Taper	On a Tangent	Minimum Sign Spacing "X" Distance	Suggested Longitudinal Buffer Space "B"
30	$L=\frac{WS^2}{60}$	150'	165'	180'	30'	60'	120'	90'
35		205'	225'	245'	35'	70'	160'	120'
40		265'	295'	320'	40'	80'	240'	155'
45	L=WS	450'	495'	540'	45'	90'	320'	195'
50		500'	550'	600'	50'	100'	400'	240'
55		550'	605'	660'	55'	110'	500'	295'
60		600'	660'	720'	60'	120'	600'	350'
65		650'	715'	780'	65'	130'	700'	410'
70		700'	770'	840'	70'	140'	800'	475'
75		750'	825'	900'	75'	150'	900'	540'

✳ Conventional Roads Only

✳✳ Taper lengths have been rounded off.
L=Length of Taper(FT) W=Width of Offset(FT) S=Posted Speed(MPH)

TYPICAL USAGE				
MOBILE	SHORT DURATION	SHORT TERM STATIONARY	INTERMEDIATE TERM STATIONARY	LONG TERM STATIONARY
	✓	✓	✓	✓

GENERAL NOTES

1. Flags attached to signs where shown, are REQUIRED.
2. All traffic control devices illustrated are REQUIRED, except those denoted with the triangle symbol may be omitted when stated in the plans, or for routine maintenance work, when approved by the Engineer.
3. Stockpiled material should be placed a minimum of 30 feet from nearest traveled way.
4. Shadow Vehicle with TMA and high intensity rotating, flashing, oscillating or strobe lights. A Shadow Vehicle with a TMA should be used anytime it can be positioned 30 to 100 feet in advance of the area of crew exposure without adversely affecting the performance or quality of the work. If workers are no longer present but road or work conditions require the traffic control to remain in place, Type 3 Barricades or other channelizing devices may be substituted for the Shadow Vehicle and TMA.
5. Additional Shadow Vehicles with TMAs may be positioned off the paved surface, next to those shown in order to protect a wider work space.
6. See TCP(5-1) for shoulder work on divided highways, expressways and freeways.
7. Inactive work vehicles or other equipment should be parked near the right-of-way line and not parked on the paved shoulder.
8. CW21-5 "SHOULDER WORK" signs may be used in place of CW20-1D "ROAD WORK AHEAD" signs for shoulder work on conventional roadways.

Texas Department of Transportation

Traffic Operations Division Standard

TRAFFIC CONTROL PLAN CONVENTIONAL ROAD SHOULDER WORK

TCP(2-1)-18

FILE: tcp2-1-18.dgn	DN:	CK:	DW:	CK:
© TxDOT December 1985	CONT	SECT	JOB	HIGHWAY
REVISIONS	0912	73	215	FM 270, ETC
2-94 4-98	DIST	COUNTY		SHEET NO.
8-95 2-12	HOU	GALVESTON		69
1-97 2-18				

161

DISCLAIMER:
The use of this standard is governed by the "Texas Engineering Practice Act". No warranty of any kind is made by TxDOT for any purpose whatsoever. TxDOT assumes no responsibility for the conversion of this standard to other formats or for incorrect results or damages resulting from its use.

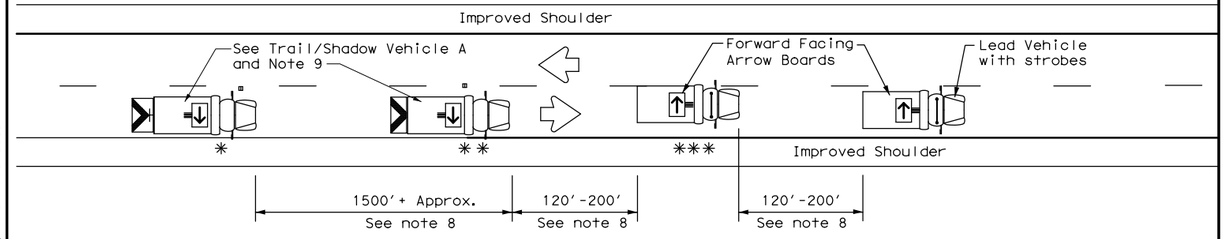

TCP (3-3a)

TWO LANE HIGHWAY WITH PAVED SHOULDERS (WORK ON TRAVEL LANE)

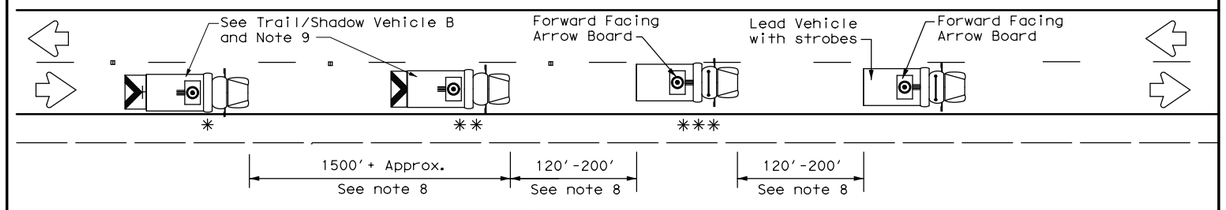

TCP (3-3b)

TWO LANE HIGHWAY WITHOUT PAVED SHOULDERS (WORK ON TRAVEL LANE)

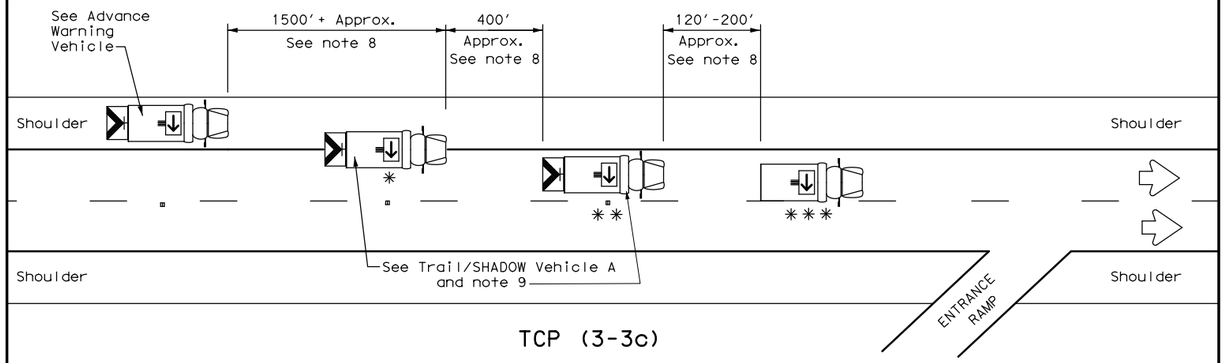

TCP (3-3c)

DIVIDED MULTILANE HIGHWAY

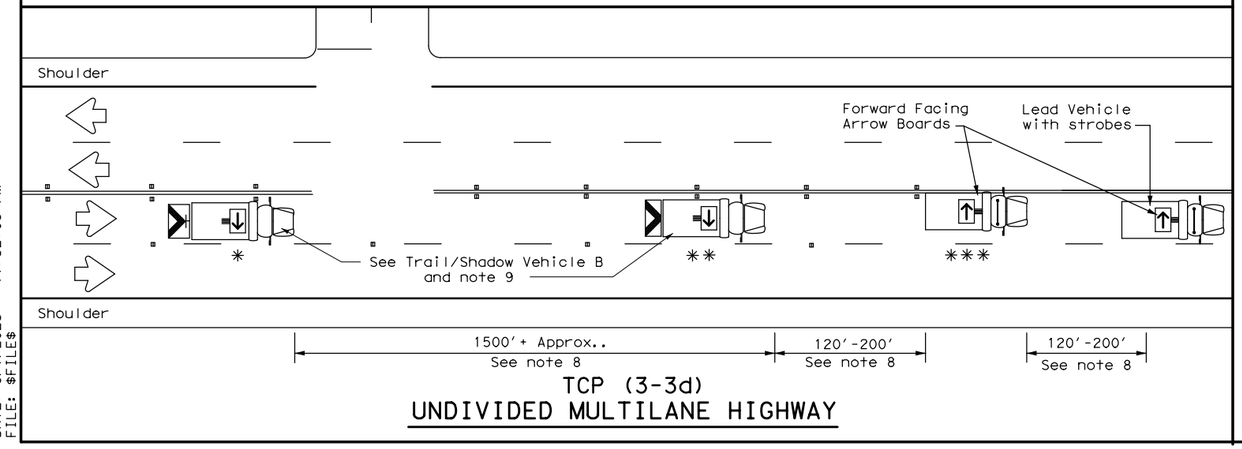

TCP (3-3d)

UNDIVIDED MULTILANE HIGHWAY

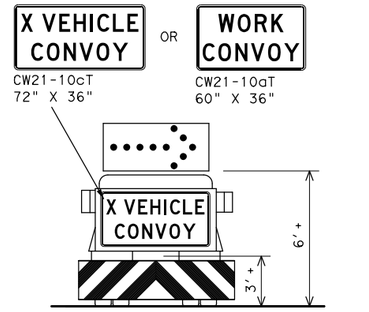

TRAIL/SHADOW VEHICLE A

with RIGHT Directional display
Flashing Arrow Board

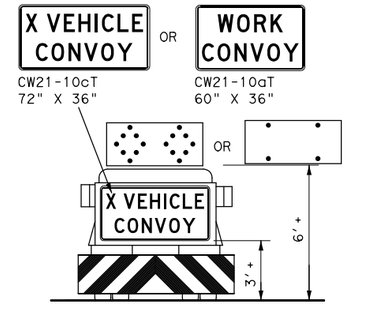

TRAIL/SHADOW VEHICLE B

with Flashing Arrow Board
in Caution Mode

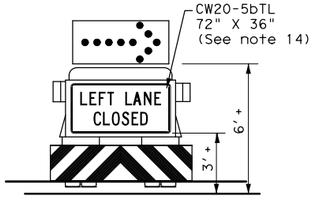

ADVANCE WARNING VEHICLE

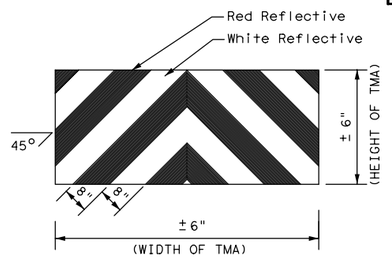

STRIPING FOR TMA

LEGEND			
*	Trail Vehicle	ARROW BOARD DISPLAY	
**	Shadow Vehicle		
***	Work Vehicle		RIGHT Directional
	Heavy Work Vehicle		LEFT Directional
	Truck Mounted Attenuator (TMA)		Double Arrow
	Traffic Flow		CAUTION (Alternating Diamond or 4 Corner Flash)

TYPICAL USAGE				
MOBILE	SHORT DURATION	SHORT TERM STATIONARY	INTERMEDIATE TERM STATIONARY	LONG TERM STATIONARY
✓				

GENERAL NOTES

1. TRAIL, SHADOW, and LEAD vehicles shall be equipped with arrow boards as illustrated. When a LEAD vehicle is not used on two way roads the WORK vehicle must have an arrow board. For divided roadways, the arrow board on the WORK vehicle is optional based on the type of work being performed. The Engineer will determine if the LEAD vehicle and/or TRAIL vehicle are required based on prevailing roadway conditions, traffic volume, and sight distance restrictions.
2. The use of amber high intensity rotating, flashing, oscillating, or strobe lights on vehicles are required. Blue high intensity rotating, flashing, oscillating, or strobe lights when mounted on the driver's side of the vehicle may be operated simultaneously with the amber beacons or strobe lights.
3. The use of truck mounted attenuators (TMA) on the SHADOW VEHICLE, ADVANCE WARNING and TRAIL VEHICLE are required.
4. Reflective sheeting on the rear of the TMA shall meet or exceed the reflectivity and color requirements of DEPARTMENTAL MATERIAL SPECIFICATION DMS 8300, Type A.
5. Flashing arrow boards shall be Type B or Type C as per the Barricade and Construction (BC) standards. The board shall be controlled from inside the vehicle.
6. Each vehicle shall have two-way radio communication capability.
7. When work convoys must change lanes, the TRAIL VEHICLE should change lanes first to shadow the other convoy vehicles.
8. Vehicle spacing between the TRAIL VEHICLE and the SHADOW VEHICLE will vary depending on sight distance restrictions. Motorists approaching the convoy should be able to see the TRAIL VEHICLE in time to slow down and/or change lanes as they approach the TRAIL VEHICLE. Vehicle spacing between the WORK VEHICLE and SHADOW VEHICLE and vehicle spacing between WORK VEHICLE and LEAD VEHICLE may vary according to terrain, work activity and other factors.
9. X VEHICLE CONVOY (CW21-10cT) or WORK CONVOY (CW21-10aT) signs shall be used on TRAIL VEHICLES and SHADOW VEHICLES as shown. As an option 48" x 48" diamond shaped WORK CONVOY (CW21-10T) or X VEHICLE CONVOY (CW21-10bT) signs may be used where adequate mounting space exists. When used, the X VEHICLE CONVOY sign shall have the number of the convoy vehicles displayed on the sign in the number designation "X" location. The X VEHICLE CONVOY sign shall not be used on the SHADOW VEHICLE if a TRAIL VEHICLE is used.
10. For divided highways with two or three lanes in one direction, the appropriate LEFT LANE CLOSED (CW20-5bTL), RIGHT LANE CLOSED (CW20-5bTR), or CENTER LANE CLOSED (CW20-5dT) sign should be used on the Advance Warning Vehicle. As an option, a portable changeable message sign (PCMS) or truck mounted changeable message sign (TMCMS) with a minimum character height of 12", and displaying the same legend may be substituted for these signs. An appropriate directional arrow display, simulating the size and legibility of the flashing arrow board may be used in the second phase of the PCMS/TMCMS message. When this is done, the arrow board will not be required on the Advance Warning Vehicle.
11. A double arrow shall not be displayed on the arrow board on the Advance Warning Vehicle.
12. For divided highways with three or four lanes in each direction, use TCP(3-2).
13. Standard diamond shape versions of the CW20-5 series signs may be used as an option if the rectangular signs shown are not available.
14. The Advance Warning Vehicle may straddle the edgeline when Shoulder width makes it necessary.
15. On two-lane two-way roadways, the work and protection vehicles should pull over periodically to allow motor vehicle traffic to pass. If motorists are not allowed to pass the work convoy, a DO NOT PASS (R4-1) sign should be placed on the back of the rearmost protection vehicle.

Texas Department of Transportation

Traffic Operations Division Standard

TRAFFIC CONTROL PLAN MOBILE OPERATIONS RAISED PAVEMENT MARKER INSTALLATION/ REMOVAL

TCP(3-3)-14

FILE: tcp3-3.dgn	DN: TxDOT	CK: TxDOT	DW: TxDOT	CK: TxDOT
©TxDOT September 1987	CONT	SECT	JOB	HIGHWAY
REVISIONS	0912	73	215	FM 270, ETC
2-94 4-98	DIST	COUNTY		SHEET NO.
8-95 7-13	HOU	GALVESTON		70
1-97 7-14				

177

DATE: 8/1/2023 11:32:09 PM
FILE: $FILE$

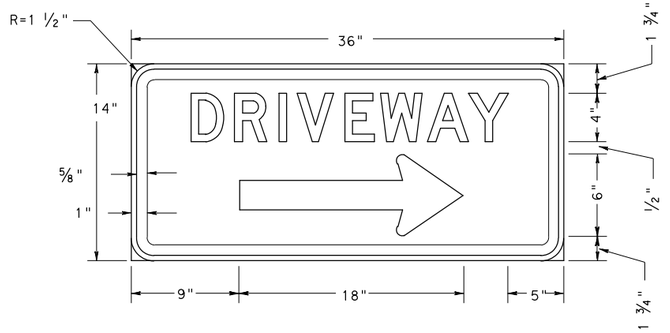

LETTERS: WHITE
BORDER: WHITE
BACKGROUND: BLUE

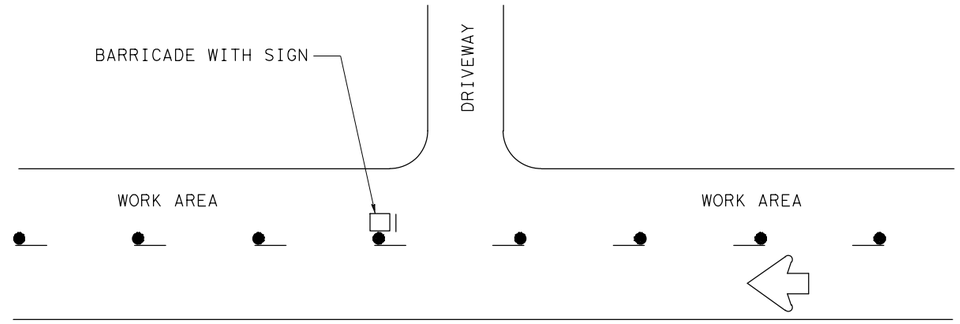

TYPICAL LOCATION OF DRIVEWAY SIGN

TYPE III PVC BARRICADES TYPICAL DESIGN DETAILS

MAY BE USED AT THE OPTION OF THE CONTRACTOR.

NOTES:

1. ALL PIPE SHALL BE POLYVINYL CHLORIDE (PVC) PRESSURE RATED PIPE SDR 21 OR SDR 26 ASTM D2241.
2. JOINT FITTINGS MAY BE PVC-ASTM D2665 OR ACRYLONITRILE BUTADIENE STYRENE (ABS) ASTM D2661 (DRAINAGE WASTE AND VENT).
3. ALL PIPE AND FITTINGS SHALL BE WHITE.
4. ALL JOINTS SHALL BE FREE TO SEPARATE UPON VEHICLE IMPACT.
5. CROSS HATCHED CONDUIT TO BE TIED TOGETHER WITH ROPE THREADED INTO PIPE INTERIOR. USE ⅜" NO. 6 SOLID BRAIDED NYLON OR EQUIVALENT.
6. A FIXED FRANGIBLE PAVEMENT CONNECTION IS PREFERRED. SAND BAGS MAY BE SUBSTITUTED.

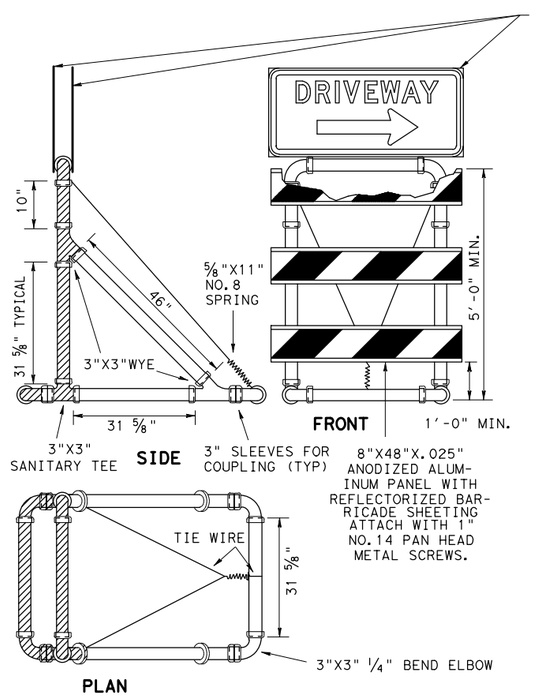

CONSTRUCTION SIGN NOTES

MATERIALS

CONSTRUCTION SIGNS SHALL BE MADE FROM APPROVED FIBERGLASS OR HIGH IMPACT PLASTIC AS PRIMARY MATERIALS.

SIGN SHEETING

REFLECTORIZED SIGN SHALL BE CONSTRUCTED OF RETRO REFLECTIVE SHEETING MEETING THE COLOR AND REFLECTIVITY REQUIREMENTS OF MATERIAL SPECIFICATIONS, DMS-8300.

TYPE C SHEETING SHALL BE USED FOR THIS APPLICATION.

SIGN LETTERS

ALL SIGNS LETTERING SHALL BE CLEAR, OPEN ROUNDED TYPE CAPITAL LETTERS AS APPROVED BY AND AS PUBLISHED BY THE FEDERAL HIGHWAY ADMINISTRATION. SIGNS AND LETTERING SHALL BE OF FIRST CLASS WORKMANSHIP EQUIVALENT TO THAT OF THE DEPARTMENT'S STANDARD SIGNS.

Texas Department of Transportation
Houston District

DRIVEWAY SIGNING

DS TC8020-04

FILE:	DN:	CK:	DW:	CK:	
© TxDOT 2004	DIST	FED REG	PROJECT NO.		SHEET
REVISIONS	HOU	6			71
	COUNTY		CONTROL	SECT	JOB	HIGHWAY
	GALVESTON		0912	73	215	FM 270, ETC

DISCLAIMER:
The use of this standard is governed by the "Texas Engineering Practice Act". No warranty of any kind is made by TxDOT for any purpose whatsoever. TxDOT assumes no responsibility for the conversion of this standard to other formats or for incorrect results or damages resulting from its use.

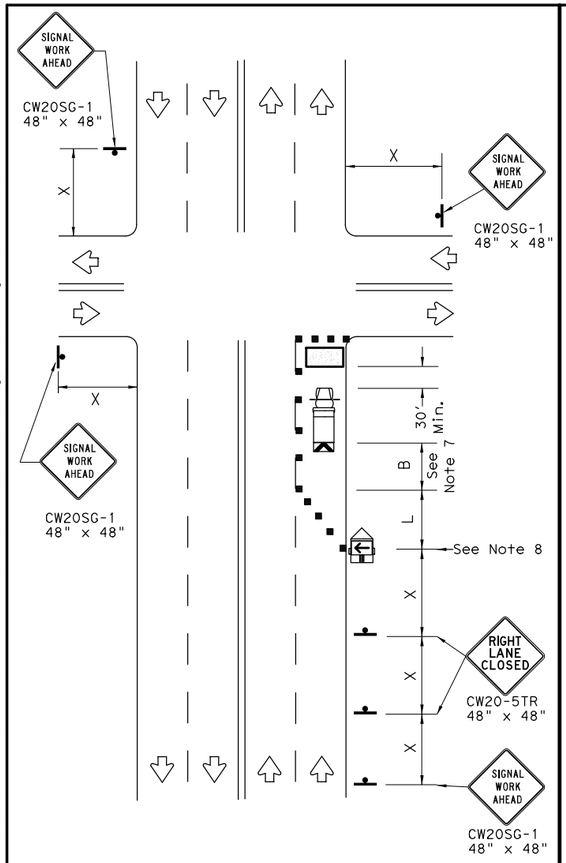

NEAR SIDE LANE CLOSURE

SHORT DURATION OR SHORT TERM STATIONARY

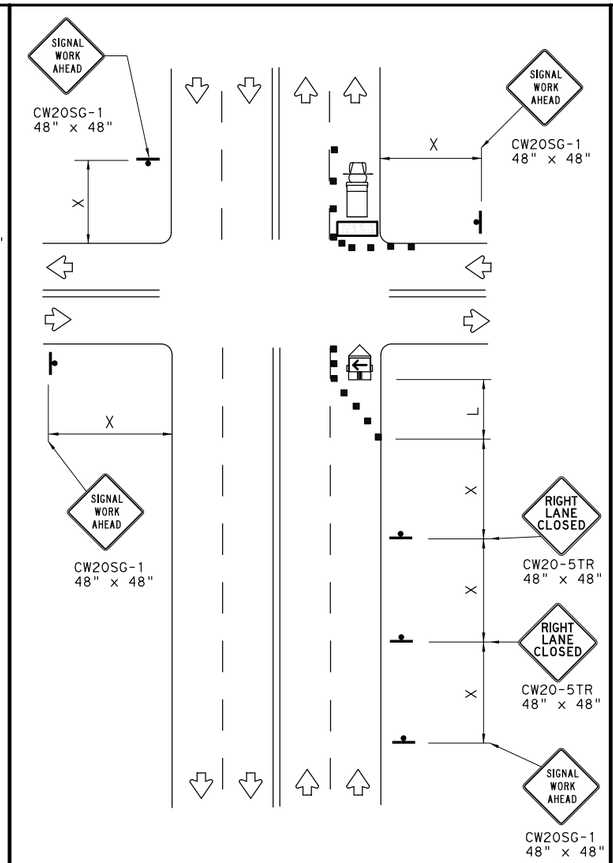

FAR SIDE RIGHT LANE CLOSURE

SHORT DURATION OR SHORT TERM STATIONARY

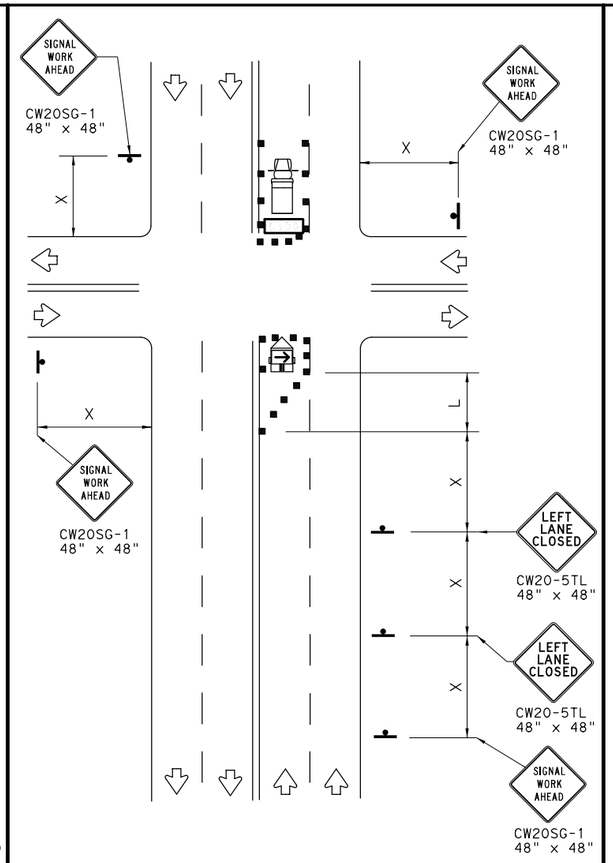

FAR SIDE LEFT LANE CLOSURE

SHORT DURATION OR SHORT TERM STATIONARY

LEGEND			
	Type 3 Barricade		Channelizing Devices
	Heavy Work Vehicle		Truck Mounted Attenuator (TMA)
	Trailer Mounted Flashing Arrow Board	M	Portable Changeable Message Sign (PCMS)
	Sign		Traffic Flow
	Flag		Flagger

Posted Speed *	Formula	Minimum Desirable Taper Lengths ** 10' Offset	11' Offset	12' Offset	Suggested Maximum Spacing of Channelizing Devices On a Taper	On a Tangent	Minimum Sign Spacing "X" Distance	Suggested Longitudinal Buffer Space "B"
30	$L=\frac{WS^2}{60}$	150'	165'	180'	30'	60'	120'	90'
35		205'	225'	245'	35'	70'	160'	120'
40		265'	295'	320'	40'	80'	240'	155'
45	L=WS	450'	495'	540'	45'	90'	320'	195'
50		500'	550'	600'	50'	100'	400'	240'
55		550'	605'	660'	55'	110'	500'	295'
60		600'	660'	720'	60'	120'	600'	350'
65		650'	715'	780'	65'	130'	700'	410'
70		700'	770'	840'	70'	140'	800'	475'
75		750'	825'	900'	75'	150'	900'	540'

* Conventional Roads Only

** Taper lengths have been rounded off.
L=Length of Taper(FT) W=Width of Offset(FT) S=Posted Speed(MPH)

WORKERS IN BUCKET TRUCKS SHALL NOT WORK ABOVE OPEN LANES OF TRAFFIC.

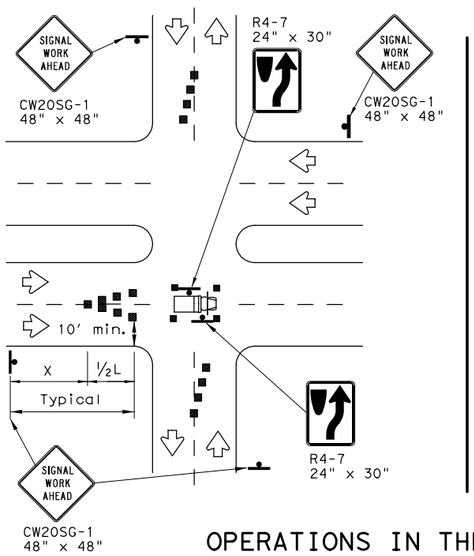

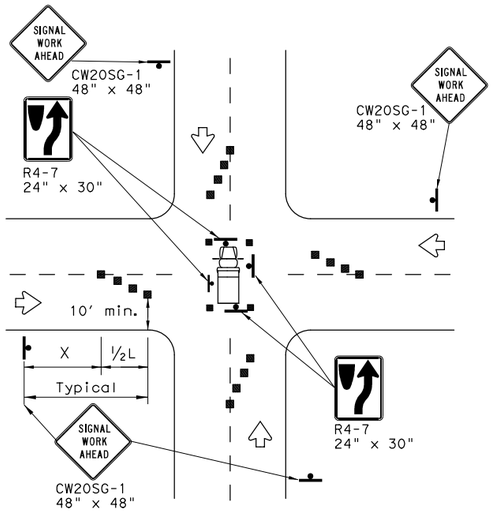

OPERATIONS IN THE INTERSECTION

SHORT DURATION

GENERAL NOTES

1. The minimum size channelizing device is the 28" cone. 42" Two-piece cones, drums, vertical panels or barricades will be required when the device must be left unattended at night.
2. Obstructions or hazards at the work area shall be clearly marked and delineated at all times.
3. Flaggers and Flagger Symbol (CW20-7) signs may be required according to field conditions.
4. Vehicles parked in roadway shall be equipped with at least two high intensity rotating, flashing, oscillating or strobe type lights.
5. High level warning devices (flag trees) may be used at corners of the vehicle.
6. When work operations are performed on existing signals, the signals may be placed in flashing red mode when approved by the engineer. If existing signals do not have power, All-Way Stop (R1-1 and R1-3P) signs may be implemented when approved by the engineer.
7. For Short-Term Stationary work the buffer space "B" from the above table should be used if field conditions permit. For Short Duration (less than 1 hour) any buffer space provided will enhance the safety of the setup.
8. The arrow board at this location may be omitted for Short Duration work if the work vehicle has an arrow board in operation. As an option, the arrow board may be placed at the end of the taper in the closed lane if space is not available at the beginning of the taper.
9. Signs and devices for the NEAR SIDE LANE CLOSURE may be altered for a left lane closure by using a LEFT LANE CLOSED (CW20-5TL) and adding channelizing devices on the centerline to protect the work space from opposing traffic.

Texas Department of Transportation

Traffic Operations Division Standard

TRAFFIC SIGNAL WORK TYPICAL DETAILS

WZ(BTS-1)-13

FILE: wzbts-13.dgn	DN: TxDOT	CK: TxDOT	DW: TxDOT	CK: TxDOT
©TxDOT April 1992	CONT	SECT	JOB	HIGHWAY
REVISIONS	0912	73	215	FM 270, ETC
2-98 10-99 7-13	DIST	COUNTY		SHEET NO.
4-98 3-03	HOU	GALVESTON		72

DATE: 8/1/2023 11:32:13 PM
FILE: $FILE$

DISCLAIMER:
The use of this standard is governed by the "Texas Engineering Practice Act". No warranty of any kind is made by TxDOT for any purpose whatsoever. TxDOT assumes no responsibility for the conversion of this standard to other formats or for incorrect results or damages resulting from its use.

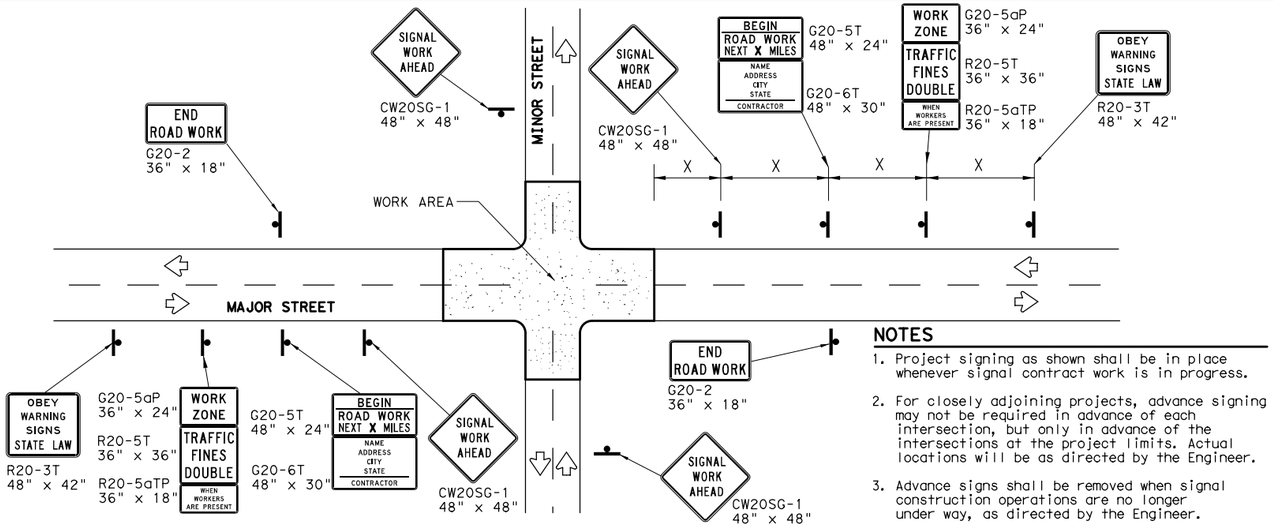

TYPICAL ADVANCE SIGNAL PROJECT SIGNING

FOR LONG TERM and INTERMEDIATE-TERM STATIONARY WORK OPERATIONS

NOTES

1. Project signing as shown shall be in place whenever signal contract work is in progress.
2. For closely adjoining projects, advance signing may not be required in advance of each intersection, but only in advance of the intersections at the project limits. Actual locations will be as directed by the Engineer.
3. Advance signs shall be removed when signal construction operations are no longer under way, as directed by the Engineer.
4. Warning sign spacing shown is typical for both directions.
5. See the Table on sheet 1 of 2 for Typical warning sign spacing.

GENERAL NOTES FOR WORK ZONE SIGNS

1. Signs shall be installed and maintained in a straight and plumb condition.
2. Wooden sign posts shall be painted white.
3. Barricades shall NOT be used as sign supports.
4. Nails shall NOT be used to attach signs to any support.
5. All signs shall be installed in accordance with the plans or as directed by the Engineer.
6. The Contractor shall furnish the sign design shown in the plans or in the "Standard Highway Sign Designs for Texas" (SHSD).
7. The Contractor shall furnish sign supports and substrates listed in the "Compliant Work Zone Traffic Control Device List" (CWZTCD), installed as per the manufacturer's recommendations.
8. Temporary signs that have damaged or cracked substrates and/or damaged or marred reflective sheeting shall be replaced as directed by the Engineer.
9. Identification markings may be shown only on the back of the sign substrate. The maximum height of letters and/or company logos used for identification shall be 1".
10. Damaged wood posts shall be replaced. Splicing wood posts will not be allowed.

DURATION OF WORK

1. Work zone durations are defined in Part 6, Section 6G.02 of the Texas Manual on Uniform Traffic Control Devices (TMUTCD).

SIGN MOUNTING HEIGHT

1. Sign height of Long-term/Intermediate-term warning signs shall be as shown on Figure 6F-1 of the TMUTCD.
2. Sign height of Short-term/Short Duration warning signs shall be as shown on Figure 6F-2 of the TMUTCD.
3. Regulatory signs shall be mounted at least 7 feet, but not more than 9 feet, above the paved surface regardless of work duration.

REMOVING OR COVERING

1. When sign messages may be confusing or do not apply, the signs shall be removed or completely covered, unless otherwise approved by the Engineer.
2. When signs are covered, the material used shall be opaque, such as heavy mil black plastic, or other materials which will cover the entire sign face and maintain their opaque properties under automobile headlights at night without damaging the sign sheeting. Burlap, or heavy materials such as plywood or aluminum shall not be used to cover signs.
3. Duct tape or other adhesive material shall NOT be affixed to a sign face.
4. Signs and anchor stubs shall be removed and holes back filled upon completion of the work.

REFLECTIVE SHEETING

1. All signs shall be retroreflective and constructed of sheeting meeting the requirements of the DMS and color usage table shown on this sheet.

SIGN SUPPORT WEIGHTS

1. Weights used to keep signs from turning over should be sandbags filled with dry, cohesionless material.
2. The sandbags will be tied shut to keep the sand from spilling and to maintain a constant weight.
3. Rock, concrete, iron, steel or other solid objects will not be permitted for use as sign support weights.
4. Sandbags should weigh a minimum of 35 lbs and a maximum of 50 lbs.
5. Sandbags shall be made of a durable material that tears upon vehicular impact. Rubber, such as tire inner tubes, shall not be used.
6. Rubber ballasts designed for channelizing devices should not be used for ballast on portable sign supports. Sign supports designed and manufactured with rubber bases may be used when shown on the CWZTCD list.
7. Sandbags shall only be placed along or laid over the base supports of the traffic control device and shall not be suspended above ground level or hung with rope, wire, chains or other fastners. Sandbags shall be placed along the length of the skids to weigh down the sign support.
8. Sandbags shall NOT be placed under the skid and shall not be used to level sign supports placed on slopes.

LEGEND	
	Sign
	Channelizing Devices
	Type 3 Barricade

DEPARTMENTAL MATERIAL SPECIFICATIONS	
SIGN FACE MATERIALS	DMS-8300
FLEXIBLE ROLL-UP REFLECTIVE SIGNS	DMS-8310

COLOR	USAGE	SHEETING MATERIAL
ORANGE	BACKGROUND	TYPE B_{FL} OR TYPE C_{FL} SHEETING
WHITE	BACKGROUND	TYPE A SHEETING
BLACK	LEGEND & BORDERS	ACRYLIC NON-REFLECTIVE SHEETING

Only pre-qualified products shall be used. A copy of the "Compliant Work Zone Traffic Control Devices List" (CWZTCD) describes pre-qualified products and their sources and may be found at the following web address:
http://www.txdot.gov/txdot_library/publications/construction.htm

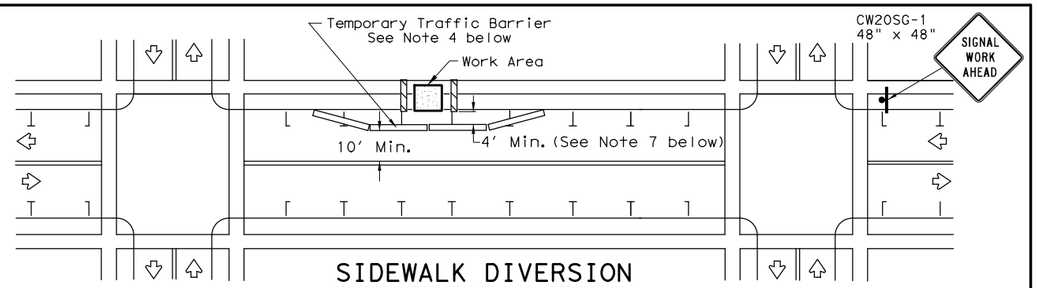

SIDEWALK DIVERSION

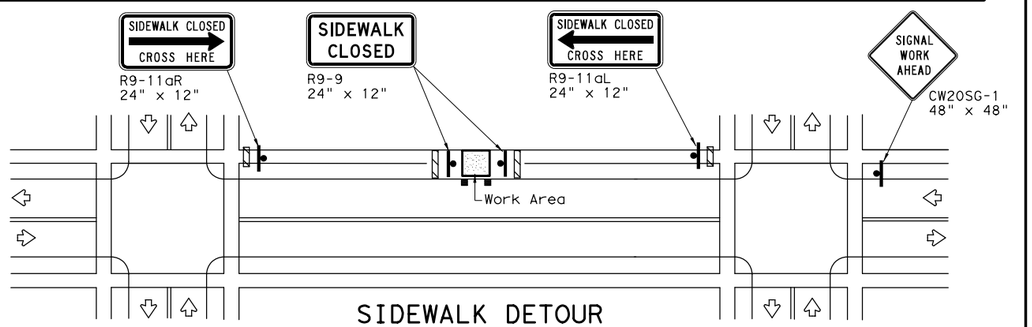

SIDEWALK DETOUR

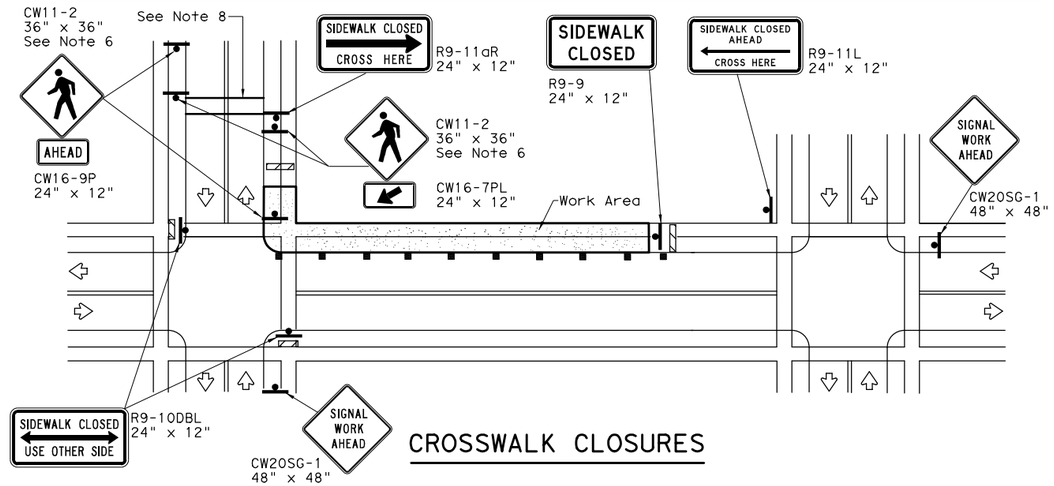

CROSSWALK CLOSURES

PEDESTRIAN CONTROL

1. Holes, trenches or other hazards shall be adequately protected by covering, delineating or surrounding the hazard with orange plastic pedestrian fencing or longitudinal channelizing devices, or as directed by the Engineer.
2. "CROSSWALK CLOSURES" as detailed above will require the Engineer's approval prior to installation.
3. R9 series signs shown may be placed on supports detailed on the BC standards or CWZTCD list, or when fabricated from approved lightweight plastic substrates, they may be mounted on top of a plastic drum at or near the location shown.
4. For speeds less than 45 mph longitudinal channelizing devices may be used instead of traffic barriers when approved by the Engineer. Attenuation of blunt ends and installation of water filled devices shall be as per BC(9) and manufacturer's recommendations.
5. Location of devices are for general guidance. Actual device spacing and location must be field adjusted to meet actual conditions.
6. Where pedestrians with visual disabilities normally use the closed sidewalk Detectable Pedestrian Barricades should be used instead of the Type 3 Barricades shown.
7. The width of existing sidewalk should be maintained if practical.
8. Pavement markings for mid-block crosswalks shall be paid for under the appropriate bid items.
9. When crosswalks or other pedestrian facilities are closed or relocated, temporary facilities shall be detectable and shall include accessibility features consistent with the features present in the existing pedestrian facility.

Texas Department of Transportation | Traffic Operations Division Standard

TRAFFIC SIGNAL WORK BARRICADES AND SIGNS

WZ(BTS-2)-13

FILE: wzbts-13.dgn	DN: TxDOT	CK: TxDOT	DW: TxDOT	CK: TxDOT
© TxDOT April 1992	CONT	SECT	JOB	HIGHWAY
REVISIONS	0912	73	215	FM 270, ETC
2-98 10-99 7-13	DIST	COUNTY		SHEET NO.
4-98 3-03	HOU	GALVESTON		73

DATE: 8/1/2023 11:32:13 PM
FILE: $FILE$

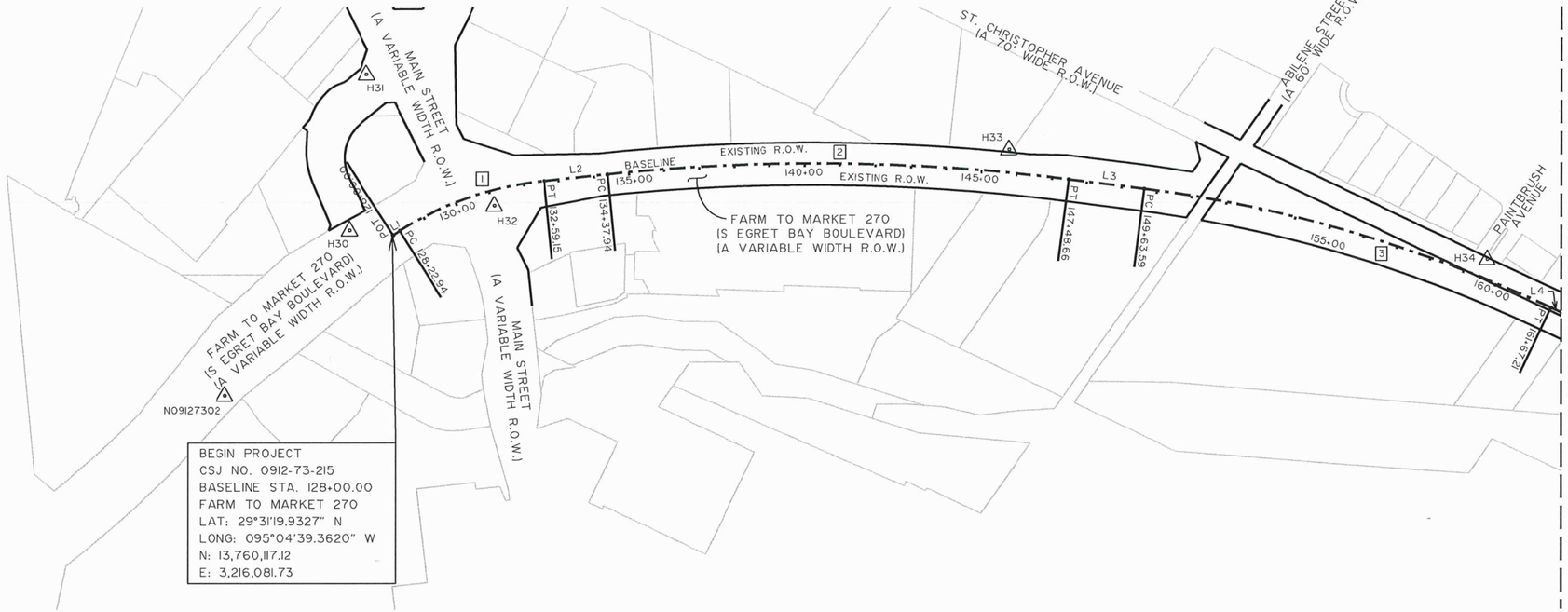

BEGIN PROJECT
CSJ NO. 0912-73-215
BASELINE STA. 128+00.00
FARM TO MARKET 270
LAT: 29°31'19.9327" N
LONG: 095°04'39.3620" W
N: 13,760,117.12
E: 3,216,081.73

NOTES:

1. ALL BEARINGS ARE REFERENCED TO THE TEXAS COORDINATE SYSTEM OF 1983, SOUTH CENTRAL ZONE (NAD83, 2011 ADJUSTMENT, EPOCH 2010.00). ESTABLISHED BY GPS OBS (RTN), HELD HORIZONTAL MONUMENTS TXDOT LA MARQUE BASE STATION, TXDOT GALVESTON BASE STATION, TXDOT ANGLETON BASE STATION, TXAC, TXAU, TXGA, TXHE, TXLI, TXLM, TXOR AND TXWH.

2. ALL DISTANCES AND COORDINATES ARE IN US SURVEY FEET DISPLAYED IN SURFACE VALUES WITH THE TxDOT SURFACE ADJUSTMENT FACTOR OF 1.000130.

3. ALL ELEVATIONS ARE REFERENCED TO THE NORTH AMERICAN VERTICAL DATUM OF 1988 (NAVD88) USING GEOID12B. ESTABLISHED BY GPS OBS (RTN), HELD VERTICAL MONUMENTS TXAC, TXAU, TXGA, TXHE, TXLI, TXLM, TXOR AND TXWH. ESTABLISHED BY DIGITAL LEVELS HOLDING VERTICAL MONUMENT N09127302.

N09127301

POINT INFO TABLE

POINT No.	LATITUDE (N)	LONGITUDE (W)	GRID NORTHING	GRID EASTING	SURFACE NORTHING	SURFACE EASTING	ELEVATION	DESCRIPTION
N09127301	29°31'26.7855"	095°05'02.1304"	13,758,952.92	3,213,630.32	13,760,741.58	3,214,048.09	12.40'	CP-3.25" TXDOT DISK IN CONC
N09127302	29°31'21.1157"	095°04'46.6572"	13,758,426.35	3,215,015.61	13,760,214.95	3,215,433.56	13.33'	CP-3.25" TXDOT DISK IN CONC
N09127303	29°32'16.5526"	095°01'07.0577"	13,764,677.68	3,234,213.01	13,766,467.09	3,234,633.46	14.49'	CP-3.25" TXDOT DISK IN CONC
N09127304	29°32'09.4792"	095°01'15.2049"	13,763,939.16	3,233,918.12	13,765,728.47	3,233,938.48	11.72'	CP-3.25" TXDOT DISK IN CONC
H30	29°31'20.9851"	095°04'40.0390"	13,758,432.76	3,215,600.36	13,760,221.36	3,216,018.39	14.11'	CP-3.25" TXDOT DISK IN CONC
H31	29°31'23.1602"	095°04'35.6886"	13,758,665.22	3,215,977.06	13,760,453.85	3,216,395.14	13.67'	CP-3.25" TXDOT DISK IN CONC
H32	29°31'18.1133"	095°04'36.6894"	13,758,152.79	3,215,905.82	13,759,941.35	3,216,323.89	12.33'	CP-3.25" TXDOT DISK IN CONC
H33	29°31'07.3454"	095°04'25.5742"	13,757,098.74	3,216,923.68	13,758,887.17	3,217,341.88	16.32'	CP-3.25" TXDOT DISK IN CONC
H34	29°30'54.6844"	095°04'19.4213"	13,755,838.91	3,217,509.87	13,757,627.17	3,217,928.15	15.31'	CP-3.25" TXDOT DISK IN ASPHALT
H35	29°30'41.7716"	095°04'16.9419"	13,754,542.75	3,217,772.60	13,756,330.84	3,218,190.91	13.60'	CP-3.25" TXDOT DISK IN CONC
H36	29°30'29.8783"	095°04'08.4955"	13,753,367.24	3,218,558.77	13,755,155.17	3,218,977.18	17.04'	CP-3.25" TXDOT DISK IN CONC
H37	29°30'17.1827"	095°04'02.3815"	13,752,103.82	3,219,141.74	13,753,891.59	3,219,560.23	16.60'	CP-3.25" TXDOT DISK IN CONC
H38	29°30'04.4396"	095°03'54.5270"	13,750,840.79	3,219,878.62	13,752,628.40	3,220,297.21	20.75'	CP-3.25" TXDOT DISK IN ASPHALT
H39	29°29'52.8269"	095°03'50.4097"	13,749,680.76	3,220,281.68	13,751,468.22	3,220,700.31	19.54'	GPSE-MAGNAIL W/ SHINER
H40	29°29'44.0867"	095°03'47.2015"	13,748,808.02	3,220,594.70	13,750,595.36	3,221,013.38	16.79'	CP-3.25" TXDOT DISK IN CONC
H41	29°29'46.6705"	095°03'35.0937"	13,749,104.86	3,221,655.17	13,750,892.24	3,222,073.99	16.45'	GPSE-MAGNAIL W/ SHINER
H42	29°29'54.1160"	095°03'21.4259"	13,749,897.15	3,222,836.63	13,751,684.64	3,223,255.80	19.05'	CP-3.25" TXDOT DISK IN CONC
H43	29°29'56.1290"	095°03'05.9266"	13,750,146.57	3,224,198.69	13,751,934.08	3,224,617.84	21.23'	CP-3.25" TXDOT DISK IN CONC
H44	29°30'01.9524"	095°02'52.7520"	13,750,773.72	3,225,342.25	13,752,561.32	3,225,761.54	20.02'	GPSE-MAGNAIL W/ SHINER
H45	29°30'08.4409"	095°02'40.7555"	13,751,464.54	3,226,379.46	13,753,252.23	3,226,798.89	16.13'	CP-3.25" TXDOT DISK IN CONC
H46	29°30'16.3855"	095°02'33.4871"	13,752,288.23	3,226,994.15	13,754,076.03	3,227,413.66	17.51'	GPSE-MAGNAIL W/ SHINER
H47	29°30'25.6717"	095°02'20.6784"	13,753,263.94	3,228,093.44	13,755,051.86	3,228,513.09	16.54'	CP-3.25" TXDOT DISK IN CONC
H48	29°30'34.0649"	095°02'08.2828"	13,754,148.30	3,229,159.25	13,755,935.33	3,229,579.04	12.90'	CP-3.25" TXDOT DISK IN CONC
H49	29°30'44.0120"	095°01'58.2954"	13,755,182.32	3,230,007.06	13,756,973.50	3,230,426.96	15.28'	GPSE-MAGNAIL W/ SHINER
H50	29°30'51.0681"	095°01'44.3185"	13,755,936.50	3,231,216.96	13,757,724.78	3,231,637.02	11.38'	CP-3.25" TXDOT DISK IN CONC
H51	29°31'07.8399"	095°01'20.1612"	13,756,951.59	3,232,288.57	13,758,740.00	3,232,708.77	15.95'	CP-3.25" TXDOT DISK IN ASPHALT
H52	29°31'07.8399"	095°01'20.1612"	13,757,702.06	3,233,297.32	13,759,490.55	3,233,717.65	15.81'	CP-3.25" TXDOT DISK IN CONC
H53	29°31'17.5944"	095°01'09.3219"	13,758,711.73	3,234,216.05	13,760,500.37	3,234,636.50	15.94'	CP-3.25" TXDOT DISK IN ASPHALT
H54	29°31'24.3069"	095°00'58.6665"	13,759,428.94	3,235,133.41	13,761,217.67	3,235,553.98	17.36'	GPSE-MAGNAIL W/ SHINER
H55	29°31'30.7913"	095°00'48.6980"	13,760,113.51	3,235,991.21	13,761,902.33	3,236,411.89	18.13'	CP-3.25" TXDOT DISK IN CONC
H56	29°31'34.7732"	095°00'40.1696"	13,760,541.16	3,236,730.43	13,762,330.03	3,237,151.20	17.91'	GPSE-MAGNAIL W/ SHINER
H20020013	29°28'59.7231"	095°02'49.7524"	13,744,500.89	3,225,819.53	13,746,287.68	3,226,238.89	16.29'	CP-3.25" TACC STAMPED "H20020013"
H20020014	29°28'16.0594"	095°02'48.8369"	13,740,095.99	3,226,049.73	13,741,882.20	3,226,468.82	14.16'	CP-3.25" TACC STAMPED "H20020014"
H-9	29°29'33.7534"	095°02'50.9413"	13,747,932.56	3,225,598.38	13,749,719.79	3,226,017.71	18.89'	CP-3.25" TACC STAMPED "H-9"
H-21	29°29'54.8901"	094°59'42.7757"	13,750,631.73	3,242,142.75	13,752,419.31	3,242,564.23	13.51'	CP-3.25" TACC STAMPED "H-21"
H-62	29°30'39.5339"	095°00'09.0692"	13,755,058.81	3,239,666.75	13,756,846.97	3,240,087.91	15.53'	CP-3.25" TACC STAMPED "H-62"

TRAVERSE TABLE

FROM	TO	BEARING	DISTANCE
N09127301	N09127302	S 69°11'16" E	1,482.18'
N09127302	H30	N 89°22'19" E	584.87'
H30	H31	N 58°19'18" E	442.71'
H31	H32	S 07°54'53" W	517.43
H32	H33	S 43°59'58" E	1,465.47'
H33	H34	S 24°57'08" E	1,389.72'
H34	H35	S 11°27'30" E	1,322.69'
H35	H36	S 33°46'26" E	1,414.36'
H36	H37	S 24°46'12" E	1,391.61'
H37	H38	S 30°15'38" E	1,462.46'
H38	H39	S 19°09'35" E	1,228.21'
H39	H40	S 19°43'53" E	927.31'
H40	H41	N 74°21'44" E	1,101.38'
H41	H42	N 56°09'30" E	1,422.87'
H42	H43	N 79°37'19" E	1,384.69'
H43	H44	N 61°15'30" E	1,304.41'
H44	H-9	S 05°09'05" E	2,853.05'
H-9	H20020013	S 03°41'14" E	3,439.23'
H20020013	H20020014	S 02°59'16" E	4,411.48'
H44	H45	N 56°20'06" E	1,246.38'
H45	H46	N 36°43'57" E	1,027.91'
H46	H47	N 48°24'30" E	1,470.03'
H47	H48	N 50°18'57" E	1,385.11'
H48	H49	N 39°20'54" E	1,337.34'
H49	H50	N 58°03'47" E	1,425.90'
H50	H51	N 46°33'06" E	1,476.25'
H51	H52	N 53°12'59" E	1,253.44'
H52	H53	N 42°27'16" E	1,368.66'
H53	H54	N 51°58'52" E	1,164.60'
H54	H55	N 51°24'29" E	1,097.62'
H55	H56	N 59°57'00" E	854.11'
H56	H-62	S 28°10'24" E	6,219.98'
H-62	H-21	S 29°13'03" E	5,073.10'
H56	N09127303	N 31°9'26" W	4,842.96'
N09127303	N09127304	S 43°15'23" W	1,014.18'

LEGEND:

CP CONTROL POINT
GPSE GPS MONUMENT EXISTING

LINE TABLE

POINT No.	BEARING	DISTANCE
L1	S 69°54'19" E	22.94'
L2	S 43°43'57" E	178.81'
L3	S 30°37'32" E	214.96'
L4	S 12°34'16" E	331.20'

1
BASELINE CURVE DATA:
PI STATION: 130+41.07
RADIUS: 955.05'
DELTA: 26° 10' 22" (RT)
LENGTH: 436.27'
TANGENT LENGTH: 222.01'
CHORD BEARING: S 56° 49' 08" E
CHORD DISTANCE: 432.49'
PI NORTHING: 13,760,032.96
PI EASTING: 3,216,311.77

2
BASELINE CURVE DATA:
PI STATION: 140+93.46
RADIUS: 5,730.32'
DELTA: 13° 06' 26" (RT)
LENGTH: 1,310.89'
TANGENT LENGTH: 658.32'
CHORD BEARING: S 37° 10' 44" E
CHORD DISTANCE: 1,308.03'
PI NORTHING: 13,759,267.85
PI EASTING: 3,217,043.95

3
BASELINE CURVE DATA:
PI STATION: 155+65.73
RADIUS: 3,820.22'
DELTA: 18° 03' 16" (RT)
LENGTH: 1,203.78'
TANGENT LENGTH: 606.92'
CHORD BEARING: S 21° 35'54" E
CHORD DISTANCE: 1,198.80'
PI NORTHING: 13,757,993.92
PI EASTING: 3,217,797.99

SCALE (FEET)
0 200 400 600
U.S. SURVEY FEET
22" x 34" SCALE: 1" = 200'
11" x 17" SCALE: 1" = 400'

THE SURVEY CONTROL INFORMATION HAS BEEN ACCEPTED AND INCORPORATED INTO THIS PSBE

STATE OF TEXAS
REGISTERED
JIBRAEL K. AHMAD
6183
PROFESSIONAL
LAND SURVEYOR
Feb 24 22

THE CONTROL POINTS SHOWN HEREIN WERE DETERMINED BY A SURVEY MADE ON THE GROUND UNDER MY SUPERVISION.

JONES|CARTER
2322 West Grand Parkway North, Suite 150
• Katy, Texas 77449 • 832.913.4000
Texas Board of Professional Engineers and Land Surveyors Registration No. 10046100

SURVEY CONTROL INDEX SHEET
FARM TO MARKET 270

1 OF 7

FED. RD. DIV. NO.	FEDERAL AID PROJECT		SHEET NO.
06			74
STATE	DIST.	COUNTY	
TEXAS	12	GALVESTON	
CONT.	SECT.	JOB	HIGHWAY
0912	73	215	FM 270, ETC

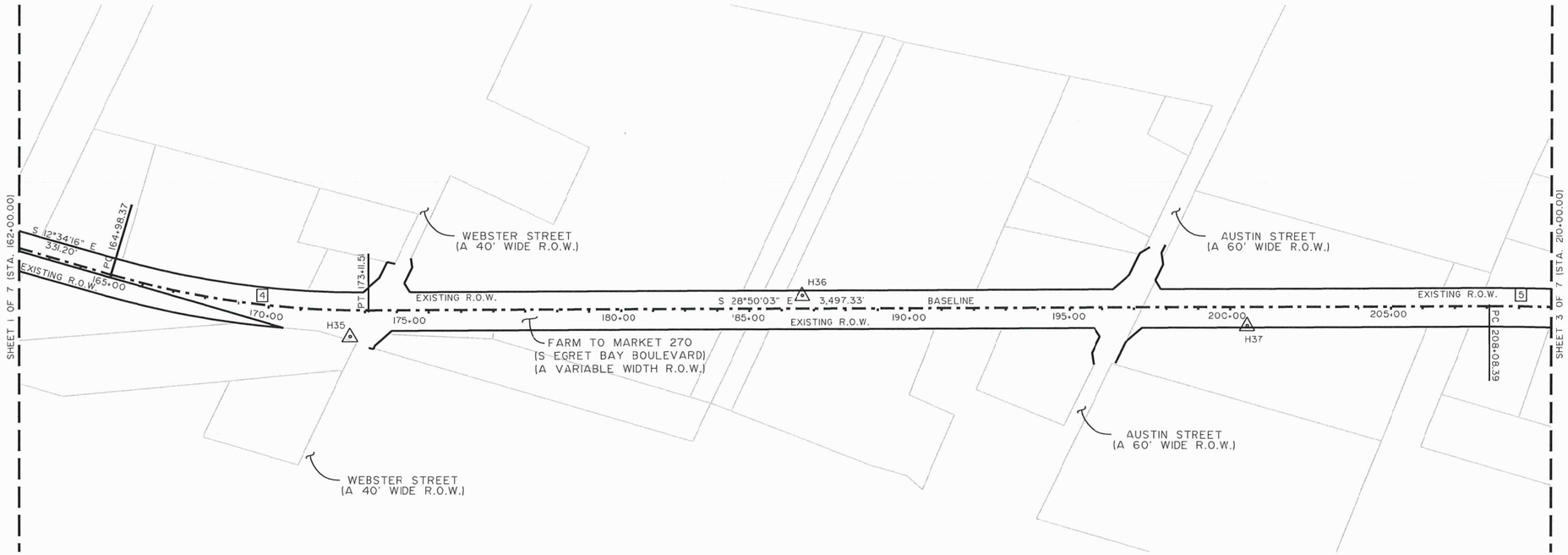

NOTES:

1. ALL BEARINGS ARE REFERENCED TO THE TEXAS COORDINATE SYSTEM OF 1983, SOUTH CENTRAL ZONE (NAD83, 2011 ADJUSTMENT, EPOCH 2010.00). ESTABLISHED BY GPS OBS (RTN), HELD HORIZONTAL MONUMENTS TXDOT LA MARQUE BASE STATION, TXDOT GALVESTON BASE STATION, TXDOT ANGLETON BASE STATION, TXAC, TXAU, TXGA, TXHE, TXLI, TXLM, TXOR AND TXWH.

2. ALL DISTANCES AND COORDINATES ARE IN US SURVEY FEET DISPLAYED IN SURFACE VALUES WITH THE TxDOT SURFACE ADJUSTMENT FACTOR OF 1.000130.

3. ALL ELEVATIONS ARE REFERENCED TO THE NORTH AMERICAN VERTICAL DATUM OF 1988 (NAVD88) USING GEOID12B. ESTABLISHED BY GPS OBS (RTN), HELD VERTICAL MONUMENTS TXAC, TXAU, TXGA, TXHE, TXLI, TXLM, TXOR AND TXWH. ESTABLISHED BY DIGITAL LEVELS HOLDING VERTICAL MONUMENT N09127302.

POINT INFO TABLE

POINT No.	LATITUDE (N)	LONGITUDE (W)	GRID NORTHING	GRID EASTING	SURFACE NORTHING	SURFACE EASTING	ELEVATION	DESCRIPTION
N09127301	29°31'26.7855"	095°05'02.1304"	13,758,952.92	3,213,630.32	13,760,741.58	3,214,048.09	12.40'	CP-3.25" TXDOT DISK IN CONC
N09127302	29°31'21.1157"	095°04'46.6572"	13,758,426.35	3,215,015.61	13,760,214.95	3,215,433.56	13.33'	CP-3.25" TXDOT DISK IN CONC
N09127303	29°32'16.5526"	095°01'07.0577"	13,764,677.68	3,234,213.01	13,766,467.09	3,234,633.46	14.49'	CP-3.25" TXDOT DISK IN CONC
N09127304	29°32'09.4792"	095°01'15.2049"	13,763,939.16	3,233,518.12	13,765,728.47	3,233,938.48	11.72'	CP-3.25" TXDOT DISK IN CONC
H30	29°31'20.9851"	095°04'40.0390"	13,758,432.76	3,215,600.36	13,760,221.36	3,216,018.39	14.11'	CP-3.25" TXDOT DISK IN CONC
H31	29°31'23.1602"	095°04'35.6888"	13,758,665.22	3,215,977.06	13,760,453.85	3,216,395.14	13.67'	CP-3.25" TXDOT DISK IN CONC
H32	29°31'18.833"	095°04'36.6894"	13,758,152.73	3,215,905.82	13,759,941.35	3,216,323.89	12.33'	CP-3.25" TXDOT DISK IN CONC
H33	29°31'07.3454"	095°04'25.5742"	13,757,098.74	3,216,923.68	13,758,887.17	3,217,341.88	16.32'	CP-3.25" TXDOT DISK IN CONC
H34	29°30'54.6844"	095°04'19.4213"	13,755,838.91	3,217,509.87	13,757,627.17	3,217,928.15	15.31'	CP-3.25" TXDOT DISK IN ASPHALT
H35	29°30'41.7716"	095°04'16.9419"	13,754,542.75	3,217,772.50	13,756,330.84	3,218,190.91	13.60'	CP-3.25" TXDOT DISK IN CONC
H36	29°30'29.8783"	095°04'08.4955"	13,753,367.24	3,218,558.77	13,755,155.17	3,218,977.18	17.04'	CP-3.25" TXDOT DISK IN CONC
H37	29°30'17.1827"	095°04'02.3815"	13,752,103.82	3,219,141.74	13,753,691.59	3,219,560.23	16.60'	CP-3.25" TXDOT DISK IN CONC
H38	29°30'04.4396"	095°03'54.5270"	13,750,840.19	3,219,878.62	13,752,628.40	3,220,297.21	20.75'	CP-3.25" TXDOT DISK IN ASPHALT
H39	29°29'52.8269"	095°03'50.4097"	13,749,680.76	3,220,281.68	13,751,468.22	3,220,700.31	19.54'	GPSE-MAGNAIL W/ SHINER
H40	29°29'44.0867"	095°03'47.2015"	13,748,808.02	3,220,594.70	13,750,595.36	3,221,013.38	16.79'	CP-3.25" TXDOT DISK IN CONC
H41	29°29'46.6705"	095°03'35.0937"	13,749,104.86	3,221,655.17	13,750,892.24	3,222,073.99	16.45'	GPSE-MAGNAIL W/ SHINER
H42	29°29'54.1160"	095°03'21.4259"	13,749,897.15	3,222,836.83	13,751,684.64	3,223,255.80	19.05'	CP-3.25" TXDOT DISK IN CONC
H43	29°29'56.1290"	095°03'05.9266"	13,750,146.57	3,224,198.69	13,751,934.08	3,224,617.84	21.23'	CP-3.25" TXDOT DISK IN CONC
H44	29°30'01.9524"	095°02'52.7520"	13,750,773.12	3,225,342.25	13,752,561.32	3,225,761.54	20.02'	GPSE-MAGNAIL W/ SHINER
H45	29°30'08.4409"	095°02'40.7555"	13,751,464.54	3,226,379.46	13,753,252.23	3,226,798.89	16.13'	CP-3.25" TXDOT DISK IN CONC
H46	29°30'16.3855"	095°02'33.4871"	13,752,288.23	3,226,994.15	13,754,076.03	3,227,413.66	17.51'	GPSE-MAGNAIL W/ SHINER
H47	29°30'25.6717"	095°02'20.6784"	13,753,263.94	3,228,093.44	13,755,051.86	3,228,513.09	16.54'	CP-3.25" TXDOT DISK IN CONC
H48	29°30'34.0649"	095°02'08.2828"	13,754,148.30	3,229,159.25	13,755,936.33	3,229,579.04	12.90'	CP-3.25" TXDOT DISK IN CONC
H49	29°30'44.0120"	095°01'58.2954"	13,755,182.32	3,230,007.06	13,756,970.50	3,230,426.96	15.28'	GPSE-MAGNAIL W/ SHINER
H50	29°30'51.0681"	095°01'44.3185"	13,755,936.50	3,231,216.96	13,757,724.78	3,231,637.02	11.38'	CP-3.25" TXDOT DISK IN CONC
H51	29°31'07.8399"	095°01'20.1612"	13,756,951.59	3,232,288.57	13,758,740.00	3,232,708.77	15.95'	CP-3.25" TXDOT DISK IN ASPHALT
H52	29°31'07.8399"	095°01'20.1612"	13,757,702.05	3,233,292.32	13,759,490.55	3,233,712.65	15.81'	CP-3.25" TXDOT DISK IN CONC
H53	29°31'17.5194"	095°01'09.3219"	13,758,711.73	3,234,216.05	13,760,500.37	3,234,636.50	15.94'	CP-3.25" TXDOT DISK IN ASPHALT
H54	29°31'24.3069"	095°00'58.6669"	13,759,428.94	3,235,133.41	13,761,217.67	3,235,553.98	17.36'	GPSE-MAGNAIL W/ SHINER
H55	29°31'30.7913"	095°00'48.6960"	13,760,113.5	3,235,991.21	13,761,902.33	3,236,411.89	18.13'	CP-3.25" TXDOT DISK IN CONC
H56	29°31'34.7732"	095°00'40.1696"	13,760,541.15	3,236,730.43	13,762,330.03	3,237,151.20	17.91'	GPSE-MAGNAIL W/ SHINER
H20020013	29°28'59.7231"	095°02'49.7524"	13,744,500.89	3,225,819.53	13,746,287.68	3,226,238.89	16.29'	CP-3.25" TACC STAMPED "H20020013"
H20020014	29°28'16.0594"	095°02'48.8369"	13,740,095.99	3,226,049.43	13,741,882.20	3,226,468.82	14.16'	CP-3.25" TACC STAMPED "H20020014"
H-9	29°29'33.7534"	095°02'50.9413"	13,747,932.56	3,225,598.38	13,749,719.79	3,226,017.71	18.89'	CP-3.25" TACC STAMPED "H-9"
H-21	29°29'54.8901"	094°59'42.7727"	13,750,631.73	3,242,142.75	13,752,419.31	3,242,564.23	13.59'	CP-3.25" TACC STAMPED "H-21"
H-62	29°30'39.5339"	095°00'09.0692"	13,755,058.8	3,239,666.75	13,756,846.97	3,240,087.91	15.53'	CP-3.25" TACC STAMPED "H-62"

TRAVERSE TABLE

FROM	TO	BEARING	DISTANCE
N09127301	N09127302	S 69°11'16" E	1,482.18'
N09127302	H30	N 89°22'19" E	584.87'
H30	H31	N 58°19'18" E	442.71'
H31	H32	S 07°54'53" W	517.43'
H32	H33	S 43°59'58" E	1,465.47'
H33	H34	S 24°57'08" E	1,389.72'
H34	H35	S 11°27'30" E	1,322.69'
H35	H36	S 33°46'26" E	1,414.36'
H36	H37	S 24°46'12" E	1,391.61'
H37	H38	S 30°15'38" E	1,462.46'
H38	H39	S 19°09'35" E	1,228.21'
H39	H40	S 19°43'53" E	927.31'
H40	H41	N 74°21'44" E	1,101.38'
H41	H42	N 56°09'30" E	1,422.87'
H42	H43	N 79°37'19" E	1,384.69'
H43	H44	N 61°15'30" E	1,304.41'
H44	H-9	S 05°09'05" E	2,853.05'
H-9	H20020013	S 03°46'14" E	3,439.23'
H20020013	H20020014	S 02°59'16" E	4,411.48'
H44	H45	N 56°20'06" E	1,246.38'
H45	H46	N 36°43'57" E	1,027.91'
H46	H47	N 48°24'30" E	1,470.03'
H47	H48	N 50°18'57" E	1,385.11'
H48	H49	N 39°20'54" E	1,337.34'
H49	H50	N 56°03'47" E	1,425.90'
H50	H51	N 46°33'06" E	1,476.25'
H51	H52	N 53°12'59" E	1,253.44'
H52	H53	N 42°27'16" E	1,368.66'
H53	H54	N 51°58'52" E	1,164.60'
H54	H55	N 51°24'29" E	1,097.62'
H55	H56	N 55°57'00" E	854.11'
H56	H-62	S 28°10'24" E	6,219.98'
H-62	H-21	S 29°13'03" E	5,073.10'
H56	N09127303	N 3°19'26" W	4,842.96'
N09127303	N09127304	S 43°15'23" W	1,014.18'

LEGEND:

CP CONTROL POINT
GPSE GPS MONUMENT EXISTING

4

BASELINE CURVE DATA:

PI STATION:	169+04.89
RADIUS:	2,865.16'
DELTA:	16° 15' 47" (LT)
LENGTH:	813.25'
TANGENT LENGTH:	409.38'
CHORD BEARING:	S 20° 42' 09" E
CHORD DISTANCE:	810.53'
PI NORTHING:	13,756,678.73
PI EASTING:	3,218,091.28

5

BASELINE CURVE DATA:

PI STATION:	213+23.22
RADIUS:	5,730.32'
DELTA:	10° 17' 10" (RT)
LENGTH:	1,028.75'
TANGENT LENGTH:	515.76'
CHORD BEARING:	S 23° 41' 27" E
CHORD DISTANCE:	1,027.37'
PI NORTHING:	13,752,804.56
PI EASTING:	3,220,224.12

SCALE (FEET)

0 200 400 600

U.S. SURVEY FEET
22" x 34" SCALE: 1" = 200'
11" x 17" SCALE: 1" = 400'

THE SURVEY CONTROL INFORMATION HAS BEEN ACCEPTED AND INCORPORATED INTO THIS PSBE

STATE OF TEXAS
REGISTERED
JIBRAEL K. AHMAD
6183
PROFESSIONAL
LAND SURVEYOR
4/30/22

THE CONTROL POINTS SHOWN HEREIN WERE DETERMINED BY A SURVEY MADE ON THE GROUND UNDER MY SUPERVISION.

JONES|CARTER
2322 West Grand Parkway North, Suite 150
• Katy, Texas 77449 • 832.913.4000
Texas Board of Professional Engineers and Land Surveyors Registration No. 10046100

SURVEY CONTROL INDEX SHEET
FARM TO MARKET 270

2 OF 7

FED. RD. DIV. NO.	FEDERAL AID PROJECT		SHEET NO.
06			75
STATE	DIST.	COUNTY	
TEXAS	12	GALVESTON	
CONT.	SECT.	JOB	HIGHWAY
0912	73	215	FM 270, ETC

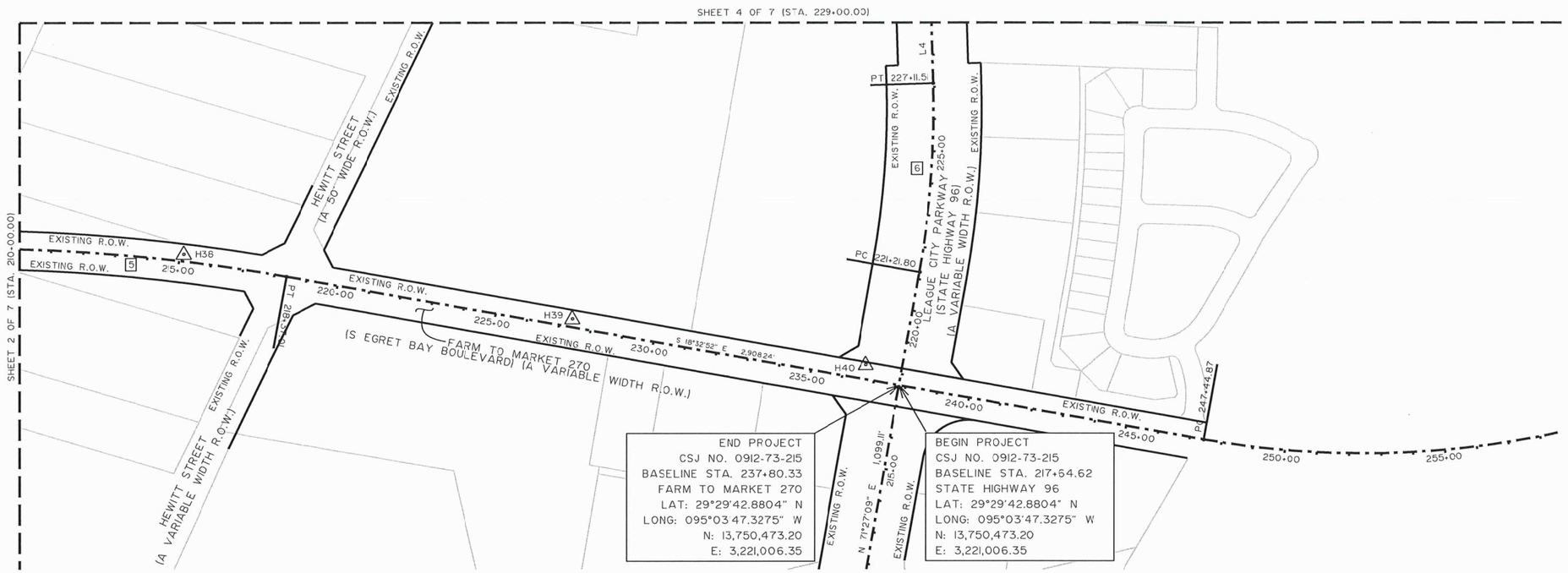

N

NOTES:

1. ALL BEARINGS ARE REFERENCED TO THE TEXAS COORDINATE SYSTEM OF 1983, SOUTH CENTRAL ZONE (NAD83, 2011 ADJUSTMENT, EPOCH 2010.00). ESTABLISHED BY GPS OBS (RTN), HELD HORIZONTAL MONUMENTS TXDOT LA MARQUE BASE STATION, TXDOT GALVESTON BASE STATION, TXDOT ANGLETON BASE STATION, TXAC, TXAU, TXGA, TXHE, TXLI, TXLM, TXOR AND TXWH.

2. ALL DISTANCES AND COORDINATES ARE IN US SURVEY FEET DISPLAYED IN SURFACE VALUES WITH THE TxDOT SURFACE ADJUSTMENT FACTOR OF 1.000130.

3. ALL ELEVATIONS ARE REFERENCED TO THE NORTH AMERICAN VERTICAL DATUM OF 1988 (NAVD88) USING GEOID12B. ESTABLISHED BY GPS OBS (RTN), HELD VERTICAL MONUMENTS TXAC, TXAU, TXGA, TXHE, TXLI, TXLM, TXOR AND TXWH. ESTABLISHED BY DIGITAL LEVELS HOLDING VERTICAL MONUMENT N09127302.

POINT INFO TABLE

POINT No.	LATITUDE (N)	LONGITUDE (W)	GRID NORTHING	GRID EASTING	SURFACE NORTHING	SURFACE EASTING	ELEVATION	DESCRIPTION
N09127301	29°31'26.7855"	095°05'02.1304"	13,758,952.92	3,213,630.32	13,760,741.58	3,214,048.09	2.40'	CP-3.25" TXDOT DISK IN CONC
N09127302	29°31'21.1157"	095°04'46.6572"	13,758,426.35	3,215,015.61	13,760,214.95	3,215,433.56	13.33'	CP-3.25" TXDOT DISK IN CONC
N09127303	29°32'16.5526"	095°04'07.0577"	13,764,677.68	3,234,213.01	13,766,467.09	3,234,633.46	-4.49'	CP-3.25" TXDOT DISK IN CONC
N09127304	29°32'09.4792"	095°04'15.2049"	13,763,939.16	3,233,918.12	13,765,728.47	3,233,938.46	11.72'	CP-3.25" TXDOT DISK IN CONC
H30	29°31'20.9851"	095°04'40.0390"	13,758,432.76	3,215,600.36	13,760,221.36	3,216,018.39	14.11'	CP-3.25" TXDOT DISK IN CONC
H31	29°31'23.1602"	095°04'35.6888"	13,758,665.22	3,215,977.06	13,760,453.85	3,216,395.14	3.67'	CP-3.25" TXDOT DISK IN CONC
H32	29°31'18.1133"	095°04'36.6894"	13,758,152.79	3,215,905.82	13,759,941.35	3,216,323.89	12.33'	CP-3.25" TXDOT DISK IN CONC
H33	29°31'07.3454"	095°04'25.5742"	13,757,098.74	3,216,923.68	13,758,887.17	3,217,341.86	16.32'	CP-3.25" TXDOT DISK IN CONC
H34	29°30'54.6844"	095°04'19.4213"	13,755,838.91	3,217,509.87	13,757,627.17	3,217,928.15	15.31'	CP-3.25" TXDOT DISK IN ASPHALT
H35	29°30'41.7716"	095°04'16.9419"	13,754,542.75	3,217,772.60	13,756,330.84	3,218,190.91	3.60'	CP-3.25" TXDOT DISK IN CONC
H36	29°30'29.8783"	095°04'08.4955"	13,753,367.24	3,218,558.77	13,755,155.17	3,218,977.18	7.04'	CP-3.25" TXDOT DISK IN CONC
H37	29°30'17.1827"	095°04'02.3815"	13,752,103.82	3,219,141.74	13,753,891.59	3,219,560.23	6.60'	CP-3.25" TXDOT DISK IN CONC
H38	29°30'04.4395"	095°03'54.5270"	13,750,840.79	3,219,878.62	13,752,628.40	3,220,297.21	20.75'	CP-3.25" TXDOT DISK IN ASPHALT
H39	29°29'52.8269"	095°03'50.4097"	13,749,680.76	3,220,284.68	13,751,468.22	3,220,700.31	9.54'	GPSE-MAGNAIL W/ SHINER
H40	29°29'44.0867"	095°03'47.2015"	13,748,808.02	3,220,594.70	13,750,595.36	3,221,013.38	6.79'	CP-3.25" TXDOT DISK IN CONC
H41	29°29'46.6705"	095°03'35.0957"	13,749,104.86	3,221,655.17	13,750,892.24	3,222,073.99	6.45'	GPSE-MAGNAIL W/ SHINER
H42	29°29'54.1160"	095°03'21.4259"	13,749,897.15	3,222,836.83	13,751,684.64	3,223,255.80	9.05'	CP-3.25" TXDOT DISK IN CONC
H43	29°29'56.1290"	095°03'05.9266"	13,750,146.57	3,224,198.69	13,751,934.08	3,224,617.84	21.23'	CP-3.25" TXDOT DISK IN CONC
H44	29°30'01.9524"	095°02'52.7520"	13,750,773.72	3,225,342.25	13,752,561.32	3,225,761.54	20.02'	GPSE-MAGNAIL W/ SHINER
H45	29°30'08.4409"	095°02'40.7555"	13,751,464.54	3,226,379.46	13,753,252.23	3,226,798.80	16.13'	CP-3.25" TXDOT DISK IN CONC
H46	29°30'16.3855"	095°02'33.4871"	13,752,288.23	3,226,994.15	13,754,076.03	3,227,413.66	17.51'	GPSE-MAGNAIL W/ SHINER
H47	29°30'25.6717"	095°02'20.6784"	13,753,263.94	3,228,093.44	13,755,051.86	3,228,513.09	6.54'	CP-3.25" TXDOT DISK IN CONC
H48	29°30'34.0649"	095°02'08.2828"	13,754,148.30	3,229,159.25	13,755,936.33	3,229,579.04	2.90'	CP-3.25" TXDOT DISK IN CONC
H49	29°30'44.0120"	095°01'58.2954"	13,755,182.32	3,230,007.06	13,756,970.50	3,230,426.96	15.28'	GPSE-MAGNAIL W/ SHINER
H50	29°30'51.0618"	095°01'44.3165"	13,755,936.50	3,231,216.96	13,757,724.78	3,231,637.02	11.38'	CP-3.25" TXDOT DISK IN CONC
H51	29°31'07.8399"	095°01'20.1612"	13,756,951.59	3,232,288.57	13,758,740.00	3,232,708.77	15.95'	CP-3.25" TXDOT DISK IN ASPHALT
H52	29°31'07.8399"	095°01'20.1612"	13,757,702.05	3,233,292.32	13,759,490.55	3,233,712.65	15.81'	CP-3.25" TXDOT DISK IN CONC
H53	29°31'17.5194"	095°01'09.3219"	13,758,711.73	3,234,216.05	13,760,500.37	3,234,636.50	15.94'	CP-3.25" TXDOT DISK IN ASPHALT
H54	29°31'24.3069"	095°00'58.6659"	13,759,428.94	3,235,133.41	13,761,217.67	3,235,553.98	17.36'	GPSE-MAGNAIL W/ SHINER
H55	29°31'30.7913"	095°00'48.6980"	13,760,113.51	3,235,991.21	13,761,902.33	3,236,411.89	18.13'	GPSE-MAGNAIL W/ SHINER
H56	29°31'34.7732"	095°00'40.1696"	13,760,541.61	3,236,730.43	13,762,330.03	3,237,150.20	17.91'	GPSE-MAGNAIL W/ SHINER
H20020013	29°28'59.7231"	095°02'49.7524"	13,744,500.89	3,225,819.53	13,746,287.68	3,226,238.89	16.29'	CP-3.25" TXCC STAMPED "H20020013"
H20020014	29°28'16.0594"	095°02'48.8359"	13,740,095.99	3,226,049.43	13,741,882.20	3,226,468.82	14.16'	CP-3.25" TXCC STAMPED "H20020014"
H-9	29°29'33.7534"	095°02'50.9413"	13,747,932.56	3,225,598.38	13,749,719.79	3,226,017.71	18.89'	CP-3.25" TXCC STAMPED "H-9"
H-21	29°29'54.8901"	094°59'42.7737"	13,750,631.73	3,242,142.75	13,752,419.31	3,242,564.23	13.51'	CP-3.25" TXCC STAMPED "H-21"
H-62	29°30'39.5339"	095°00'09.0692"	13,755,058.81	3,239,666.75	13,756,846.97	3,240,087.91	15.53'	CP-3.25" TXCC STAMPED "H-62"

TRAVERSE TABLE

FROM	TO	BEARING	DISTANCE
N09127301	N09127302	S 69°11'16" E	1,482.18'
N09127302	H30	N 89°22'19" E	584.87'
H30	H31	N 58°19'18" E	442.71'
H31	H32	S 07°54'53" W	517.43'
H32	H33	S 43°59'58" E	1,465.47'
H33	H34	S 24°57'08" E	1,389.72'
H34	H35	S 11°27'30" E	1,322.69'
H35	H36	S 33°46'26" E	1,414.36'
H36	H37	S 24°46'12" E	1,391.61'
H37	H38	S 30°15'38" E	1,462.46'
H38	H39	S 19°09'35" E	1,228.21'
H39	H40	S 19°43'53" E	927.31'
H40	H41	N 74°21'44" E	1,101.38'
H41	H42	N 56°09'30" E	1,422.67'
H42	H43	N 79°37'19" E	1,384.69'
H43	H44	N 61°15'30" E	1,304.41'
H44	H-9	S 05°09'05" E	2,853.05'
H-9	H20020013	S 03°41'14" E	3,439.23'
H20020013	H20020014	S 02°59'16" E	4,411.48'
H44	H45	N 55°20'06" E	1,246.38'
H45	H46	N 36°43'57" E	1,027.91'
H46	H47	N 48°24'30" E	1,470.03'
H47	H48	N 50°18'57" E	1,385.11'
H48	H49	N 39°20'54" E	1,337.34'
H49	H50	N 58°03'47" E	1,425.90'
H50	H51	N 46°33'06" E	1,476.25'
H51	H52	N 53°12'59" E	1,253.44'
H52	H53	N 42°27'16" E	1,368.66'
H53	H54	N 51°58'52" E	1,164.60'
H54	H55	N 51°24'29" E	1,097.62'
H55	H56	N 59°57'00" E	854.11'
H56	H-62	S 28°10'24" E	6,219.98'
H-62	H-21	S 29°13'03" E	5,073.10'
H56	N09127303	N 31°19'26" W	4,842.96'
N09127303	N09127304	S 43°15'23" W	1,014.18'

LEGEND:

CP CONTROL POINT
GPSE GPS MONUMENT EXISTING

LINE TABLE

POINT NO.	BEARING	DISTANCE
L4	N 59°40'58" E	994.62'

5

BASELINE CURVE DATA:

PI STATION:	213+25.19
RADIUS:	5,730.32'
DELTA:	10° 17' 10" (RT)
LENGTH:	1,028.75'
TANGENT LENGTH:	515.76'
CHORD BEARING:	S 23° 41' 27" E
CHORD DISTANCE:	1,027.37'
PI NORTHING:	13,752,804.56
PI EASTING:	3,220,224.12

6

BASELINE CURVE DATA:

PI STATION:	224+18.01
RADIUS:	2,871.11'
DELTA:	11° 46' 11" (LT)
LENGTH:	589.79'
TANGENT LENGTH:	295.94'
CHORD BEARING:	N 65° 34' 03" E
CHORD DISTANCE:	588.75'
PI NORTHING:	13,750,681.00
PI EASTING:	3,221,625.68

SCALE (FEET)
0 200 400 600
U.S. SURVEY FEET
22" x 34" SCALE: 1" = 200'
11" x 17" SCALE: 1" = 400'

THE SURVEY CONTROL INFORMATION HAS BEEN ACCEPTED AND INCORPORATED INTO THIS PSBE

STATE OF TEXAS REGISTERED JIBRAEL K. AHMAD 6183 PROFESSIONAL LAND SURVEYOR 6/30/22

THE CONTROL POINTS SHOWN HEREIN WERE DETERMINED BY A SURVEY MADE ON THE GROUND UNDER MY SUPERVISION.

JONES|CARTER
2322 West Grand Parkway North, Suite 150
• Katy, Texas 77449 • 832.913.4000
Texas Board of Professional Engineers and Land Surveyors Registration No. 10046100

SURVEY CONTROL INDEX SHEET
FM 270 & SH 96

3 OF 7

FED. RD. DIV. NO.	FEDERAL A/D PROJECT	SHEET NO.
06		76

STATE	DIST.	COUNTY	
TEXAS	12	GALVESTON	
CONT.	SECT.	JOB	HIGHWAY
0912	73	215	FM 270, ETC

N

NOTES:

1. ALL BEARINGS ARE REFERENCED TO THE TEXAS COORDINATE SYSTEM OF 1983, SOUTH CENTRAL ZONE (NAD83, 2011 ADJUSTMENT, EPOCH 2010.00). ESTABLISHED BY GPS OBS (RTN), HELD HORIZONTAL MONUMENTS TXDOT LA MARQUE BASE STATION, TXDOT GALVESTON BASE STATION, TXDOT ANGLETON BASE STATION, TXAC, TXAU, TXGA, TXHE, TXLI, TXLM, TXOR AND TXWH.

2. ALL DISTANCES AND COORDINATES ARE IN US SURVEY FEET DISPLAYED IN SURFACE VALUES WITH THE TxDOT SURFACE ADJUSTMENT FACTOR OF 1.000130.

3. ALL ELEVATIONS ARE REFERENCED TO THE NORTH AMERICAN VERTICAL DATUM OF 1988 (NAVD88) USING GEOID12B. ESTABLISHED BY GPS OBS (RTN), HELD VERTICAL MONUMENTS TXAC, TXAU, TXGA, TXHE, TXLI, TXLM, TXOR AND TXWH. ESTABLISHED BY DIGITAL LEVELS HOLDING VERTICAL MONUMENT N09127302.

THE SURVEY CONTROL INFORMATION HAS BEEN ACCEPTED AND INCORPORATED INTO THIS PS&E

STATE OF TEXAS REGISTERED JIBRAEL K. AHMAD 6183 PROFESSIONAL LAND SURVEYOR 06/30/22

THE CONTROL POINTS SHOWN HEREIN WERE DETERMINED BY A SURVEY MADE ON THE GROUND UNDER MY SUPERVISION.

POINT INFO TABLE

POINT No.	LATITUDE (N)	LONGITUDE (W)	GRID NORTHING	GRID EASTING	SURFACE NORTHING	SURFACE EASTING	ELEVATION	DESCRIPTION
N09127301	29°31'26.7855"	095°05'02.1304"	13,758,952.92	3,213,630.32	13,760,741.58	3,214,048.09	12.40'	CP-3.25" TXDOT DISK IN CONC
N09127302	29°31'21.1157"	095°04'46.6572"	13,758,426.35	3,215,015.61	13,760,214.95	3,215,433.56	13.33'	CP-3.25" TXDOT DISK IN CONC
N09127303	29°32'16.5526"	095°01'07.0577"	13,764,677.68	3,234,213.01	13,766,467.09	3,234,633.46	14.49'	CP-3.25" TXDOT DISK IN CONC
N09127304	29°32'09.4792"	095°01'15.2049"	13,763,939.16	3,233,518.12	13,765,728.47	3,233,938.48	11.72'	CP-3.25" TXDOT DISK IN CONC
H30	29°31'20.9851"	095°04'40.0390"	13,758,432.76	3,215,600.36	13,760,221.36	3,216,018.39	14.11'	CP-3.25" TXDOT DISK IN CONC
H31	29°31'23.1602"	095°04'35.6888"	13,758,665.22	3,215,977.06	13,760,453.85	3,216,395.14	13.67'	CP-3.25" TXDOT DISK IN CONC
H32	29°31'18.1133"	095°04'36.6894"	13,758,152.79	3,215,905.82	13,759,941.35	3,216,323.89	12.33'	CP-3.25" TXDOT DISK IN CONC
H33	29°31'07.3454"	095°04'25.5742"	13,757,098.74	3,216,923.68	13,758,887.17	3,217,341.88	16.32'	CP-3.25" TXDOT DISK IN CONC
H34	29°30'54.6844"	095°04'19.4213"	13,755,838.91	3,217,509.87	13,757,627.17	3,217,928.15	15.31'	CP-3.25" TXDOT DISK IN ASPHALT
H35	29°30'41.7716"	095°04'16.9419"	13,754,542.75	3,217,772.60	13,756,330.84	3,218,190.91	13.60'	CP-3.25" TXDOT DISK IN CONC
H36	29°30'29.8783"	095°04'08.4955"	13,753,367.24	3,218,558.77	13,755,155.17	3,218,977.18	17.04'	CP-3.25" TXDOT DISK IN CONC
H37	29°30'17.1827"	095°04'02.3815"	13,752,103.82	3,219,141.74	13,753,891.59	3,219,560.23	16.60'	CP-3.25" TXDOT DISK IN CONC
H38	29°30'04.4396"	095°03'54.5270"	13,750,840.79	3,219,878.62	13,752,628.40	3,220,297.21	20.75'	CP-3.25" TXDOT DISK IN ASPHALT
H39	29°29'52.8269"	095°03'50.4097"	13,749,680.76	3,220,281.68	13,751,468.22	3,220,700.31	19.54'	GPSE-MAGNAIL W/ SHINER
H40	29°29'44.0867"	095°03'47.2015"	13,748,808.02	3,220,594.70	13,750,595.36	3,221,013.38	16.79'	CP-3.25" TXDOT DISK IN CONC
H41	29°29'46.6705"	095°03'35.0937"	13,749,104.86	3,221,655.17	13,750,892.24	3,222,073.99	16.45'	GPSE-MAGNAIL W/ SHINER
H42	29°29'54.1160"	095°03'21.4259"	13,749,897.15	3,222,836.83	13,751,684.64	3,223,255.80	19.05'	CP-3.25" TXDOT DISK IN CONC
H43	29°29'56.1290"	095°03'05.9266"	13,750,146.57	3,224,198.69	13,751,934.08	3,224,617.84	21.23'	CP-3.25" TXDOT DISK IN CONC
H44	29°30'01.9524"	095°02'52.7520"	13,750,773.72	3,225,342.25	13,752,561.32	3,225,761.54	20.02'	GPSE-MAGNAIL W/ SHINER
H45	29°30'08.4409"	095°02'40.7555"	13,751,464.54	3,226,379.46	13,753,252.23	3,226,798.89	16.13'	CP-3.25" TXDOT DISK IN CONC
H46	29°30'16.3855"	095°02'33.4871"	13,752,288.23	3,226,994.15	13,754,076.03	3,227,413.66	17.51'	GPSE-MAGNAIL W/ SHINER
H47	29°30'25.6717"	095°02'20.6784"	13,753,263.94	3,228,093.44	13,755,051.86	3,228,513.09	16.54'	CP-3.25" TXDOT DISK IN CONC
H48	29°30'34.0649"	095°02'08.2828"	13,754,148.30	3,229,159.25	13,755,936.33	3,229,579.04	12.90'	CP-3.25" TXDOT DISK IN CONC
H49	29°30'44.0120"	095°01'58.2954"	13,755,182.32	3,230,007.06	13,756,970.50	3,230,426.96	15.28'	GPSE-MAGNAIL W/ SHINER
H50	29°30'51.0681"	095°01'44.3185"	13,755,936.50	3,231,216.96	13,757,724.78	3,231,637.02	11.38'	CP-3.25" TXDOT DISK IN CONC
H51	29°31'07.8399"	095°01'20.1612"	13,756,951.59	3,232,288.57	13,758,740.00	3,232,708.77	15.95'	CP-3.25" TXDOT DISK IN ASPHALT
H52	29°31'07.8399"	095°01'20.1612"	13,757,702.05	3,233,292.32	13,759,490.55	3,233,712.65	15.81'	CP-3.25" TXDOT DISK IN CONC
H53	29°31'17.5194"	095°01'09.3219"	13,758,711.73	3,234,216.05	13,760,500.37	3,234,636.50	15.94'	CP-3.25" TXDOT DISK IN ASPHALT
H54	29°31'24.3069"	095°00'58.6669"	13,759,428.94	3,235,133.41	13,761,217.67	3,235,553.98	17.36'	GPSE-MAGNAIL W/ SHINER
H55	29°31'30.7913"	095°00'48.6980"	13,760,113.51	3,235,991.21	13,761,902.33	3,236,411.89	18.13'	CP-3.25" TXDOT DISK IN CONC
H56	29°31'34.7732"	095°00'40.1696"	13,760,541.16	3,236,730.43	13,762,330.03	3,237,151.20	17.91'	GPSE-MAGNAIL W/ SHINER
H20020013	29°28'59.7231"	095°02'49.7524"	13,744,500.89	3,225,819.53	13,746,287.68	3,226,238.89	16.29'	CP-3.25" TACC STAMPED "H20020013"
H20020014	29°28'16.0594"	095°02'48.8369"	13,740,095.99	3,226,049.43	13,741,882.20	3,226,468.82	14.16'	CP-3.25" TACC STAMPED "H20020014"
H-9	29°29'33.7534"	095°02'50.9413"	13,747,932.56	3,225,598.38	13,749,719.79	3,226,017.71	18.89'	CP-3.25" TACC STAMPED "H-9"
H-21	29°29'54.8901"	094°59'42.7757"	13,750,631.73	3,242,142.75	13,752,419.31	3,242,564.23	13.51'	CP-3.25" TACC STAMPED "H-21"
H-62	29°30'39.5339"	095°00'09.0692"	13,755,056.81	3,239,666.75	13,756,846.97	3,240,087.91	15.53'	CP-3.25" TACC STAMPED "H-62"

TRAVERSE TABLE

FROM	TO	BEARING	DISTANCE
N09127301	N09127302	S 69°11'16" E	1,482.18'
N09127302	H30	N 89°22'19" E	584.87'
H30	H31	N 58°19'16" E	442.71'
H31	H32	S 07°54'53" W	517.43'
H32	H33	S 43°59'58" E	1,465.47'
H33	H34	S 24°57'08" E	1,389.72'
H34	H35	S 11°27'30" E	1,322.69'
H35	H36	S 33°46'26" E	1,414.36'
H36	H37	S 24°46'12" E	1,391.61'
H37	H38	S 30°15'38" E	1,462.46'
H38	H39	S 19°09'35" E	1,228.21'
H39	H40	S 19°43'53" E	927.31'
H40	H41	N 74°21'44" E	1,101.38'
H41	H42	N 56°09'30" E	1,422.87'
H42	H43	N 79°37'19" E	1,384.69'
H43	H44	N 61°15'30" E	1,304.41'
H44	H-9	S 05°09'05" E	2,853.05
H-9	H20020013	S 03°41'14" E	3,439.23
H20020013	H20020014	S 02°59'16" E	4,411.48'
H44	H45	N 56°20'06" E	1,246.38'
H45	H46	N 36°43'57" E	1,027.91'
H46	H47	N 48°24'30" E	1,470.03'
H47	H48	N 50°18'57" E	1,385.11'
H48	H49	N 39°20'54" E	1,337.34'
H49	H50	N 58°03'47" E	1,425.90'
H50	H51	N 46°33'06" E	1,476.25'
H51	H52	N 53°12'59" E	1,253.44'
H52	H53	N 42°27'16" E	1,368.66'
H53	H54	N 51°58'52" E	1,164.60'
H54	H55	N 51°24'29" E	1,097.62'
H55	H56	N 59°57'00" E	854.11'
H56	H-62	S 28°10'24" E	6,219.98'
H-62	H-21	S 29°13'03" E	5,073.10'
H56	N09127303	N 31°19'26" W	4,842.96'
N09127303	N09127304	S 43°15'23" W	1,014.18'

LEGEND:

CP CONTROL POINT
GPSE GPS MONUMENT EXISTING

LINE TABLE

POINT NO.	BEARING	DISTANCE
L5	N 47°38'22" E	381.82'

7

BASELINE CURVE DATA:

PI STATION:	244+26.18
RADIUS:	4,921.90'
DELTA:	16° 38' 17" (RT)
LENGTH:	1,429.27'
TANGENT LENGTH:	719.70'
CHORD BEARING:	N 68° 00' 06" E
CHORD DISTANCE:	1,424.26'
PI NORTHING:	13,751,695.75
PI EASTING:	3,223,361.01

8

BASELINE CURVE DATA:

PI STATION:	266+95.10
RADIUS:	3,937.52'
DELTA:	28° 40' 53" (LT)
LENGTH:	1,971.06'
TANGENT LENGTH:	1,006.64'
CHORD BEARING:	N 61° 58' 48" E
CHORD DISTANCE:	1,950.54'
PI NORTHING:	13,752,234.71
PI EASTING:	3,225,575.42

SCALE (FEET)
0 200 400 600
U.S. SURVEY FEET
22" x 34" SCALE: 1" = 200'
11" x 17" SCALE: 1" = 400'

JONES|CARTER
2322 West Grand Parkway North, Suite 150
• Katy, Texas 77449 • 832.913.4000
Texas Board of Professional Engineers and Land Surveyors Registration No. 10046100

SURVEY CONTROL
INDEX SHEET
STATE HIGHWAY 96
4 OF 7

FED. RD. DIV. NO.	FEDERAL AID PROJECT	SHEET NO.
06		77

STATE	DIST.	COUNTY	
TEXAS	12	GALVESTON	
CONT.	SECT.	JOB	HIGHWAY
0912	73	215	FM 270, ETC

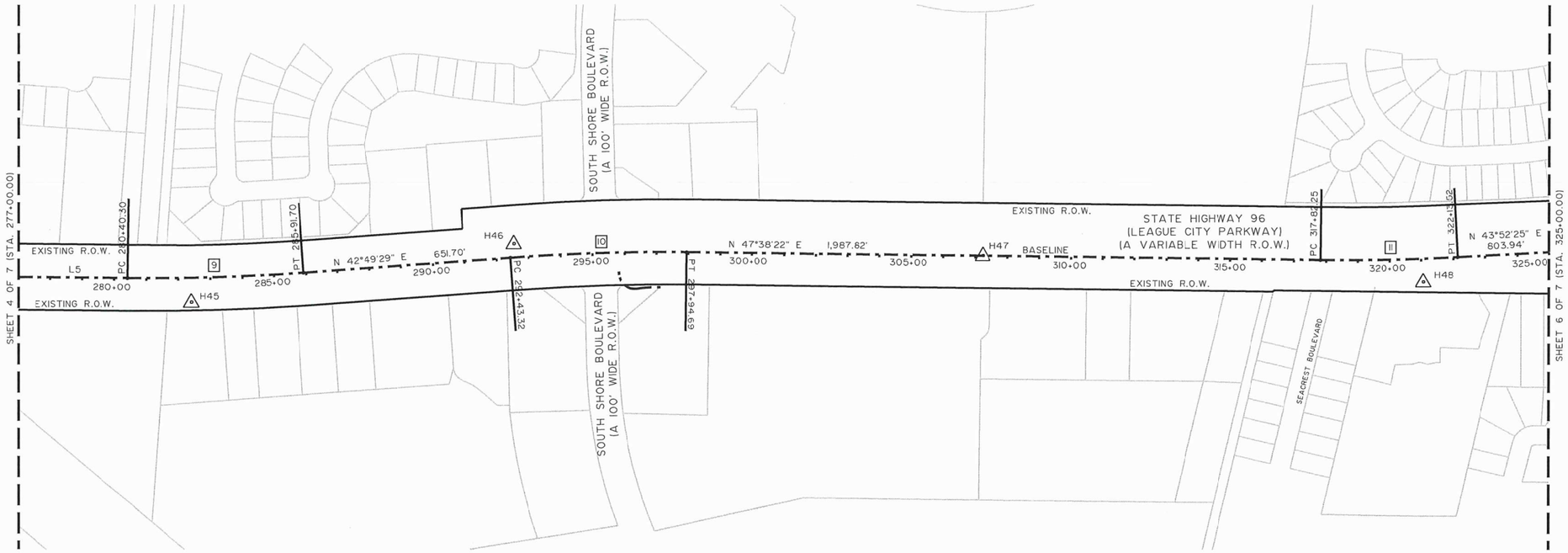

NOTES:

1. ALL BEARINGS ARE REFERENCED TO THE TEXAS COORDINATE SYSTEM OF 1983, SOUTH CENTRAL ZONE (NAD83, 2011 ADJUSTMENT, EPOCH 2010.00). ESTABLISHED BY GPS OBS (RTN), HELD HORIZONTAL MONUMENTS TXDOT LA MARQUE BASE STATION, TXDOT GALVESTON BASE STATION, TXDOT ANGLETON BASE STATION, TXAC, TXAU, TXGA, TXHE, TXLI, TXLM, TXOR AND TXWH.

2. ALL DISTANCES AND COORDINATES ARE IN US SURVEY FEET DISPLAYED IN SURFACE VALUES WITH THE TxDOT SURFACE ADJUSTMENT FACTOR OF 1.000130.

3. ALL ELEVATIONS ARE REFERENCED TO THE NORTH AMERICAN VERTICAL DATUM OF 1988 (NAVD88) USING GEOID12B. ESTABLISHED BY GPS OBS (RTN), HELD VERTICAL MONUMENTS TXAC, TXAU, TXGA, TXHE, TXLI, TXLM, TXOR AND TXWH. ESTABLISHED BY DIGITAL LEVELS HOLDING VERTICAL MONUMENT N09127302.

POINT INFO TABLE

POINT No.	LATITUDE (N)	LONGITUDE (W)	GRID NORTHNG	GRID EASTING	SURFACE NORTHING	SURFACE EASTING	ELEVATION	DESCRIPTION
N09127301	29°31'26.7855"	095°05'02.1304"	13,758,952.92	3,213,630.32	13,760,741.58	3,214,048.09	12.40'	CP-3.25" TXDOT DISK IN CONC
N09127302	29°31'21.1157"	095°04'46.6572"	13,758,426.35	3,215,015.61	13,760,214.95	3,215,433.56	13.33'	CP-3.25" TXDOT DISK IN CONC
N09127303	29°32'16.5526"	095°01'07.0577"	13,764,677.68	3,234,213.01	13,766,467.09	3,234,633.46	14.49'	CP-3.25" TXDOT DISK IN CONC
N09127304	29°32'09.4792"	095°01'15.2049"	13,763,939.16	3,233,518.12	13,765,728.47	3,233,938.48	11.72'	CP-3.25" TXDOT DISK IN CONC
H30	29°31'20.985"	095°04'40.0390"	13,758,432.76	3,215,600.36	13,760,221.36	3,216,018.39	14.11'	CP-3.25" TXDOT DISK IN CONC
H31	29°31'23.1602"	095°04'35.6888"	13,758,665.22	3,215,977.06	13,760,453.85	3,216,395.14	13.67'	CP-3.25" TXDOT DISK IN CONC
H32	29°31'18.1133"	095°04'36.6894"	13,758,152.79	3,215,905.82	13,759,941.35	3,216,323.89	12.33'	CP-3.25" TXDOT DISK IN CONC
H33	29°31'07.3454"	095°04'25.5742"	13,757,098.74	3,216,923.68	13,758,887.17	3,217,341.88	16.32'	CP-3.25" TXDOT DISK IN CONC
H34	29°30'54.6844"	095°04'19.4213"	13,755,838.91	3,217,509.87	13,757,627.17	3,217,928.15	15.31'	CP-3.25" TXDOT DISK IN ASPHALT
H35	29°30'41.7716"	095°04'16.9419"	13,754,542.75	3,217,772.60	13,756,330.84	3,218,190.91	13.60'	CP-3.25" TXDOT DISK IN CONC
H36	29°30'29.8783"	095°04'08.4955"	13,753,367.24	3,218,558.77	13,755,155.17	3,218,977.18	17.04'	CP-3.25" TXDOT DISK IN CONC
H37	29°30'17.1827"	095°04'02.3855"	13,752,103.62	3,219,141.74	13,753,891.59	3,219,560.23	15.60'	CP-3.25" TXDOT DISK IN CONC
H38	29°30'04.4396"	095°03'54.5270"	13,750,840.79	3,219,878.62	13,752,628.40	3,220,297.21	20.75'	CP-3.25" TXDOT DISK IN ASPHALT
H39	29°29'52.8269"	095°03'50.4097"	13,749,680.76	3,220,281.68	13,751,468.22	3,220,700.31	19.54'	GPSE-MAGNAIL W/ SHINER
H40	29°29'44.0867"	095°03'47.2015"	13,748,808.02	3,220,594.70	13,750,595.36	3,221,013.38	16.79'	CP-3.25" TXDOT DISK IN CONC
H41	29°29'46.6705"	095°03'35.0937"	13,749,104.46	3,221,655.17	13,750,892.24	3,222,073.99	16.45'	GPSE-MAGNAIL W/ SHINER
H42	29°29'56.1160"	095°03'21.4259"	13,749,897.5	3,222,836.83	13,751,684.64	3,223,255.80	19.05'	CP-3.25" TXDOT DISK IN CONC
H43	29°29'56.1290"	095°03'05.9266"	13,750,146.57	3,224,198.69	13,751,934.08	3,224,617.84	21.23'	CP-3.25" TXDOT DISK IN CONC
H44	29°30'01.9524"	095°02'52.7520"	13,750,773.72	3,225,342.25	13,752,561.32	3,225,761.54	20.02'	GPSE-MAGNAIL W/ SHINER
H45	29°30'08.4409"	095°02'40.7555"	13,751,464.54	3,226,379.46	13,753,252.23	3,226,798.89	16.13'	CP-3.25" TXDOT DISK IN CONC
H46	29°30'16.3855"	095°02'33.4871"	13,752,288.23	3,226,994.15	13,754,076.03	3,227,413.66	17.51'	GPSE-MAGNAIL W/ SHINER
H47	29°30'25.6717"	095°02'20.6784"	13,753,263.94	3,228,093.46	13,755,051.86	3,228,513.09	16.54'	CP-3.25" TXDOT DISK IN CONC
H48	29°30'34.0649"	095°02'08.2828"	13,754,148.30	3,229,159.25	13,755,936.33	3,229,579.04	12.90'	CP-3.25" TXDOT DISK IN CONC
H49	29°30'44.0120"	095°01'58.2954"	13,755,182.32	3,230,007.06	13,756,970.50	3,230,426.96	15.28'	GPSE-MAGNAIL W/ SHINER
H50	29°30'51.0681"	095°01'44.3185"	13,755,936.50	3,231,216.96	13,757,724.78	3,231,637.02	11.38'	CP-3.25" TXDOT DISK IN CONC
H51	29°31'07.8399"	095°01'20.1612"	13,756,951.59	3,232,288.57	13,758,740.00	3,232,708.77	15.99'	CP-3.25" TXDOT DISK IN ASPHALT
H52	29°31'07.8399"	095°01'20.1612"	13,757,702.05	3,233,292.32	13,759,490.55	3,233,712.65	15.81'	CP-3.25" TXDOT DISK IN CONC
H53	29°31'17.5194"	095°01'09.3219"	13,758,711.73	3,234,216.05	13,760,500.37	3,234,636.50	15.94'	CP-3.25" TXDOT DISK IN ASPHALT
H54	29°31'24.3069"	095°00'58.6669"	13,759,428.94	3,235,133.41	13,761,217.67	3,235,553.98	17.36'	GPSE-MAGNAIL W/ SHINER
H55	29°31'30.7913"	095°00'48.6980"	13,760,111.51	3,235,991.21	13,761,902.33	3,236,411.89	18.13'	CP-3.25" TXDOT DISK IN CONC
H56	29°31'34.7732"	095°00'40.1696"	13,760,541.16	3,236,730.43	13,762,330.03	3,237,150.20	17.91'	GPSE-MAGNAIL W/ SHINER
H20020013	29°28'59.7231"	095°02'49.7524"	13,744,500.89	3,225,889.53	13,746,287.68	3,226,238.89	16.29'	CP-3.25" TXCC STAMPED "H20020013"
H20020014	29°28'16.0594"	095°02'48.8369"	13,740,995.99	3,226,049.43	13,741,882.20	3,226,468.82	4.16'	CP-3.25" TXCC STAMPED "H20020014"
H-9	29°29'33.7534"	095°02'50.9413"	13,747,932.56	3,225,598.38	13,749,719.79	3,226,017.71	18.89'	CP-3.25" TXCC STAMPED "H-9"
H-21	29°29'54.8910"	094°59'42.7757"	13,750,631.73	3,242,162.75	13,752,419.31	3,242,564.23	13.51'	CP-3.25" TXCC STAMPED "H-21"
H-62	29°30'39.5339"	095°00'09.0692"	13,755,058.81	3,239,666.75	13,756,846.97	3,240,087.91	15.53'	CP-3.25" TXCC STAMPED "H-62"

TRAVERSE TABLE

FROM	TO	BEARING	DISTANCE
N09127301	N09127302	S 69°11'16" E	1,482.18'
N09127302	H30	N 89°22'19" E	584.87'
H30	H31	N 58°19'18" E	442.71'
H31	H32	S 07°54'53" W	517.43'
H32	H33	S 43°59'58" E	1,465.47'
H33	H34	S 24°57'08" E	1,389.72'
H34	H35	S 11°27'30" E	1,322.69'
H35	H36	S 33°46'26" E	1,414.36'
H36	H37	S 24°46'12" E	1,391.61'
H37	H38	S 30°15'38" E	1,462.46'
H38	H39	S 19°09'35" E	1,228.21'
H39	H40	S 19°43'53" E	927.31'
H40	H41	N 74°21'44" E	1101.38'
H41	H42	N 56°09'30" E	1,422.87'
H42	H43	N 79°37'19" E	1,384.69'
H43	H44	N 61°15'30" E	1,304.41'
H44	H-9	S 05°09'05" E	2,853.05'
H-9	H20020013	S 03°41'14" E	3,439.23'
H20020013	H20020014	S 02°59'16" E	4,411.48'
H44	H45	N 56°20'06" E	1,246.38'
H45	H46	N 36°43'57" E	1,027.91'
H46	H47	N 43°24'30" E	1,470.03'
H47	H48	N 50°18'57" E	1,385.11'
H48	H49	N 39°20'54" E	1,337.34'
H49	H50	N 58°03'47" E	1,425.90'
H50	H51	N 46°33'06" E	1,476.25'
H51	H52	N 53°12'29" E	1,253.44'
H52	H53	N 42°27'16" E	1,368.66'
H53	H54	N 51°58'52" E	1,164.60'
H54	H55	N 54°24'29" E	1,097.62'
H55	H56	N 59°57'00" E	854.11'
H56	H-62	S 28°10'24" E	6,219.98'
H-62	H-21	S 29°13'03" E	5,073.10'
H56	N09127303	N 31°19'26" W	4,842.96'
N09127303	N09127304	S 43°15'23" W	1,014.18'

LEGEND:

CP CONTROL POINT
GPSE GPS MONUMENT EXISTING

LINE TABLE

POINT NO.	BEARING	DISTANCE
L5	N 47°38'22" E	381.82'

9

BASELINE CURVE DATA:

PI STATION:	283+17.24
RADIUS:	6,562.53'
DELTA:	04° 48' 53" (LT)
LENGTH:	551.47'
TANGENT LENGTH:	275.90'
CHORD BEARING:	N 45° 13' 56" E
CHORD DISTANCE:	551.31'
PI NORTHING:	13,753,356.14
PI EASTING:	3,226,805.25

10

BASELINE CURVE DATA:

PI STATION:	295+20.40
RADIUS:	6,562.53'
DELTA:	04° 48' 52" (RT)
LENGTH:	551.44'
TANGENT LENGTH:	275.88'
CHORD BEARING:	N 45° 13' 55" E
CHORD DISTANCE:	551.28'
PI NORTHING:	13,754,238.82
PI EASTING:	3,227,623.33

11

BASELINE CURVE DATA:

PI STATION:	319+99.52
RADIUS:	6,562.53'
DELTA:	03° 45' 57" (LT)
LENGTH:	431.33'
TANGENT LENGTH:	215.74'
CHORD BEARING:	N 45° 45' 23" E
CHORD DISTANCE:	431.25'
PI NORTHING:	13,755,909.46
PI EASTING:	3,229,455.44

SCALE (FEET)

0 200 400 600

U.S. SURVEY FEET
22" x 34" SCALE: 1" = 200'
11" x 17" SCALE: 1" = 400'

THE SURVEY CONTROL INFORMATION HAS BEEN ACCEPTED AND INCORPORATED INTO THIS PSBE

STATE OF TEXAS REGISTERED JIBRAEL K. AHMAD 5183 PROFESSIONAL LAND SURVEYOR 06/30/22

THE CONTROL POINTS SHOWN HEREIN WERE DETERMINED BY A SURVEY MADE ON THE GROUND UNDER MY SUPERVISION.

JONES|CARTER
2322 West Grand Parkway North, Suite 150
• Katy, Texas 77449 • 832.913.4000
Texas Board of Professional Engineers and Land Surveyors Registration No. 10046100

SURVEY CONTROL INDEX SHEET
STATE HIGHWAY 96

5 OF 7

FED. RD. DIV. NO.	FEDERAL AID PROJECT	SHEET NO.
06		78

STATE	DIST.	COUNTY	
TEXAS	12	GALVESTON	
CONT.	SECT.	JOB	HIGHWAY
0912	73	215	FM 270, ETC

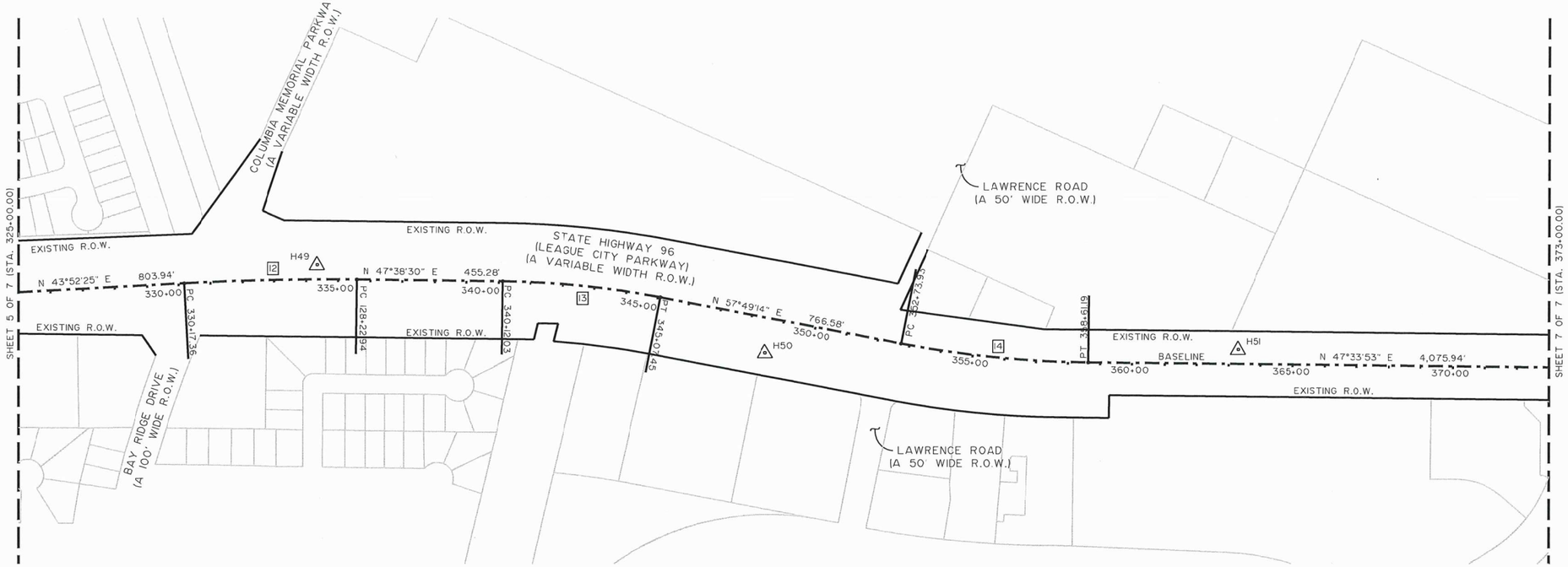

NOTES:

1. ALL BEARINGS ARE REFERENCED TO THE TEXAS COORDINATE SYSTEM OF 1983, SOUTH CENTRAL ZONE (NAD83, 2011 ADJUSTMENT, EPOCH 2010.00). ESTABLISHED BY GPS OBS (RTN), HELD HORIZONTAL MONUMENTS TXDOT LA MARQUE BASE STATION, TXDOT GALVESTON BASE STATION, TXDOT ANGLETON BASE STATION, TXAC, TXAU, TXGA, TXHE, TXLI, TXLM, TXOR AND TXWH.

2. ALL DISTANCES AND COORDINATES ARE IN US SURVEY FEET DISPLAYED IN SURFACE VALUES WITH THE TxDOT SURFACE ADJUSTMENT FACTOR OF 1.000130.

3. ALL ELEVATIONS ARE REFERENCED TO THE NORTH AMERICAN VERTICAL DATUM OF 1988 (NAVD88) USING GEOID12B. ESTABLISHED BY GPS OBS (RTN), HELD VERTICAL MONUMENTS TXAC, TXAU, TXGA, TXHE, TXLI, TXLM, TXOR AND TXWH. ESTABLISHED BY DIGITAL LEVELS HOLDING VERTICAL MONUMENT N09127302.

THE SURVEY CONTROL INFORMATION HAS BEEN ACCEPTED AND INCORPORATED INTO THIS PSBE

STATE OF TEXAS REGISTERED JIBRAEL K. AHMAD 6183 PROFESSIONAL LAND SURVEYOR 7/6/2022

THE CONTROL POINTS SHOWN HEREIN WERE DETERMINED BY A SURVEY MADE ON THE GROUND UNDER MY SUPERVISION.

POINT INFO TABLE

POINT No.	LATITUDE (N)	LONGITUDE (W)	GRID NORTHING	GRID EASTING	SURFACE NORTHING	SURFACE EASTING	ELEVATION	DESCRIPTION
N09127301	29°31'26.7855"	095°05'02.1304"	13,758,952.92	3,213,630.32	13,760,741.58	3,214,048.09	12.40'	CP-3.25" TXDOT DISK IN CONC
N09127302	29°31'21.8157"	095°04'46.6572"	13,758,426.35	3,215,015.61	13,760,214.96	3,215,433.56	13.33'	CP-3.25" TXDOT DISK IN CONC
N09127303	29°32'16.5526"	095°01'07.0577"	13,764,677.68	3,234,213.01	13,766,467.09	3,234,633.46	14.49'	CP-3.25" TXDOT DISK IN CONC
N09127304	29°32'09.4792"	095°01'15.2049"	13,763,939.16	3,233,598.12	13,765,728.47	3,233,938.48	11.72'	CP-3.25" TXDOT DISK IN CONC
H30	29°31'20.9851"	095°04'40.0390"	13,758,432.76	3,215,600.36	13,760,221.36	3,216,018.39	14.11'	CP-3.25" TXDOT DISK IN CONC
H31	29°31'23.1602"	095°04'35.6888"	13,758,665.22	3,215,977.06	13,760,453.85	3,216,395.14	13.67'	CP-3.25" TXDOT DISK IN CONC
H32	29°31'18.1133"	095°04'36.6894"	13,758,152.79	3,215,905.82	13,759,941.35	3,216,323.89	12.33'	CP-3.25" TXDOT DISK IN CONC
H33	29°31'07.3454"	095°04'25.5742"	13,757,098.74	3,216,923.68	13,758,887.17	3,217,341.88	18.32'	CP-3.25" TXDOT DISK IN CONC
H34	29°30'54.6844"	095°04'19.4215"	13,755,838.91	3,217,509.87	13,757,627.17	3,217,928.15	15.31'	CP-3.25" TXDOT DISK IN ASPHALT
H35	29°30'41.7716"	095°04'16.9413"	13,754,542.75	3,217,772.60	13,756,330.84	3,218,190.91	13.60'	CP-3.25" TXDOT DISK IN CONC
H36	29°30'29.8783"	095°04'08.4955"	13,753,367.24	3,218,558.77	13,755,155.17	3,218,977.18	17.04'	CP-3.25" TXDOT DISK IN CONC
H37	29°30'17.1827"	095°04'02.3185"	13,752,103.82	3,219,141.74	13,753,891.59	3,219,560.23	16.60'	CP-3.25" TXDOT DISK IN CONC
H38	29°30'04.4396"	095°03'54.5270"	13,750,840.79	3,219,878.62	13,752,628.40	3,220,297.21	20.75'	CP-3.25" TXDOT DISK IN ASPHALT
H39	29°29'52.8269"	095°03'50.4097"	13,749,680.76	3,220,281.68	13,751,468.22	3,220,700.31	19.54'	GPSE-MAGNAIL W/ SHINER
H40	29°29'44.0867"	095°03'47.2015"	13,748,808.02	3,220,594.70	13,750,595.36	3,221,013.38	15.79'	CP-3.25" TXDOT DISK IN CONC
H41	29°29'46.6705"	095°03'35.0937"	13,749,104.66	3,221,655.17	13,750,892.24	3,222,073.99	15.45'	GPSE-MAGNAIL W/ SHINER
H42	29°29'54.1160"	095°03'21.4259"	13,749,897.15	3,222,836.83	13,751,684.64	3,223,255.80	19.05'	CP-3.25" TXDOT DISK IN CONC
H43	29°29'56.1290"	095°03'05.9266"	13,750,146.57	3,224,179.69	13,751,934.08	3,224,617.84	21.23'	CP-3.25" TXDOT DISK IN CONC
H44	29°30'01.9524"	095°02'52.7520"	13,750,773.72	3,225,342.25	13,752,561.32	3,225,761.54	20.02'	GPSE-MAGNAIL W/ SHINER
H45	29°30'08.4409"	095°02'40.7555"	13,751,464.54	3,226,379.46	13,753,252.23	3,226,798.89	16.13'	CP-3.25" TXDOT DISK IN CONC
H46	29°30'16.3855"	095°02'33.4871"	13,752,288.23	3,226,994.15	13,754,076.03	3,227,413.66	17.51'	GPSE-MAGNAIL W/ SHINER
H47	29°30'25.6717"	095°02'20.6764"	13,753,263.94	3,228,093.44	13,755,051.86	3,228,513.09	16.54'	CP-3.25" TXDOT DISK IN CONC
H48	29°30'34.0649"	095°02'08.2828"	13,754,148.30	3,229,159.25	13,755,936.33	3,229,579.04	12.90'	CP-3.25" TXDOT DISK IN CONC
H49	29°30'44.0120"	095°01'58.2954"	13,755,182.32	3,230,007.06	13,756,970.50	3,230,426.96	15.28'	GPSE-MAGNAIL W/ SHINER
H50	29°30'51.0681"	095°01'44.3185"	13,755,936.50	3,231,216.96	13,757,724.78	3,231,637.02	11.38'	CP-3.25" TXDOT DISK IN CONC
H51	29°31'07.8399"	095°01'20.1612"	13,756,951.59	3,232,288.57	13,758,740.00	3,232,708.77	15.95'	CP-3.25" TXDOT DISK IN ASPHALT
H52	29°31'07.8399"	095°01'20.1612"	13,757,702.05	3,233,292.32	13,759,490.55	3,233,712.65	15.81'	CP-3.25" TXDOT DISK IN CONC
H53	29°31'17.5941"	095°01'09.3219"	13,758,741.73	3,234,216.05	13,760,530.37	3,234,636.50	15.94'	CP-3.25" TXDOT DISK IN ASPHALT
H54	29°31'24.3069"	095°00'58.6669"	13,759,428.94	3,235,133.41	13,761,217.67	3,235,553.98	17.36'	GPSE-MAGNAIL W/ SHINER
H55	29°31'30.7913"	095°00'48.6980"	13,760,113.51	3,235,991.21	13,761,902.33	3,236,411.89	18.13'	CP-3.25" TXDOT DISK IN CONC
H56	29°31'34.7732"	095°00'40.1696"	13,760,541.16	3,236,730.43	13,762,330.03	3,237,151.20	17.91'	GPSE-MAGNAIL W/ SHINER
H20020013	29°28'59.7231"	095°02'49.7524"	13,744,500.89	3,225,819.53	13,746,287.68	3,226,238.89	15.29'	CP-3.25" TXCC STAMPED "H20020013"
H20020014	29°28'16.0594"	095°02'48.8369"	13,740,095.99	3,226,049.43	13,741,882.20	3,226,468.82	14.16'	CP-3.25" TXCC STAMPED "H20020014"
H-9	29°29'33.7534"	095°02'50.9413"	13,747,932.56	3,225,598.38	13,749,719.79	3,226,017.71	13.89'	CP-3.25" TXCC STAMPED "H-9"
H-21	29°29'54.8901"	094°59'42.7757"	13,750,631.73	3,242,142.75	13,752,419.31	3,242,564.23	13.51'	CP-3.25" TXCC STAMPED "H-21"
H-62	29°30'39.5339"	095°00'09.0692"	13,755,058.81	3,239,666.75	13,756,846.97	3,240,087.91	15.53'	CP-3.25" TXCC STAMPED "H-62"

TRAVERSE TABLE

FROM	TO	BEARING	DISTANCE
N09127301	N09127302	S 69°11'16" E	1,482.18'
N09127302	H30	N 89°22'19" E	584.87'
H30	H31	N 58°19'18" E	442.71'
H31	H32	S 07°54'53" W	517.43'
H32	H33	S 43°59'58" E	1,465.47'
H33	H34	S 24°57'08" E	1,389.72'
H34	H35	S 11°27'30" E	1,322.69'
H35	H36	S 33°46'26" E	1,414.36'
H36	H37	S 24°46'12" E	1,391.61'
H37	H38	S 30°15'38" E	1,462.46'
H38	H39	S 19°09'35" E	1,228.21'
H39	H40	S 15°43'53" E	927.31'
H40	H41	N 74°21'44" E	1,101.38'
H41	H42	N 56°09'30" E	1,422.87'
H42	H43	N 79°37'19" E	1,384.69'
H43	H44	N 61°15'30" E	1,304.41'
H44	H-9	S 05°09'05" E	2,853.05'
H-9	H20020013	S 03°41'14" E	3,439.23'
H20020013	H20020014	S 02°59'16" E	4,411.48'
H44	H45	N 56°20'06" E	1,246.38'
H45	H46	N 36°43'57" E	1,027.91'
H46	H47	N 48°24'30" E	1,470.03'
H47	H48	N 50°18'57" E	1,385.11'
H48	H49	N 39°20'54" E	1,337.34'
H49	H50	N 58°03'47" E	1,425.90'
H50	H51	N 46°33'06" E	1,476.25'
H51	H52	N 53°12'59" E	1,253.44'
H52	H53	N 42°27'16" E	1,368.66'
H53	H54	N 5°58'52" E	1,164.60'
H54	H55	N 5°24'29" E	1,097.62'
H55	H56	N 59°57'00" E	854.11'
H56	H-62	S 28°10'24" E	6,219.98'
H-62	H-21	S 29°13'03" E	5,073.10'
H56	N09127303	N 31°9'26" W	4,842.96'
N09127303	N09127304	S 43°15'23" W	1,014.18'

LEGEND:

CP CONTROL POINT
GPSE GPS MONUMENT EXISTING

12

BASELINE CURVE DATA:

PI STATION:	332+88.91
RADIUS:	8,203.17'
DELTA:	03° 46' 06" (RT)
LENGTH:	539.52'
TANGENT LENGTH:	269.85'
CHORD BEARING:	N 45° 45' 28" E
CHORD DISTANCE:	539.42'
PI NORTHING:	13,756,839.05
PI EASTING:	3,230,349.18

13

BASELINE CURVE DATA:

PI STATION:	342+62.24
RADIUS:	2,789.08'
DELTA:	10° 10' 44" (RT)
LENGTH:	495.49'
TANGENT LENGTH:	248.40'
CHORD BEARING:	N 52° 43' 52" E
CHORD DISTANCE:	494.84'
PI NORTHING:	13,757,494.98
PI EASTING:	3,231,068.57

14

BASELINE CURVE DATA:

PI STATION:	355+70.37
RADIUS:	3,281.27'
DELTA:	10° 15' 21" (LT)
LENGTH:	587.34'
TANGENT LENGTH:	294.46'
CHORD BEARING:	N 52° 41' 33" E
CHORD DISTANCE:	586.56'
PI NORTHING:	13,758,192.35
PI EASTING:	3,232,176.85

SCALE (FEET)
0 200 400 600
U.S. SURVEY FEET
22" x 34" SCALE: 1" = 200'
11" x 17" SCALE: 1" = 400'

JONES|CARTER
2322 West Grand Parkway North, Suite 150
• Katy, Texas 77449 • 832.913.4000
Texas Board of Professional Engineers and Land Surveyors Registration No. 10046100

SURVEY CONTROL INDEX SHEET
STATE HIGHWAY 96

6 OF 7

FED. RD. DIV. NO.	FEDERAL AID PROJECT	SHEET NO.
06		79

STATE	DIST.	COUNTY
TEXAS	12	GALVESTON

CONT.	SECT.	JOB	HIGHWAY
0912	73	215	FM 270, ETC

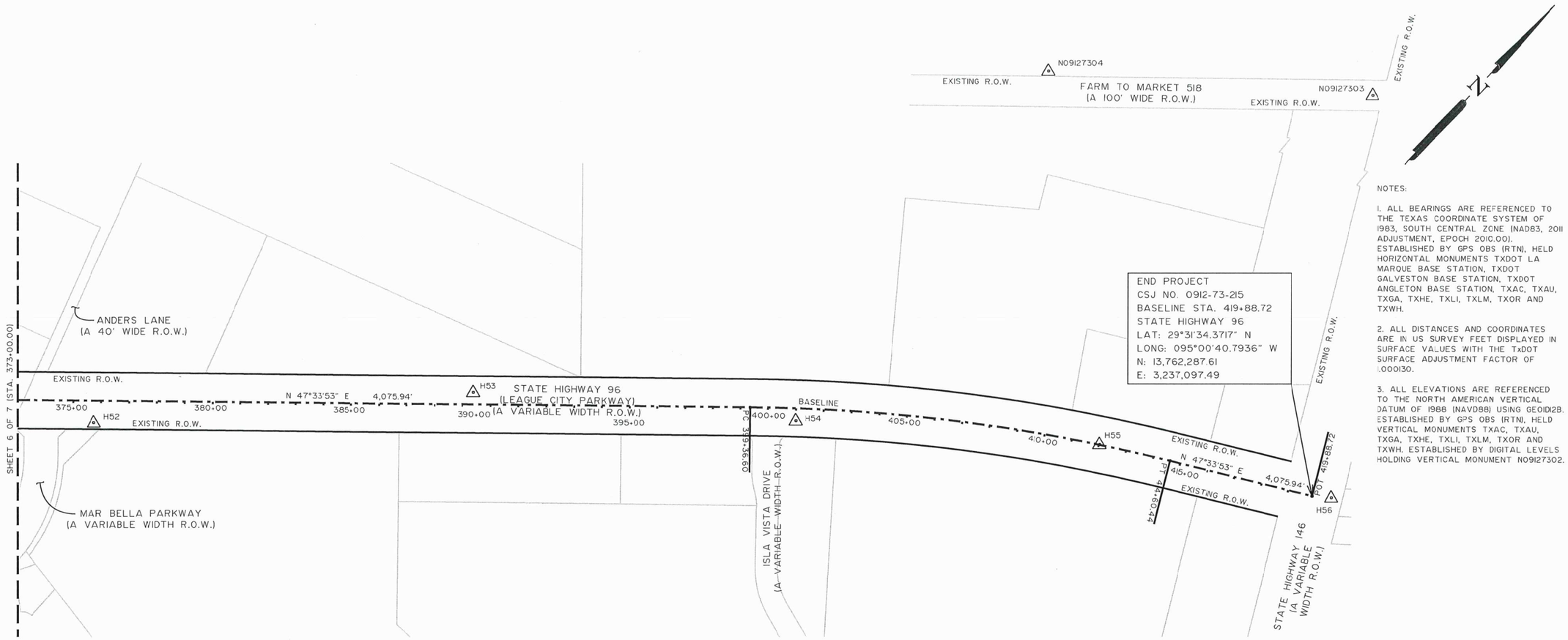

NOTES:

1. ALL BEARINGS ARE REFERENCED TO THE TEXAS COORDINATE SYSTEM OF 1983, SOUTH CENTRAL ZONE (NAD83, 2011 ADJUSTMENT, EPOCH 2010.00). ESTABLISHED BY GPS OBS (RTN), HELD HORIZONTAL MONUMENTS TXDOT LA MARQUE BASE STATION, TXDOT GALVESTON BASE STATION, TXDOT ANGLETON BASE STATION, TXAC, TXAU, TXGA, TXHE, TXLI, TXLM, TXOR AND TXWH.

2. ALL DISTANCES AND COORDINATES ARE IN US SURVEY FEET DISPLAYED IN SURFACE VALUES WITH THE TxDOT SURFACE ADJUSTMENT FACTOR OF 1.000130.

3. ALL ELEVATIONS ARE REFERENCED TO THE NORTH AMERICAN VERTICAL DATUM OF 1988 (NAVD88) USING GEOID12B. ESTABLISHED BY GPS OBS (RTN), HELD VERTICAL MONUMENTS TXAC, TXAU, TXGA, TXHE, TXLI, TXLM, TXOR AND TXWH. ESTABLISHED BY DIGITAL LEVELS HOLDING VERTICAL MONUMENT N09127302.

POINT INFO TABLE

POINT No.	LATITUDE (N)	LONGITUDE (W)	GRID NORTHING	GRID EASTING	SURFACE NORTHING	SURFACE EASTING	ELEVATION	DESCRIPTION
N09127301	29°31'26.7855"	095°05'02.1304"	13,758,952.92	3,213,630.32	13,760,741.58	3,214,048.09	12.40'	CP-3.25" TXDOT DISK IN CONC
N09127302	29°31'21.1157"	095°04'46.6572"	13,758,426.35	3,215,015.61	13,760,214.95	3,215,433.56	13.33'	CP-3.25" TXDOT DISK IN CONC
N09127303	29°32'16.5526"	095°10'07.0577"	13,764,677.68	3,234,213.01	13,766,467.09	3,234,633.46	14.49'	CP-3.25" TXDOT DISK IN CONC
N09127304	29°32'09.4792"	095°10'15.2049"	13,763,939.16	3,233,561.12	13,765,728.47	3,233,938.48	11.72'	CP-3.25" TXDOT DISK IN CONC
H30	29°31'20.9851"	095°04'40.0390"	13,758,432.76	3,215,600.36	13,760,221.36	3,216,018.39	14.11'	CP-3.25" TXDOT DISK IN CONC
H31	29°31'23.1602"	095°04'35.6888"	13,758,665.22	3,215,977.06	13,760,453.85	3,216,395.14	13.67'	CP-3.25" TXDOT DISK IN CONC
H32	29°31'18.1133"	095°04'36.6854"	13,758,152.79	3,215,905.82	13,759,941.35	3,216,323.89	12.33'	CP-3.25" TXDOT DISK IN CONC
H33	29°31'07.3454"	095°04'25.5742"	13,757,098.74	3,216,923.68	13,758,887.17	3,217,341.88	15.32'	CP-3.25" TXDOT DISK IN CONC
H34	29°30'54.6844"	095°04'19.4215"	13,755,838.91	3,217,509.87	13,757,627.17	3,217,928.15	15.31'	CP-3.25" TXDOT DISK IN ASPHALT
H35	29°30'41.7716"	095°04'16.9419"	13,754,542.75	3,217,772.60	13,756,330.84	3,218,190.91	13.60'	CP-3.25" TXDOT DISK IN CONC
H36	29°30'29.8783"	095°04'08.4955"	13,753,367.24	3,218,558.77	13,755,155.17	3,218,977.18	17.04'	CP-3.25" TXDOT DISK IN CONC
H37	29°30'17.1827"	095°04'02.3815"	13,752,103.82	3,219,141.74	13,753,891.59	3,219,560.23	16.60'	CP-3.25" TXDOT DISK IN CONC
H38	29°30'04.4396"	095°03'54.5270"	13,750,840.79	3,219,878.62	13,752,628.40	3,220,297.21	20.75'	CP-3.25" TXDOT DISK IN ASPHALT
H39	29°29'52.8265"	095°03'50.4097"	13,749,680.76	3,220,28.68	13,751,468.22	3,220,700.31	19.54'	GPSE-MAGNAIL W/ SHINER
H40	29°29'44.0867"	095°03'47.2095"	13,748,808.02	3,220,594.70	13,750,595.36	3,221,013.38	15.79'	CP-3.25" TXDOT DISK IN CONC
H41	29°29'46.6705"	095°03'35.0937"	13,749,104.66	3,221,655.17	13,750,692.24	3,222,073.99	15.45'	GPSE-MAGNAIL W/ SHINER
H42	29°29'54.1160"	095°03'21.4259"	13,749,897.15	3,222,836.83	13,751,684.64	3,223,255.80	19.05'	CP-3.25" TXDOT DISK IN CONC
H43	29°29'56.1290"	095°03'05.9266"	13,750,146.57	3,224,198.69	13,751,934.08	3,224,617.84	21.23'	CP-3.25" TXDOT DISK IN CONC
H44	29°30'01.9524"	095°02'52.7520"	13,750,773.72	3,225,342.25	13,752,561.32	3,225,761.54	20.02'	GPSE-MAGNAIL W/ SHINER
H45	29°30'08.4409"	095°02'40.7355"	13,751,474.56	3,226,379.46	13,753,262.23	3,226,798.89	16.13'	CP-3.25" TXDOT DISK IN CONC
H46	29°30'16.3855"	095°02'33.4871"	13,752,288.23	3,226,994.15	13,754,076.03	3,227,413.66	17.51'	GPSE-MAGNAIL W/ SHINER
H47	29°30'25.6717"	095°02'20.6764"	13,753,263.54	3,228,093.44	13,755,051.86	3,228,513.09	15.54'	CP-3.25" TXDOT DISK IN CONC
H48	29°30'34.0649"	095°02'08.2828"	13,754,148.30	3,229,159.25	13,755,936.33	3,229,579.04	12.90'	CP-3.25" TXDOT DISK IN CONC
H49	29°30'44.0120"	095°01'58.2954"	13,755,182.32	3,230,007.06	13,756,970.50	3,230,426.96	15.28'	GPSE-MAGNAIL W/ SHINER
H50	29°30'51.0681"	095°01'44.3185"	13,755,936.50	3,231,216.96	13,757,724.78	3,231,637.02	11.38'	CP-3.25" TXDOT DISK IN CONC
H51	29°31'07.8399"	095°01'20.1612"	13,756,959.59	3,232,288.57	13,758,740.00	3,232,708.77	15.95'	CP-3.25" TXDOT DISK IN ASPHALT
H52	29°31'07.8399"	095°01'20.1612"	13,757,702.05	3,233,292.32	13,759,490.55	3,233,712.65	5.81'	CP-3.25" TXDOT DISK IN CONC
H53	29°31'17.5194"	095°01'09.3219"	13,758,711.73	3,234,216.05	13,760,500.37	3,234,636.50	15.94'	CP-3.25" TXDOT DISK IN ASPHALT
H54	29°31'24.3069"	095°00'58.6669"	13,759,428.94	3,235,133.41	13,761,217.67	3,235,553.98	17.36'	GPSE-MAGNAIL W/ SHINER
H55	29°31'30.7913"	095°00'48.6980"	13,760,113.51	3,235,991.21	13,761,902.33	3,236,411.89	18.13'	CP-3.25" TXDOT DISK IN CONC
H56	29°31'34.7732"	095°00'40.1696"	13,760,541.16	3,236,730.43	13,762,330.03	3,237,150.20	17.91'	GPSE-MAGNAIL W/ SHINER
H20020013	29°28'59.7231"	095°02'49.7524"	13,744,500.89	3,225,819.53	13,746,287.66	3,226,238.89	15.29'	CP-3.25" TXCC STAMPED "H20020013"
H20020014	29°28'16.0594"	095°02'48.8369"	13,740,095.99	3,226,049.43	13,741,882.20	3,226,468.82	14.16'	CP-3.25" TXCC STAMPED "H20020014"
H-9	29°29'33.7534"	095°02'50.9413"	13,747,932.56	3,225,598.36	13,749,719.79	3,226,017.71	18.89'	CP-3.25" TXCC STAMPED "H-9"
H-21	29°29'54.8901"	094°59'42.7757"	13,750,631.73	3,242,162.75	13,752,419.31	3,242,564.23	3.51'	CP-3.25" TXCC STAMPED "H-21"
H-62	29°30'39.5339"	095°00'09.0692"	13,755,058.31	3,239,666.75	13,756,846.97	3,240,087.91	15.53'	CP-3.25" TXCC STAMPED "H-62"

TRAVERSE TABLE

FROM	TO	BEARING	DISTANCE
N09127301	N09127302	S 69°11'16" E	1,482.18'
N09127302	H30	N 89°22'19" E	584.87'
H30	H31	N 58°19'18" E	442.71'
H31	H32	S 07°54'53" W	97.43'
H32	H33	S 43°59'58" E	1,465.47'
H33	H34	S 24°57'08" E	1,389.72'
H34	H35	S 11°27'30" E	1,322.69'
H35	H36	S 33°46'26" E	1,414.36'
H36	H37	S 24°48'12" E	1,391.61'
H37	H38	S 30°15'38" E	1,462.46'
H38	H39	S 19°09'35" E	1228.21'
H39	H40	S 19°43'53" E	927.31'
H40	H41	N 74°21'44" E	1,101.38'
H41	H42	N 54°09'30" E	1,422.87'
H42	H43	N 79°37'19" E	1,384.69'
H43	H44	N 61°15'30" E	1,304.41'
H44	H-9	S 05°09'05" E	2,853.05'
H-9	H20020013	S 03°41'14" E	3,439.23'
H20020013	H20020014	S 02°59'16" E	4,411.48'
H44	H45	N 56°20'06" E	1,246.38'
H45	H46	N 36°43'57" E	1,027.91'
H46	H47	N 48°24'30" E	1,470.03'
H47	H48	N 50°18'57" E	1,385.11'
H48	H49	N 39°20'54" E	1,337.34'
H49	H50	N 58°03'47" E	1,425.90'
H50	H51	N 46°33'06" E	1,476.25'
H51	H52	N 53°12'59" E	1,253.44'
H52	H53	N 42°27'16" E	1,368.66'
H53	H54	N 5°58'52" E	1,64.60'
H54	H55	N 31°24'29" E	1,097.62'
H55	H56	N 59°57'00" E	854.11'
H56	H-62	S 28°10'24" E	6,219.98'
H-62	H-21	S 29°13'03" E	5073.10'
H56	N09127303	N 31°19'26" W	4,842.96'
N09127303	N09127304	S 43°15'23" W	1,014.18'

LEGEND:

CP CONTROL POINT
GPSE GPS MONUMENT EXISTING

12

BASELINE CURVE DATA:

PI STATION:	332+87.12
RADIUS:	8,203.17'
DELTA:	03° 06' 45" (RT)
LENGTH:	539.52'
TANGENT LENGTH:	269.85'
CHORD BEARING:	N 45° 45' 28" E
CHORD DISTANCE:	539.42'
PI NORTHING:	13,756,839.05
PI EASTING:	3,230,349.18

13

BASELINE CURVE DATA:

PI STATION:	342+59.90
RADIUS:	2,789.08'
DELTA:	10° 10' 44" (RT)
LENGTH:	495.49'
TANGENT LENGTH:	248.40'
CHORD BEARING:	N 52° 43' 52" E
CHORD DISTANCE:	494.84'
PI NORTHING:	13,757,494.98
PI EASTING:	3,231,068.57

14

BASELINE CURVE DATA:

PI STATION:	355+67.89
RADIUS:	3,281.27'
DELTA:	10° 15' 21" (LT)
LENGTH:	587.34'
TANGENT LENGTH:	294.46'
CHORD BEARING:	N 52° 41' 33" E
CHORD DISTANCE:	586.56'
PI NORTHING:	13,758,192.35
PI EASTING:	3,232,176.85

SCALE (FEET)

0 200 400 600

U.S. SURVEY FEET
22" x 34" SCALE: 1" = 200'
11" x 17" SCALE: 1" = 400'

THE SURVEY CONTROL INFORMATION HAS BEEN ACCEPTED AND INCORPORATED INTO THIS PSAE

STATE OF TEXAS
REGISTERED
JIBRAEL K. AHMAD
6183
PROFESSIONAL
LAND SURVEYOR
12/30/22

THE CONTROL POINTS SHOWN HEREIN WERE DETERMINED BY A SURVEY MADE ON THE GROUND UNDER MY SUPERVISION.

JONES|CARTER
2322 West Grand Parkway North, Suite 150
• Katy, Texas 77449 • 832.913.4000
Texas Board of Professional Engineers and Land Surveyors Registration No. 10046100

SURVEY CONTROL INDEX SHEET STATE HIGHWAY 96

7 OF 7

FED. RD. DIV. NO.	FEDERAL AID PROJECT	SHEET NO.
06		80

STATE	DIST.	COUNTY	
TEXAS	12	GALVESTON	
CONT.	SECT.	JOB	HIGHWAY
0912	73	215	FM 270, ETC

N09127301

N: 13,760,741.58
E: 3,214,048.09
ELEV: 12.40'

DESC: 5/8" IR W/ 3.25" TXDOT ALUMINUM DISK SET IN CONCRETE

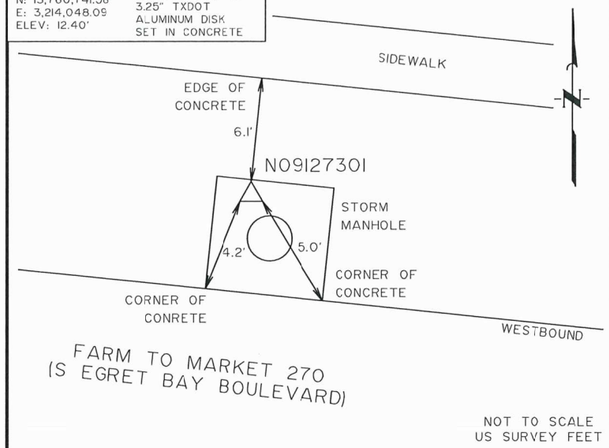

CONTROL POINT N09127301 IS A 3.25" TXDOT ALUMINUM DISK SET IN CONCRETE, ON THE NORTH SIDE OF FARM TO MARKET 270 (EGRET BAY BOULEVARD), LOCATED APPROXIMATELY 500' NORTHWEST OF BARGER STREET

N09127302

N: 13,760,214.95
E: 3,215,433.56
ELEV: 13.33'

DESC: 5/8" IR W/ 3.25" TXDOT ALUMINUM DISK SET IN CONCRETE

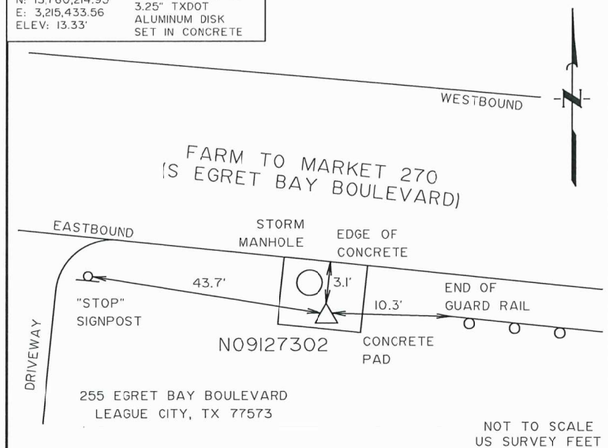

CONTROL POINT N09127302 IS A 3.25" TXDOT ALUMINUM DISK SET IN CONCRETE, ON THE SOUTH SIDE OF FARM TO MARKET 270 (S EGRET BAY BOULEVARD), LOCATED APPROXIMATELY 550' WEST OF FARM TO MARKET 518 (ACCESS ROAD)

N09127303

N: 13,766,467.09
E: 3,234,633.46
ELEV: 14.49'

DESC: 5/8" IR W/ 3.25" TXDOT ALUMINUM DISK SET IN CONCRETE

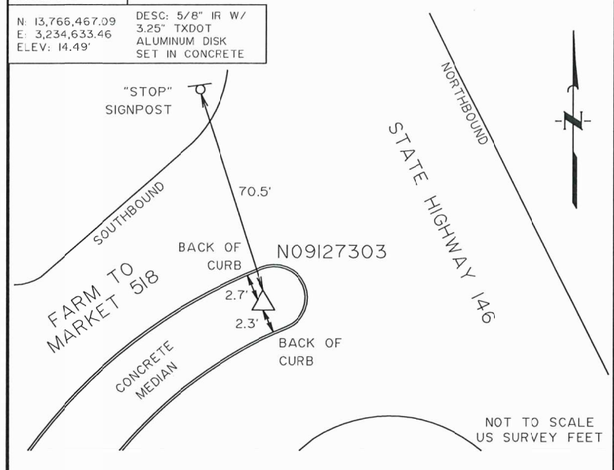

CONTROL POINT N09127303 IS A 3.25" TXDOT ALUMINUM DISK SET IN CONCRETE, IN THE MEDIAN AT THE INTERSECTION OF FARM TO MARKET 518 AND STATE HIGHWAY 146.

N09127304

N: 13,765,728.47
E: 3,233,938.48
ELEV: 11.72'

DESC: 5/8" IR W/ 3.25" TXDOT ALUMINUM DISK SET IN CONCRETE

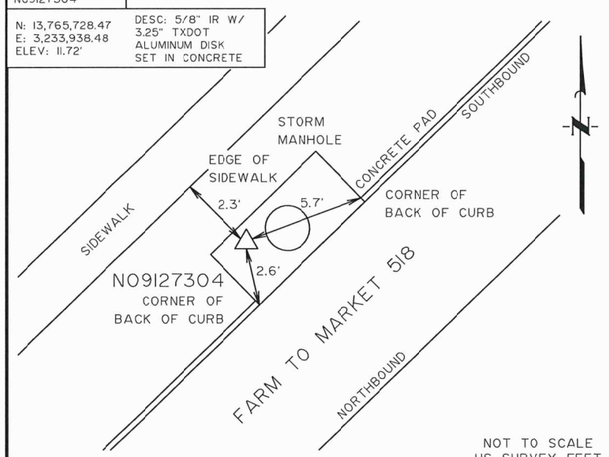

CONTROL POINT N09127304 IS A 3.25" TXDOT ALUMINUM DISK SET IN CONCRETE, ON THE NORTH SIDE OF FARM TO MARKET 518, LOCATED APPROXIMATELY 1,100' SOUTHWEST OF STATE HIGHWAY 146.

H30

N: 13,760,221.36
E: 3,216,018.39
ELEV: 14.11'

DESC: 5/8" IR W/ 3.25" TXDOT ALUMINUM DISK SET IN CONCRETE

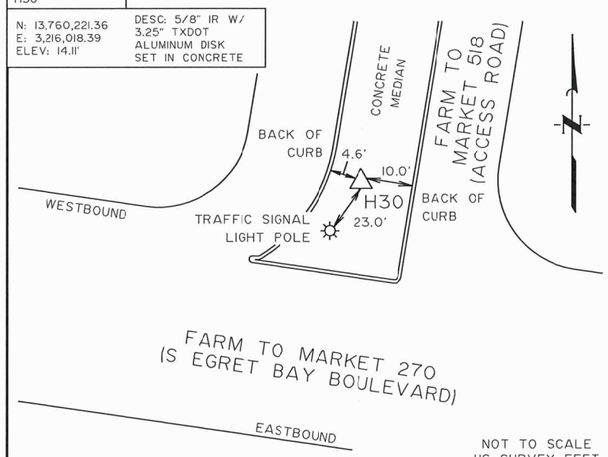

CONTROL POINT H30 IS A 3.25" TXDOT ALUMINUM DISK SET IN CONCRETE, IN THE MEDIAN AT THE INTERSECTION OF FARM TO MARKET 518 (ACCESS ROAD) AND FARM TO MARKET 270 (S EGRET BAY BOULEVARD).

H31

N: 13,760,453.85
E: 3,216,395.14
ELEV: 13.67'

DESC: 5/8" IR W/ 3.25" TXDOT ALUMINUM DISK SET IN CONCRETE

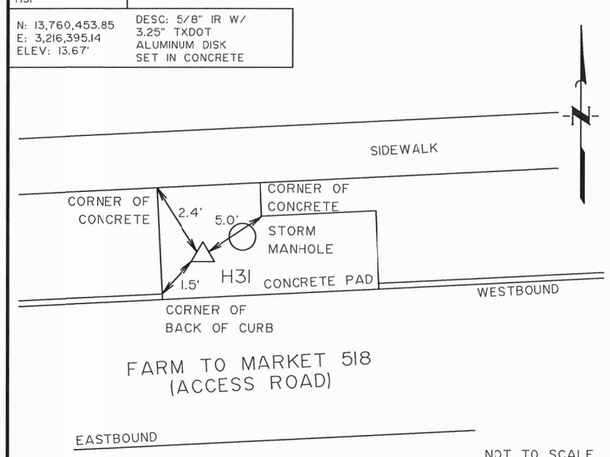

CONTROL POINT H31 IS A 3.25" TXDOT ALUMINUM DISK SET IN CONCRETE, ON THE NORTH SIDE OF FARM TO MARKET 518 (ACCESS ROAD), LOCATED APPROXIMATELY 80' WEST OF FARM TO MARKET 2094 (MAIN STREET).

H32

N: 13,759,941.35
E: 3,216,323.89
ELEV: 12.33'

DESC: 5/8" IR W/ 3.25" TXDOT ALUMINUM DISK SET IN CONCRETE

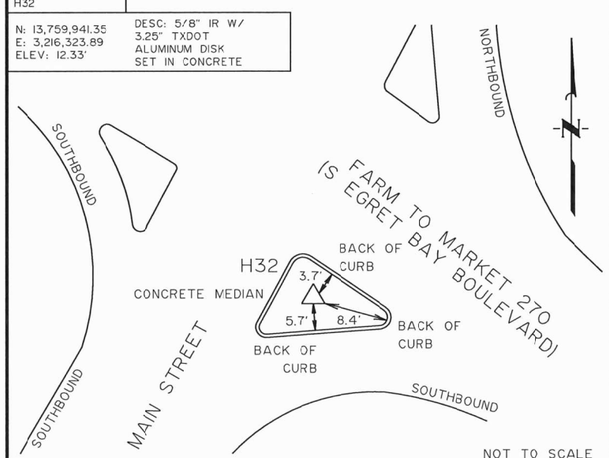

CONTROL POINT H32 IS A 3.25" TXDOT ALUMINUM DISK SET IN CONCRETE, IN THE SOUTHEAST MEDIAN AT THE INTERSECTION OF FARM TO MARKET 270 (S EGRET BAY BOULEVARD) AND FARM TO MARKET 518 (MAIN STREET).

H33

N: 13,758,887.17
E: 3,217,341.88
ELEV: 16.32'

DESC: 5/8" IR W/ 3.25" TXDOT ALUMINUM DISK SET IN CONCRETE

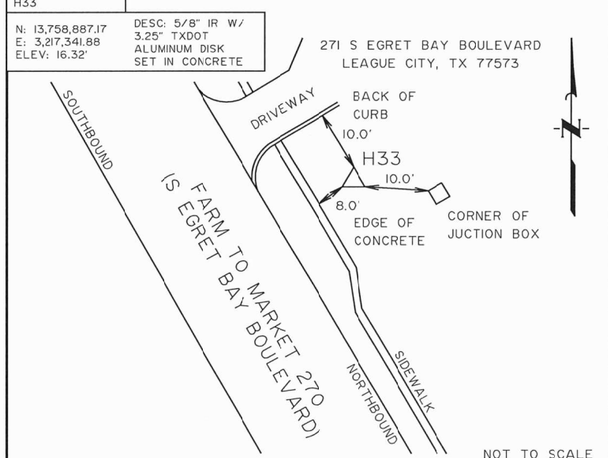

CONTROL POINT H33 IS A 3.25" TXDOT ALUMINUM DISK SET IN CONCRETE, ON THE EAST SIDE OF FARM TO MARKET 270 (S EGRET BAY BOULEVARD), LOCATED APPROXIMATELY 600' NORTHWEST OF ABIENE STREET.

H34

N: 13,757,627.17
E: 3,217,928.15
ELEV: 15.31'

DESC: 5/8" IR W/ 3.25" TXDOT ALUMINUM DISK SET IN CONCRETE

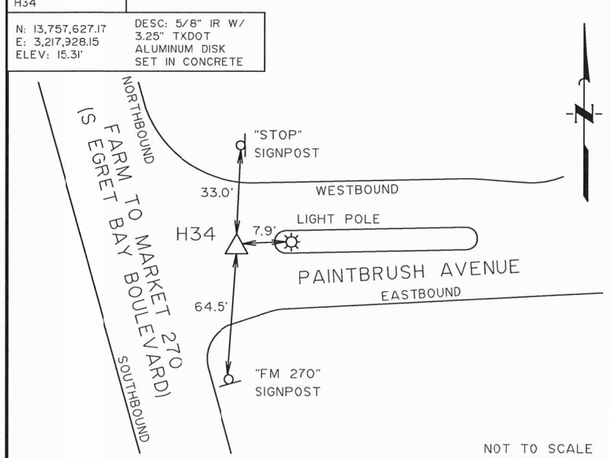

CONTROL POINT H34 IS A 3.25" TXDOT ALUMINUM DISK SET IN CONCRETE, AT THE INTERSECTION OF FARM TO MARKET 270 (EGRET BAY BOULEVARD) AND PAINTBRUSH AVENUE.

NOTES:

1. ALL BEARINGS ARE REFERENCED TO THE TEXAS COORDINATE SYSTEM OF 1983, SOUTH CENTRAL ZONE (NAD83, 2011 ADJUSTMENT, EPOCH 2010.00). ESTABLISHED BY GPS OBS (RTN), HELD HORIZONTAL MONUMENTS TXDOT LA MARQUE BASE STATION, TXDOT ANAHUAC BASE STATION, TXGA, TXHE, TXLI, TXLV, TXPT AND TXWH.

2. ALL DISTANCES AND COORDINATES ARE IN US SURVEY FEET DISPLAYED IN SURFACE VALUES WITH THE TxDOT SURFACE ADJUSTMENT FACTOR OF 1.000130.

3. ALL ELEVATIONS ARE REFERENCED TO THE NORTH AMERICAN VERTICAL DATUM OF 1988 (NAVD88) USING GEOID12B. ESTABLISHED BY DIGITAL LEVELS HOLDING VERTICAL MONUMENT N09127302.

THE SURVEY CONTROL INFORMATION HAS BEEN ACCEPTED AND INCORPORATED INTO THIS PS&E.

STATE OF TEXAS
REGISTERED
JIBRAEL K. AHMAD
6183
PROFESSIONAL
LAND SURVEYOR
06/30/22

THE CONTROL POINTS HEREIN WERE DETERMINED BY A SURVEY MADE ON THE GROUND UNDER MY SUPERVISION.

JONES|CARTER
2322 West Granc Parkway North, Suite 150
• Katy, Texas 77449 • 832.913.4000
Texas Bcard of Professional Engineers and
Land Surveyors Registration No. 10046100

HORIZONTAL & VERTICAL CONTROL SHEET LEAGUE CITY BIKE TRAIL

1 OF 5

FED. RD. DIV. NO.	FEDERAL AID PROJECT		SHEET NO.
06			81
STATE	DIST.	COUNTY	
TEXAS	HOU.	GALVESTON	
CONT.	SECT.	JOB	HIGHWAY
0912	73	215	FM 270, ETC

H35

N: 13,756,330.84
E: 3,218,190.91
ELEV: 13.60'

DESC: 5/8" IR W/ 3.25" TXDOT ALUMINUM DISK SET IN CONCRETE

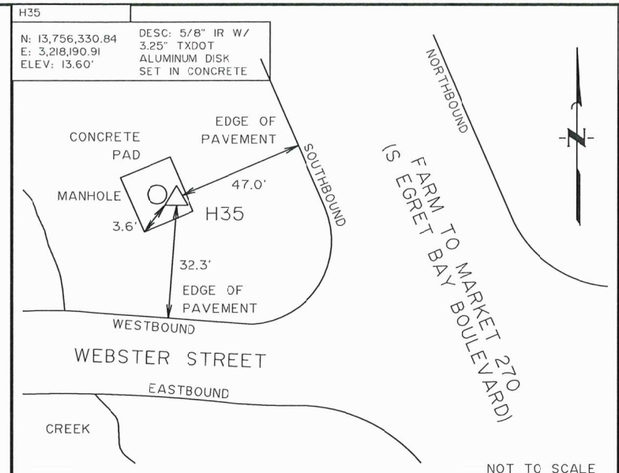

NOT TO SCALE
US SURVEY FEET

CONTROL POINT H35 IS A 3.25" TXDOT ALUMINUM DISK SET IN CONCRETE, AT THE INTERSECTION OF FARM TO MARKET 270 (IS EGRET BAY BOULEVARD) AND WEBSTER STREET.

H36

N: 13,755,155.17
E: 3,218,977.18
ELEV: 17.04'

DESC: 5/8" IR W/3.25" TXDOT ALUMINUM DISK SET IN CONCRETE HEADWALL

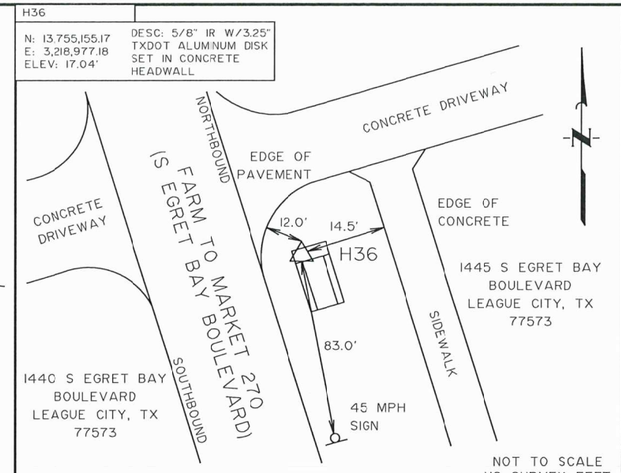

NOT TO SCALE
US SURVEY FEET

CONTROL POINT H36 IS A 3.25" TXDOT ALUMINUM DISK SET IN CONCRETE HEADWALL, ON THE EAST SIDE OF FARM TO MARKET 270 (IS EGRET BAY BOULEVARD), LOCATED APPROXIMATELY 1,300' SOUTHEAST OF WEBSTER STREET.

H37

N: 13,753,891.59
E: 3,219,560.23
ELEV: 16.60'

DESC: 5/8" IR W/ 3.25" TXDOT ALUMINUM DISK SET IN CONCRETE

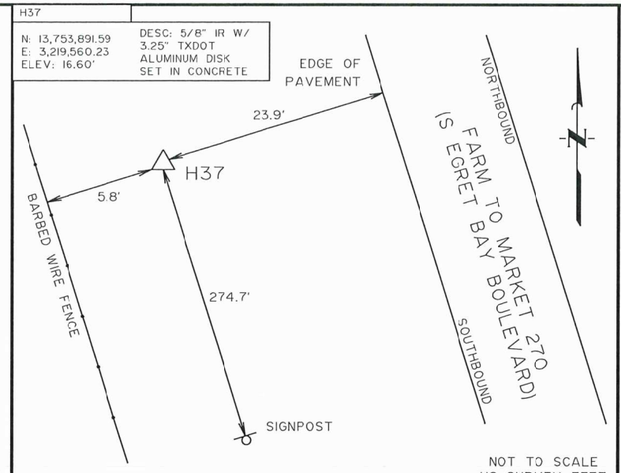

NOT TO SCALE
US SURVEY FEET

CONTROL POINT H37 IS A 3.25" TXDOT ALUMINUM DISK SET IN CONCRETE, ON THE WEST SIDE OF FARM TO MARKET 270(IS EGRET BAY BOULEVARD), LOCATED APPROXIMATELY 400' SOUTHEAST OF AUSTIN STREET.

H38

N: 13,752,628.40
E: 3,220,297.21
ELEV: 20.75'

DESC: 5/8" IR W/ 3.25" TXDOT ALUMINUM DISK SET IN CONCRETE

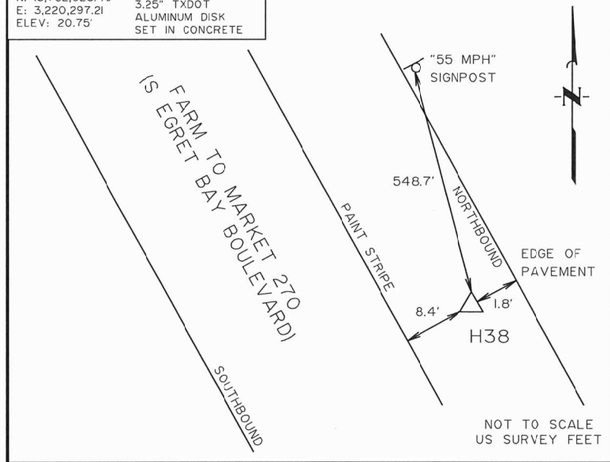

NOT TO SCALE
US SURVEY FEET

CONTROL POINT H38 IS A 3.25" TXDOT ALUMINUM DISK SET IN CONCRETE, ON THE EAST SIDE OF FARM TO MARKET 270 (IS EGRET BAY BOULEVARD), LOCATED APPROXIMATELY 300' NORTHWEST OF HEWITT STREET.

H39

N: 13,751,468.22
E: 3,220,700.31
ELEV: 19.54'

DESC: MAG NAIL WITH SHINER SET IN ASPHALT

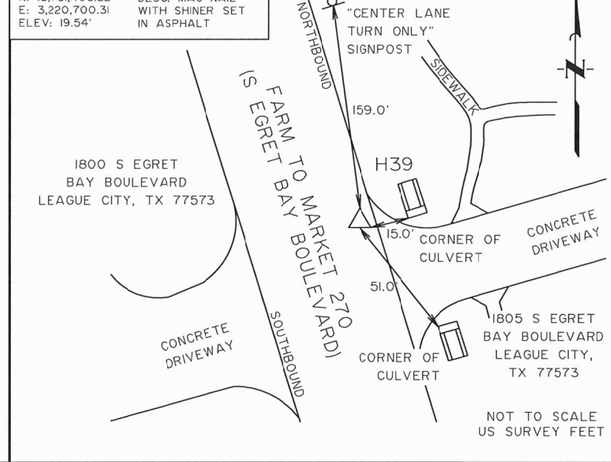

NOT TO SCALE
US SURVEY FEET

CONTROL POINT H39 IS A MAG NAIL WITH SHINER SET IN ASPHALT, ON THE EAST SIDE OF FARM TO MARKET 270 (IS EGRET BAY BOULEVARD), LOCATED APPROXIMATELY 900' SOUTHEAST OF HEWITT STREET.

H40

N: 13,750,595.36
E: 3,221,013.38
ELEV: 16.79'

DESC: 5/8" IR W/ 3.25" TXDOT ALUMINUM DISK SET IN CONCRETE

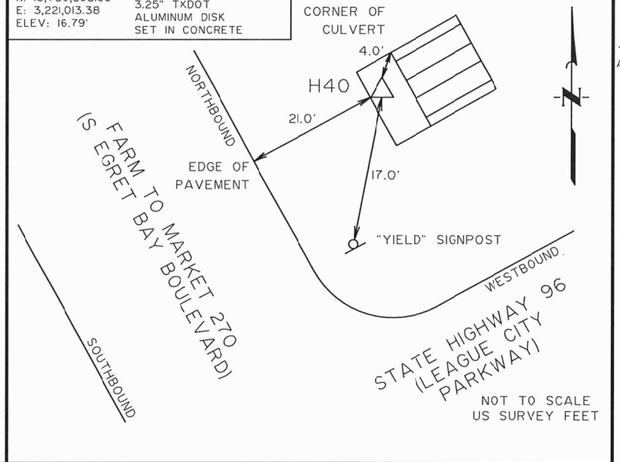

NOT TO SCALE
US SURVEY FEET

CONTROL POINT H40 IS A 3.25" TXDOT ALUMINUM DISK SET IN CONCRETE HEADWALL, AT THE INTERSECTION OF FARM TO MARKET 270 (IS EGRET BAY BOULEVARD) AND STATE HIGHWAY 96 (LEAGUE CITY PARKWAY).

H41

N: 13,750,892.24
E: 3,222,073.99
ELEV: 16.45'

DESC: MAG NAIL WITH SHINER SET IN ASPHALT

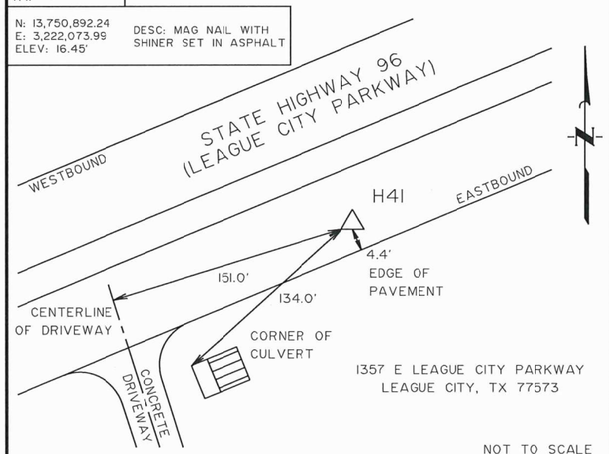

NOT TO SCALE
US SURVEY FEET

CONTROL POINT H41 IS A MAG NAIL WITH SHINER SET IN ASPHALT, ON THE SOUTH SIDE OF STATE HIGHWAY 96 (LEAGUE CITY PARKWAY), LOCATED APPROXIMATELY 1,000' SOUTHWEST OF LOUISIANA AVENUE.

H42

N: 13,751,684.64
E: 3,223,255.80
ELEV: 19.05'

DESC: 5/8" IR W/3.25" TXDOT ALUMINUM DISK SET IN CONCRETE HEADWALL

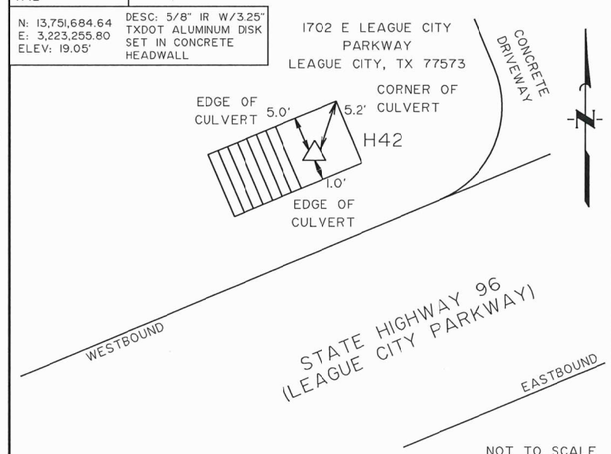

NOT TO SCALE
US SURVEY FEET

CONTROL POINT H42 IS A 3.25" TXDOT ALUMINUM DISK SET IN CONCRETE HEADWALL, ON THE NORTH SIDE OF STATE HIGHWAY 96 (LEAGUE CITY PARKWAY), LOCATED APPROXIMATELY 300 NORTHEAST OF LOUISIANA AVENUE.

H43

N: 13,751,934.08
E: 3,224,617.84
ELEV: 21.23'

DESC: 5/8" IR W/3.25" TXDOT ALUMINUM DISK SET IN CONCRETE HEADWALL

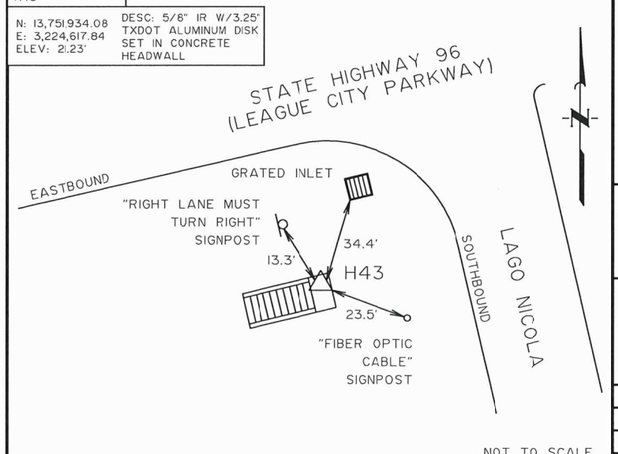

NOT TO SCALE
US SURVEY FEET

CONTROL POINT H43 IS A 3.25" TXDOT ALUMINUM DISK SET IN CONCRETE HEADWALL, AT THE INTERSECTION OF STATE HIGHWAY 96 (LEAGUE CITY PARKWAY) AND LAGO NICOLA.

NOTES:

1. ALL BEARINGS ARE REFERENCED TO THE TEXAS COORDINATE SYSTEM OF 1983, SOUTH CENTRAL ZONE (NAD83, 2011 ADJUSTMENT, EPOCH 2010.00). ESTABLISHED BY GPS OBS (RTN), HELD HORIZONTAL MONUMENTS TXDOT LA MARQUE BASE STATION, TXDOT ANAHUAC BASE STATION, TXGA, TXHE, TXLI, TXLV, TXPT AND TXWH.

2. ALL DISTANCES AND COORDINATES ARE IN US SURVEY FEET DISPLAYED IN SURFACE VALUES WITH THE TxDOT SURFACE ADJUSTMENT FACTOR OF 1.000130.

3. ALL ELEVATIONS ARE REFERENCED TO THE NORTH AMERICAN VERTICAL DATUM OF 1988 (NAVD88) USING GEOID12B. ESTABLISHED BY DIGITAL LEVELS HOLDING VERTICAL MONUMENT NO9127302.

THE SURVEY CONTROL INFORMATION HAS BEEN ACCEPTED AND INCORPORATED INTO THIS PS&E.

STATE OF TEXAS
REGISTERED
JIBRAEL K. AHMAD
6183
PROFESSIONAL
LAND SURVEYOR
06/30/22

THE CONTROL POINTS HEREIN WERE DETERMINED BY A SURVEY MADE ON THE GROUND UNDER MY SUPERVISION.

JONES|CARTER
2322 West Grand Parkway North, Suite 150
• Katy, Texas 77449 • 832.913.4000
Texas Board of Professional Engineers and Land Surveyors Registration No. 10046100

HORIZONTAL & VERTICAL CONTROL SHEET
LEAGUE CITY BIKE TRAIL

2 OF 5

FED. RD. DIV. NO.	FEDERAL AID PROJECT		SHEET NO.
06			82
STATE	DIST.	COUNTY	
TEXAS	HOU.	GALVESTON	
CONT.	SECT	JOB	HIGHWAY
0912	73	215	FM 270, ETC

H44

N: 13,752,561.32
E: 3,225,761.54
ELEV: 20.02'

DESC: MAG NAIL WITH SHINER SET IN ASPHALT

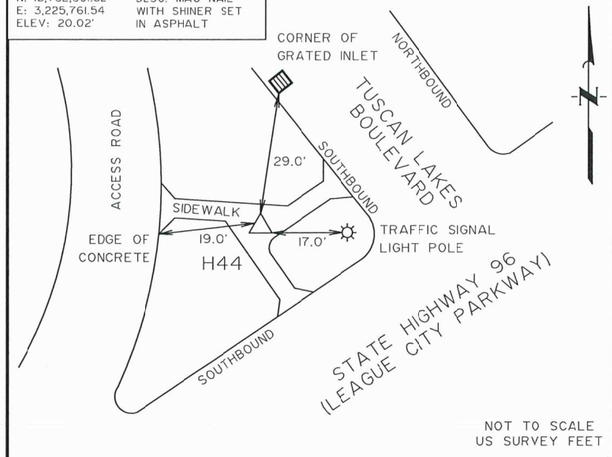

CONTROL POINT H44 IS A MAG NAIL WITH SHINER SET IN CONCRETE, AT THE INTERSECTION OF STATE HIGHWAY 96 (LEAGUE CITY PARKWAY) AND TUSCAN LAKES BOULEVARD.

H45

N: 13,753,252.23
E: 3,226,798.89
ELEV: 16.13'

DESC: 5/8" IR W/ 3.25" TXDOT ALUMINUM DISK SET IN CONCRETE

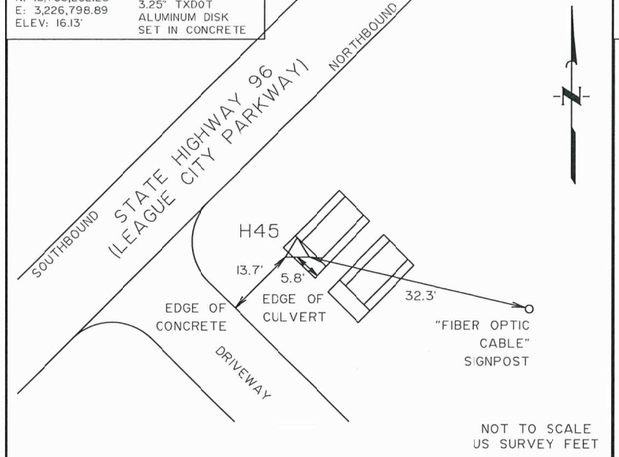

CONTROL POINT H45 IS A 3.25" TXDOT ALUMINUM DISK SET N CONCRETE, ON THE EAST SIDE OF STATE HIGHWAY 96 (LEAGUE CITY PARKWAY), LOCATED APPROXIMATELY 1,250' SOUTHWEST OF SOUTH SHORE BOULEVARD.

H46

N: 13,754,076.03
E: 3,227,413.66
ELEV: 17.51'

DESC: MAG NAIL WITH SHINER SET IN ASPHALT

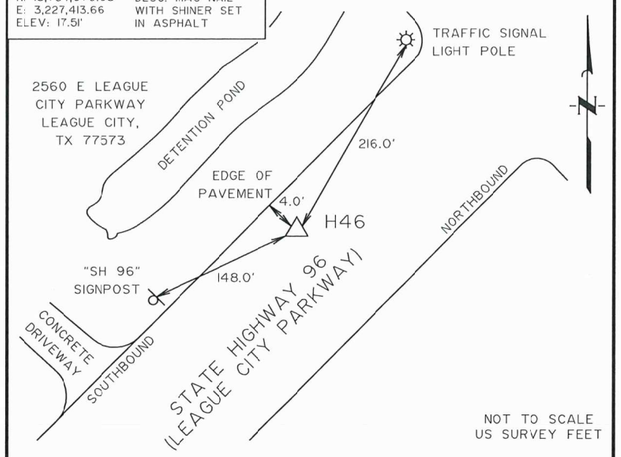

CONTROL POINT H46 IS A MAG NAIL WITH SHINER SET IN ASPHALT, ON THE WEST SIDE OF STATE HIGHWAY 96 (LEAGUE CITY PARKWAY), LOCATED APPROXIMATELY 300' SOUTHWEST OF SOUTH SHORE BOULEVARD.

H47

N: 13,755,051.86
E: 3,228,513.09
ELEV: 16.54'

DESC: 5/8" IR W/ 3.25" TXDOT ALUMINUM DISK SET IN CONCRETE

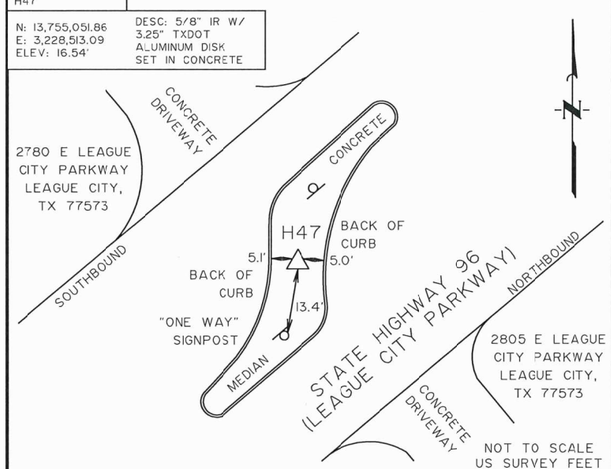

CONTROL POINT H47 IS A 3.25" TXDOT ALUMINUM DISK SET IN CONCRETE, IN THE CENTER MEDIAN OF STATE HIGHWAY 96 (LEAGUE CITY PARKWAY), LOCATED APPROXIMATELY 1,000' SOUTHWEST OF SEACREST BOULEVARD.

H48

N: 13,755,936.33
E: 3,229,579.04
ELEV: 12.90'

DESC: 5/8" IR W/3.25" TXDOT ALUMINUM DISK SET IN CONCRETE HEADWALL

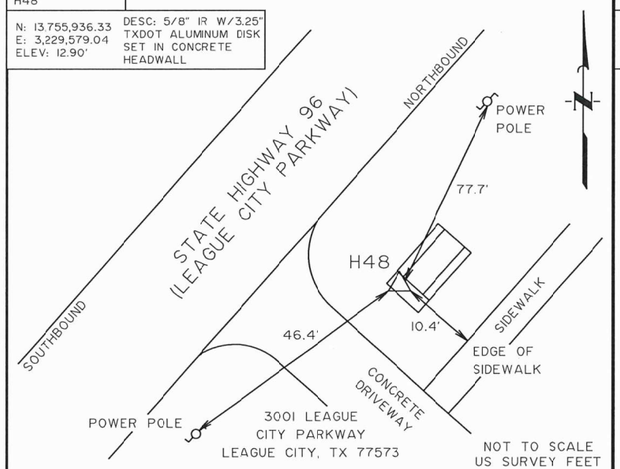

CONTROL POINT H48 IS A 3.25" TXDOT ALUMINUM DISK SET IN CONCRETE HEADWALL, ON THE EAST SIDE OF STATE HIGHWAY 96 (LEAGUE CITY PARKWAY), LOCATED APPROXIMATELY 900' SOUTHWEST OF BAY RIDGE DRIVE.

H49

N: 13,756,970.50
E: 3,230,426.96
ELEV: 15.28'

DESC: MAG NAIL WITH SHINER SET IN ASPHALT

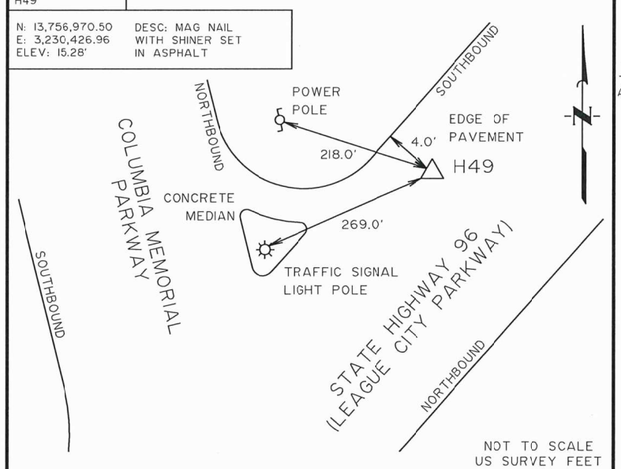

CONTROL POINT H49 IS A MAG NAIL WITH SHINER SET IN ASPHALT, ON THE NORTHWEST SIDE OF STATE HIGHWAY 96 (LEAGUE CITY PARKWAY), LOCATED APPROXIMATELY 300' NORTHEAST OF COLUMBIA MEMORIAL PARKWAY.

H50

N: 13,757,724.78
E: 3,231,637.02
ELEV: 11.38'

DESC: 5/8" IR W/3.25" TXDOT ALUMINUM DISK SET IN CONCRETE HEADWALL

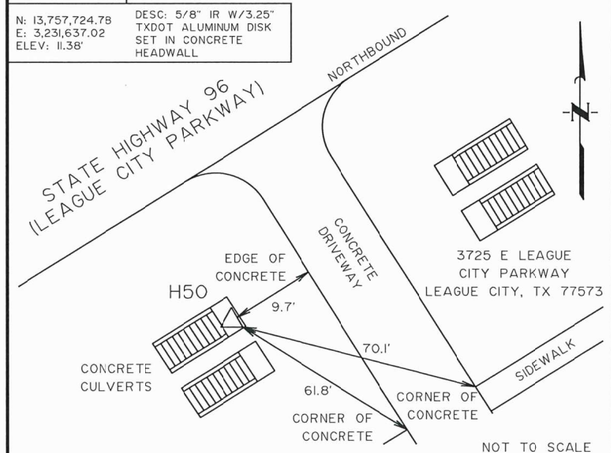

CONTROL POINT H50 IS A 3.25" TXDOT ALUMINUM DISK SET IN CONCRETE HEADWALL, ON THE SOUTH SIDE OF STATE HIGHWAY 96 (LEAGUE CITY PARKWAY), LOCATED APPROXIMATELY 350' SOUTHWEST OF LAWRENCE ROAD.

H51

N: 13,758,740.00
E: 3,232,708.77
ELEV: 15.95'

DESC: 5/8" IR W/ 3.25" TXDOT ALUMINUM DISK SET IN ASPHALT

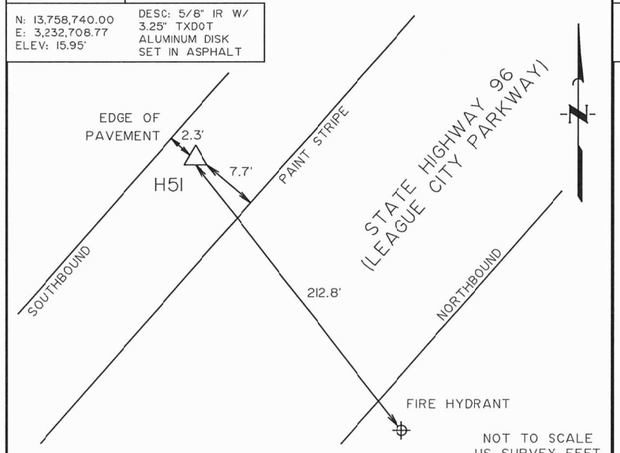

CONTROL POINT H51 IS A 3.25" TXDOT ALUMINUM DISK SET IN ASPHALT, ON THE WEST SIDE OF STATE HIGHWAY 96 (LEAGUE CITY PARKWAY), LOCATED APPROXIMATELY 1,000' SOUTHWEST OF ANDERS LANE.

H52

N: 13,759,490.55
E: 3,233,712.65
ELEV: 15.81'

DESC: 5/8" IR W/3.25" TXDOT ALUMINUM DISK SET IN CONCRETE HEADWALL

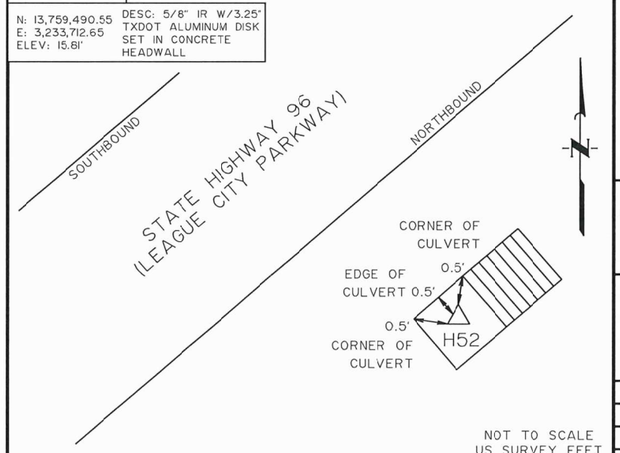

CONTROL POINT H52 IS A 3.25" TXDOT ALUMINUM DISK SET IN CONCRETE HEADWALL, ON THE SOUTH SIDE OF STATE HIGHWAY 96 (LEAGUE CITY PARKWAY) APPROXIMATELY 200' NORTHEAST OF MAR BELLA PARKWAY.

NOTES:

1. ALL BEARINGS ARE REFERENCED TO THE TEXAS COORDINATE SYSTEM OF 1983, SOUTH CENTRAL ZONE (NAD83, 2011 ADJUSTMENT, EPOCH 2010.00). ESTABLISHED BY GPS OBS (RTN), HELD HORIZONTAL MONUMENTS TXDOT LA MARQUE BASE STATION, TXDOT ANAHUAC BASE STATION, TXGA, TXHE, TXLI, TXLV, TXPT AND TXWH.

2. ALL DISTANCES AND COORDINATES ARE IN US SURVEY FEET DISPLAYED IN SURFACE VALUES WITH THE TxDOT SURFACE ADJUSTMENT FACTOR OF 1.000130.

3. ALL ELEVATIONS ARE REFERENCED TO THE NORTH AMERICAN VERTICAL DATUM OF 1988 (NAVD88) USING GEOID12B. ESTABLISHED BY DIGITAL LEVELS HOLDING VERTICAL MONUMENT NO9127302.

THE SURVEY CONTROL INFORMATION HAS BEEN ACCEPTED AND INCORPORATED INTO THIS PS&E.

STATE OF TEXAS
REGISTERED
JIBRAEL K. AHMAD
6183
PROFESSIONAL
LAND SURVEYOR
06/30/22

THE CONTROL POINTS HEREIN WERE DETERMINED BY A SURVEY MADE ON THE GROUND UNDER MY SUPERVISION.

JONES|CARTER
2322 West Grand Parkway North, Suite 150
• Katy, Texas 77449 • 832.913.4000
Texas Board of Professional Engineers and Land Surveyors Registration No. 10046100

HORIZONTAL & VERTICAL CONTROL SHEET LEAGUE CITY BIKE TRAIL

3 OF 5

FED. RD. DIV. NO.	FEDERAL AID PROJECT		SHEET NO.
06			83
STATE	DIST.	COUNTY	
TEXAS	HOU.	GALVESTON	
CONT.	SECT.	JOB	HIGHWAY
0912	73	25	FM 270, ETC

H53

N: 13,760,500.37
E: 3,234,636.50
ELEV: 15.94'

DESC: 5/8" IR W/ 3.25" TXDOT ALUMINUM DISK SET IN ASPHALT

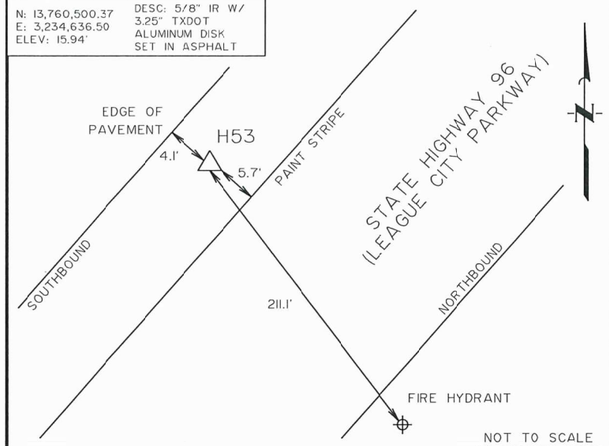

CONTROL POINT H53 IS A 3.25" TXDOT ALUMINUM DISK SET IN ASPHALT, ON THE NORTH SIDE OF STATE HIGHWAY 96 (LEAGUE CITY PARKWAY), LOCATED APPROXIMATELY 1,100' SOUTHWEST OF ISLA VISTA DRIVE.

H54

N: 13,761,217.67
E: 3,235,553.98
ELEV: 17.36'

DESC: MAG NAIL WITH SHINER SET IN ASPHALT

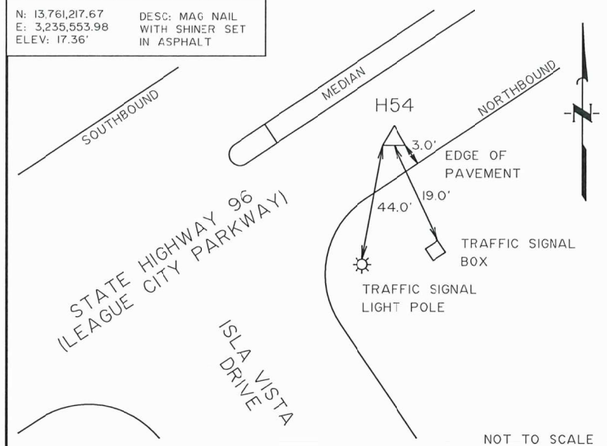

CONTROL POINT H54 IS A MAG NAIL WITH SHINER SET IN ASPHALT, AT THE INTERSECTION OF STATE HIGHWAY 96 (LEAGUE CITY PARKWAY) AND ISLA VISTA DRIVE.

H55

N: 13,76,1902.33
E: 3,236,411.89
ELEV: 18.13'

DESC: 5/8" IR W/ 3.25" TXDOT ALUMINUM DISK SET IN CONCRETE

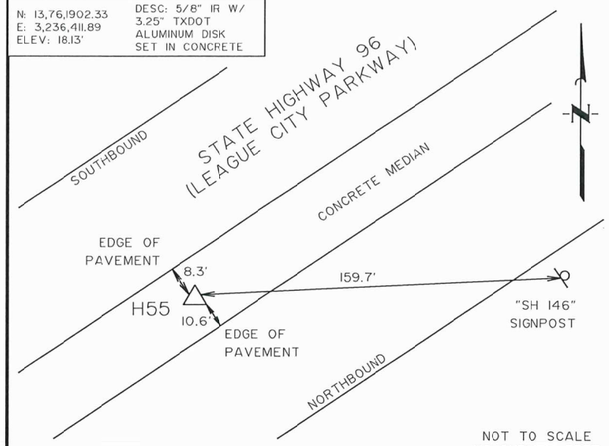

CONTROL POINT H55 IS A 3.25" TXDOT ALUMINUM DISK SET IN CONCRETE, IN THE MEDIAN OF STATE HIGHWAY 96 (LEAGUE CITY PARKWAY), LOCATED APPROXIMATELY 1,000' SOUTHWEST OF STATE HIGHWAY 146.

H56

N: 13,762,330.03
E: 3,237,151.20
ELEV: 17.91'

DESC: MAG NAIL WITH SHINER SET IN ASPHALT

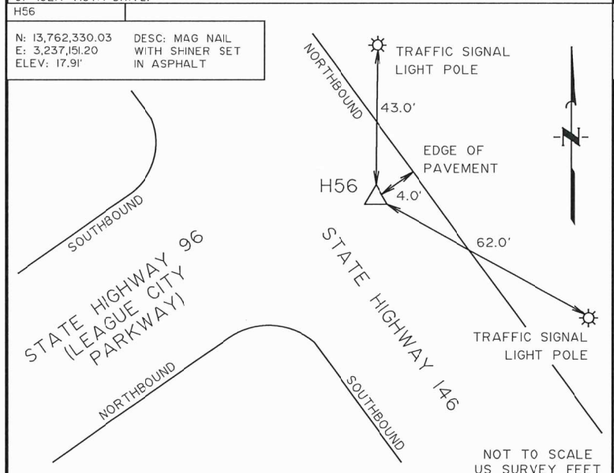

CONTROL POINT H56 IS A MAG NAIL WITH SHINER SET IN ASPHALT, AT THE INTERSECTION OF STATE HIGHWAY 96 (LEAGUE CITY PARKWAY) AND STATE HIGHWAY 146.

H-9

N: 13,749,719.79
E: 3,226,017.71
ELEV: 18.69'

DESC: 5/8" IR W/ 3.25" TXDOT ALUMINUM DISK FOUND IN CONCRETE

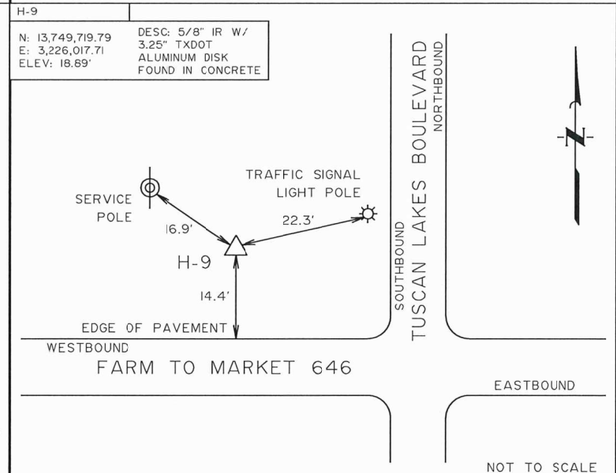

CONTROL POINT H-9 IS A 3.25" TXDOT ALUMINUM DISK FOUND IN CONCRETE, AT THE NORTHWEST INTERSECTION OF TUSCAN LAKES BOULEVARD AND FARM TO MARKET 646.

H-21

N: 13,752,419.31
E: 3,242,564.23
ELEV: 13.51'

DESC: 5/8" IR W/ 3.25" TXDOT ALUMINUM DISK FOUND IN CONCRETE

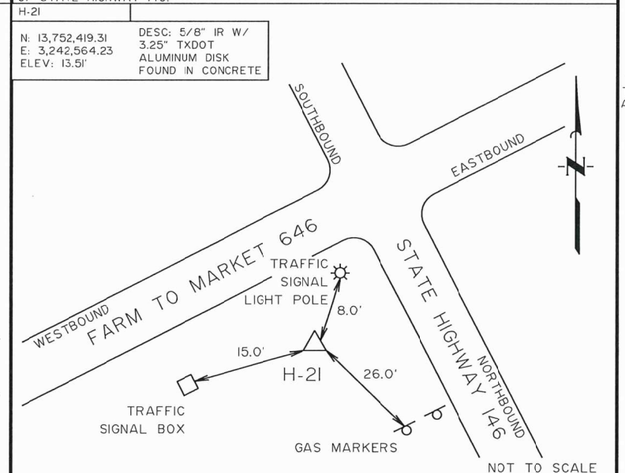

CONTROL POINT H-21 IS A 3.25" TXDOT ALUMINUM DISK FOUND IN CONCRETE, AT THE SOUTH WEST INTERSECTION OF STATE HIGHWAY 146 AND FARM TO MARKET 646.

H-62

N: 13,756,846.97
E: 3,240,087.91
ELEV: 15.53'

DESC: 5/8" IR W/ 3.25" TXDOT ALUMINUM DISK FOUND IN CONCRETE

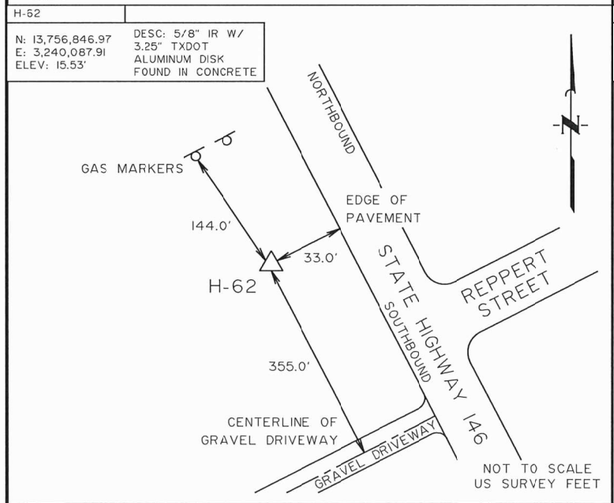

CONTROL POINT H-62 IS A 3.25" TXDOT ALUMINUM DISK FOUND IN CONCRETE, ON THE WEST SIDE OF STATE HIGHWAY 146, LOCATED APPROXIMATELY 100' NORTHWEST OF REPPERT STREET.

H20020013

N: 13,746,287.68
E: 3,226,238.89
ELEV: 16.29'

DESC: 5/8" IR W/ 3.25" TXDOT ALUMINUM DISK FOUND IN CONCRETE

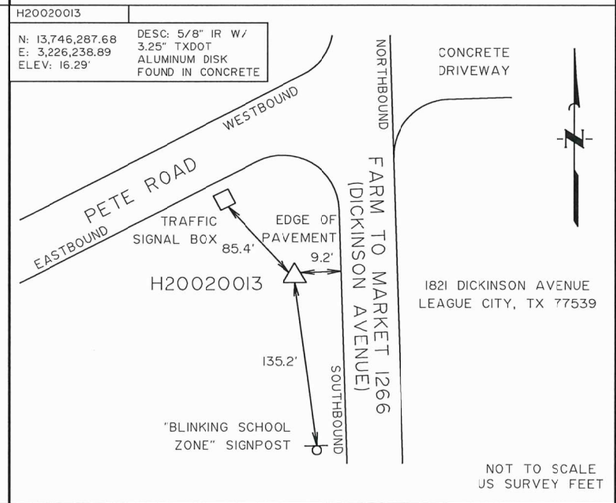

CONTROL POINT H20020013 IS A 3.25" TXDOT ALUMINUM DISK FOUND IN CONCRETE, ON THE WEST SIDE OF DICKINSON AVENUE, LOCATED APPROXIMATELY 250' SOUTH OF PETE ROAD.

H20020014

N: 13,741,882.20
E: 3,226,468.82
ELEV: 14.16'

DESC: 5/8" IR W/ 3.25" TXDOT ALUMINUM DISK FOUND IN CONCRETE

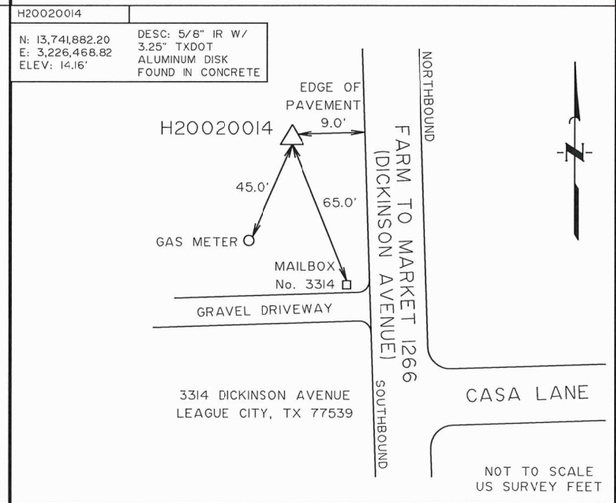

CONTROL POINT H20020014 IS A 3.25" TXDOT ALUMINUM DISK FOUND IN CONCRETE, ON THE WEST SIDE OF DICKINSON AVENUE, LOCATED APPROXIMATELY 100' NORTH OF CASA LANE.

NOTES:

1. ALL BEARINGS ARE REFERENCED TO THE TEXAS COORDINATE SYSTEM OF 1983, SOUTH CENTRAL ZONE (NAD83, 2011 ADJUSTMENT, EPOCH 2010.00). ESTABLISHED BY GPS OBS (RTN), HELD HORIZONTAL MONUMENTS TXDOT LA MARQUE BASE STATION, TXDOT ANAHUAC BASE STATION, TXGA, TXHE, TXLI, TXLV, TXPT AND TXWH.

2. ALL DISTANCES AND COORDINATES ARE IN US SURVEY FEET DISPLAYED IN SURFACE VALUES WITH THE TxDOT SURFACE ADJUSTMENT FACTOR OF 1.000130.

3. ALL ELEVATIONS ARE REFERENCED TO THE NORTH AMERICAN VERTICAL DATUM OF 1988 (NAVD88) USING GEOID12B. ESTABLISHED BY DIGITAL LEVELS HOLDING VERTICAL MONUMENT NO9127302.

THE SURVEY CONTROL INFORMATION HAS BEEN ACCEPTED AND INCORPORATED INTO THIS PS&E.

STATE OF TEXAS
REGISTERED
JIBRAEL K. AHMAD
6183
PROFESSIONAL
LAND SURVEYOR

06/30/22

THE CONTROL POINTS HEREIN WERE DETERMINED BY A SURVEY MADE ON THE GROUND UNDER MY SUPERVISION.

JONES|CARTER
2322 West Grand Parkway North, Suite 150
• Katy, Texas 77449 • 832.913.4000
Texas Board of Professional Engineers and Land Surveyors Registration No. 10046100

HORIZONTAL & VERTICAL CONTROL SHEET LEAGUE CITY BIKE TRAIL

FED. RD. DIV. NO.	FEDERAL AID PROJECT		SHEET NO.
06			84
STATE	DIST.	COUNTY	
TEXAS	HOU.	GALVESTON	
CONT.	SECT.	JOB	HIGHWAY
0912	73	215	FM 270, ETC

AW1082

N: 13,746,287.68
E: 3,226,238.69
ELEV: 16.29'

DESC: 5/8" IR W/ CGS MONUMENT DISK STAMPED "P 639 1942" FOUND IN CONCRETE

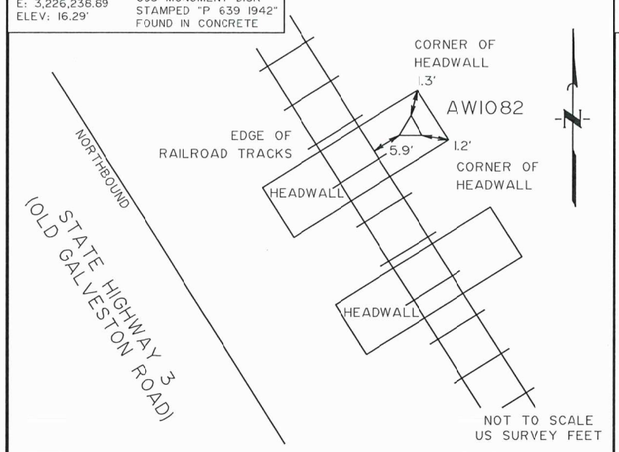

CONTROL POINT AW1082 IS A CGS MONUMENT DISK STAMPED "P 639 1942" FOUND IN CONCRETE, ON THE EAST SIDE OF STATE HIGHWAY 3 (OLD GALVESTON ROAD), LOCATED APPROXIMATELY 1,400' SOUTHEAST OF NASA BYPASS.

AW5664

N: 13,746,287.68
E: 3,226,238.89
ELEV: 16.29'

DESC: 5/8" IR W/ HGCSD MONUMENT DISK STAMPED "HGCSD 53 1987" FOUND IN CONCRETE

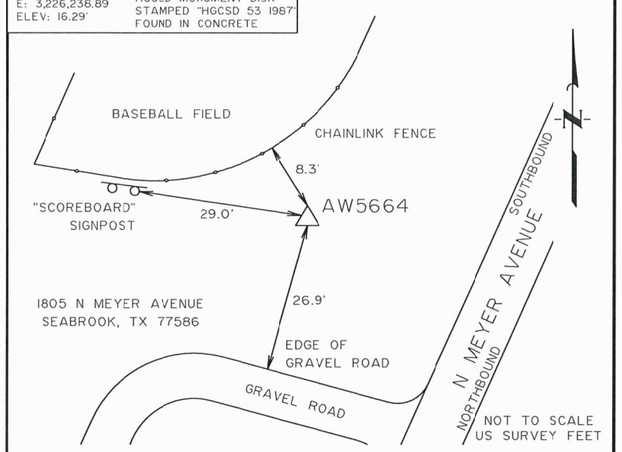

CONTROL POINT AW5664 IS A HGCSD MONUMENT DISK STAMPED "HGCSD 53 1987" FOUND IN CONCRETE, ON THE WEST SIDE OF N MEYER AVENUE, LOCATED APPROXIMATELY 150' NORTHWEST OF BROOKWOOD COURT.

NOTES:

1. ALL BEARINGS ARE REFERENCED TO THE TEXAS COORDINATE SYSTEM OF 1983, SOUTH CENTRAL ZONE (NAD83, 2011 ADJUSTMENT, EPOCH 2010.00). ESTABLISHED BY GPS OBS (RTN), HELD HORIZONTAL MONUMENTS TXDOT LA MARQUE BASE STATION, TXDOT ANAHUAC BASE STATION, TXGA, TXHE, TXLI, TXLV, TXPT AND TXWH.

2. ALL DISTANCES AND COORDINATES ARE IN US SURVEY FEET DISPLAYED IN SURFACE VALUES WITH THE TxDOT SURFACE ADJUSTMENT FACTOR OF 1.000130.

3. ALL ELEVATIONS ARE REFERENCED TO THE NORTH AMERICAN VERTICAL DATUM OF 1988 (NAV088) USING GEOID12B. ESTABLISHED BY DIGITAL LEVELS HOLDING VERTICAL MONUMENT NO9127302.

THE SURVEY CONTROL INFORMATION HAS BEEN ACCEPTED AND INCORPORATED INTO THIS PS&E.

STATE OF TEXAS
REGISTERED
JIBRAEL K. AHMAD
6183
PROFESSIONAL
LAND SURVEYOR
6/30/22

THE CONTROL POINTS HEREIN WERE DETERMINED BY A SURVEY MADE ON THE GROUND UNDER MY SUPERVISION.

JONES|CARTER
2322 West Grand Parkway North, Suite 150
• Katy, Texas 77449 • 832.913.4000
Texas Board of Professional Engineers and Land Surveyors Registration No. 10046100

HORIZONTAL & VERTICAL CONTROL SHEET LEAGUE CITY BIKE TRAIL

5 OF 5

FED. RD. DIV. NO.	FEDERAL AID PROJECT		SHEET NO.
06			85
STATE	DIST.	COUNTY	
TEXAS	HOU.	GALVESTON	
CONT.	SECT.	JOB	HIGHWAY
0912	73	215	FM 270, ETC

FM 270 HORIZONTAL ALIGNMENT DATA

Beginning chain FM_270 description
Feature: CL

Point 61 N 13,760,117.1164 E 3,216,081.7340 Sta 128+00.00

Course from 61 to PC FM_270_3 S 69° 54′ 19.48" E Dist 22.9426

Curve Data					
Curve FM_270_3					
P.I. Station	130+44.95	N	13,760,032.9581	E	3,216,311.7748
Delta =	26° 10′ 22.15" (RT)				
Degree =	5° 59′ 57.19"				
Tangent =	222.0092				
Length =	436.2704				
Radius =	955.0538				
External =	25.4644				
Long Chord =	432.4871				
Mid. Ord. =	24.8030				
P.C. Station	128+22.94	N	13,760,109.2340	E	3,216,103.2800
P.T. Station	132+59.21	N	13,759,872.5400	E	3,216,465.2483
C.C.		N	13,759,212.3175	E	3,215,775.1512
Back = S	69° 54′ 19.48" E				
Ahead = S	43° 43′ 57.32" E				
Chord Bear = S	56° 49′ 08.40" E				

Course from PT FM_270_3 to PC FM_270_6 S 43° 43′ 57.32" E Dist 178.8123

Curve Data					
Curve FM_270_6					
P.I. Station	140+96.34	N	13,759,267.6527	E	3,217,043.9498
Delta =	13° 06′ 25.74" (RT)				
Degree =	0° 59′ 59.53"				
Tangent =	658.3162				
Length =	1,310.8854				
Radius =	5,730.3228				
External =	37.6907				
Long Chord =	1,308.0289				
Mid. Ord. =	37.4444				
P.C. Station	134+38.03	N	13,759,743.3349	E	3,216,588.8601
P.T. Station	147+48.91	N	13,758,701.1612	E	3,217,379.3115
C.C.		N	13,755,781.9998	E	3,212,448.2775
Back = S	43° 43′ 57.32" E				
Ahead = S	30° 37′ 31.58" E				
Chord Bear = S	37° 10′ 44.45" E				

Course from PT FM_270_6 to PC FM_270_9 S 30° 37′ 31.58" E Dist 214.9568

Curve Data					
Curve FM_270_9					
P.I. Station	155+70.79	N	13,757,993.9236	E	3,217,797.9946
Delta =	18° 03′ 15.59" (RT)				
Degree =	1° 29′ 59.30"				
Tangent =	606.9194				
Length =	1,203.7785				
Radius =	3,820.2152				
External =	47.9104				
Long Chord =	1,198.8044				
Mid. Ord. =	47.3170				
P.C. Station	149+63.87	N	13,758,516.1874	E	3,217,488.8156
P.T. Station	161+67.65	N	13,757,401.5540	E	3,217,930.0913
C.C.		N	13,756,570.0799	E	3,214,201.4596
Back = S	30° 37′ 31.58" E				
Ahead = S	12° 34′ 16.00" E				
Chord Bear = S	21° 35′ 53.79" E				

Course from PT FM_270_9 to PC FM_270_12 S 12° 34′ 16.00" E Dist 331.2002

Curve Data					
Curve FM_270_12					
P.I. Station	169+08.22	N	13,756,678.7294	E	3,218,091.2792
Delta =	16° 15′ 46.58" (LT)				
Degree =	1° 59′ 59.06"				
Tangent =	409.3786				
Length =	813.2527				
Radius =	2,865.1614				
External =	29.0985				
Long Chord =	810.5254				
Mid. Ord. =	28.8060				
P.C. Station	164+98.85	N	13,757,078.2938	E	3,218,002.1775
P.T. Station	173+12.10	N	13,756,320.1055	E	3,218,288.7119
C.C.		N	13,757,701.8994	E	3,220,798.6513
Back = S	12° 34′ 16.00" E				
Ahead = S	28° 50′ 02.58" E				
Chord Bear = S	20° 42′ 09.29" E				

Course from PT FM_270_12 to PC FM_270_15 S 28° 50′ 02.58" E Dist 3,497.3305

Curve Data					
Curve FM_270_15					
P.I. Station	213+25.19	N	13,752,804.5558	E	3,220,224.1233
Delta =	10° 17′ 10.21" (RT)				
Degree =	0° 59′ 59.53"				
Tangent =	515.7614				
Length =	1,028.7507				
Radius =	5,730.3228				
External =	23.1639				
Long Chord =	1,027.3698				
Mid. Ord. =	23.0706				
P.C. Station	208+09.43	N	13,753,256.3732	E	3,219,975.3848
P.T. Station	218+38.18	N	13,752,315.5840	E	3,220,388.1854
C.C.		N	13,750,492.7854	E	3,214,955.5061
Back = S	28° 50′ 02.58" E				
Ahead = S	18° 32′ 52.37" E				
Chord Bear = S	23° 41′ 27.47" E				

Course from PT FM_270_15 to PC FM_270_18 S 18° 32′ 52.37" E Dist 2,908.2378

Curve Data					
Curve FM_270_18					
P.I. Station	253+19.96	N	13,749,014.6522	E	3,221,495.7299
Delta =	22° 38′ 22.38" (LT)				
Degree =	1° 59′ 59.06"				
Tangent =	573.5442				
Length =	1,132.1247				
Radius =	2,865.1614				
External =	56.8418				
Long Chord =	1,124.7740				
Mid. Ord. =	55.7361				
P.C. Station	247+46.42	N	13,749,558.4055	E	3,221,313.2872
P.T. Station	258+78.54	N	13,748,583.0262	E	3,221,873.4227
C.C.		N	13,750,469.8048	E	3,224,029.6269
Back = S	18° 32′ 52.37" E				
Ahead = S	41° 11′ 14.75" E				
Chord Bear = S	29° 52′ 03.56" E				

Course from PT FM_270_18 to 62 S 41° 11′ 14.75" E Dist 836.5207

Point 62 N 13,747,953.4947 E 3,222,424.2920 Sta 267+15.06

Ending chain FM_270 description

NO.	DATE	REVISION	APPROVED

STATE OF TEXAS
JOHANNA TORRES
130063
LICENSED
PROFESSIONAL ENGINEER
johannatorres
8/1/2023

Texas Department of Transportation
©2023

JONES|CARTER
Texas Board of Professional Engineers Registration No. F-23290
4350 Lockhill Selma Rd, Suite 100 • San Antonio, Texas 78249 • 210.494.5511

SH 96, FM 270
HORIZONTAL
ALIGNMENT DATA

SHEET **01** OF **18**

DRAWN	FED.RD. DIV.NO.	FEDERAL AID PROJECT NO.		HIGHWAY NO.
AA	06			FM 270, ETC
DESIGNED	STATE	DIST.	COUNTY	SHEET NO.
JT	TEXAS	HOUSTON	GALVESTON	86
CHECKED	CONT.	SECT.	JOB	
NG	0912	73	215	
APPROVED				
DD				

PLOTDRIVER: LCBF.pltcfg
PENTABLE: LCBF.tbl
DATE: 8/1/2023 11:52:28 AM USER: sss
FILE: c:\bms\pwe101-01\stella.staver-scull\dms22646\LCBF_HALN_01.dgn

SH 96 HORIZONTAL ALIGNMENT DATA

CURVE DATA

CURVE SH_96_1
P.I. STATION 205+16.96 N 13,750,072.8043 E 3,219,812.9781
DELTA = 20° 24′ 51.05" (LT)
DEGREE = 1° 59′ 44.15"
TANGENT = 516.9607
LENGTH = 1,022.9605
RADIUS = 2,871.1082
EXTERNAL = 46.1698
LONG CHORD = 1,017.5582
MID. ORD. = 45.4391
P.C. STATION 200+00.00 N 13,750,089.6440 E 3,219,296.2918
P.T. STATION 210+22.96 N 13,750,237.2444 E 3,220,303.0881
C.C. N 13,752,959.2285 E 3,219,389.8166
BACK = S 88° 07′ 59.84" E
AHEAD = N 71° 27′ 09.11" E
CHORD BEAR = N 81° 39′ 34.63" E

COURSE FROM PT SH_96_1 TO PC SH_96_4 N 71° 27′ 09.11" E DIST 1,099.1108

CURVE DATA

CURVE SH_96_4
P.I. STATION 224+18.01 N 13,750,680.9951 E 3,221,625.6765
DELTA = 11° 46′ 11.31" (LT)
DEGREE = 1° 59′ 44.15"
TANGENT = 295.9357
LENGTH = 589.7885
RADIUS = 2,871.1082
EXTERNAL = 15.2113
LONG CHORD = 588.7521

MID. ORD. = 15.1311
P.C. STATION 221+22.07 N 13,750,586.8608 E 3,221,345.1116
P.T. STATION 227+11.86 N 13,750,830.3798 E 3,221,881.1410
C.C. N 13,753,308.8449 E 3,220,431.8401
BACK = N 71° 27′ 09.11" E
AHEAD = N 59° 40′ 57.80" E
CHORD BEAR = N 65° 34′ 03.45" E

COURSE FROM PT SH_96_4 TO PC SH_96_7 N 59° 40′ 57.80" E DIST 994.6161

CURVE DATA

CURVE SH_96_7
P.I. STATION 244+26.18 N 13,751,695.7464 E 3,223,361.0137
DELTA = 16° 38′ 17.32" (RT)
DEGREE = 1° 09′ 50.76"
TANGENT = 719.7009
LENGTH = 1,429.2725
RADIUS = 4,921.8998
EXTERNAL = 52.3405
LONG CHORD = 1,424.2559
MID. ORD. = 51.7898
P.C. STATION 237+06.48 N 13,751,332.4501 E 3,222,739.7367
P.T. STATION 251+35.75 N 13,751,865.9443 E 3,224,060.3005
C.C. N 13,747,083.6527 E 3,225,224.2525
BACK = N 59° 40′ 57.80" E
AHEAD = N 76° 19′ 15.12" E
CHORD BEAR = N 68° 00′ 06.46" E

COURSE FROM PT SH_96_7 TO PC SH_96_10 N 76° 19′ 15.12" E DIST 552.7168

CURVE DATA

CURVE SH_96_10
P.I. STATION 266+95.10 N 13,752,234.7073 E 3,225,575.4249
DELTA = 28° 40′ 52.81" (LT)
DEGREE = 1° 27′ 18.44"
TANGENT = 1,006.6382
LENGTH = 1,971.0584
RADIUS = 3,937.5198
EXTERNAL = 126.6385
LONG CHORD = 1,950.5430
MID. ORD. = 122.6924
P.C. STATION 256+88.47 N 13,751,996.6532 E 3,224,597.3397
P.T. STATION 276+59.52 N 13,752,912.9728 E 3,226,319.2503
C.C. N 13,755,822.4865 E 3,223,666.1781
BACK = N 76° 19′ 15.12" E
AHEAD = N 47° 38′ 22.31" E
CHORD BEAR = N 61° 58′ 48.72" E

COURSE FROM PT SH_96_10 TO PC SH_96_13 N 47° 38′ 22.31" E DIST 381.8222

CURVE DATA

CURVE SH_96_13
P.I. STATION 283+17.24 N 13,753,356.1396 E 3,226,805.2528
DELTA = 4° 48′ 53.08" (LT)
DEGREE = 0° 52′ 23.07"
TANGENT = 275.8975
LENGTH = 551.4703
RADIUS = 6,562.5330
EXTERNAL = 5.7970
LONG CHORD = 551.3080
MID. ORD. = 5.7919
P.C. STATION 280+41.35 N 13,753,170.2418 E 3,226,601.3865
P.T. STATION 285+92.82 N 13,753,558.4927 E 3,226,992.7966
C.C. N 13,758,019.4313 E 3,222,179.5995
BACK = N 47° 38′ 22.31" E
AHEAD = N 42° 49′ 29.23" E
CHORD BEAR = N 45° 13′ 55.77" E

COURSE FROM PT SH_96_13 TO PC SH_96_16 N 42° 49′ 29.23" E DIST 651.7010

CURVE DATA

CURVE SH_96_16
P.I. STATION 295+20.40 N 13,754,238.8174 E 3,227,623.3310
DELTA = 4° 48′ 52.28" (RT)
DEGREE = 0° 52′ 23.07"
TANGENT = 275.8848
LENGTH = 551.4448
RADIUS = 6,562.5330
EXTERNAL = 5.7965
LONG CHORD = 551.2826
MID. ORD. = 5.7913
P.C. STATION 292+44.52 N 13,754,036.4736 E 3,227,435.7960
P.T. STATION 297+95.96 N 13,754,424.7073 E 3,227,827.1872
C.C. N 13,749,575.5350 E 3,232,248.9931
BACK = N 42° 49′ 29.23" E
AHEAD = N 47° 38′ 21.51" E
CHORD BEAR = N 45° 13′ 55.37" E

COURSE FROM PT SH_96_16 TO PC SH_96_19 N 47° 38′ 21.51" E DIST 1,987.8211

CURVE DATA

CURVE SH_96_19
P.I. STATION 319+99.52 N 13,755,909.4582 E 3,229,455.4388
DELTA = 3° 45′ 56.92" (LT)
DEGREE = 0° 52′ 23.07"
TANGENT = 215.7415
LENGTH = 431.3277
RADIUS = 6,562.5330
EXTERNAL = 3.5453
LONG CHORD = 431.2501
MID. ORD. = 3.5434
P.C. STATION 317+83.78 N 13,755,764.0925 E 3,229,296.0235
P.T. STATION 322+15.11 N 13,756,064.9802 E 3,229,604.9625
C.C. N 13,760,613.2648 E 3,224,874.2176
BACK = N 47° 38′ 21.51" E
AHEAD = N 43° 52′ 24.59" E
CHORD BEAR = N 45° 45′ 23.05" E

COURSE FROM PT SH_96_19 TO PC SH_96_22 N 43° 52′ 24.59" E DIST 803.9427

CURVE DATA

CURVE SH_96_22
P.I. STATION 332+88.91 N 13,756,839.0505 E 3,230,349.1777
DELTA = 3° 46′ 05.86" (RT)
DEGREE = 0° 41′ 54.45"
TANGENT = 269.8549
LENGTH = 539.5152
RADIUS = 8,203.1663
EXTERNAL = 4.4374
LONG CHORD = 539.4180
MID. ORD. = 4.4350
P.C. STATION 330+19.05 N 13,756,644.5197 E 3,230,162.1498
P.T. STATION 335+58.57 N 13,757,020.8689 E 3,230,548.5861
C.C. N 13,750,959.1640 E 3,236,075.5808
BACK = N 43° 52′ 24.59" E
AHEAD = N 47° 38′ 30.45" E
CHORD BEAR = N 45° 45′ 27.52" E

COURSE FROM PT SH_96_22 TO PC SH_96_25 N 47° 38′ 30.45" E DIST 455.2781

CURVE DATA

CURVE SH_96_25
P.I. STATION 342+62.24 N 13,757,494.9799 E 3,231,068.5651
DELTA = 10° 10′ 43.55" (RT)
DEGREE = 2° 03′ 15.45"
TANGENT = 248.3975
LENGTH = 495.4877
RADIUS = 2,789.0765
EXTERNAL = 11.0394
LONG CHORD = 494.8363
MID. ORD. = 10.9959
P.C. STATION 340+13.85 N 13,757,327.6187 E 3,230,885.0125
P.T. STATION 345+09.33 N 13,757,627.2696 E 3,231,278.8048
C.C. N 13,755,266.6390 E 3,232,764.1907
BACK = N 47° 38′ 30.45" E
AHEAD = N 57° 49′ 14.00" E
CHORD BEAR = N 52° 43′ 52.22" E

COURSE FROM PT SH_96_25 TO PC SH_96_28 N 57° 49′ 14.00" E DIST 766.5799

CURVE DATA

CURVE SH_96_28
P.I. STATION 355+70.37 N 13,758,192.3492 E 3,232,176.8504
DELTA = 10° 15′ 21.12" (LT)
DEGREE = 1° 44′ 46.13"
TANGENT = 294.4578
LENGTH = 587.3422
RADIUS = 3,281.2665
EXTERNAL = 13.1857
LONG CHORD = 586.5584
MID. ORD. = 13.1329
P.C. STATION 352+75.91 N 13,758,035.5291 E 3,231,927.6260
P.T. STATION 358+63.26 N 13,758,391.0368 E 3,232,394.1719
C.C. N 13,760,812.7415 E 3,230,180.1132
BACK = N 57° 49′ 14.00" E
AHEAD = N 47° 33′ 52.88" E
CHORD BEAR = N 52° 41′ 33.44" E

COURSE FROM PT SH_96_28 TO PC SH_96_31 N 47° 33′ 52.88" E DIST 4,075.9362

NO.	DATE	REVISION	APPROVED

STATE OF TEXAS
JOHANNA TORRES
130063
LICENSED
PROFESSIONAL ENGINEER
johannatorres
8/1/2023

Texas Department of Transportation
©2023

JONES|CARTER
Texas Board of Professional Engineers Registration No. F-23290
4350 Lockhill Selma Rd, Suite 100 • San Antonio, Texas 78249 • 210.494.5511

SH 96, FM 270
HORIZONTAL
ALIGNMENT DATA

SHEET 02 OF 18

DRAWN	FED.RD. DIV.NO.	FEDERAL AID PROJECT NO.		HIGHWAY NO.
AA	06			FM 270,ETC
DESIGNED	STATE	DIST.	COUNTY	SHEET NO.
JT	TEXAS	HOUSTON	GALVESTON	87
CHECKED	CONT.	SECT.	JOB	
NG	0912	73	215	
APPROVED				
DD				

PLOTDRIVER: LCBF.pltcfg PENTABLE: LCBF.tbl
DATE: 8/1/2023 11:52:30 AM USER: sss
FILE: c:\dms\pwe101-01\stella.staver-scull\dms22646\LCBF_HALN_02.dgn

SH 96 HORIZONTAL ALIGNMENT DATA (CONT)

COURSE FROM PT SH_96_28 TO PC SH_96_31 N 47° 33′ 52.88" E DIST 4,075.9362

	CURVE DATA				
CURVE SH_96_31					
P.I. STATION	407+04.65	N	13,761,657.8059	E	3,235,967.3156
DELTA =	13° 18′ 21.51" (RT)				
DEGREE =	0° 52′ 23.07"				
TANGENT =	765.4620				
LENGTH =	1,524.0372				
RADIUS =	6,562.5330				
EXTERNAL =	44.4914				
LONG CHORD =	1,520.6147				
MID. ORD. =	44.1918				
P.C. STATION	399+39.19	N	13,761,141.3048	E	3,235,402.3744
P.T. STATION	414+63.23	N	13,762,030.4195	E	3,236,635.9643
C.C.		N	13,756,297.8953	E	3,239,830.4919

BACK = N 47° 33′ 52.88" E
AHEAD = N 60° 52′ 14.39" E
CHORD BEAR = N 54° 13′ 03.63" E

COURSE FROM PT SH_96_31 TO 63 N 60° 52′ 14.39" E DIST 528.3463

POINT 63 N 13,762,287.6094 E 3,237,097.4871 STA 419+91.58

ENDING CHAIN SH_96 DESCRIPTION

SH 96 SIDE PATH HORIZONTAL ALIGNMENT DATA

BEGINNING CHAIN SUP_96 DESCRIPTION
FEATURE: CRE

POINT 70 N 13,750,418.2417 E 3,221,080.4744 STA 10+00.00

COURSE FROM 70 TO PC SUP_961 S 66° 08′ 31.07" E DIST 35.2537

	CURVE DATA				
CURVE SUP_961					
P.I. STATION	10+43.08	N	13,750,400.8164	E	3,221,119.8745
DELTA =	11° 10′ 36.36" (RT)				
DEGREE =	71° 37′ 11.01"				
TANGENT =	7.8277				
LENGTH =	15.6057				
RADIUS =	80.0000				
EXTERNAL =	0.3820				
LONG CHORD =	15.5810				
MID. ORD. =	0.3802				
P.C. STATION	10+35.25	N	13,750,403.9825	E	3,221,112.7157
P.T. STATION	10+50.86	N	13,750,396.3228	E	3,221,126.2839
C.C.		N	13,750,330.8185	E	3,221,080.3580

BACK = S 66° 08′ 31.07" E
AHEAD = S 54° 57′ 54.71" E
CHORD BEAR = S 60° 33′ 12.89" E

COURSE FROM PT SUP_961 TO PC SUP_962 S 54° 57′ 54.71" E DIST 14.3496

	CURVE DATA				
CURVE SUP_962					
P.I. STATION	11+10.03	N	13,750,362.3533	E	3,221,174.7346
DELTA =	58° 31′ 21.66" (LT)				
DEGREE =	71° 37′ 11.01"				
TANGENT =	44.8230				
LENGTH =	81.7131				
RADIUS =	80.0000				
EXTERNAL =	11.7011				
LONG CHORD =	78.2070				
MID. ORD. =	10.2081				
P.C. STATION	10+65.21	N	13,750,388.0850	E	3,221,138.0334
P.T. STATION	11+46.92	N	13,750,380.2177	E	3,221,215.8437
C.C.		N	13,750,453.5893	E	3,221,183.9593

BACK = S 54° 57′ 54.71" E
AHEAD = N 66° 30′ 43.63" E
CHORD BEAR = S 84° 13′ 35.54" E

	CURVE DATA				
CURVE SUP_963					
P.I. STATION	11+59.69	N	13,750,385.3071	E	3,221,227.5552
DELTA =	16° 53′ 42.27" (RT)				
DEGREE =	66° 38′ 14.83"				
TANGENT =	12.7695				
LENGTH =	25.3537				
RADIUS =	85.9813				
EXTERNAL =	0.9431				
LONG CHORD =	25.2620				
MID. ORD. =	0.9328				
P.C. STATION	11+46.92	N	13,750,380.2177	E	3,221,215.8437
P.T. STATION	11+72.28	N	13,750,386.7732	E	3,221,240.2403
C.C.		N	13,750,301.3604	E	3,221,250.1120

BACK = N 66° 30′ 43.63" E
AHEAD = N 83° 24′ 25.91" E
CHORD BEAR = N 74° 57′ 34.77" E

COURSE FROM PT SUP_963 TO PC SUP_964 N 81° 59′ 51.87" E DIST 0.4660

	CURVE DATA				
CURVE SUP_964					
P.I. STATION	11+80.80	N	13,750,387.8989	E	3,221,248.6918
DELTA =	11° 30′ 23.57" (LT)				
DEGREE =	71° 37′ 11.01"				
TANGENT =	8.0602				
LENGTH =	16.0662				
RADIUS =	80.0000				
EXTERNAL =	0.4050				
LONG CHORD =	16.0392				
MID. ORD. =	0.4030				
P.C. STATION	11+72.74	N	13,750,386.8381	E	3,221,240.7017
P.T. STATION	11+88.81	N	13,750,390.5322	E	3,221,256.3097
C.C.		N	13,750,466.1422	E	3,221,230.1729

BACK = N 82° 26′ 14.29" E
AHEAD = N 70° 55′ 50.72" E
CHORD BEAR = N 76° 41′ 02.51" E

COURSE FROM PT SUP_964 TO PC SUP_965 N 70° 55′ 50.72" E DIST 104.4463

	CURVE DATA				
CURVE SUP_965					
P.I. STATION	13+06.42	N	13,750,428.8946	E	3,221,367.4887
DELTA =	15° 00′ 00.00" (LT)				
DEGREE =	57° 17′ 44.81"				
TANGENT =	13.1652				
LENGTH =	26.1799				
RADIUS =	100.0000				
EXTERNAL =	0.8629				
LONG CHORD =	26.1052				
MID. ORD. =	0.8555				
P.C. STATION	12+93.25	N	13,750,424.6559	E	3,221,355.0245
P.T. STATION	13+19.43	N	13,750,436.2149	E	3,221,378.4312
C.C.		N	13,750,519.3313	E	3,221,322.8285

BACK = N 71° 13′ 06.55" E
AHEAD = N 56° 13′ 06.55" E
CHORD BEAR = N 63° 43′ 06.55" E

COURSE FROM PT SUP_965 TO PC SUP_966 N 56° 13′ 06.55" E DIST 16.2211

	CURVE DATA				
CURVE SUP_966					
P.I. STATION	13+48.82	N	13,750,452.5545	E	3,221,402.8560
DELTA =	15° 00′ 00.00" (RT)				
DEGREE =	57° 17′ 44.81"				
TANGENT =	13.1652				
LENGTH =	26.1799				
RADIUS =	100.0000				
EXTERNAL =	0.8629				
LONG CHORD =	26.1052				
MID. ORD. =	0.8555				
P.C. STATION	13+35.66	N	13,750,445.2342	E	3,221,391.9136
P.T. STATION	13+61.84	N	13,750,456.7932	E	3,221,415.3203
C.C.		N	13,750,362.1178	E	3,221,447.5163

BACK = N 56° 13′ 06.55" E
AHEAD = N 71° 13′ 06.55" E
CHORD BEAR = N 63° 43′ 06.55" E

COURSE FROM PT SUP_966 TO PC SUP_967 N 71° 13′ 06.55" E DIST 269.7536

	CURVE DATA				
CURVE SUP_967					
P.I. STATION	16+42.19	N	13,750,547.0550	E	3,221,680.7433
DELTA =	11° 15′ 48.78" (RT)				
DEGREE =	53° 18′ 56.99"				
TANGENT =	10.5972				
LENGTH =	21.1261				
RADIUS =	107.4649				
EXTERNAL =	0.5212				
LONG CHORD =	21.0921				
MID. ORD. =	0.5187				
P.C. STATION	16+31.59	N	13,750,543.6431	E	3,221,670.7104
P.T. STATION	16+52.71	N	13,750,548.4415	E	3,221,691.2494
C.C.		N	13,750,441.9004	E	3,221,705.3098

BACK = N 71° 13′ 06.55" E
AHEAD = N 82° 28′ 55.33" E
CHORD BEAR = N 76° 51′ 00.94" E

COURSE FROM PT SUP_967 TO PC SUP_968 N 82° 28′ 55.33" E DIST 30.6825

	CURVE DATA				
CURVE SUP_968					
P.I. STATION	16+95.64	N	13,750,554.0574	E	3,221,733.8031
DELTA =	34° 01′ 42.33" (LT)				
DEGREE =	143° 14′ 22.02"				
TANGENT =	12.2401				
LENGTH =	23.7563				
RADIUS =	40.0000				
EXTERNAL =	1.8308				
LONG CHORD =	23.4087				
MID. ORD. =	1.7507				
P.C. STATION	16+83.40	N	13,750,552.4559	E	3,221,721.6682
P.T. STATION	17+07.15	N	13,750,562.1753	E	3,221,742.9638
C.C.		N	13,750,592.1121	E	3,221,716.4347

BACK = N 82° 28′ 55.33" E
AHEAD = N 48° 27′ 13.00" E
CHORD BEAR = N 65° 28′ 04.16" E

NO.	DATE	REVISION	APPROVED

STATE OF TEXAS
JOHANNA TORRES
130063
LICENSED
PROFESSIONAL ENGINEER
johannatorres
8/1/2023

Texas Department of Transportation
©2023

JONES|CARTER
Texas Board of Professional Engineers Registration No. F-23290
4350 Lockhill Selma Rd, Suite 200 • San Antonio, Texas 78249 • 210.494.5511

SH 96, FM 270 HORIZONTAL ALIGNMENT DATA

SHEET **03** OF **18**

DRAWN	FED. RD. DIV. NO.	FEDERAL AID PROJECT NO.		HIGHWAY NO.
AA	06			FM 270, ETC
DESIGNED	STATE	DIST.	COUNTY	SHEET NO.
JT	TEXAS	HOUSTON	GALVESTON	88
CHECKED	CONT.	SECT.	JOB	
NG	0912	73	215	
APPROVED				
DD				

PLOTDRIVER: LCBF.pltcfg
PENTABLE: LCBF.tbl
USER: sss
DATE: 8/1/2023 11:52:35 AM
FILE: c:\bms\pwe101-01\stella.staver-scull\dms22646\LCBF_HALN_03.dgn

SH 96 SIDE PATH HORIZONTAL ALIGNMENT DATA (CONT)

CURVE DATA

CURVE SUP_969				
P.I. STATION	17+41.14 N	13,750,584.7142 E	3,221,768.3978	
DELTA =	16° 48′ 22.93" (RT)			
DEGREE =	24° 54′ 21.29"			
TANGENT =	33.9837			
LENGTH =	67.4794			
RADIUS =	230.0489			
EXTERNAL =	2.4966			
LONG CHORD =	67.2378			
MID. ORD. =	2.4698			
P.C. STATION	17+07.15 N	13,750,562.1753 E	3,221,742.9638	
P.T. STATION	17+74.63 N	13,750,598.9364 E	3,221,799.2624	
C.C.	N	13,750,390.0023 E	3,221,895.5382	
BACK = N	48° 27′ 13.00" E			
AHEAD = N	65° 15′ 35.93" E			
CHORD BEAR = N	56° 51′ 24.46" E			

CURVE DATA

CURVE SUP_9610				
P.I. STATION	17+91.22 N	13,750,605.8788 E	3,221,814.3284	
DELTA =	10° 54′ 17.73" (RT)			
DEGREE =	32° 58′ 06.43"			
TANGENT =	16.5885			
LENGTH =	33.0768			
RADIUS =	173.7897			
EXTERNAL =	0.7899			
LONG CHORD =	33.0269			
MID. ORD. =	0.7863			
P.C. STATION	17+74.63 N	13,750,598.9364 E	3,221,799.2624	
P.T. STATION	18+07.71 N	13,750,609.8456 E	3,221,830.4356	
C.C.	N	13,750,441.0978 E	3,221,871.9937	
BACK = N	65° 15′ 35.93" E			
AHEAD = N	76° 09′ 53.66" E			
CHORD BEAR = N	70° 42′ 44.79" E			

CURVE DATA

CURVE SUP_9611				
P.I. STATION	18+27.62 N	13,750,614.6062 E	3,221,849.7663	
DELTA =	27° 56′ 55.42" (LT)			
DEGREE =	71° 37′ 10.96"			
TANGENT =	19.9082			
LENGTH =	39.0238			
RADIUS =	80.0000			
EXTERNAL =	2.4399			
LONG CHORD =	38.6380			
MID. ORD. =	2.3677			
P.C. STATION	18+07.71 N	13,750,609.8456 E	3,221,830.4356	
P.T. STATION	18+46.73 N	13,750,627.8715 E	3,221,864.6111	
C.C.	N	13,750,687.5246 E	3,221,811.3054	
BACK = N	76° 09′ 53.66" E			
AHEAD = N	48° 12′ 58.23" E			
CHORD BEAR = N	62° 11′ 25.95" E			

CURVE DATA

CURVE SUP_9612				
P.I. STATION	18+82.65 N	13,750,651.8040 E	3,221,891.3935	
DELTA =	39° 30′ 50.14" (RT)			
DEGREE =	57° 17′ 44.83"			
TANGENT =	35.9174			
LENGTH =	68.9648			
RADIUS =	100.0000			
EXTERNAL =	6.2547			
LONG CHORD =	67.6062			
MID. ORD. =	5.8865			
P.C. STATION	18+46.73 N	13,750,627.8715 E	3,221,864.6111	
P.T. STATION	19+15.70 N	13,750,653.2266 E	3,221,927.2827	
C.C.	N	13,750,553.3051 E	3,221,931.2433	
BACK = N	48° 12′ 58.23" E			
AHEAD = N	87° 43′ 48.38" E			
CHORD BEAR = N	67° 58′ 23.31" E			

CURVE DATA

CURVE SUP_9613				
P.I. STATION	19+47.38 N	13,750,654.4813 E	3,221,958.9373	
DELTA =	59° 52′ 59.10" (LT)			
DEGREE =	104° 10′ 26.92"			
TANGENT =	31.6795			
LENGTH =	57.4836			
RADIUS =	55.0000			
EXTERNAL =	8.4712			
LONG CHORD =	54.9028			
MID. ORD. =	7.3406			
P.C. STATION	19+15.70 N	13,750,653.2266 E	3,221,927.2827	
P.T. STATION	19+73.18 N	13,750,682.4922 E	3,221,973.7352	
C.C.	N	13,750,708.1834 E	3,221,925.1043	
BACK = N	87° 43′ 48.38" E			
AHEAD = N	27° 50′ 49.28" E			
CHORD BEAR = N	57° 47′ 18.83" E			

COURSE FROM PT SUP_9613 TO PC SUP_9614 N 27° 50′ 49.28" E DIST 52.1821

CURVE DATA

CURVE SUP_9614				
P.I. STATION	20+33.81 N	13,750,736.0959 E	3,222,002.0534	
DELTA =	12° 02′ 51.71" (RT)			
DEGREE =	71° 37′ 11.01"			
TANGENT =	8.4420			
LENGTH =	16.8218			
RADIUS =	80.0000			
EXTERNAL =	0.4442			
LONG CHORD =	16.7908			
MID. ORD. =	0.4417			
P.C. STATION	20+25.36 N	13,750,728.6315 E	3,221,998.1101	
P.T. STATION	20+42.19 N	13,750,742.5728 E	3,222,007.4680	
C.C.	N	13,750,691.2625 E	3,222,068.8459	
BACK = N	27° 50′ 49.28" E			
AHEAD = N	39° 53′ 40.99" E			
CHORD BEAR = N	33° 52′ 15.14" E			

COURSE FROM PT SUP_9614 TO PC SUP_9615 N 39° 53′ 41.00" E DIST 10.6877

CURVE DATA

CURVE SUP_9615				
P.I. STATION	20+89.10 N	13,750,778.5644 E	3,222,037.5559	
DELTA =	18° 42′ 00.23" (RT)			
DEGREE =	26° 02′ 36.73"			
TANGENT =	36.2237			
LENGTH =	71.8031			
RADIUS =	220.0000			
EXTERNAL =	2.9622			
LONG CHORD =	71.4848			
MID. ORD. =	2.9229			
P.C. STATION	20+52.87 N	13,750,750.7727 E	3,222,014.3228	
P.T. STATION	21+24.68 N	13,750,797.4401 E	3,222,068.4730	
C.C.	N	13,750,609.6694 E	3,222,183.1122	
BACK = N	39° 53′ 40.99" E			
AHEAD = N	58° 35′ 41.22" E			
CHORD BEAR = N	49° 14′ 41.11" E			

COURSE FROM PT SUP_9615 TO PC SUP_9616 N 58° 16′ 33.09" E DIST 418.8441

CURVE DATA

CURVE SUP_9616				
P.I. STATION	25+52.09 N	13,751,022.2508 E	3,222,431.9918	
DELTA =	2° 53′ 20.55" (RT)			
DEGREE =	16° 51′ 06.12"			
TANGENT =	8.5738			
LENGTH =	17.1439			
RADIUS =	340.0000			
EXTERNAL =	0.1081			
LONG CHORD =	17.1421			
MID. ORD. =	0.1081			
P.C. STATION	25+43.52 N	13,751,017.6810 E	3,222,424.7374	
P.T. STATION	25+60.67 N	13,751,026.4493 E	3,222,439.4673	
C.C.	N	13,750,730.0035 E	3,222,605.9602	
BACK = N	57° 47′ 27.86" E			
AHEAD = N	60° 40′ 48.41" E			
CHORD BEAR = N	59° 14′ 08.14" E			

COURSE FROM PT SUP_9616 TO PC SUP_9617 N 60° 34′ 44.47" E DIST 372.5250

CURVE DATA

CURVE SUP_9617				
P.I. STATION	29+51.51 N	13,751,218.2169 E	3,222,780.0264	
DELTA =	6° 10′ 01.61" (RT)			
DEGREE =	16° 51′ 06.12"			
TANGENT =	18.3159			
LENGTH =	36.5964			
RADIUS =	340.0000			
EXTERNAL =	0.4930			
LONG CHORD =	36.5787			
MID. ORD. =	0.4923			
P.C. STATION	29+33.19 N	13,751,209.4421 E	3,222,763.9492	
P.T. STATION	29+69.79 N	13,751,225.2137 E	3,222,796.9531	
C.C.	N	13,750,911.0001 E	3,222,926.8369	
BACK = N	61° 22′ 28.45" E			
AHEAD = N	67° 32′ 30.06" E			
CHORD BEAR = N	64° 27′ 29.25" E			

COURSE FROM PT SUP_9617 TO PC SUP_9618 N 67° 32′ 30.06" E DIST 83.6036

CURVE DATA

CURVE SUP_9618				
P.I. STATION	30+83.70 N	13,751,268.7294 E	3,222,902.2257	
DELTA =	30° 48′ 32.35" (LT)			
DEGREE =	52° 05′ 13.46"			
TANGENT =	30.3083			
LENGTH =	59.1490			
RADIUS =	110.0000			
EXTERNAL =	4.0991			
LONG CHORD =	58.4390			
MID. ORD. =	3.9518			
P.C. STATION	30+53.39 N	13,751,257.1512 E	3,222,874.2160	
P.T. STATION	31+12.54 N	13,751,293.0195 E	3,222,920.3526	
C.C.	N	13,751,358.8086 E	3,222,832.1948	
BACK = N	67° 32′ 30.06" E			
AHEAD = N	36° 43′ 57.70" E			
CHORD BEAR = N	52° 08′ 13.88" E			

CURVE DATA

CURVE SUP_9619				
P.I. STATION	31+58.43 N	13,751,329.7988 E	3,222,947.7997	
DELTA =	25° 50′ 48.03" (RT)			
DEGREE =	28° 38′ 52.41"			
TANGENT =	45.8919			
LENGTH =	90.2219			
RADIUS =	200.0000			
EXTERNAL =	5.1976			
LONG CHORD =	89.4588			
MID. ORD. =	5.0660			
P.C. STATION	31+12.54 N	13,751,293.0195 E	3,222,920.3526	
P.T. STATION	32+02.76 N	13,751,350.9329 E	3,222,988.5356	
C.C.	N	13,751,173.4030 E	3,223,080.6395	
BACK = N	36° 43′ 57.70" E			
AHEAD = N	62° 34′ 45.73" E			
CHORD BEAR = N	49° 39′ 21.72" E			

COURSE FROM PT SUP_9619 TO PC SUP_9620 N 62° 34′ 45.73" E DIST 73.6356

CURVE DATA

CURVE SUP_9620				
P.I. STATION	33+18.02 N	13,751,404.2358 E	3,223,090.7271	
DELTA =	5° 07′ 30.57" (RT)			
DEGREE =	6° 09′ 39.01"			
TANGENT =	41.6224			
LENGTH =	83.1893			
RADIUS =	930.0000			
EXTERNAL =	0.9309			
LONG CHORD =	83.1616			
MID. ORD. =	0.9300			
P.C. STATION	32+76.40 N	13,751,384.8435 E	3,223,053.8982	
P.T. STATION	33+59.59 N	13,751,420.2605 E	3,223,129.1410	
C.C.	N	13,750,561.9491 E	3,223,487.1935	
BACK = N	62° 13′ 51.37" E			
AHEAD = N	67° 21′ 21.94" E			
CHORD BEAR = N	64° 47′ 36.66" E			

NO.	DATE	REVISION	APPROVED

STATE OF TEXAS
JOHANNA TORRES
130063
LICENSED PROFESSIONAL ENGINEER
johannatorres
8/1/2023

Texas Department of Transportation
©2023

JONES|CARTER
Texas Board of Professional Engineers Registration No. F-23290
4350 Lockhill Selma Rd, Suite 100 • San Antonio, Texas 78249 • 210.494.5511

SH 96, FM 270
HORIZONTAL
ALIGNMENT DATA

SHEET 04 OF 18

DRAWN	FED.RD. DIV.NO.	FEDERAL AID PROJECT NO.		HIGHWAY NO.
AA	06			FM 270, ETC
DESIGNED	STATE	DIST.	COUNTY	SHEET NO.
JT	TEXAS	HOUSTON	GALVESTON	89
CHECKED	CONT.	SECT.	JOB	
NG	0912	73	215	
APPROVED				
DD				

PLOTDRIVER: LCBF.pltcfg PENTABLE: LCBF.tbl
DATE: 8/1/2023 11:52:37 AM USER: sss
FILE: c:\bms\pwe101-01\stella.stover-scull\dms22646\LCBF_HALN_04.dgn

SH 96 SIDE PATH HORIZONTAL ALIGNMENT DATA (CONT)

CURVE DATA

CURVE SUP_9621				
P.I. STATION	33+99.92 N	13,751,435.7909 E	3,223,166.3700	
DELTA =	4° 58′ 02.11" (LT)			
DEGREE =	6° 09′ 39.01"			
TANGENT =	40.3384			
LENGTH =	80.6263			
RADIUS =	930.0000			
EXTERNAL =	0.8744			
LONG CHORD =	80.6010			
MID. ORD. =	0.8736			
P.C. STATION	33+59.59 N	13,751,420.2605 E	3,223,129.1410	
P.T. STATION	34+40.21 N	13,751,454.4865 E	3,223,202.1143	
C.C.	N	13,752,278.5719 E	3,222,771.0886	
BACK = N	67° 21′ 21.94" E			
AHEAD = N	62° 23′ 19.84" E			
CHORD BEAR = N	64° 52′ 20.89" E			

COURSE FROM PT SUP_9621 TO PC SUP_9622 N 62° 23′ 19.84" E DIST 69.8541

CURVE DATA

CURVE SUP_9622				
P.I. STATION	36+01.45 N	13,751,529.2146 E	3,223,344.9882	
DELTA =	5° 37′ 31.43" (RT)			
DEGREE =	3° 04′ 49.51"			
TANGENT =	91.3824			
LENGTH =	182.6180			
RADIUS =	1,860.0000			
EXTERNAL =	2.2435			
LONG CHORD =	182.5447			
MID. ORD. =	2.2408			
P.C. STATION	35+10.07 N	13,751,486.8617 E	3,223,264.0130	
P.T. STATION	36+92.68 N	13,751,563.4260 E	3,223,429.7250	
C.C.	N	13,749,838.6908 E	3,224,126.0646	
BACK = N	62° 23′ 19.84" E			
AHEAD = N	68° 00′ 51.27" E			
CHORD BEAR = N	65° 12′ 05.55" E			

COURSE FROM PT SUP_9622 TO PC SUP_9623 N 68° 00′ 51.27" E DIST 17.1873

CURVE DATA

CURVE SUP_9623				
P.I. STATION	38+14.17 N	13,751,608.9083 E	3,223,542.3783	
DELTA =	3° 58′ 56.63" (RT)			
DEGREE =	1° 54′ 35.49"			
TANGENT =	104.3009			
LENGTH =	208.5179			
RADIUS =	3,000.0000			
EXTERNAL =	1.8126			
LONG CHORD =	208.4759			
MID. ORD. =	1.8115			
P.C. STATION	37+09.87 N	13,751,569.8605 E	3,223,445.6624	
P.T. STATION	39+18.39 N	13,751,641.1448 E	3,223,641.5725	
C.C.	N	13,748,788.0297 E	3,224,568.7908	
BACK = N	68° 00′ 51.27" E			
AHEAD = N	71° 59′ 47.90" E			
CHORD BEAR = N	70° 00′ 19.59" E			

COURSE FROM PT SUP_9623 TO PC SUP_9624 N 71° 43′ 05.04" E DIST 152.2158

CURVE DATA

CURVE SUP_9624				
P.I. STATION	41+02.79 N	13,751,699.0581 E	3,223,816.6440	
DELTA =	2° 14′ 06.05" (RT)			
DEGREE =	3° 28′ 20.90"			
TANGENT =	32.1860			
LENGTH =	64.3638			
RADIUS =	1,650.0000			
EXTERNAL =	0.3139			
LONG CHORD =	64.3597			
MID. ORD. =	0.3138			
P.C. STATION	40+70.61 N	13,751,688.8939 E	3,223,786.1051	
P.T. STATION	41+34.97 N	13,751,708.0236 E	3,223,847.5560	
C.C.	N	13,750,123.3298 E	3,224,307.1704	
BACK = N	71° 35′ 27.79" E			
AHEAD = N	73° 49′ 33.84" E			
CHORD BEAR = N	72° 42′ 30.82" E			

COURSE FROM PT SUP_9624 TO PC SUP_9625 N 73° 49′ 33.84" E DIST 77.0792

CURVE DATA

CURVE SUP_9625				
P.I. STATION	42+47.55 N	13,751,740.2317 E	3,223,955.4218	
DELTA =	0° 04′ 31.77" (LT)			
DEGREE =	0° 06′ 22.77"			
TANGENT =	35.5001			
LENGTH =	71.0001			
RADIUS =	53,887.0223			
EXTERNAL =	0.0117			
LONG CHORD =	71.0001			
MID. ORD. =	0.0117			
P.C. STATION	42+12.05 N	13,751,729.4944 E	3,223,921.5845	
P.T. STATION	42+83.05 N	13,751,751.0135 E	3,223,989.2450	
C.C.	N	13,803,092.5867 E	3,207,622.9983	
BACK = N	72° 23′ 40.83" E			
AHEAD = N	72° 19′ 09.06" E			
CHORD BEAR = N	72° 21′ 24.95" E			

COURSE FROM PT SUP_9625 TO PC SUP_9626 N 74° 26′ 03.45" E DIST 77.0245

CURVE DATA

CURVE SUP_9626				
P.I. STATION	44+48.20 N	13,751,795.3308 E	3,224,148.3391	
DELTA =	3° 49′ 48.93" (RT)			
DEGREE =	2° 10′ 26.26"			
TANGENT =	88.1268			
LENGTH =	176.1880			
RADIUS =	2,635.5465			
EXTERNAL =	1.4730			
LONG CHORD =	176.1552			
MID. ORD. =	1.4721			
P.C. STATION	43+60.07 N	13,751,771.6825 E	3,224,063.4445	
P.T. STATION	45+36.26 N	13,751,813.2552 E	3,224,234.6238	
C.C.	N	13,749,232.7991 E	3,224,770.6758	
BACK = N	74° 26′ 03.45" E			
AHEAD = N	78° 15′ 52.38" E			
CHORD BEAR = N	76° 20′ 57.91" E			

COURSE FROM PT SUP_9626 TO PC SUP_9627 N 78° 44′ 11.75" E DIST 422.9547

CURVE DATA

CURVE SUP_9627				
P.I. STATION	49+75.74 N	13,751,898.6587 E	3,224,665.7198	
DELTA =	10° 29′ 26.98" (LT)			
DEGREE =	31° 49′ 51.56"			
TANGENT =	16.5251			
LENGTH =	32.9579			
RADIUS =	180.0000			
EXTERNAL =	0.7570			
LONG CHORD =	32.9119			
MID. ORD. =	0.7538			
P.C. STATION	49+59.22 N	13,751,895.8666 E	3,224,649.4322	
P.T. STATION	49+92.17 N	13,751,904.3698 E	3,224,681.2267	
C.C.	N	13,752,073.2786 E	3,224,619.0188	
BACK = N	80° 16′ 20.71" E			
AHEAD = N	69° 46′ 53.74" E			
CHORD BEAR = N	75° 01′ 37.22" E			

COURSE FROM PT SUP_9627 TO PC SUP_9628 N 69° 46′ 53.74" E DIST 71.7249

CURVE DATA

CURVE SUP_9628				
P.I. STATION	50+82.22 N	13,751,935.4888 E	3,224,765.7219	
DELTA =	25° 47′ 41.33" (RT)			
DEGREE =	71° 37′ 11.01"			
TANGENT =	18.3186			
LENGTH =	36.0164			
RADIUS =	80.0000			
EXTERNAL =	2.0705			
LONG CHORD =	35.7130			
MID. ORD. =	2.0183			
P.C. STATION	50+63.90 N	13,751,929.1579 E	3,224,748.5321	
P.T. STATION	50+99.91 N	13,751,933.7088 E	3,224,783.9539	
C.C.	N	13,751,854.0874 E	3,224,776.1800	
BACK = N	69° 46′ 53.74" E			
AHEAD = S	84° 25′ 24.93" E			
CHORD BEAR = N	82° 40′ 44.40" E			

COURSE FROM PT SUP_9628 TO PC SUP_9629 S 84° 25′ 24.93" E DIST 33.3354

CURVE DATA

CURVE SUP_9629				
P.I. STATION	51+55.52 N	13,751,928.3051 E	3,224,839.2991	
DELTA =	21° 55′ 20.79" (LT)			
DEGREE =	49° 49′ 20.70"			
TANGENT =	22.2730			
LENGTH =	44.0012			
RADIUS =	115.0000			
EXTERNAL =	2.1370			
LONG CHORD =	43.7333			
MID. ORD. =	2.0980			
P.C. STATION	51+33.25 N	13,751,930.4695 E	3,224,817.1315	
P.T. STATION	51+77.25 N	13,751,934.5736 E	3,224,860.6718	
C.C.	N	13,752,044.9252 E	3,224,828.3064	
BACK = S	84° 25′ 24.93" E			
AHEAD = N	73° 39′ 14.28" E			
CHORD BEAR = N	84° 36′ 54.67" E			

CURVE DATA

CURVE SUP_9630				
P.I. STATION	51+87.00 N	13,751,937.3179 E	3,224,870.0287	
DELTA =	13° 05′ 18.56" (RT)			
DEGREE =	67° 24′ 24.46"			
TANGENT =	9.7510			
LENGTH =	19.4172			
RADIUS =	85.0000			
EXTERNAL =	0.5575			
LONG CHORD =	19.3750			
MID. ORD. =	0.5538			
P.C. STATION	51+77.25 N	13,751,934.5736 E	3,224,860.6718	
P.T. STATION	51+96.67 N	13,751,937.8720 E	3,224,879.7639	
C.C.	N	13,751,853.0093 E	3,224,884.5940	
BACK = N	73° 39′ 14.28" E			
AHEAD = N	86° 44′ 32.83" E			
CHORD BEAR = N	80° 11′ 53.55" E			

COURSE FROM PT SUP_9630 TO PC SUP_9631 N 86° 44′ 32.83" E DIST 35.1449

NO.	DATE	REVISION	APPROVED

STATE OF TEXAS
JOHANNA TORRES
130063
LICENSED
PROFESSIONAL ENGINEER
johannatorres
8/1/2023

Texas Department of Transportation
©2023

JONES|CARTER
Texas Board of Professional Engineers Registration No. F-23290
4350 Lockhill Selma Rd, Suite 100 • San Antonio, Texas 78249 • 210.494.5511

SH 96, FM 270
HORIZONTAL
ALIGNMENT DATA

SHEET **05** OF **18**

DRAWN	FED.RD. DIV.NO.	FEDERAL AID PROJECT NO.		HIGHWAY NO.
AA	06			FM 270, ETC
DESIGNED	STATE	DIST.	COUNTY	SHEET NO.
JT	TEXAS	HOUSTON	GALVESTON	90
CHECKED	CONT.	SECT.	JOB	
NG	0912	73	215	
APPROVED				
DD				

PLOTDRIVER: LCBF.pltcfg PENTABLE: LCBF.tbl
DATE: 8/1/2023 11:52:40 AM USER: sss
FILE: c:\bms\pwe101-01\stela.staver-scull\dms22646\LCBF_HALN_05.dgn

SH 96 SIDE PATH HORIZONTAL ALIGNMENT DATA (CONT)

CURVE DATA

CURVE SUP_9631				
P.I. STATION	52+50.83 N	13,751,940.9499 E	3,224,933.8425	
DELTA =	41° 39′ 21.33" (LT)			
DEGREE =	114° 35′ 29.61"			
TANGENT =	19.0211			
LENGTH =	36.3517			
RADIUS =	50.0000			
EXTERNAL =	3.4958			
LONG CHORD =	35.5563			
MID. ORD. =	3.2674			
P.C. STATION	52+31.81 N	13,751,939.8691 E	3,224,914.8521	
P.T. STATION	52+68.16 N	13,751,954.3796 E	3,224,947.3127	
C.C.	N	13,751,989.7883 E	3,224,912.0108	
BACK = N	86° 44′ 32.83" E			
AHEAD = N	45° 05′ 11.51" E			
CHORD BEAR = N	65° 54′ 52.17" E			

COURSE FROM PT SUP_9631 TO PC SUP_9632 N 45° 05′ 11.51" E DIST 10.3951

CURVE DATA

CURVE SUP_9632				
P.I. STATION	53+07.66 N	13,751,982.2654 E	3,224,975.2830	
DELTA =	27° 15′ 47.69" (RT)			
DEGREE =	47° 44′ 47.34"			
TANGENT =	29.1012			
LENGTH =	57.1000			
RADIUS =	120.0000			
EXTERNAL =	3.4783			
LONG CHORD =	56.5628			
MID. ORD. =	3.3803			
P.C. STATION	52+78.56 N	13,751,961.7189 E	3,224,954.6743	
P.T. STATION	53+35.66 N	13,751,991.0891 E	3,225,003.0142	
C.C.	N	13,751,876.7380 E	3,225,039.3988	
BACK = N	45° 05′ 11.51" E			
AHEAD = N	72° 20′ 59.20" E			
CHORD BEAR = N	58° 43′ 05.35" E			

COURSE FROM PT SUP_9632 TO PC SUP_9633 N 72° 20′ 59.20" E DIST 47.4398

CURVE DATA

CURVE SUP_9633				
P.I. STATION	54+04.18 N	13,752,011.8633 E	3,225,068.3043	
DELTA =	12° 01′ 51.83" (LT)			
DEGREE =	28° 38′ 52.40"			
TANGENT =	21.0757			
LENGTH =	41.9963			
RADIUS =	200.0000			
EXTERNAL =	1.1074			
LONG CHORD =	41.9192			
MID. ORD. =	1.1013			
P.C. STATION	53+83.10 N	13,752,005.4731 E	3,225,048.2207	
P.T. STATION	54+25.10 N	13,752,022.2995 E	3,225,086.6147	
C.C.	N	13,752,196.0581 E	3,224,987.5797	
BACK = N	72° 20′ 59.20" E			
AHEAD = N	60° 19′ 07.37" E			
CHORD BEAR = N	66° 20′ 03.28" E			

COURSE FROM PT SUP_9633 TO PC SUP_9634 N 60° 19′ 07.37" E DIST 27.7620

CURVE DATA

CURVE SUP_9634				
P.I. STATION	54+76.70 N	13,752,047.8546 E	3,225,131.4516	
DELTA =	16° 57′ 13.89" (RT)			
DEGREE =	35° 48′ 35.50"			
TANGENT =	23.8463			
LENGTH =	47.3441			
RADIUS =	160.0000			
EXTERNAL =	1.7673			
LONG CHORD =	47.1716			
MID. ORD. =	1.7480			
P.C. STATION	54+52.86 N	13,752,036.0465 E	3,225,110.7341	
P.T. STATION	55+00.20 N	13,752,053.1082 E	3,225,154.7120	
C.C.	N	13,751,897.0396 E	3,225,189.9621	
BACK = N	60° 19′ 07.37" E			
AHEAD = N	77° 16′ 21.26" E			
CHORD BEAR = N	68° 47′ 44.32" E			

COURSE FROM PT SUP_9634 TO PC SUP_9635 N 77° 16′ 21.26" E DIST 24.3131

CURVE DATA

CURVE SUP_9635				
P.I. STATION	55+46.19 N	13,752,063.2397 E	3,225,199.5686	
DELTA =	13° 43′ 53.93" (LT)			
DEGREE =	31° 49′ 51.56"			
TANGENT =	21.6735			
LENGTH =	43.1392			
RADIUS =	180.0000			
EXTERNAL =	1.3001			
LONG CHORD =	43.0361			
MID. ORD. =	1.2908			
P.C. STATION	55+24.52 N	13,752,058.4647 E	3,225,178.4277	
P.T. STATION	55+67.65 N	13,752,072.8965 E	3,225,218.9718	
C.C.	N	13,752,234.0420 E	3,225,138.7713	
BACK = N	77° 16′ 21.26" E			
AHEAD = N	63° 32′ 27.33" E			
CHORD BEAR = N	70° 24′ 24.30" E			

COURSE FROM PT SUP_9635 TO PC SUP_9636 N 63° 32′ 27.33" E DIST 38.4693

CURVE DATA

CURVE SUP_9636				
P.I. STATION	56+13.82 N	13,752,093.4649 E	3,225,260.2997	
DELTA =	4° 53′ 42.67" (LT)			
DEGREE =	31° 49′ 51.56"			
TANGENT =	7.6940			
LENGTH =	15.3787			
RADIUS =	180.0000			
EXTERNAL =	0.1644			
LONG CHORD =	15.3740			
MID. ORD. =	0.1642			
P.C. STATION	56+06.12 N	13,752,090.0368 E	3,225,253.4116	
P.T. STATION	56+21.50 N	13,752,097.4683 E	3,225,266.8701	
C.C.	N	13,752,251.1823 E	3,225,173.2110	
BACK = N	63° 32′ 27.33" E			
AHEAD = N	58° 38′ 44.66" E			
CHORD BEAR = N	61° 05′ 36.00" E			

COURSE FROM PT SUP_9636 TO PC SUP_9637 N 58° 38′ 44.66" E DIST 33.5433

CURVE DATA

CURVE SUP_9637				
P.I. STATION	56+81.69 N	13,752,128.7880 E	3,225,318.2722	
DELTA =	9° 49′ 45.61" (RT)			
DEGREE =	18° 29′ 15.61"			
TANGENT =	26.6489			
LENGTH =	53.1670			
RADIUS =	309.9135			
EXTERNAL =	1.1436			
LONG CHORD =	53.1018			
MID. ORD. =	1.1394			
P.C. STATION	56+55.05 N	13,752,114.9219 E	3,225,295.5150	
P.T. STATION	57+08.21 N	13,752,138.5657 E	3,225,343.0626	
C.C.	N	13,751,850.2661 E	3,225,456.7717	
BACK = N	58° 38′ 44.66" E			
AHEAD = N	68° 28′ 30.27" E			
CHORD BEAR = N	63° 33′ 37.47" E			

COURSE FROM PT SUP_9637 TO PC SUP_9638 N 66° 43′ 39.95" E DIST 74.3515

CURVE DATA

CURVE SUP_9638				
P.I. STATION	58+86.65 N	13,752,209.5412 E	3,225,506.7779	
DELTA =	3° 22′ 20.22" (LT)			
DEGREE =	1° 37′ 13.43"			
TANGENT =	104.0873			
LENGTH =	208.1145			
RADIUS =	3,535.9080			
EXTERNAL =	1.5317			
LONG CHORD =	208.0844			
MID. ORD. =	1.5310			
P.C. STATION	57+82.56 N	13,752,167.9420 E	3,225,411.3647	
P.T. STATION	59+90.68 N	13,752,256.6809 E	3,225,599.5788	
C.C.	N	13,755,409.1846 E	3,223,998.2152	
BACK = N	66° 26′ 35.80" E			
AHEAD = N	63° 04′ 15.58" E			
CHORD BEAR = N	64° 45′ 25.69" E			

COURSE FROM PT SUP_9638 TO PC SUP_9639 N 59° 08′ 34.84" E DIST 199.7835

CURVE DATA

CURVE SUP_9639				
P.I. STATION	62+16.03 N	13,752,372.3332 E	3,225,792.9861	
DELTA =	46° 09′ 21.32" (LT)			
DEGREE =	95° 29′ 34.68"			
TANGENT =	25.5649			
LENGTH =	48.3344			
RADIUS =	60.0000			
EXTERNAL =	5.2194			
LONG CHORD =	47.0380			
MID. ORD. =	4.8017			
P.C. STATION	61+90.46 N	13,752,359.1492 E	3,225,771.0830	
P.T. STATION	62+38.80 N	13,752,397.2629 E	3,225,798.6496	
C.C.	N	13,752,410.5551 E	3,225,740.1405	
BACK = N	58° 57′ 18.80" E			
AHEAD = N	12° 47′ 57.48" E			
CHORD BEAR = N	35° 52′ 38.14" E			

COURSE FROM PT SUP_9639 TO PC SUP_9640 N 12° 47′ 57.48" E DIST 44.5878

CURVE DATA

CURVE SUP_9640				
P.I. STATION	63+05.15 N	13,752,461.9689 E	3,225,813.3497	
DELTA =	47° 03′ 02.71" (RT)			
DEGREE =	114° 35′ 29.61"			
TANGENT =	21.7670			
LENGTH =	41.0595			
RADIUS =	50.0000			
EXTERNAL =	4.5326			
LONG CHORD =	39.9155			
MID. ORD. =	4.1558			
P.C. STATION	62+83.38 N	13,752,440.7428 E	3,225,808.5275	
P.T. STATION	63+24.44 N	13,752,472.9017 E	3,225,832.1718	
C.C.	N	13,752,429.6660 E	3,225,857.2851	
BACK = N	12° 47′ 57.48" E			
AHEAD = N	59° 51′ 00.19" E			
CHORD BEAR = N	36° 19′ 28.84" E			

COURSE FROM PT SUP_9640 TO PC SUP_9641 N 59° 51′ 00.19" E DIST 56.7657

NO.	DATE	REVISION	APPROVED

JOHANNA TORRES
130063
LICENSED PROFESSIONAL ENGINEER
STATE OF TEXAS
johannatorres
8/1/2023

Texas Department of Transportation
©2023

JONES|CARTER
Texas Board of Professional Engineers Registration No. F-23290
4350 Lockhill Selma Rd, Suite 100 • San Antonio, Texas 78249 • 210.494.5511

SH 96, FM 270
HORIZONTAL
ALIGNMENT DATA

SHEET 06 OF 18

DRAWN	FED.RD. DIV.NO.	FEDERAL AID PROJECT NO.		HIGHWAY NO.
AA	06			FM 270,ETC
DESIGNED	STATE	DIST.	COUNTY	SHEET NO.
JT	TEXAS	HOUSTON	GALVESTON	91
CHECKED	CONT.	SECT.	JOB	
NG	0912	73	215	
APPROVED				
DD				

PLOTDRIVER: LCBF.pltcfg PENTABLE: LCBF.tbl
DATE: 8/1/2023 11:52:41 AM USER: sss
FILE: c:\bms\pwe101-01\stela.staver-scull\dms22646\LCBF_HALN_06.dgn

SH 96 SIDE PATH HORIZONTAL ALIGNMENT DATA (CONT)

CURVE DATA

CURVE SUP_9641
P.I. STATION 64+03.97 N 13,752,512.8447 E 3,225,900.9390
DELTA = 48° 57′ 01.57" (RT)
DEGREE = 114° 35′ 29.61"
TANGENT = 22.7602
LENGTH = 42.7173
RADIUS = 50.0000
EXTERNAL = 4.9366
LONG CHORD = 41.4300
MID. ORD. = 4.4930
P.C. STATION 63+81.21 N 13,752,501.4131 E 3,225,881.2579
P.T. STATION 64+23.93 N 13,752,505.5097 E 3,225,922.4848
C.C. N 13,752,458.1774 E 3,225,906.3711
BACK = N 59° 51′ 00.19" E
AHEAD = S 71° 11′ 58.24" E
CHORD BEAR = N 84° 19′ 30.97" E

COURSE FROM PT SUP_9641 TO PC SUP_9642 S 71° 11′ 58.24" E DIST 83.6379

CURVE DATA

CURVE SUP_9642
P.I. STATION 65+38.22 N 13,752,468.6748 E 3,226,030.6838
DELTA = 91° 14′ 42.79" (LT)
DEGREE = 190° 59′ 09.35"
TANGENT = 30.6592
LENGTH = 47.7759
RADIUS = 30.0000
EXTERNAL = 12.8951
LONG CHORD = 42.8849
MID. ORD. = 9.0186
P.C. STATION 65+07.57 N 13,752,478.5554 E 3,226,001.6604
P.T. STATION 65+55.34 N 13,752,497.9060 E 3,226,039.9314
C.C. N 13,752,506.9548 E 3,226,011.3286
BACK = S 71° 11′ 58.24" E
AHEAD = N 17° 33′ 18.97" E
CHORD BEAR = N 63° 10′ 40.37" E

COURSE FROM PT SUP_9642 TO PC SUP_9643 N 17° 33′ 18.97" E DIST 61.6329

CURVE DATA

CURVE SUP_9643
P.I. STATION 66+26.69 N 13,752,565.9317 E 3,226,061.4520
DELTA = 35° 53′ 23.59" (RT)
DEGREE = 190° 59′ 09.35"
TANGENT = 9.7157
LENGTH = 18.7919
RADIUS = 30.0000
EXTERNAL = 1.5340
LONG CHORD = 18.4862
MID. ORD. = 1.4594
P.C. STATION 66+16.97 N 13,752,556.6685 E 3,226,058.5214
P.T. STATION 66+35.77 N 13,752,571.7183 E 3,226,069.2565
C.C. N 13,752,547.6197 E 3,226,087.1242
BACK = N 17° 33′ 18.97" E
AHEAD = N 53° 26′ 42.56" E
CHORD BEAR = N 35° 30′ 00.77" E

COURSE FROM PT SUP_9643 TO PC SUP_9644 N 53° 26′ 42.56" E DIST 63.4433

CURVE DATA

CURVE SUP_9644
P.I. STATION 68+34.34 N 13,752,691.1256 E 3,226,227.9094
DELTA = 3° 49′ 43.12" (LT)
DEGREE = 1° 25′ 02.00"
TANGENT = 135.1260
LENGTH = 270.1515
RADIUS = 4,042.8237
EXTERNAL = 2.2576
LONG CHORD = 270.1012
MID. ORD. = 2.2563
P.C. STATION 66+99.21 N 13,752,609.5047 E 3,226,120.2197
P.T. STATION 69+69.36 N 13,752,779.7551 E 3,226,329.9086
C.C. N 13,755,831.4628 E 3,223,678.2105
BACK = N 52° 50′ 25.90" E
AHEAD = N 49° 00′ 42.78" E
CHORD BEAR = N 50° 55′ 34.34" E

CURVE DATA

CURVE SUP_9645
P.I. STATION 69+84.53 N 13,752,789.7042 E 3,226,341.3586
DELTA = 0° 37′ 39.81" (LT)
DEGREE = 2° 04′ 09.07"
TANGENT = 15.1686
LENGTH = 30.3368
RADIUS = 2,769.0000
EXTERNAL = 0.0415
LONG CHORD = 30.3366
MID. ORD. = 0.0415
P.C. STATION 69+69.36 N 13,752,779.7551 E 3,226,329.9086
P.T. STATION 69+99.70 N 13,752,799.7781 E 3,226,352.6988
C.C. N 13,754,869.9226 E 3,224,513.7146
BACK = N 49° 00′ 42.78" E
AHEAD = N 48° 23′ 02.97" E
CHORD BEAR = N 48° 41′ 52.87" E

COURSE FROM PT SUP_9645 TO PC SUP_9646 N 48° 23′ 02.97" E DIST 25.9079

CURVE DATA

CURVE SUP_9646
P.I. STATION 70+27.63 N 13,752,818.3273 E 3,226,373.5796
DELTA = 2° 19′ 00.55" (LT)
DEGREE = 57° 17′ 44.81"
TANGENT = 2.0221
LENGTH = 4.0436
RADIUS = 100.0000
EXTERNAL = 0.0204
LONG CHORD = 4.0433
MID. ORD. = 0.0204
P.C. STATION 70+25.61 N 13,752,816.9844 E 3,226,372.0679
P.T. STATION 70+29.65 N 13,752,819.7303 E 3,226,375.0358
C.C. N 13,752,891.7458 E 3,226,305.6546
BACK = N 48° 23′ 02.97" E
AHEAD = N 46° 04′ 02.42" E
CHORD BEAR = N 47° 13′ 32.69" E

COURSE FROM PT SUP_9646 TO PC SUP_9647 N 46° 04′ 02.42" E DIST 41.3843

CURVE DATA

CURVE SUP_9647
P.I. STATION 70+72.27 N 13,752,849.2981 E 3,226,405.7263
DELTA = 1° 24′ 42.87" (RT)
DEGREE = 57° 17′ 44.79"
TANGENT = 1.2322
LENGTH = 2.4642
RADIUS = 100.0000
EXTERNAL = 0.0076
LONG CHORD = 2.4642
MID. ORD. = 0.0076
P.C. STATION 70+71.03 N 13,752,848.4432 E 3,226,404.8390
P.T. STATION 70+73.50 N 13,752,850.1309 E 3,226,406.6345
C.C. N 13,752,776.4276 E 3,226,474.2202
BACK = N 46° 04′ 02.42" E
AHEAD = N 47° 28′ 45.29" E
CHORD BEAR = N 46° 46′ 23.85" E

COURSE FROM PT SUP_9647 TO PC SUP_9648 N 48° 21′ 37.01" E DIST 259.6802

CURVE DATA

CURVE SUP_9648
P.I. STATION 73+53.82 N 13,753,036.3886 E 3,226,616.1289
DELTA = 28° 56′ 04.51" (LT)
DEGREE = 71° 37′ 11.01"
TANGENT = 20.6407
LENGTH = 40.4003
RADIUS = 80.0000
EXTERNAL = 2.6198
LONG CHORD = 39.9724
MID. ORD. = 2.5368
P.C. STATION 73+33.18 N 13,753,022.6740 E 3,226,600.7033
P.T. STATION 73+73.58 N 13,753,055.8542 E 3,226,622.9936
C.C. N 13,753,082.4610 E 3,226,547.5478
BACK = N 48° 21′ 37.01" E
AHEAD = N 19° 25′ 32.50" E
CHORD BEAR = N 33° 53′ 34.76" E

CURVE DATA

CURVE SUP_9649
P.I. STATION 73+92.89 N 13,753,074.0665 E 3,226,629.4164
DELTA = 27° 08′ 33.21" (RT)
DEGREE = 71° 37′ 11.01"
TANGENT = 19.3116
LENGTH = 37.8982
RADIUS = 80.0000
EXTERNAL = 2.2979
LONG CHORD = 37.5448
MID. ORD. = 2.2337
P.C. STATION 73+73.58 N 13,753,055.8542 E 3,226,622.9936
P.T. STATION 74+11.48 N 13,753,087.3430 E 3,226,643.4403
C.C. N 13,753,029.2475 E 3,226,698.4395
BACK = N 19° 25′ 32.50" E
AHEAD = N 46° 34′ 05.71" E
CHORD BEAR = N 32° 59′ 49.10" E

COURSE FROM PT SUP_9649 TO STAEQU1 N 46° 34′ 05.71" E DIST 88.0301

EQUATION: STA 74+99.51 (BK) = STA 75+00.00 (AH) END REGION 1 / BEGIN REGION 2

POINT STAEQU1 N 13,753,147.8629 E 3,226,707.3673 STA 75+00.00

COURSE FROM STAEQU1 TO PC SUP_9650 N 46° 34′ 05.71" E DIST 18.5152

CURVE DATA

CURVE SUP_9650
P.I. STATION 75+35.94 N 13,753,172.5690 E 3,226,733.4643
DELTA = 24° 34′ 15.52" (RT)
DEGREE = 71° 37′ 11.01"
TANGENT = 17.4216
LENGTH = 34.3076
RADIUS = 80.0000
EXTERNAL = 1.8750
LONG CHORD = 34.0453
MID. ORD. = 1.8320
P.C. STATION 75+18.52 N 13,753,160.5919 E 3,226,720.8129
P.T. STATION 75+52.82 N 13,753,178.2009 E 3,226,749.9505
C.C. N 13,753,102.4964 E 3,226,775.8121
BACK = N 46° 34′ 05.71" E
AHEAD = N 71° 08′ 21.22" E
CHORD BEAR = N 58° 51′ 13.46" E

COURSE FROM PT SUP_9650 TO PC SUP_9651 N 71° 08′ 21.22" E DIST 13.2241

NO.	DATE	REVISION	APPROVED

STATE OF TEXAS
JOHANNA TORRES
130063
LICENSED PROFESSIONAL ENGINEER
johannatorres
8/1/2023

Texas Department of Transportation
©2023

JONES|CARTER
Texas Board of Professional Engineers Registration No. F-23290
4350 Lockhill Selma Rd, Suite 100 • San Antonio, Texas 78249 • 210.494.5511

SH 96, FM 270 HORIZONTAL ALIGNMENT DATA

SHEET 07 OF 18

DRAWN	FED.RD. DIV.NO.	FEDERAL AID PROJECT NO.		HIGHWAY NO.
AA	06			FM 270, ETC
DESIGNED	STATE	DIST.	COUNTY	SHEET NO.
JT	TEXAS	HOUSTON	GALVESTON	92
CHECKED	CONT.	SECT.	JOB	
NG	0912	73	215	
APPROVED				
DD				

PLOTDRIVER: LCBF.plt cfg PENTABLE: LCBF.tbl
DATE: 8/1/2023 11:52:43 AM USER: sss
FILE: c:\bms\pwe101-01\stella.staver-scull\dms22646\LCBF_HALN_07.dgn

SH 96 SIDE PATH HORIZONTAL ALIGNMENT DATA (CONT)

CURVE DATA

CURVE SUP_9651

P.I. STATION	75+84.36	N 13,753,188.3955	E	3,226,779.7931
DELTA	25* 47′ 07.60" (LT)			
DEGREE	71* 37′ 11.01"			
TANGENT	18.3118			
LENGTH	36.0033			
RADIUS	80.0000			
EXTERNAL	2.0690			
LONG CHORD	35.7002			
MID. ORD.	2.0168			
P.C. STATION	75+66.05	N 13,753,182.4759	E	3,226,762.4646
P.T. STATION	76+02.05	N 13,753,201.2637	E	3,226,792.8212
C.C.		N 13,753,258.1804	E	3,226,736.6030

BACK = N 71* 08′ 21.22" E
AHEAD = N 45* 21′ 13.63" E
CHORD BEAR = N 58* 14′ 47.42" E

COURSE FROM PT SUP_9651 TO PC SUP_9652 N 45* 21′ 13.63" E DIST 196.4710

CURVE DATA

CURVE SUP_9652

P.I. STATION	78+33.10	N 13,753,363.6259	E	3,226,957.2010
DELTA	2* 24′ 03.09" (LT)			
DEGREE	3* 28′ 20.90"			
TANGENT	34.5749			
LENGTH	69.1398			
RADIUS	1,650.0000			
EXTERNAL	0.3622			
LONG CHORD	69.1347			
MID. ORD.	0.3621			
P.C. STATION	77+98.52	N 13,753,339.3291	E	3,226,932.6023
P.T. STATION	78+67.66	N 13,753,388.9318	E	3,226,980.7602
C.C.		N 13,754,513.2372	E	3,225,773.1025

BACK = N 45* 21′ 13.63" E
AHEAD = N 42* 57′ 10.53" E
CHORD BEAR = N 44* 09′ 12.08" E

COURSE FROM PT SUP_9652 TO PC SUP_9653 N 42* 57′ 10.53" E DIST 596.4997

CURVE DATA

CURVE SUP_9653

P.I. STATION	84+66.56	N 13,753,827.2744	E	3,227,388.8486
DELTA	3* 26′ 10.04" (RT)			
DEGREE	71* 37′ 11.01"			
TANGENT	2.3996			
LENGTH	4.7977			
RADIUS	80.0000			
EXTERNAL	0.0360			
LONG CHORD	4.7970			
MID. ORD.	0.0360			
P.C. STATION	84+64.16	N 13,753,825.5181	E	3,227,387.2135
P.T. STATION	84+68.96	N 13,753,828.9295	E	3,227,390.5860
C.C.		N 13,753,771.0063	E	3,227,445.7666

BACK = N 42* 57′ 10.53" E
AHEAD = N 46* 23′ 20.57" E
CHORD BEAR = N 44* 40′ 15.55" E

COURSE FROM PT SUP_9653 TO PC SUP_9654 N 46* 23′ 20.57" E DIST 60.6450

CURVE DATA

CURVE SUP_9654

P.I. STATION	85+32.18	N 13,753,872.5361	E	3,227,436.3599
DELTA	3* 41′ 14.22" (LT)			
DEGREE	71* 37′ 11.01"			
TANGENT	2.5751			
LENGTH	5.1484			
RADIUS	80.0000			
EXTERNAL	0.0414			
LONG CHORD	5.1475			
MID. ORD.	0.0414			
P.C. STATION	85+29.60	N 13,753,870.7599	E	3,227,434.4954
P.T. STATION	85+34.75	N 13,753,874.4285	E	3,227,438.1062
C.C.		N 13,753,928.6831	E	3,227,379.3147

BACK = N 46* 23′ 20.57" E
AHEAD = N 42* 42′ 06.35" E
CHORD BEAR = N 44* 32′ 43.46" E

COURSE FROM PT SUP_96_9654 TO PC SUP_9655 N 42* 42′ 06.35" E DIST 145.6353

CURVE DATA

CURVE SUP_9655

P.I. STATION	86+98.77	N 13,753,994.9661	E	3,227,549.3420
DELTA	25* 53′ 07.01" (LT)			
DEGREE	71* 37′ 11.01"			
TANGENT	18.3851			
LENGTH	36.1427			
RADIUS	80.0000			
EXTERNAL	2.0854			
LONG CHORD	35.8361			
MID. ORD.	2.0324			
P.C. STATION	86+80.39	N 13,753,981.4550	E	3,227,536.8735
P.T. STATION	87+16.53	N 13,754,012.5650	E	3,227,554.6609
C.C.		N 13,754,035.7096	E	3,227,478.0820

BACK = N 42* 42′ 06.35" E
AHEAD = N 16* 48′ 59.34" E
CHORD BEAR = N 29* 45′ 32.85" E

CURVE DATA

CURVE SUP_9656

P.I. STATION	87+34.91	N 13,754,030.1639	E	3,227,559.9799
DELTA	25° 53′ 07.01" (RT)			
DEGREE	71° 37′ 11.01"			
TANGENT	18.3851			
LENGTH	36.1427			
RADIUS	80.0000			
EXTERNAL	2.0854			
LONG CHORD	35.8361			
MID. ORD.	2.0324			
P.C. STATION	87+16.53	N 13,754,012.5650	E	3,227,554.6609
P.T. STATION	87+52.67	N 13,754,043.6750	E	3,227,572.4483
C.C.		N 13,753,989.4204	E	3,227,631.2398

BACK = N 16° 48′ 59.34" E
AHEAD = N 42° 42′ 06.35" E
CHORD BEAR = N 29° 45′ 32.85" E

COURSE FROM PT SUP_9656 TO PC SUP_9657 N 42° 42′ 06.35" E DIST 38.9498

CURVE DATA

CURVE SUP_9657

P.I. STATION	88+27.05	N 13,754,098.3323	E	3,227,622.8877
DELTA	47° 46′ 05.65" (LT)			
DEGREE	71° 37′ 11.01"			
TANGENT	35.4246			
LENGTH	66.6970			
RADIUS	80.0000			
EXTERNAL	7.4923			
LONG CHORD	64.7821			
MID. ORD.	6.8507			
P.C. STATION	87+91.62	N 13,754,072.2990	E	3,227,598.8634
P.T. STATION	88+58.32	N 13,754,133.6185	E	3,227,619.7593
C.C.		N 13,754,126.5536	E	3,227,540.0719

BACK = N 42° 42′ 06.35" E
AHEAD = N 5° 03′ 59.30" W
CHORD BEAR = N 18° 49′ 03.53" E

CURVE DATA

CURVE SUP_9658

P.I. STATION	88+72.78	N 13,754,148.0231	E	3,227,618.4823
DELTA	51° 28′ 17.87" (RT)			
DEGREE	190° 59′ 09.36"			
TANGENT	14.4611			
LENGTH	26.9505			
RADIUS	30.0000			
EXTERNAL	3.3035			
LONG CHORD	26.0533			
MID. ORD.	2.9758			
P.C. STATION	88+58.32	N 13,754,133.6185	E	3,227,619.7593
P.T. STATION	88+85.27	N 13,754,157.9948	E	3,227,628.9555
C.C.		N 13,754,136.2678	E	3,227,649.6421

BACK = N 5° 03′ 59.30" W
AHEAD = N 46° 24′ 18.57" E
CHORD BEAR = N 20° 40′ 09.64" E

COURSE FROM PT SUP_9658 TO PC SUP_9659 N 46° 24′ 18.58" E DIST 117.6954

CURVE DATA

CURVE SUP_9659

P.I. STATION	90+16.03	N 13,754,248.1596	E	3,227,723.6549
DELTA	47° 03′ 30.71" (RT)			
DEGREE	190° 59′ 09.35"			
TANGENT	13.0626			
LENGTH	24.6398			
RADIUS	30.0000			
EXTERNAL	2.7205			
LONG CHORD	23.9530			
MID. ORD.	2.4943			
P.C. STATION	90+02.97	N 13,754,239.1522	E	3,227,714.1945
P.T. STATION	90+27.60	N 13,754,247.3704	E	3,227,736.6936
C.C.		N 13,754,217.4252	E	3,227,734.8812

BACK = N 46° 24′ 18.57" E
AHEAD = S 86° 32′ 10.72" E
CHORD BEAR = N 69° 56′ 03.93" E

CURVE DATA

CURVE SUP_9660

P.I. STATION	90+62.37	N 13,754,245.2701	E	3,227,771.3937
DELTA	46° 58′ 27.23" (LT)			
DEGREE	71° 37′ 11.01"			
TANGENT	34.7636			
LENGTH	65.5884			
RADIUS	80.0000			
EXTERNAL	7.2268			
LONG CHORD	63.7669			
MID. ORD.	6.6280			
P.C. STATION	90+27.60	N 13,754,247.3704	E	3,227,736.6936
P.T. STATION	90+93.19	N 13,754,269.2045	E	3,227,796.6060
C.C.		N 13,754,327.2243	E	3,227,741.5269

BACK = S 86° 32′ 10.72" E
AHEAD = N 46° 29′ 22.06" E
CHORD BEAR = N 69° 58′ 35.67" E

COURSE FROM PT SUP_9660 TO PC SUP_9661 N 46° 29′ 22.06" E DIST 62.0790

NO.	DATE	REVISION	APPROVED

STATE OF TEXAS
JOHANNA TORRES
130063
LICENSED
PROFESSIONAL ENGINEER
8/1/2023

Texas Department of Transportation
©2023

JONES|CARTER
Texas Board of Professional Engineers Registration No. F-23290
4350 Lockhill Selma Rd, Suite 100• San Antonio, Texas 78249 •210.494.5511

SH 96, FM 270 HORIZONTAL ALIGNMENT DATA

SHEET 08 OF 18

DRAWN	FED.RD. DIV.NO.	FEDERAL AID PROJECT NO.		HIGHWAY NO.
AA	06			FM 270, ETC
DESIGNED	STATE	DIST.	COUNTY	SHEET NO.
JT	TEXAS	HOUSTON	GALVESTON	93
CHECKED	CONT.	SECT.	JOB	
NG	0912	73	215	
APPROVED				
DD				

PLOTDRIVER: LCBF.plt cfg PENTABLE: LCBF.tbl
DATE: 8/1/2023 11:52:44 AM USER: sss
FILE: c:\bms\pwe101-01\stela.staver-scull\dms22646\LCBF_HALN_08.dgn

SH 96 SIDE PATH HORIZONTAL ALIGNMENT DATA (CONT)

CURVE DATA

CURVE SUP_9661

P.I. STATION	91+75.63	N	13,754,325.9592	E	3,227,856.3910
DELTA =	28° 33′ 01.65" (RT)				
DEGREE =	71° 37′ 11.01"				
TANGENT =	20.3549				
LENGTH =	39.8640				
RADIUS =	80.0000				
EXTERNAL =	2.5489				
LONG CHORD =	39.4528				
MID. ORD. =	2.4702				
P.C. STATION	91+55.27	N	13,754,311.9451	E	3,227,841.6286
P.T. STATION	91+95.14	N	13,754,331.2138	E	3,227,876.0560
C.C.		N	13,754,253.9253	E	3,227,896.7076

BACK = N 46° 29′ 22.06" E
AHEAD = N 75° 02′ 23.71" E
CHORD BEAR = N 60° 45′ 52.88" E

CURVE DATA

CURVE SUP_9662

P.I. STATION	92+14.58	N	13,754,336.2327	E	3,227,894.8393
DELTA =	27° 19′ 10.04" (LT)				
DEGREE =	71° 37′ 11.01"				
TANGENT =	19.4423				
LENGTH =	38.1452				
RADIUS =	80.0000				
EXTERNAL =	2.3286				
LONG CHORD =	37.7848				
MID. ORD. =	2.2628				
P.C. STATION	91+95.14	N	13,754,331.2138	E	3,227,876.0560
P.T. STATION	92+33.28	N	13,754,349.3125	E	3,227,909.2241
C.C.		N	13,754,408.5022	E	3,227,855.4043

BACK = N 75° 02′ 23.71" E
AHEAD = N 47° 43′ 13.67" E
CHORD BEAR = N 61° 22′ 48.69" E

COURSE FROM PT SUP_9662 TO PC SUP_9663 N 47° 43′ 13.67" E DIST 147.8933

CURVE DATA

CURVE SUP_9663

P.I. STATION	93+85.05	N	13,754,451.4175	E	3,228,021.5166
DELTA =	5° 33′ 09.91" (RT)				
DEGREE =	71° 37′ 11.01"				
TANGENT =	3.8796				
LENGTH =	7.7531				
RADIUS =	80.0000				
EXTERNAL =	0.0940				
LONG CHORD =	7.7501				
MID. ORD. =	0.0939				
P.C. STATION	93+81.17	N	13,754,448.8075	E	3,228,018.6462
P.T. STATION	93+88.93	N	13,754,453.7375	E	3,228,024.6261
C.C.		N	13,754,389.6178	E	3,228,072.4661

BACK = N 47° 43′ 13.67" E
AHEAD = N 53° 16′ 23.59" E
CHORD BEAR = N 50° 29′ 48.63" E

COURSE FROM PT SUP_9663 TO PC SUP_9664 N 53° 16′ 23.58" E DIST 14.3528

CURVE DATA

CURVE SUP_9664

P.I. STATION	94+09.94	N	13,754,466.3005	E	3,228,041.4642
DELTA =	9° 30′ 41.68" (LT)				
DEGREE =	71° 37′ 11.01"				
TANGENT =	6.6556				
LENGTH =	13.2807				
RADIUS =	80.0000				
EXTERNAL =	0.2764				
LONG CHORD =	13.2654				
MID. ORD. =	0.2754				
P.C. STATION	94+03.28	N	13,754,462.3204	E	3,228,036.1297
P.T. STATION	94+16.56	N	13,754,471.1073	E	3,228,046.0676
C.C.		N	13,754,526.4401	E	3,227,988.2898

BACK = N 53° 16′ 23.59" E
AHEAD = N 43° 45′ 41.90" E
CHORD BEAR = N 48° 31′ 02.74" E

COURSE FROM PT SUP_9664 TO PC SUP_9665 N 43° 45′ 41.90" E DIST 27.2809

CURVE DATA

CURVE SUP_9665

P.I. STATION	94+46.53	N	13,754,492.7531	E	3,228,066.7973
DELTA =	3° 51′ 06.25" (RT)				
DEGREE =	71° 37′ 11.01"				
TANGENT =	2.6900				
LENGTH =	5.3780				
RADIUS =	80.0000				
EXTERNAL =	0.0452				
LONG CHORD =	5.3770				
MID. ORD. =	0.0452				
P.C. STATION	94+43.84	N	13,754,490.8103	E	3,228,064.9368
P.T. STATION	94+49.22	N	13,754,494.5665	E	3,228,068.7842
C.C.		N	13,754,435.4775	E	3,228,122.7146

BACK = N 43° 45′ 41.90" E
AHEAD = N 47° 36′ 48.15" E
CHORD BEAR = N 45° 41′ 15.03" E

COURSE FROM PT SUP_9665 TO PC SUP_9666 N 47° 36′ 48.15" E DIST 1,008.1671

CURVE DATA

CURVE SUP_96_9666

P.I. STATION	104+60.40	N	13,755,176.2315	E	3,228,815.6527
DELTA =	4° 18′ 35.41" (RT)				
DEGREE =	71° 37′ 11.01"				
TANGENT =	3.0103				
LENGTH =	6.0177				
RADIUS =	80.0000				
EXTERNAL =	0.0566				
LONG CHORD =	6.0162				
MID. ORD. =	0.0566				
P.C. STATION	104+57.39	N	13,755,174.2022	E	3,228,813.4293
P.T. STATION	104+63.40	N	13,755,178.0879	E	3,228,818.0223
C.C.		N	13,755,115.1132	E	3,228,867.3597

BACK = N 47° 36′ 48.15" E
AHEAD = N 51° 55′ 23.56" E
CHORD BEAR = N 49° 46′ 05.86" E

COURSE FROM PT SUP_9666 TO PC SUP_9667 N 51° 55′ 23.56" E DIST 20.5574

CURVE DATA

CURVE SUP_9667

P.I. STATION	104+87.02	N	13,755,192.6488	E	3,228,836.6079
DELTA =	4° 22′ 14.63" (LT)				
DEGREE =	71° 37′ 11.01"				
TANGENT =	3.0528				
LENGTH =	6.1027				
RADIUS =	80.0000				
EXTERNAL =	0.0582				
LONG CHORD =	6.1012				
MID. ORD. =	0.0582				
P.C. STATION	104+83.96	N	13,755,190.7660	E	3,228,834.2048
P.T. STATION	104+90.07	N	13,755,194.7092	E	3,228,838.8606
C.C.		N	13,755,253.7408	E	3,228,784.8674

BACK = N 51° 55′ 23.56" E
AHEAD = N 47° 33′ 08.93" E
CHORD BEAR = N 49° 44′ 16.25" E

COURSE FROM PT SUP_9667 TO PC SUP_9668 N 47° 33′ 08.93" E DIST 3.6026

CURVE DATA

CURVE SUP_9668

P.I. STATION	105+03.49	N	13,755,203.7721	E	3,228,848.7693
DELTA =	14° 00′ 15.29" (LT)				
DEGREE =	71° 37′ 11.01"				
TANGENT =	9.8258				
LENGTH =	19.5536				
RADIUS =	80.0000				
EXTERNAL =	0.6012				
LONG CHORD =	19.5050				
MID. ORD. =	0.5967				
P.C. STATION	104+93.67	N	13,755,197.1406	E	3,228,841.5189
P.T. STATION	105+13.22	N	13,755,211.9611	E	3,228,854.1994
C.C.		N	13,755,256.1722	E	3,228,787.5257

BACK = N 47° 33′ 08.93" E
AHEAD = N 33° 32′ 53.65" E
CHORD BEAR = N 40° 33′ 01.29" E

CURVE DATA

CURVE SUP_9669

P.I. STATION	105+33.18	N	13,755,228.5946	E	3,228,865.2290
DELTA =	28° 00′ 57.19" (RT)				
DEGREE =	71° 37′ 11.01"				
TANGENT =	19.9580				
LENGTH =	39.1176				
RADIUS =	80.0000				
EXTERNAL =	2.4519				
LONG CHORD =	38.7290				
MID. ORD. =	2.3790				
P.C. STATION	105+13.22	N	13,755,211.9611	E	3,228,854.1994
P.T. STATION	105+52.34	N	13,755,238.0981	E	3,228,882.7791
C.C.		N	13,755,167.7500	E	3,228,920.8731

BACK = N 33° 32′ 53.65" E
AHEAD = N 61° 33′ 50.84" E
CHORD BEAR = N 47° 33′ 22.24" E

CURVE DATA

CURVE SUP_9670

P.I. STATION	105+62.17	N	13,755,242.7794	E	3,228,891.4240
DELTA =	14° 00′ 41.90" (LT)				
DEGREE =	71° 37′ 10.99"				
TANGENT =	9.8310				
LENGTH =	19.5639				
RADIUS =	80.0000				
EXTERNAL =	0.6018				
LONG CHORD =	19.5152				
MID. ORD. =	0.5973				
P.C. STATION	105+52.34	N	13,755,238.0981	E	3,228,882.7791
P.T. STATION	105+71.90	N	13,755,249.4145	E	3,228,898.6782
C.C.		N	13,755,308.4461	E	3,228,844.6851

BACK = N 61° 33′ 50.84" E
AHEAD = N 47° 33′ 08.94" E
CHORD BEAR = N 54° 33′ 29.89" E

COURSE FROM PT SUP_9670 TO PC SUP_9671 N 47° 33′ 08.94" E DIST 202.3736

NO.	DATE	REVISION	APPROVED

STATE OF TEXAS
JOHANNA TORRES
130063
LICENSED
PROFESSIONAL ENGINEER
johannatorres
8/1/2023

Texas Department of Transportation
©2023

JONES|CARTER
Texas Board of Professional Engineers Registration No. F-23290
4350 Lockhill Selma Rd, Suite 100 • San Antonio, Texas 78249 • 210.494.5511

SH 96, FM 270
HORIZONTAL
ALIGNMENT DATA

SHEET 09 OF 18

DRAWN	FED. RD. DIV. NO.	FEDERAL AID PROJECT NO.		HIGHWAY NO.
AA	06			FM 270, ETC
DESIGNED	STATE	DIST.	COUNTY	SHEET NO.
JT	TEXAS	HOUSTON	GALVESTON	94
CHECKED	CONT.	SECT.	JOB	
NG	0912	73	215	
APPROVED				
DD				

PLOTDRIVER: LCBF.pltcfg PENTABLE: LCBF.tbl
DATE: 8/1/2023 11:52:46 AM USER: sss
FILE: c:\bms\pwe101-01\stela.staver-scull\dms22646\LCBF_HALN_09.dgn

SH 96 SIDE PATH HORIZONTAL ALIGNMENT DATA (CONT)

CURVE DATA

CURVE SUP_9671

P.I. STATION	107+85.48 N	13,755,393.5634 E	3,229,056.2788
DELTA =	15° 56′ 58.63" (RT)		
DEGREE =	71° 37′ 11.01"		
TANGENT =	11.2074		
LENGTH =	22.2699		
RADIUS =	80.0000		
EXTERNAL =	0.7812		
LONG CHORD =	22.1980		
MID. ORD. =	0.7737		
P.C. STATION	107+74.28 N	13,755,385.9993 E	3,229,048.0089
P.T. STATION	107+96.55 N	13,755,398.5637 E	3,229,066.3088
C.C.	N	13,755,326.9677 E	3,229,102.0020
BACK = N	47° 33′ 08.94" E		
AHEAD = N	63° 30′ 07.57" E		
CHORD BEAR = N	55° 31′ 38.25" E		

CURVE DATA

CURVE SUP_9672

P.I. STATION	108+14.84 N	13,755,406.7240 E	3,229,082.6774
DELTA =	40° 11′ 05.70" (LT)		
DEGREE =	114° 35′ 29.63"		
TANGENT =	18.2899		
LENGTH =	35.0680		
RADIUS =	50.0000		
EXTERNAL =	3.2402		
LONG CHORD =	34.3536		
MID. ORD. =	3.0430		
P.C. STATION	107+96.55 N	13,755,398.5637 E	3,229,066.3088
P.T. STATION	108+31.61 N	13,755,423.5202 E	3,229,089.9170
C.C.	N	13,755,443.3113 E	3,229,044.0006
BACK = N	63° 30′ 07.57" E		
AHEAD = N	23° 19′ 01.87" E		
CHORD BEAR = N	43° 24′ 34.72" E		

CURVE DATA

CURVE SUP_9673

P.I. STATION	108+38.42 N	13,755,429.7657 E	3,229,092.6089
DELTA =	9° 43′ 05.89" (LT)		
DEGREE =	71° 37′ 10.96"		
TANGENT =	6.8010		
LENGTH =	13.5693		
RADIUS =	80.0000		
EXTERNAL =	0.2886		
LONG CHORD =	13.5531		
MID. ORD. =	0.2875		
P.C. STATION	108+31.61 N	13,755,423.5202 E	3,229,089.9170
P.T. STATION	108+45.18 N	13,755,436.3760 E	3,229,094.2080
C.C.	N	13,755,455.1859 E	3,229,016.4507
BACK = N	23° 19′ 01.87" E		
AHEAD = N	13° 35′ 55.97" E		
CHORD BEAR = N	18° 27′ 28.92" E		

CURVE DATA

CURVE SUP_9674

P.I. STATION	108+69.67 N	13,755,460.1789 E	3,229,099.9660
DELTA =	34° 02′ 25.96" (RT)		
DEGREE =	71° 37′ 11.02"		
TANGENT =	24.4894		
LENGTH =	47.5296		
RADIUS =	80.0000		
EXTERNAL =	3.6644		
LONG CHORD =	46.8336		
MID. ORD. =	3.5039		
P.C. STATION	108+45.18 N	13,755,436.3760 E	3,229,094.2080
P.T. STATION	108+92.71 N	13,755,476.6797 E	3,229,118.0617
C.C.	N	13,755,417.5662 E	3,229,171.9653
BACK = N	13° 35′ 55.97" E		
AHEAD = N	47° 38′ 21.93" E		
CHORD BEAR = N	30° 37′ 08.95" E		

COURSE FROM PT SUP_9674 TO PC SUP_9675 N 47° 38′ 21.93" E DIST 146.7583

CURVE DATA

CURVE SUP_9675

P.I. STATION	110+48.64 N	13,755,581.7404 E	3,229,233.2769
DELTA =	13° 04′ 18.47" (LT)		
DEGREE =	71° 37′ 11.01"		
TANGENT =	9.1656		
LENGTH =	18.2517		
RADIUS =	80.0000		
EXTERNAL =	0.5233		
LONG CHORD =	18.2121		
MID. ORD. =	0.5199		
P.C. STATION	110+39.47 N	13,755,575.5646 E	3,229,226.5043
P.T. STATION	110+57.72 N	13,755,589.2879 E	3,229,238.4773
C.C.	N	13,755,634.6781 E	3,229,172.6007
BACK = N	47° 38′ 21.93" E		
AHEAD = N	34° 34′ 03.47" E		
CHORD BEAR = N	41° 06′ 12.70" E		

CURVE DATA

CURVE SUP_9676

P.I. STATION	110+66.86 N	13,755,596.8111 E	3,229,243.6610
DELTA =	13° 01′ 48.53" (RT)		
DEGREE =	71° 37′ 11.03"		
TANGENT =	9.1362		
LENGTH =	18.1935		
RADIUS =	80.0000		
EXTERNAL =	0.5200		
LONG CHORD =	18.1543		
MID. ORD. =	0.5166		
P.C. STATION	110+57.72 N	13,755,589.2879 E	3,229,238.4773
P.T. STATION	110+75.92 N	13,755,602.9719 E	3,229,250.4074
C.C.	N	13,755,543.8976 E	3,229,304.3539
BACK = N	34° 34′ 03.47" E		
AHEAD = N	47° 35′ 52.00" E		
CHORD BEAR = N	41° 04′ 57.73" E		

COURSE FROM PT SUP_9676 TO PC SUP_9677 N 47° 35′ 52.00" E DIST 103.1970

CURVE DATA

CURVE SUP_9677

P.I. STATION	111+86.38 N	13,755,677.4605 E	3,229,331.9765
DELTA =	10° 22′ 45.52" (LT)		
DEGREE =	71° 37′ 11.01"		
TANGENT =	7.2660		
LENGTH =	14.4923		
RADIUS =	80.0000		
EXTERNAL =	0.3293		
LONG CHORD =	14.4724		
MID. ORD. =	0.3279		
P.C. STATION	111+79.11 N	13,755,672.5608 E	3,229,326.6111
P.T. STATION	111+93.61 N	13,755,683.2467 E	3,229,336.3714
C.C.	N	13,755,731.6352 E	3,229,272.6646
BACK = N	47° 35′ 52.00" E		
AHEAD = N	37° 13′ 06.48" E		
CHORD BEAR = N	42° 24′ 29.24" E		

COURSE FROM PT SUP_9677 TO PC SUP_9678 N 37° 13′ 06.48" E DIST 35.4071

CURVE DATA

CURVE SUP_9678

P.I. STATION	112+41.71 N	13,755,721.5551 E	3,229,365.4685
DELTA =	45° 53′ 05.87" (RT)		
DEGREE =	190° 59′ 09.35"		
TANGENT =	12.6987		
LENGTH =	24.0253		
RADIUS =	30.0000		
EXTERNAL =	2.5769		
LONG CHORD =	23.3884		
MID. ORD. =	2.3731		
P.C. STATION	112+29.01 N	13,755,711.4426 E	3,229,357.7876
P.T. STATION	112+53.04 N	13,755,723.0799 E	3,229,378.0753
C.C.	N	13,755,693.2970 E	3,229,381.6776
BACK = N	37° 13′ 06.48" E		
AHEAD = N	83° 06′ 12.34" E		
CHORD BEAR = N	60° 09′ 39.41" E		

CURVE DATA

CURVE SUP_9679

P.I. STATION	112+62.61 N	13,755,724.2294 E	3,229,387.5787
DELTA =	35° 23′ 40.52" (LT)		
DEGREE =	190° 59′ 09.33"		
TANGENT =	9.5727		
LENGTH =	18.5326		
RADIUS =	30.0000		
EXTERNAL =	1.4902		
LONG CHORD =	18.2393		
MID. ORD. =	1.4197		
P.C. STATION	112+53.04 N	13,755,723.0799 E	3,229,378.0753
P.T. STATION	112+71.57 N	13,755,730.6708 E	3,229,394.6599
C.C.	N	13,755,752.8628 E	3,229,374.4730
BACK = N	83° 06′ 12.34" E		
AHEAD = N	47° 42′ 31.82" E		
CHORD BEAR = N	65° 24′ 22.08" E		

COURSE FROM PT SUP_9679 TO PC SUP_9680 N 47° 42′ 31.82" E DIST 45.1567

CURVE DATA

CURVE SUP_9680

P.I. STATION	113+37.32 N	13,755,774.9139 E	3,229,443.2975
DELTA =	28° 52′ 15.68" (LT)		
DEGREE =	71° 37′ 11.01"		
TANGENT =	20.5934		
LENGTH =	40.3116		
RADIUS =	80.0000		
EXTERNAL =	2.6080		
LONG CHORD =	39.8864		
MID. ORD. =	2.5257		
P.C. STATION	113+16.73 N	13,755,761.0566 E	3,229,428.0639
P.T. STATION	113+57.04 N	13,755,794.4042 E	3,229,449.9469
C.C.	N	13,755,820.2354 E	3,229,374.2320
BACK = N	47° 42′ 31.82" E		
AHEAD = N	18° 50′ 16.14" E		
CHORD BEAR = N	33° 16′ 23.98" E		

COURSE FROM PT SUP_9680 TO PC SUP_9681 N 18° 50′ 16.12" E DIST 1.8438

NO.	DATE	REVISION	APPROVED

STATE OF TEXAS
JOHANNA TORRES
130063
LICENSED PROFESSIONAL ENGINEER
johannatorres
8/1/2023

Texas Department of Transportation
©2023

JONES|CARTER
Texas Board of Professional Engineers Registration No. F-23290
4350 Lockhill Selma Rd, Suite 100• San Antonio, Texas 78249 •210.494.5511

SH 96, FM 270 HORIZONTAL ALIGNMENT DATA

SHEET 10 OF 18

DRAWN	FED.RD. DIV.NO.	FEDERAL AID PROJECT NO.		HIGHWAY NO.
AA	06			FM 270, ETC
DESIGNED	STATE	DIST.	COUNTY	SHEET NO.
JT	TEXAS	HOUSTON	GALVESTON	95
CHECKED	CONT.	SECT.	JOB	
NG	0912	73	215	
APPROVED				
DD				

DATE:8/1/2023 11:52:49 AM USER:sss
FILE:c:\dms\pwe101-01\stella.staver-scull\dms22646\LCBF_HALN_10.dgn
PLOTDRIVER: LCBF.pltcfg PENTABLE:LCBF.tbl

SH 96 SIDE PATH HORIZONTAL ALIGNMENT DATA (CONT)

CURVE DATA

CURVE SUP_9681				
P.I. STATION	113+59.59	N 13,755,796.8212	E	3,229,450.7716
DELTA =	1° 01′ 01.06" (RT)			
DEGREE =	71° 37′ 11.01"			
TANGENT =	0.7100			
LENGTH =	1.4199			
RADIUS =	80.0000			
EXTERNAL =	0.0032			
LONG CHORD =	1.4199			
MID. ORD. =	0.0032			
P.C. STATION	113+58.88	N 13,755,796.1493	E	3,229,450.5423
P.T. STATION	113+60.30	N 13,755,797.4890	E	3,229,451.0127
C.C.		N 13,755,770.3180	E	3,229,526.2572
BACK = N	18° 50′ 16.14" E			
AHEAD = N	19° 51′ 17.20" E			
CHORD BEAR = N	19° 20′ 46.67" E			

COURSE FROM PT SUP_9681 TO PC SUP_9682 N 13° 57′ 16.48" E DIST 15.4348

CURVE DATA

CURVE SUP_9682				
P.I. STATION	113+97.65	N 13,755,833.7306	E	3,229,460.0182
DELTA =	30° 37′ 52.00" (RT)			
DEGREE =	71° 37′ 11.01"			
TANGENT =	21.9089			
LENGTH =	42.7691			
RADIUS =	80.0000			
EXTERNAL =	2.9458			
LONG CHORD =	42.2616			
MID. ORD. =	2.8411			
P.C. STATION	113+75.74	N 13,755,812.4683	E	3,229,454.7348
P.T. STATION	114+18.51	N 13,755,849.3341	E	3,229,475.3977
C.C.		N 13,755,793.1761	E	3,229,532.3738
BACK = N	13° 57′ 16.48" E			
AHEAD = N	44° 35′ 08.48" E			
CHORD BEAR = N	29° 16′ 12.48" E			

COURSE FROM PT SUP_9682 TO PC SUP_9683 N 44° 35′ 08.48" E DIST 496.7003

CURVE DATA

CURVE SUP_9683				
P.I. STATION	119+25.74	N 13,756,210.5858	E	3,229,831.4623
DELTA =	15° 00′ 00.01" (RT)			
DEGREE =	71° 37′ 11.01"			
TANGENT =	10.5322			
LENGTH =	20.9440			
RADIUS =	80.0000			
EXTERNAL =	0.6903			
LONG CHORD =	20.8842			
MID. ORD. =	0.6844			
P.C. STATION	119+15.21	N 13,756,203.0847	E	3,229,824.0689
P.T. STATION	119+36.15	N 13,756,215.9177	E	3,229,840.5451
C.C.		N 13,756,146.9267	E	3,229,881.0451
BACK = N	44° 35′ 08.48" E			
AHEAD = N	59° 35′ 08.49" E			
CHORD BEAR = N	52° 05′ 08.48" E			

COURSE FROM PT SUP_9683 TO PC SUP_9684 N 59° 35′ 08.49" E DIST 7.6121

CURVE DATA

CURVE SUP_9684				
P.I. STATION	119+54.30	N 13,756,225.1032	E	3,229,856.1926
DELTA =	15° 00′ 00.01" (LT)			
DEGREE =	71° 37′ 11.01"			
TANGENT =	10.5322			
LENGTH =	20.9440			
RADIUS =	80.0000			
EXTERNAL =	0.6903			
LONG CHORD =	20.8842			
MID. ORD. =	0.6844			
P.C. STATION	119+43.76	N 13,756,219.7713	E	3,229,847.1097
P.T. STATION	119+64.71	N 13,756,232.6043	E	3,229,863.5859
C.C.		N 13,756,288.7623	E	3,229,806.6098
BACK = N	59° 35′ 08.49" E			
AHEAD = N	44° 35′ 08.48" E			
CHORD BEAR = N	52° 05′ 08.48" E			

COURSE FROM PT SUP_9684 TO PC SUP_9685 N 44° 35′ 08.48" E DIST 425.9689

CURVE DATA

CURVE SUP_9685				
P.I. STATION	124+17.56	N 13,756,555.1247	E	3,230,181.4754
DELTA =	37° 08′ 46.02" (LT)			
DEGREE =	71° 37′ 11.01"			
TANGENT =	26.8811			
LENGTH =	51.8658			
RADIUS =	80.0000			
EXTERNAL =	4.3955			
LONG CHORD =	50.9622			
MID. ORD. =	4.1665			
P.C. STATION	123+90.68	N 13,756,535.9799	E	3,230,162.6055
P.T. STATION	124+42.54	N 13,756,581.7795	E	3,230,184.9559
C.C.		N 13,756,592.1379	E	3,230,105.6294
BACK = N	44° 35′ 08.48" E			
AHEAD = N	7° 26′ 22.46" E			
CHORD BEAR = N	26° 00′ 45.47" E			

CURVE DATA

CURVE SUP_9686				
P.I. STATION	124+48.11	N 13,756,587.3010	E	3,230,185.6769
DELTA =	12° 42′ 27.99" (RT)			
DEGREE =	114° 34′ 38.37"			
TANGENT =	5.5683			
LENGTH =	11.0910			
RADIUS =	50.0062			
EXTERNAL =	0.3091			
LONG CHORD =	11.0683			
MID. ORD. =	0.3072			
P.C. STATION	124+42.54	N 13,756,581.7795	E	3,230,184.9559
P.T. STATION	124+53.63	N 13,756,592.5286	E	3,230,187.5949
C.C.		N 13,756,575.3047	E	3,230,234.5412
BACK = N	7° 26′ 22.46" E			
AHEAD = N	20° 08′ 50.45" E			
CHORD BEAR = N	13° 47′ 36.46" E			

CURVE DATA

CURVE SUP_9687				
P.I. STATION	124+55.91	N 13,756,594.6643	E	3,230,188.3784
DELTA =	25° 38′ 24.54" (RT)			
DEGREE =	573° 07′ 55.59"			
TANGENT =	2.2749			
LENGTH =	4.4737			
RADIUS =	9.9970			
EXTERNAL =	0.2556			
LONG CHORD =	4.4365			
MID. ORD. =	0.2492			
P.C. STATION	124+53.63	N 13,756,592.5286	E	3,230,187.5949
P.T. STATION	124+58.11	N 13,756,596.2507	E	3,230,190.0090
C.C.		N 13,756,589.0853	E	3,230,196.9801
BACK = N	20° 08′ 50.45" E			
AHEAD = N	45° 47′ 14.99" E			
CHORD BEAR = N	32° 58′ 02.72" E			

COURSE FROM PT SUP_9687 TO PC SUP_9688 N 45° 47′ 14.99" E DIST 96.4683

CURVE DATA

CURVE SUP_9688				
P.I. STATION	125+79.54	N 13,756,680.9317	E	3,230,277.0504
DELTA =	53° 04′ 25.07" (RT)			
DEGREE =	114° 35′ 29.61"			
TANGENT =	24.9692			
LENGTH =	46.3155			
RADIUS =	50.0000			
EXTERNAL =	5.8879			
LONG CHORD =	44.6773			
MID. ORD. =	5.2676			
P.C. STATION	125+54.57	N 13,756,663.5201	E	3,230,259.1535
P.T. STATION	126+00.89	N 13,756,677.0854	E	3,230,301.7216
C.C.		N 13,756,627.6822	E	3,230,294.0196
BACK = N	45° 47′ 14.99" E			
AHEAD = S	81° 08′ 19.93" E			
CHORD BEAR = N	72° 19′ 27.53" E			

COURSE FROM PT SUP_9688 TO PC SUP_9689 S 81° 08′ 19.93" E DIST 58.9068

CURVE DATA

CURVE SUP_9689				
P.I. STATION	126+98.14	N 13,756,662.1046	E	3,230,397.8139
DELTA =	51° 13′ 10.07" (LT)			
DEGREE =	71° 37′ 11.01"			
TANGENT =	38.3463			
LENGTH =	71.5159			
RADIUS =	80.0000			
EXTERNAL =	8.7155			
LONG CHORD =	69.1582			
MID. ORD. =	7.8593			
P.C. STATION	126+59.80	N 13,756,668.0114	E	3,230,359.9253
P.T. STATION	127+31.31	N 13,756,687.9409	E	3,230,426.1497
C.C.		N 13,756,747.0566	E	3,230,372.2485
BACK = S	81° 08′ 19.93" E			
AHEAD = N	47° 38′ 30.00" E			
CHORD BEAR = N	73° 15′ 05.03" E			

COURSE FROM PT SUP_9689 TO PC SUP_9690 N 47° 38′ 30.00" E DIST 619.5610

CURVE DATA

CURVE SUP_9690				
P.I. STATION	134+02.52	N 13,757,140.1754	E	3,230,922.1335
DELTA =	65° 41′ 17.81" (LT)			
DEGREE =	71° 37′ 11.01"			
TANGENT =	51.6438			
LENGTH =	91.7181			
RADIUS =	80.0000			
EXTERNAL =	15.2212			
LONG CHORD =	86.7769			
MID. ORD. =	12.7881			
P.C. STATION	133+50.87	N 13,757,105.3796	E	3,230,883.9715
P.T. STATION	134+42.59	N 13,757,189.2785	E	3,230,906.1347
C.C.		N 13,757,164.4952	E	3,230,830.0703
BACK = N	47° 38′ 30.00" E			
AHEAD = N	18° 02′ 47.81" W			
CHORD BEAR = N	14° 47′ 51.10" E			

COURSE FROM PT SUP_9690 TO PC SUP_9691 N 18° 02′ 47.81" W DIST 15.4280

NO.	DATE	REVISION	APPROVED

STATE OF TEXAS
JOHANNA TORRES
130063
LICENSED
PROFESSIONAL ENGINEER
johannatorres
8/1/2023

Texas Department of Transportation
©2023

JONES|CARTER
Texas Board of Professional Engineers Registration No. F-23290
4350 Lockhill Selma Rd, Suite 100 • San Antonio, Texas 78249 • 210.494.5511

SH 96, FM 270 HORIZONTAL ALIGNMENT DATA

DRAWN	FED.RD. DIV.NO.	FEDERAL AID PROJECT NO.		HIGHWAY NO.
AA	06			FM 270, ETC
DESIGNED	STATE	DIST.	COUNTY	SHEET NO.
JT	TEXAS	HOUSTON	GALVESTON	96
CHECKED	CONT.	SECT.	JOB	
NG	0912	73	215	
APPROVED				
DD				

PLOTDRIVER: LCBF.pltcfg PENTABLE: LCBF.tbl
DATE: 8/1/2023 11:52:53 AM USER: sss
FILE: c:\bms\pwe101-01\stella.stover-scull\dms22646\LCBF_HALN_11.dgn

SH 96 SIDE PATH HORIZONTAL ALIGNMENT DATA (CONT)

CURVE DATA

CURVE SUP_9691				
P.I. STATION	135+10.38	N 13,757,253.7275	E	3,230,885.1360
DELTA =	66° 24′ 18.34" (RT)			
DEGREE =	71° 37′ 11.01"			
TANGENT =	52.3556			
LENGTH =	92.7190			
RADIUS =	80.0000			
EXTERNAL =	15.6092			
LONG CHORD =	87.6161			
MID. ORD. =	13.0608			
P.C. STATION	134+58.02	N 13,757,203.9475	E	3,230,901.3552
P.T. STATION	135+50.74	N 13,757,288.5161	E	3,230,924.2622
C.C.		N 13,757,228.7308	E	3,230,977.4196
BACK = N	18° 02′ 47.81" W			
AHEAD = N	48° 21′ 30.53" E			
CHORD BEAR = N	15° 09′ 21.36" E			

COURSE FROM PT SUP_9691 TO PC SUP_9692 N 48° 21′ 30.53" E DIST 50.8429

CURVE DATA

CURVE SUP_9692				
P.I. STATION	137+00.12	N 13,757,386.4345	E	3,231,037.0721
DELTA =	2° 44′ 50.29" (RT)			
DEGREE =	1° 23′ 39.30"			
TANGENT =	98.5416			
LENGTH =	197.0453			
RADIUS =	4,109.4370			
EXTERNAL =	1.1813			
LONG CHORD =	197.0265			
MID. ORD. =	1.1810			
P.C. STATION	136+01.58	N 13,757,322.2996	E	3,230,962.2579
P.T. STATION	137+98.63	N 13,757,446.9097	E	3,231,114.8743
C.C.		N 13,754,202.3562	E	3,233,636.8468
BACK = N	49° 23′ 41.93" E			
AHEAD = N	52° 08′ 32.22" E			
CHORD BEAR = N	50° 46′ 07.08" E			

CURVE DATA

CURVE SUP_9693				
P.I. STATION	138+28.74	N 13,757,465.3880	E	3,231,138.6470
DELTA =	81° 24′ 32.71" (RT)			
DEGREE =	163° 42′ 08.02"			
TANGENT =	30.1096			
LENGTH =	49.7300			
RADIUS =	35.0000			
EXTERNAL =	11.1691			
LONG CHORD =	45.6511			
MID. ORD. =	8.4671			
P.C. STATION	137+98.63	N 13,757,446.9097	E	3,231,114.8743
P.T. STATION	138+48.36	N 13,757,444.6424	E	3,231,160.4691
C.C.		N 13,757,419.2759	E	3,231,136.3539
BACK = N	52° 08′ 32.22" E			
AHEAD = S	46° 26′ 55.07" E			
CHORD BEAR = S	87° 09′ 11.42" E			

COURSE FROM PT SUP_9693 TO PC SUP_9694 S 46° 26′ 55.07" E DIST 24.8234

CURVE DATA

CURVE SUP_9694				
P.I. STATION	139+30.72	N 13,757,387.8965	E	3,231,220.1594
DELTA =	75° 43′ 50.93" (LT)			
DEGREE =	77° 25′ 36.22"			
TANGENT =	57.5357			
LENGTH =	97.8097			
RADIUS =	74.0000			
EXTERNAL =	19.7356			
LONG CHORD =	90.8437			
MID. ORD. =	15.5803			
P.C. STATION	138+73.18	N 13,757,427.5389	E	3,231,178.4600
P.T. STATION	139+70.99	N 13,757,418.5385	E	3,231,268.8568
C.C.		N 13,757,481.1709	E	3,231,229.4464
BACK = S	46° 26′ 55.07" E			
AHEAD = N	57° 49′ 14.00" E			
CHORD BEAR = S	84° 18′ 50.54" E			

COURSE FROM PT SUP_9694 TO PC SUP_9695 N 57° 49′ 14.00" E DIST 425.3360

CURVE DATA

CURVE SUP_9695				
P.I. STATION	144+03.78	N 13,757,649.0309	E	3,231,635.1640
DELTA =	10° 38′ 50.33" (RT)			
DEGREE =	71° 37′ 11.01"			
TANGENT =	7.4547			
LENGTH =	14.8665			
RADIUS =	80.0000			
EXTERNAL =	0.3466			
LONG CHORD =	14.8451			
MID. ORD. =	0.3451			
P.C. STATION	143+96.33	N 13,757,645.0608	E	3,231,628.8544
P.T. STATION	144+11.19	N 13,757,651.7670	E	3,231,642.0984
C.C.		N 13,757,577.3500	E	3,231,671.4603
BACK = N	57° 49′ 14.00" E			
AHEAD = N	68° 28′ 04.33" E			
CHORD BEAR = N	63° 08′ 39.16" E			

CURVE DATA

CURVE SUP_9696				
P.I. STATION	144+18.65	N 13,757,654.5030	E	3,231,649.0329
DELTA =	10* 38′ 50.33" (LT)			
DEGREE =	71* 37′ 11.02"			
TANGENT =	7.4547			
LENGTH =	14.8665			
RADIUS =	80.0000			
EXTERNAL =	0.3466			
LONG CHORD =	14.8451			
MID. ORD. =	0.3451			
P.C. STATION	144+11.19	N 13,757,651.7670	E	3,231,642.0984
P.T. STATION	144+26.06	N 13,757,658.4732	E	3,231,655.3424
C.C.		N 13,757,726.1839	E	3,231,612.7366
BACK = N	68* 28′ 04.33" E			
AHEAD = N	57* 49′ 14.00" E			
CHORD BEAR = N	63* 08′ 39.16" E			

COURSE FROM PT SUP_9696 TO PC SUP_9697 N 57* 49′ 14.00" E DIST 223.1133

CURVE DATA

CURVE SUP_9697				
P.I. STATION	146+64.65	N 13,757,785.5380	E	3,231,857.2785
DELTA =	14* 41′ 41.93" (RT)			
DEGREE =	47* 44′ 47.34"			
TANGENT =	15.4735			
LENGTH =	30.7771			
RADIUS =	120.0000			
EXTERNAL =	0.9935			
LONG CHORD =	30.6928			
MID. ORD. =	0.9853			
P.C. STATION	146+49.17	N 13,757,777.2972	E	3,231,844.1820
P.T. STATION	146+79.95	N 13,757,790.1869	E	3,231,872.0370
C.C.		N 13,757,675.7311	E	3,231,908.0907
BACK = N	57* 49′ 14.00" E			
AHEAD = N	72* 30′ 55.93" E			
CHORD BEAR = N	65* 10′ 04.97" E			

COURSE FROM PT SUP_9697 TO PC SUP_9698 N 72* 30′ 55.94" E DIST 10.2481

CURVE DATA

CURVE SUP_9698				
P.I. STATION	146+98.29	N 13,757,795.6976	E	3,231,889.5313
DELTA =	33* 22′ 25.27" (LT)			
DEGREE =	212* 12′ 23.73"			
TANGENT =	8.0936			
LENGTH =	15.7270			
RADIUS =	27.0000			
EXTERNAL =	1.1870			
LONG CHORD =	15.5056			
MID. ORD. =	1.1370			
P.C. STATION	146+90.20	N 13,757,793.2659	E	3,231,881.8116
P.T. STATION	147+05.92	N 13,757,801.9749	E	3,231,894.6404
C.C.		N 13,757,819.0185	E	3,231,873.6996
BACK = N	72* 30′ 55.93" E			
AHEAD = N	39* 08′ 30.67" E			
CHORD BEAR = N	55* 49′ 43.30" E			

CURVE DATA

CURVE SUP_9699				
P.I. STATION	147+59.64	N 13,757,845.6631	E	3,231,925.8959
DELTA =	67* 45′ 36.80" (LT)			
DEGREE =	71* 37′ 11.01"			
TANGENT =	53.7175			
LENGTH =	94.6111			
RADIUS =	80.0000			
EXTERNAL =	16.3616			
LONG CHORD =	89.1931			
MID. ORD. =	13.5835			
P.C. STATION	147+05.92	N 13,757,801.9749	E	3,231,894.6404
P.T. STATION	148+00.54	N 13,757,891.1288	E	3,231,897.2874
C.C.		N 13,757,848.5230	E	3,231,829.5767
BACK = N	35* 34′ 50.81" E			
AHEAD = N	32* 10′ 46.00" W			
CHORD BEAR = N	1* 42′ 02.40" E			

COURSE FROM PT SUP_9699 TO PC SUP_96100 N 32* 10′ 45.99" W DIST 23.2426

CURVE DATA

CURVE SUP_96100				
P.I. STATION	148+27.78	N 13,757,914.1870	E	3,231,882.7784
DELTA =	22* 37′ 25.18" (LT)			
DEGREE =	286* 28′ 44.03"			
TANGENT =	4.0007			
LENGTH =	7.8971			
RADIUS =	20.0000			
EXTERNAL =	0.3962			
LONG CHORD =	7.8459			
MID. ORD. =	0.3885			
P.C. STATION	148+23.78	N 13,757,910.8009	E	3,231,884.9091
P.T. STATION	148+31.68	N 13,757,916.4930	E	3,231,879.5091
C.C.		N 13,757,900.1495	E	3,231,867.9814
BACK = N	32* 10′ 46.00" W			
AHEAD = N	54* 48′ 11.18" W			
CHORD BEAR = N	43* 29′ 28.59" W			

NO.	DATE	REVISION	APPROVED

STATE OF TEXAS
JOHANNA TORRES
130063
LICENSED
PROFESSIONAL ENGINEER
johannatorres
8/1/2023

Texas Department of Transportation
©2023

JONES|CARTER
Texas Board of Professional Engineers Registration No. F-23290
4350 Lockhill Selma Rd, Suite 100• San Antonio, Texas 78249•210.494.5511

SH 96, FM 270 HORIZONTAL ALIGNMENT DATA

SHEET 12 OF 18

DRAWN	FED.RD. DIV.NO.	FEDERAL AID PROJECT NO.		HIGHWAY NO.
AA	06			FM 270, ETC
DESIGNED	STATE	DIST.	COUNTY	SHEET NO.
JT	TEXAS	HOUSTON	GALVESTON	97
CHECKED	CONT.	SECT.	JOB	
NG	0912	73	215	
APPROVED				
DD				

PLOTDRIVER:LCBF.pltcfg PENTABLE:LCBF.tbl
DATE:8/1/2023 11:52:54 AM USER:sss
FILE:c:\bms\pwe101-01\stella.staver-scull\dms22646\LCBF_HALN_12.dgn

SH 96 SIDE PATH HORIZONTAL ALIGNMENT DATA (CONT)

CURVE DATA

CURVE SUP_96101

P.I. STATION	148+32.56	N	13,757,917.0032	E	3,231,878.7858
DELTA =	5° 04′ 05.04" (RT)				
DEGREE =	286° 28′ 43.58"				
TANGENT =	0.8851				
LENGTH =	1.7691				
RADIUS =	20.0000				
EXTERNAL =	0.0196				
LONG CHORD =	1.7685				
MID. ORD. =	0.0196				
P.C. STATION	148+31.68	N	13,757,916.4930	E	3,231,879.5091
P.T. STATION	148+33.44	N	13,757,917.5752	E	3,231,878.1104
C.C.		N	13,757,932.8365	E	3,231,891.0369
BACK = N	54° 48′ 11.18" W				
AHEAD = N	49° 44′ 06.14" W				
CHORD BEAR = N	52° 16′ 08.66" W				

CURVE DATA

CURVE SUP_96102

P.I. STATION	148+47.10	N	13,757,926.3989	E	3,231,867.6930
DELTA =	107° 33′ 20.14" (RT)				
DEGREE =	572° 57′ 28.07"				
TANGENT =	13.6522				
LENGTH =	18.7720				
RADIUS =	10.0000				
EXTERNAL =	6.9228				
LONG CHORD =	16.1346				
MID. ORD. =	4.0908				
P.C. STATION	148+33.44	N	13,757,917.5752	E	3,231,878.1104
P.T. STATION	148+52.22	N	13,757,933.6697	E	3,231,879.2479
C.C.		N	13,757,925.2059	E	3,231,884.5737
BACK = N	49° 44′ 06.14" W				
AHEAD = N	57° 49′ 14.00" E				
CHORD BEAR = N	4° 02′ 33.93" E				

COURSE FROM PT SUP_96102 TO PC SUP_96103 N 57° 49′ 14.00" E DIST 92.8424

CURVE DATA

CURVE SUP_96103

P.I. STATION	149+58.50	N	13,757,990.2732	E	3,231,969.2043
DELTA =	106° 42′ 02.84" (RT)				
DEGREE =	572° 57′ 28.06"				
TANGENT =	13.4407				
LENGTH =	18.6228				
RADIUS =	10.0000				
EXTERNAL =	6.7527				
LONG CHORD =	16.0460				
MID. ORD. =	4.0308				
P.C. STATION	149+45.06	N	13,757,983.1150	E	3,231,957.8283
P.T. STATION	149+63.68	N	13,757,977.3200	E	3,231,972.7913
C.C.		N	13,757,974.6512	E	3,231,963.1540
BACK = N	57° 49′ 14.00" E				
AHEAD = S	15° 28′ 43.16" E				
CHORD BEAR = S	68° 49′ 44.58" E				

CURVE DATA

CURVE SUP_96104

P.I. STATION	149+65.89	N	13,757,975.1876	E	3,231,973.3818
DELTA =	12° 37′ 33.70" (RT)				
DEGREE =	286° 28′ 44.15"				
TANGENT =	2.2126				
LENGTH =	4.4073				
RADIUS =	20.0000				
EXTERNAL =	0.1220				
LONG CHORD =	4.3984				
MID. ORD. =	0.1213				
P.C. STATION	149+63.68	N	13,757,977.3200	E	3,231,972.7913
P.T. STATION	149+68.09	N	13,757,972.9777	E	3,231,973.4919
C.C.		N	13,757,971.9824	E	3,231,953.5167
BACK = S	15° 28′ 43.16" E				
AHEAD = S	2° 51′ 09.46" E				
CHORD BEAR = S	9° 09′ 56.31" E				

COURSE FROM PT SUP_96104 TO PC SUP_96105 S 2° 51′ 09.46" E DIST 2.2591

CURVE DATA

CURVE SUP_96_105

P.I. STATION	149+75.16	N	13,757,965.9179	E	3,231,973.8437
DELTA =	27° 02′ 34.59" (LT)				
DEGREE =	286° 28′ 44.03"				
TANGENT =	4.8095				
LENGTH =	9.4398				
RADIUS =	20.0000				
EXTERNAL =	0.5702				
LONG CHORD =	9.3524				
MID. ORD. =	0.5544				
P.C. STATION	149+70.35	N	13,757,970.7214	E	3,231,973.6044
P.T. STATION	149+79.79	N	13,757,961.7484	E	3,231,976.2409
C.C.		N	13,757,971.7168	E	3,231,993.5796
BACK = S	2° 51′ 09.46" E				
AHEAD = S	29° 53′ 44.04" E				
CHORD BEAR = S	16° 22′ 26.75" E				

CURVE DATA

CURVE SUP_96106

P.I. STATION	149+81.87	N	13,757,959.9415	E	3,231,977.2797
DELTA =	2° 23′ 16.90" (LT)				
DEGREE =	57° 17′ 44.92"				
TANGENT =	2.0842				
LENGTH =	4.1679				
RADIUS =	99.9999				
EXTERNAL =	0.0217				
LONG CHORD =	4.1676				
MID. ORD. =	0.0217				
P.C. STATION	149+79.79	N	13,757,961.7484	E	3,231,976.2409
P.T. STATION	149+83.96	N	13,757,958.1794	E	3,231,978.3929
C.C.		N	13,758,011.5904	E	3,232,062.9343
BACK = S	29° 53′ 44.04" E				
AHEAD = S	32° 17′ 00.94" E				
CHORD BEAR = S	31° 05′ 22.49" E				

COURSE FROM PT SUP_96106 TO PC SUP_96107 S 32° 17′ 00.95" E DIST 18.3684

CURVE DATA

CURVE SUP_96107

P.I. STATION	150+63.45	N	13,757,890.9732	E	3,232,020.8520
DELTA =	91° 03′ 56.94" (LT)				
DEGREE =	95° 29′ 34.68"				
TANGENT =	61.1266				
LENGTH =	95.3639				
RADIUS =	60.0000				
EXTERNAL =	25.6532				
LONG CHORD =	85.6383				
MID. ORD. =	17.9700				
P.C. STATION	150+02.32	N	13,757,942.6505	E	3,231,988.2037
P.T. STATION	150+97.69	N	13,757,924.5771	E	3,232,071.9131
C.C.		N	13,757,974.6971	E	3,232,038.9285
BACK = S	32° 17′ 00.94" E				
AHEAD = N	56° 39′ 02.12" E				
CHORD BEAR = S	77° 48′ 59.41" E				

CURVE DATA

CURVE SUP_96108

P.I. STATION	152+26.47	N	13,757,995.3750	E	3,232,179.4903
DELTA =	4° 58′ 50.02" (LT)				
DEGREE =	1° 56′ 05.69"				
TANGENT =	128.7835				
LENGTH =	257.4048				
RADIUS =	2,961.1540				
EXTERNAL =	2.7991				
LONG CHORD =	257.3238				
MID. ORD. =	2.7965				
P.C. STATION	150+97.69	N	13,757,924.5771	E	3,232,071.9131
P.T. STATION	153+55.09	N	13,758,075.2452	E	3,232,280.5148
C.C.		N	13,760,398.1285	E	3,230,444.0383
BACK = N	56° 39′ 02.12" E				
AHEAD = N	51° 40′ 12.10" E				
CHORD BEAR = N	54° 09′ 37.11" E				

CURVE DATA

CURVE SUP_96109

P.I. STATION	153+60.63	N	13,758,078.6771	E	3,232,284.8557
DELTA =	7° 54′ 49.65" (LT)				
DEGREE =	71° 37′ 11.05"				
TANGENT =	5.5337				
LENGTH =	11.0497				
RADIUS =	80.0000				
EXTERNAL =	0.1912				
LONG CHORD =	11.0410				
MID. ORD. =	0.1907				
P.C. STATION	153+55.09	N	13,758,075.2452	E	3,232,280.5148
P.T. STATION	153+66.14	N	13,758,082.6740	E	3,232,288.6828
C.C.		N	13,758,138.0013	E	3,232,230.8997
BACK = N	51° 40′ 12.10" E				
AHEAD = N	43° 45′ 22.45" E				
CHORD BEAR = N	47° 42′ 47.27" E				

COURSE FROM PT SUP_96109 TO PC SUP_96110 N 43° 45′ 22.46" E DIST 4.4694

CURVE DATA

CURVE SUP_96110

P.I. STATION	153+75.65	N	13,758,089.5391	E	3,232,295.2561
DELTA =	7° 12′ 10.50" (RT)				
DEGREE =	71° 37′ 11.01"				
TANGENT =	5.0352				
LENGTH =	10.0572				
RADIUS =	80.0000				
EXTERNAL =	0.1583				
LONG CHORD =	10.0505				
MID. ORD. =	0.1580				
P.C. STATION	153+70.61	N	13,758,085.9022	E	3,232,291.7737
P.T. STATION	153+80.67	N	13,758,092.7106	E	3,232,299.1669
C.C.		N	13,758,030.5749	E	3,232,349.5568
BACK = N	43° 45′ 22.45" E				
AHEAD = N	50° 57′ 32.95" E				
CHORD BEAR = N	47° 21′ 27.70" E				

COURSE FROM PT SUP_96110 TO PC SUP_96111 N 50° 57′ 32.94" E DIST 19.8594

NO.	DATE	REVISION	APPROVED

STATE OF TEXAS
JOHANNA TORRES
130063
LICENSED
PROFESSIONAL ENGINEER
johannatorres
8/1/2023

Texas Department of Transportation
©2023

JONES|CARTER
Texas Board of Professional Engineers Registration No. F-23290
4350 Lockhill Selma Rd, Suite 100 • San Antonio, Texas 78249 • 210.494.5511

SH 96, FM 270
HORIZONTAL
ALIGNMENT DATA

SHEET 13 OF 18

DRAWN	FED.RD. DIV.NO.	FEDERAL AID PROJECT NO.		HIGHWAY NO.
AA	06			FM 270,ETC
DESIGNED	STATE	DIST.	COUNTY	SHEET NO.
JT	TEXAS	HOUSTON	GALVESTON	98
CHECKED	CONT.	SECT.	JOB	
NG	0912	73	215	
APPROVED				
DD				

PLOTDRIVER: LCBF.pltcfg PENTABLE: LCBF.tbl
DATE: 8/1/2023 11:52:56 AM USER: sss
FILE: c:\bms\pwe101-01\stella.staver-scull\dms22646\LCBF_HALN_13.dgn

SH 96 SIDE PATH HORIZONTAL ALIGNMENT DATA (CONT)

CURVE DATA

CURVE SUP_96111					
P.I. STATION	154+05.63	N	13,758,108.4353	E	3,232,318.5570
DELTA =	7° 18′ 10.66" (RT)				
DEGREE =	71° 37′ 11.01"				
TANGENT =	5.1053				
LENGTH =	10.1969				
RADIUS =	80.0000				
EXTERNAL =	0.1627				
LONG CHORD =	10.1900				
MID. ORD. =	0.1624				
P.C. STATION	154+00.53	N	13,758,105.2196	E	3,232,314.5917
P.T. STATION	154+10.73	N	13,758,111.1209	E	3,232,322.8989
C.C.		N	13,758,043.0838	E	3,232,364.9816
BACK = N	50° 57′ 32.95" E				
AHEAD = N	58° 15′ 43.61" E				
CHORD BEAR = N	54° 36′ 38.28" E				

COURSE FROM PT SUP_96111 TO PC SUP_96112 N 58° 15′ 43.62" E DIST 4.3635

CURVE DATA

CURVE SUP_96112					
P.I. STATION	154+20.66	N	13,758,116.3460	E	3,232,331.3465
DELTA =	7° 57′ 52.95" (LT)				
DEGREE =	71° 37′ 11.01"				
TANGENT =	5.5694				
LENGTH =	11.1208				
RADIUS =	80.0000				
EXTERNAL =	0.1936				
LONG CHORD =	11.1119				
MID. ORD. =	0.1932				
P.C. STATION	154+15.09	N	13,758,113.4163	E	3,232,326.6099
P.T. STATION	154+26.21	N	13,758,119.9037	E	3,232,335.6314
C.C.		N	13,758,181.4533	E	3,232,284.5272
BACK = N	58° 15′ 43.61" E				
AHEAD = N	50° 17′ 50.65" E				
CHORD BEAR = N	54° 16′ 47.13" E				

CURVE DATA

CURVE SUP_96113					
P.I. STATION	155+08.88	N	13,758,172.7145	E	3,232,399.2365
DELTA =	3° 11′ 54.30" (LT)				
DEGREE =	1° 56′ 05.69"				
TANGENT =	82.6716				
LENGTH =	165.3002				
RADIUS =	2,961.1540				
EXTERNAL =	1.1538				
LONG CHORD =	165.2788				
MID. ORD. =	1.1534				
P.C. STATION	154+26.21	N	13,758,119.9037	E	3,232,335.6314
P.T. STATION	155+91.51	N	13,758,228.9919	E	3,232,459.7960
C.C.		N	13,760,398.1285	E	3,230,444.0383
BACK = N	50° 17′ 50.65" E				
AHEAD = N	47° 05′ 56.35" E				
CHORD BEAR = N	48° 41′ 53.50" E				

CURVE DATA

CURVE SUP_96114					
P.I. STATION	156+24.27	N	13,758,251.2905	E	3,232,483.7913
DELTA =	44° 32′ 03.35" (LT)				
DEGREE =	71° 37′ 11.00"				
TANGENT =	32.7568				
LENGTH =	62.1816				
RADIUS =	80.0000				
EXTERNAL =	6.4466				
LONG CHORD =	60.6281				
MID. ORD. =	5.9658				
P.C. STATION	155+91.51	N	13,758,228.9919	E	3,232,459.7960
P.T. STATION	156+53.69	N	13,758,284.0145	E	3,232,485.2571
C.C.		N	13,758,287.5943	E	3,232,405.3373
BACK = N	47° 05′ 56.35" E				
AHEAD = N	2° 33′ 53.00" E				
CHORD BEAR = N	24° 49′ 54.68" E				

COURSE FROM PT SUP_96114 TO PC SUP_96115 N 2° 33′ 53.00" E DIST 33.2742

CURVE DATA

CURVE SUP_96115					
P.I. STATION	157+20.10	N	13,758,350.3592	E	3,232,488.2289
DELTA =	45° 00′ 00.00" (RT)				
DEGREE =	71° 37′ 11.01"				
TANGENT =	33.1371				
LENGTH =	62.8319				
RADIUS =	80.0000				
EXTERNAL =	6.5914				
LONG CHORD =	61.2293				
MID. ORD. =	6.0896				
P.C. STATION	156+86.97	N	13,758,317.2554	E	3,232,486.7461
P.T. STATION	157+49.80	N	13,758,372.7187	E	3,232,512.6854
C.C.		N	13,758,313.6755	E	3,232,566.6659
BACK = N	2° 33′ 53.00" E				
AHEAD = N	47° 33′ 53.00" E				
CHORD BEAR = N	25° 03′ 53.00" E				

COURSE FROM PT SUP_96115 TO PC SUP_96116 N 47° 33′ 53.00" E DIST 1,273.1749

CURVE DATA

CURVE SUP_96116					
P.I. STATION	170+31.30	N	13,759,237.4231	E	3,233,458.4874
DELTA =	11° 53′ 21.02" (LT)				
DEGREE =	71° 37′ 11.01"				
TANGENT =	8.3301				
LENGTH =	16.6004				
RADIUS =	80.0000				
EXTERNAL =	0.4325				
LONG CHORD =	16.5707				
MID. ORD. =	0.4302				
P.C. STATION	170+22.97	N	13,759,231.8023	E	3,233,452.3394
P.T. STATION	170+39.57	N	13,759,244.1899	E	3,233,463.3454
C.C.		N	13,759,290.8455	E	3,233,398.3588
BACK = N	47° 33′ 53.00" E				
AHEAD = N	35° 40′ 31.98" E				
CHORD BEAR = N	41° 37′ 12.49" E				

CURVE DATA

CURVE SUP_96117					
P.I. STATION	170+47.90	N	13,759,250.9568	E	3,233,468.2035
DELTA =	11° 53′ 21.02" (RT)				
DEGREE =	71° 37′ 10.97"				
TANGENT =	8.3301				
LENGTH =	16.6004				
RADIUS =	80.0000				
EXTERNAL =	0.4325				
LONG CHORD =	16.5707				
MID. ORD. =	0.4302				
P.C. STATION	170+39.57	N	13,759,244.1899	E	3,233,463.3454
P.T. STATION	170+56.17	N	13,759,256.5776	E	3,233,474.3515
C.C.		N	13,759,197.5344	E	3,233,528.3320
BACK = N	35° 40′ 31.98" E				
AHEAD = N	47° 33′ 53.00" E				
CHORD BEAR = N	41° 37′ 12.49" E				

COURSE FROM PT SUP_96117 TO PC SUP_96118 N 47° 33′ 53.00" E DIST 15.5892

CURVE DATA

CURVE SUP_96118					
P.I. STATION	170+91.36	N	13,759,280.3196	E	3,233,500.3202
DELTA =	27° 31′ 41.85" (LT)				
DEGREE =	71° 37′ 11.01"				
TANGENT =	19.5968				
LENGTH =	38.4367				
RADIUS =	80.0000				
EXTERNAL =	2.3653				
LONG CHORD =	38.0681				
MID. ORD. =	2.2973				
P.C. STATION	170+71.76	N	13,759,267.0965	E	3,233,485.8570
P.T. STATION	171+10.20	N	13,759,298.7303	E	3,233,507.0344
C.C.		N	13,759,326.1397	E	3,233,431.8764
BACK = N	47° 33′ 53.00" E				
AHEAD = N	20° 02′ 11.15" E				
CHORD BEAR = N	33° 48′ 02.07" E				

COURSE FROM PT SUP_96118 TO PC SUP_96119 N 20° 02′ 11.15" E DIST 16.1647

CURVE DATA

CURVE SUP_96119					
P.I. STATION	171+45.02	N	13,759,331.4406	E	3,233,518.9636
DELTA =	26° 14′ 57.78" (RT)				
DEGREE =	71° 37′ 11.01"				
TANGENT =	18.6529				
LENGTH =	36.6511				
RADIUS =	80.0000				
EXTERNAL =	2.1458				
LONG CHORD =	36.3314				
MID. ORD. =	2.0897				
P.C. STATION	171+26.36	N	13,759,313.9167	E	3,233,512.5727
P.T. STATION	171+63.02	N	13,759,344.3310	E	3,233,532.4458
C.C.		N	13,759,286.5073	E	3,233,587.7307
BACK = N	20° 02′ 11.15" E				
AHEAD = N	46° 17′ 08.93" E				
CHORD BEAR = N	33° 09′ 40.04" E				

COURSE FROM PT SUP_96119 TO PC SUP_96120 N 46° 17′ 08.93" E DIST 101.9954

CURVE DATA

CURVE SUP_96120					
P.I. STATION	172+81.46	N	13,759,426.1867	E	3,233,618.0606
DELTA =	23° 14′ 39.97" (RT)				
DEGREE =	71° 37′ 11.01"				
TANGENT =	16.4540				
LENGTH =	32.4554				
RADIUS =	80.0000				
EXTERNAL =	1.6746				
LONG CHORD =	32.2332				
MID. ORD. =	1.6402				
P.C. STATION	172+65.01	N	13,759,414.8160	E	3,233,606.1677
P.T. STATION	172+97.47	N	13,759,431.9409	E	3,233,633.4756
C.C.		N	13,759,356.9924	E	3,233,661.4526
BACK = N	46° 17′ 08.93" E				
AHEAD = N	69° 31′ 48.90" E				
CHORD BEAR = N	57° 54′ 28.92" E				

COURSE FROM PT SUP_96120 TO PC SUP_96121 N 71° 11′ 41.81" E DIST 40.3528

NO.	DATE	REVISION	APPROVED

JOHANNA TORRES
130063
LICENSED PROFESSIONAL ENGINEER
STATE OF TEXAS
johannatorres
8/1/2023

Texas Department of Transportation
©2023

JONES|CARTER
Texas Board of Professional Engineers Registration No. F-23290
4350 Lockhill Selma Rd, Suite 100 • San Antonio, Texas 78249 • 210.494.5511

SH 96, FM 270 HORIZONTAL ALIGNMENT DATA

SHEET 14 OF 18

DRAWN	FED. RD. DIV. NO.	FEDERAL AID PROJECT NO.		HIGHWAY NO.
AA	06			FM 270, ETC
DESIGNED	STATE	DIST.	COUNTY	SHEET NO.
JT	TEXAS	HOUSTON	GALVESTON	99
CHECKED	CONT.	SECT.	JOB	
NG	0912	73	215	
APPROVED				
DD				

PLOTDRIVER: LCBF.plt cfg PENTABLE: LCBF.tbl

DATE: 8/1/2023 11:52:58 AM USER: sss
FILE: c:\bms\pwe101-01\stela.staver-scull\dms22646\LCBF_HALN_14.dgn

SH 96 SIDE PATH HORIZONTAL ALIGNMENT DATA (CONT)

CURVE DATA

CURVE SUP_96121

P.I. STATION	173+53.10	N	13,759,449.8757	E	3,233,686.1434
DELTA =	21° 37′ 59.46" (LT)				
DEGREE =	71° 37′ 11.01"				
TANGENT =	15.2848				
LENGTH =	30.2056				
RADIUS =	80.0000				
EXTERNAL =	1.4471				
LONG CHORD =	30.0265				
MID. ORD. =	1.4214				
P.C. STATION	173+37.82	N	13,759,444.9486	E	3,233,671.6744
P.T. STATION	173+68.02	N	13,759,459.7898	E	3,233,697.7767
C.C.		N	13,759,520.6783	E	3,233,645.8865
BACK = N	71° 11′ 41.81" E				
AHEAD = N	49° 33′ 42.35" E				
CHORD BEAR = N	60° 22′ 42.08" E				

CURVE DATA

CURVE SUP_96122

P.I. STATION	173+74.00	N	13,759,463.6642	E	3,233,702.3229
DELTA =	8° 32′ 52.67" (RT)				
DEGREE =	71° 41′ 08.97"				
TANGENT =	5.9732				
LENGTH =	11.9242				
RADIUS =	79.9262				
EXTERNAL =	0.2229				
LONG CHORD =	11.9131				
MID. ORD. =	0.2223				
P.C. STATION	173+68.02	N	13,759,459.7898	E	3,233,697.7767
P.T. STATION	173+79.95	N	13,759,466.8198	E	3,233,707.3945
C.C.		N	13,759,398.9575	E	3,233,749.6191
BACK = N	49° 33′ 42.35" E				
AHEAD = N	58° 06′ 35.02" E				
CHORD BEAR = N	53° 50′ 08.68" E				

CURVE DATA

CURVE SUP_96123

P.I. STATION	173+87.34	N	13,759,470.7229	E	3,233,713.6676
DELTA =	10° 32′ 42.02" (LT)				
DEGREE =	71° 33′ 58.59"				
TANGENT =	7.3882				
LENGTH =	14.7346				
RADIUS =	80.0597				
EXTERNAL =	0.3402				
LONG CHORD =	14.7138				
MID. ORD. =	0.3387				
P.C. STATION	173+79.95	N	13,759,466.8198	E	3,233,707.3945
P.T. STATION	173+94.68	N	13,759,475.7082	E	3,233,719.1203
C.C.		N	13,759,534.7955	E	3,233,665.0994
BACK = N	58° 06′ 35.02" E				
AHEAD = N	47° 33′ 53.00" E				
CHORD BEAR = N	52° 50′ 14.01" E				

COURSE FROM PT SUP_96123 TO PC SUP_96124 N 47° 33′ 53.00" E DIST 2,297.5849

CURVE DATA

CURVE SUP_96124

P.I. STATION	197+25.41	N	13,761,048.3790	E	3,235,439.2865
DELTA =	45° 00′ 00.05" (LT)				
DEGREE =	71° 37′ 11.01"				
TANGENT =	33.1371				
LENGTH =	62.8319				
RADIUS =	80.0000				
EXTERNAL =	6.5914				
LONG CHORD =	61.2294				
MID. ORD. =	6.0896				
P.C. STATION	196+92.27	N	13,761,026.0195	E	3,235,414.8299
P.T. STATION	197+55.10	N	13,761,081.4829	E	3,235,440.7693
C.C.		N	13,761,085.0627	E	3,235,360.8494
BACK = N	47° 33′ 53.00" E				
AHEAD = N	2° 33′ 52.95" E				
CHORD BEAR = N	25° 03′ 52.98" E				

COURSE FROM PT SUP_96124 TO PC SUP_96125 N 2° 33′ 52.95" E DIST 1.2113

CURVE DATA

CURVE SUP_96125

P.I. STATION	197+60.31	N	13,761,086.6921	E	3,235,441.0026
DELTA =	43° 38′ 00.05" (RT)				
DEGREE =	572° 57′ 28.06"				
TANGENT =	4.0031				
LENGTH =	7.6155				
RADIUS =	10.0000				
EXTERNAL =	0.7715				
LONG CHORD =	7.4328				
MID. ORD. =	0.7162				
P.C. STATION	197+56.31	N	13,761,082.6930	E	3,235,440.8235
P.T. STATION	197+63.93	N	13,761,089.4629	E	3,235,443.8918
C.C.		N	13,761,082.2455	E	3,235,450.8134
BACK = N	2° 33′ 52.95" E				
AHEAD = N	46° 11′ 53.00" E				
CHORD BEAR = N	24° 22′ 52.98" E				

COURSE FROM PT SUP_96125 TO PC SUP_96126 N 46° 11′ 53.00" E DIST 105.1766

CURVE DATA

CURVE SUP_96126

P.I. STATION	198+74.76	N	13,761,166.1771	E	3,235,523.8832
DELTA =	31° 34′ 40.60" (RT)				
DEGREE =	286° 28′ 44.03"				
TANGENT =	5.6553				
LENGTH =	11.0228				
RADIUS =	20.0000				
EXTERNAL =	0.7842				
LONG CHORD =	10.8838				
MID. ORD. =	0.7546				
P.C. STATION	198+69.10	N	13,761,162.2627	E	3,235,519.8016
P.T. STATION	198+80.13	N	13,761,167.3746	E	3,235,529.4103
C.C.		N	13,761,147.8280	E	3,235,533.6449
BACK = N	46° 11′ 53.00" E				
AHEAD = N	77° 46′ 33.60" E				
CHORD BEAR = N	61° 59′ 13.30" E				

COURSE FROM PT SUP_96126 TO PC SUP_96127 N 77° 46′ 33.61" E DIST 36.8489

CURVE DATA

CURVE SUP_96127

P.I. STATION	199+37.41	N	13,761,179.5040	E	3,235,585.3976
DELTA =	28° 39′ 40.32" (LT)				
DEGREE =	71° 37′ 11.01"				
TANGENT =	20.4373				
LENGTH =	40.0186				
RADIUS =	80.0000				
EXTERNAL =	2.5693				
LONG CHORD =	39.6026				
MID. ORD. =	2.4893				
P.C. STATION	199+16.97	N	13,761,175.1767	E	3,235,565.4237
P.T. STATION	199+56.99	N	13,761,192.8811	E	3,235,600.8486
C.C.		N	13,761,253.3629	E	3,235,548.4850
BACK = N	77° 46′ 33.60" E				
AHEAD = N	49° 06′ 53.28" E				
CHORD BEAR = N	63° 26′ 43.44" E				

CURVE DATA

CURVE SUP_96128

P.I. STATION	206+22.88	N	13,761,628.7368	E	3,236,104.2770
DELTA =	11° 45′ 21.72" (RT)				
DEGREE =	0° 53′ 09.02"				
TANGENT =	665.8906				
LENGTH =	1,327.1057				
RADIUS =	6,467.9608				
EXTERNAL =	34.1871				
LONG CHORD =	1,324.7790				
MID. ORD. =	34.0073				
P.C. STATION	199+56.99	N	13,761,192.8811	E	3,235,600.8486
P.T. STATION	212+84.10	N	13,761,952.8791	E	3,236,685.9488
C.C.		N	13,756,302.9567	E	3,239,834.4235
BACK = N	49° 06′ 53.28" E				
AHEAD = N	60° 52′ 15.00" E				
CHORD BEAR = N	54° 59′ 34.14" E				

COURSE FROM PT SUP_96128 TO PC SUP_96129 N 60° 52′ 15.00" E DIST 386.2048

CURVE DATA

CURVE SUP_96129

P.I. STATION	216+87.61	N	13,762,149.3014	E	3,237,038.4275
DELTA =	59° 57′ 55.24" (LT)				
DEGREE =	190° 59′ 09.35"				
TANGENT =	17.3084				
LENGTH =	31.3978				
RADIUS =	30.0000				
EXTERNAL =	4.6350				
LONG CHORD =	29.9843				
MID. ORD. =	4.0147				
P.C. STATION	216+70.30	N	13,762,140.8760	E	3,237,023.3081
P.T. STATION	217+01.70	N	13,762,166.6076	E	3,237,038.7010
C.C.		N	13,762,167.0817	E	3,237,008.7047
BACK = N	60° 52′ 15.00" E				
AHEAD = N	0° 54′ 19.76" E				
CHORD BEAR = N	30° 53′ 17.38" E				

COURSE FROM PT SUP_96129 TO 71 N 0° 54′ 19.76" E DIST 23.2967

POINT 71 N 13,762,189.9014 E 3,237,039.0691 STA 217+25.00

==========

ENDING CHAIN SUP_96 DESCRIPTION

NO.	DATE	REVISION	APPROVED

STATE OF TEXAS
JOHANNA TORRES
130063
LICENSED
PROFESSIONAL ENGINEER
8/1/2023

Texas Department of Transportation
©2023

JONES|CARTER
Texas Board of Professional Engineers Registration No. F-23290
4350 Lockhill Selma Rd, Suite 100 • San Antonio, Texas 78249 • 210.494.5511

SH 96, FM 270 HORIZONTAL ALIGNMENT DATA

SHEET 15 OF 18

DRAWN	FED.RD. DIV.NO.	FEDERAL AID PROJECT NO.		HIGHWAY NO.
AA	06			FM 270, ETC
DESIGNED	STATE	DIST.	COUNTY	SHEET NO.
JT	TEXAS	HOUSTON	GALVESTON	
CHECKED	CONT.	SECT.	JOB	100
NG	0912	73	215	
APPROVED				
DD				

DATE:8/1/2023 11:53:00 AM USER:sss
FILE:c:\bms\pwe101-01\stela.staver-scull\dms22646\LCBF_HALN_15.dgn
PLOTDRIVER:LCBF.pltcfg PENTABLE:LCBF.tbl

FM 270 LEFT SIDE PATH HORIZONTAL ALIGNMENT DATA

Curve Data

Curve SUP_L_2701
P.I. Station 10+27.62 N 13,760,023.8860 E 3,216,391.5903
Delta = 38° 05′ 40.90" (LT)
Degree = 71° 37′ 11.01"
Tangent = 27.6202
Length = 53.1902
Radius = 80.0000
External = 4.6338
Long Chord = 52.2159
Mid. Ord. = 4.3801
P.C. Station 10+00.00 N 13,760,051.2364 E 3,216,387.7399
P.T. Station 10+53.19 N 13,760,004.7369 E 3,216,411.4948
C.C. N 13,760,062.3890 E 3,216,466.9587
Back = S 8° 00′ 48.69" E
Ahead = S 46° 06′ 29.58" E
Chord Bear = S 27° 03′ 39.13" E

Course from PT SUP_L_2701 to PC SUP_L_2702 S 46° 06′ 29.58" E Dist 111.4755

Curve Data

Curve SUP_L_2702
P.I. Station 11+69.44 N 13,759,924.1430 E 3,216,495.2683
Delta = 5° 27′ 49.20" (LT)
Degree = 57° 17′ 44.81"
Tangent = 4.7716
Length = 9.5359
Radius = 100.0000
External = 0.1138
Long Chord = 9.5323
Mid. Ord. = 0.1136
P.C. Station 11+64.67 N 13,759,927.4511 E 3,216,491.8297
P.T. Station 11+74.20 N 13,759,921.1773 E 3,216,499.0063
C.C. N 13,759,999.5162 E 3,216,561.1595
Back = S 46° 06′ 29.58" E
Ahead = S 51° 34′ 18.78" E
Chord Bear = S 48° 50′ 24.18" E

Course from PT SUP_L_2702 to PC SUP_L_2703 S 51° 34′ 18.78" E Dist 30.5543

Curve Data

Curve SUP_L_2703
P.I. Station 12+15.13 N 13,759,895.7362 E 3,216,531.0727
Delta = 11° 51′ 02.44" (RT)
Degree = 57° 17′ 44.81"
Tangent = 10.3787
Length = 20.6833
Radius = 100.0000
External = 0.5371
Long Chord = 20.6465
Mid. Ord. = 0.5343
P.C. Station 12+04.76 N 13,759,902.1869 E 3,216,522.9422
P.T. Station 12+25.44 N 13,759,887.7533 E 3,216,537.7052
C.C. N 13,759,823.8480 E 3,216,460.7889
Back = S 51° 34′ 18.78" E
Ahead = S 39° 43′ 16.34" E
Chord Bear = S 45° 38′ 47.56" E

Course from PT SUP_L_2703 to PC SUP_L_2704 S 39° 43′ 16.34" E Dist 154.2642

Curve Data

Curve SUP_L_2704
P.I. Station 13+82.68 N 13,759,766.8129 E 3,216,638.1875
Delta = 3° 24′ 17.36" (RT)
Degree = 57° 17′ 44.81"
Tangent = 2.9721
Length = 5.9425
Radius = 100.0000
External = 0.0442
Long Chord = 5.9417
Mid. Ord. = 0.0441
P.C. Station 13+79.70 N 13,759,769.0990 E 3,216,636.2882
P.T. Station 13+85.65 N 13,759,764.4181 E 3,216,639.9477
C.C. N 13,759,705.1937 E 3,216,559.3718
Back = S 39° 43′ 16.34" E
Ahead = S 36° 18′ 58.98" E
Chord Bear = S 38° 01′ 07.66" E

Course from PT SUP_L_2704 to PC SUP_L_2705 S 36° 18′ 58.99" E Dist 29.0329

Curve Data

Curve SUP_L_2705
P.I. Station 14+20.48 N 13,759,736.3509 E 3,216,660.5775
Delta = 6° 38′ 21.08" (LT)
Degree = 57° 17′ 44.81"
Tangent = 5.8003
Length = 11.5876
Radius = 100.0000
External = 0.1681
Long Chord = 11.5811
Mid. Ord. = 0.1678
P.C. Station 14+14.68 N 13,759,741.0246 E 3,216,657.1423
P.T. Station 14+26.27 N 13,759,732.1058 E 3,216,664.5299
C.C. N 13,759,800.2489 E 3,216,737.7182
Back = S 36° 18′ 58.98" E
Ahead = S 42° 57′ 20.07" E
Chord Bear = S 39° 38′ 09.53" E

Curve Data

Curve SUP_L_2706
P.I. Station 14+79.56 N 13,759,693.1015 E 3,216,700.8455
Delta = 1° 03′ 21.83" (RT)
Degree = 0° 59′ 27.00"
Tangent = 53.2931
Length = 106.5832
Radius = 5,782.5800
External = 0.2456
Long Chord = 106.5817
Mid. Ord. = 0.2456
P.C. Station 14+26.27 N 13,759,732.1058 E 3,216,664.5299
P.T. Station 15+32.85 N 13,759,653.4346 E 3,216,736.4361
C.C. N 13,755,791.6761 E 3,212,432.3620
Back = S 42° 57′ 20.07" E
Ahead = S 41° 53′ 58.24" E
Chord Bear = S 42° 25′ 39.15" E

Curve Data

Curve SUP_L_2707
P.I. Station 15+40.31 N 13,759,647.8817 E 3,216,741.4183
Delta = 8° 31′ 59.17" (LT)
Degree = 57° 17′ 44.81"
Tangent = 7.4603
Length = 14.8931
Radius = 100.0000
External = 0.2779
Long Chord = 14.8793
Mid. Ord. = 0.2771
P.C. Station 15+32.85 N 13,759,653.4346 E 3,216,736.4361
P.T. Station 15+47.74 N 13,759,643.1296 E 3,216,747.1693
C.C. N 13,759,720.2172 E 3,216,810.8678
Back = S 41° 53′ 58.24" E
Ahead = S 50° 25′ 57.41" E
Chord Bear = S 46° 09′ 57.82" E

Course from PT SUP_L_2707 to PC SUP_L_2708 S 50° 25′ 57.41" E Dist 21.1417

Curve Data

Curve SUP_L_2708
P.I. Station 15+76.78 N 13,759,624.6323 E 3,216,769.5546
Delta = 9° 01′ 50.69" (RT)
Degree = 57° 17′ 44.81"
Tangent = 7.8972
Length = 15.7616
Radius = 100.0000
External = 0.3113
Long Chord = 15.7453
Mid. Ord. = 0.3104
P.C. Station 15+68.88 N 13,759,629.6627 E 3,216,763.4669
P.T. Station 15+84.65 N 13,759,618.7087 E 3,216,774.7773
C.C. N 13,759,552.5751 E 3,216,699.7683
Back = S 50° 25′ 57.41" E
Ahead = S 41° 24′ 06.72" E
Chord Bear = S 45° 55′ 02.06" E

NO.	DATE	REVISION	APPROVED

STATE OF TEXAS
JOHANNA TORRES
130063
LICENSED
PROFESSIONAL ENGINEER
johannatorres
8/1/2023

Texas Department of Transportation
©2023

JONES|CARTER
Texas Board of Professional Engineers Registration No. F-23290
4350 Lockhill Selma Rd, Suite 100 • San Antonio, Texas 78249 • 210.494.5511

SH 96, FM 270 HORIZONTAL ALIGNMENT DATA

SHEET **16** OF **18**

DRAWN	FED. RD. DIV. NO.	FEDERAL AID PROJECT NO.		HIGHWAY NO.
AA	06			FM 270, ETC
DESIGNED	STATE	DIST.	COUNTY	SHEET NO.
JT	TEXAS	HOUSTON	GALVESTON	101
CHECKED	CONT.	SECT.	JOB	
NG	0912	73	215	
APPROVED				
DD				

PLOTDRIVER: LCBF.pltcfg PENTABLE: LCBF.tbl
DATE: 8/1/2023 11:53:02 AM USER: sss
FILE: c:\bms\pwe101-01\stela.staver-scull\dms22646\LCBF_HALN_16.dgn

FM 270 LEFT SIDE PATH HORIZONTAL ALIGNMENT DATA (CONT)

Curve Data

Curve SUP_L_2709
P.I. Station 20+64.37 N 13,759,258.8703 E 3,217,092.0383
Delta = 9° 29′ 11.46" (RT)
Degree = 0° 59′ 27.62"
Tangent = 479.7272
Length = 957.2616
Radius = 5,781.5800
External = 19.8686
Long Chord = 956.1686
Mid. Ord. = 19.8005
P.C. Station 15+84.65 N 13,759,618.7087 E 3,216,774.7773
P.T. Station 25+41.91 N 13,758,851.6634 E 3,217,345.6537
C.C. N 13,755,795.1400 E 3,212,438.0747
Back = S 41° 24′ 06.72" E
Ahead = S 31° 54′ 55.26" E
Chord Bear = S 36° 39′ 30.99" E

Curve Data

Curve SUP_L_27010
P.I. Station 25+43.03 N 13,758,850.7080 E 3,217,346.2487
Delta = 1° 17′ 23.26" (RT)
Degree = 57° 17′ 44.72"
Tangent = 1.1256
Length = 2.2511
Radius = 100.0000
External = 0.0063
Long Chord = 2.2511
Mid. Ord. = 0.0063
P.C. Station 25+41.91 N 13,758,851.6634 E 3,217,345.6537
P.T. Station 25+44.16 N 13,758,849.7394 E 3,217,346.8222
C.C. N 13,758,798.7968 E 3,217,260.7706
Back = S 31° 54′ 55.26" E
Ahead = S 30° 37′ 32.00" E
Chord Bear = S 31° 16′ 13.63" E

Course from PT SUP_L_27010 to PC SUP_L_27011 S 30° 37′ 32.00" E Dist 397.3081

Curve Data

Curve SUP_L_27011
P.I. Station 29+46.43 N 13,758,503.5754 E 3,217,551.7514
Delta = 5° 41′ 14.75" (RT)
Degree = 57° 17′ 44.81"
Tangent = 4.9673
Length = 9.9264
Radius = 100.0000
External = 0.1233
Long Chord = 9.9224
Mid. Ord. = 0.1231
P.C. Station 29+41.47 N 13,758,507.8498 E 3,217,549.2210
P.T. Station 29+51.39 N 13,758,499.0712 E 3,217,553.8458
C.C. N 13,758,456.9073 E 3,217,463.1695
Back = S 30° 37′ 32.00" E
Ahead = S 24° 56′ 17.25" E
Chord Bear = S 27° 46′ 54.63" E

Course from PT SUP_L_27011 to PC SUP_L_27012 S 24° 56′ 17.25" E Dist 293.3714

Curve Data

Curve SUP_L_27012
P.I. Station 32+55.69 N 13,758,223.1472 E 3,217,682.1487
Delta = 40° 00′ 58.93" (RT)
Degree = 190° 59′ 09.35"
Tangent = 10.9240
Length = 20.9525
Radius = 30.0000
External = 1.9270
Long Chord = 20.5293
Mid. Ord. = 1.8107
P.C. Station 32+44.76 N 13,758,233.0527 E 3,217,677.5427
P.T. Station 32+65.72 N 13,758,212.5993 E 3,217,679.3070
C.C. N 13,758,220.4035 E 3,217,650.3398
Back = S 24° 56′ 17.25" E
Ahead = S 15° 04′ 41.67" W
Chord Bear = S 4° 55′ 47.79" E

Curve Data

Curve SUP_L_27013
P.I. Station 32+76.43 N 13,758,202.2568 E 3,217,676.5206
Delta = 39° 17′ 51.71" (LT)
Degree = 190° 59′ 09.37"
Tangent = 10.7113
Length = 20.5762
Radius = 30.0000
External = 1.8549
Long Chord = 20.1753
Mid. Ord. = 1.7469
P.C. Station 32+65.72 N 13,758,212.5993 E 3,217,679.3070
P.T. Station 32+86.29 N 13,758,192.4882 E 3,217,680.9147
C.C. N 13,758,204.7952 E 3,217,708.2741
Back = S 15° 04′ 41.67" W
Ahead = S 24° 13′ 10.04" E
Chord Bear = S 4° 34′ 14.18" E

Course from PT SUP_L_27013 to SUPL271 S 24° 13′ 10.04" E Dist 66.6918

Point SUPL271 N 13,758,131.6666 E 3,217,708.2739 Sta 33+52.99

==========

Ending chain SUP_L_270 description

FM 270 RIGHT SIDE PATH HORIZONTAL ALIGNMENT DATA

Beginning chain SUP_R_270 description

==========

Point SUP270 N 13,759,858.2111 E 3,216,269.1018 Sta 10+00.00

Course from SUP270 to PC SUP_R_2701 N 48° 37′ 48.62" E Dist 23.8963

Curve Data

Curve SUP_R_2701
P.I. Station 10+76.77 N 13,759,908.9513 E 3,216,326.7165
Delta = 82° 46′ 39.39" (RT)
Degree = 95° 29′ 34.68"
Tangent = 52.8763
Length = 86.6845
Radius = 60.0000
External = 19.9744
Long Chord = 79.3398
Mid. Ord. = 14.9856
P.C. Station 10+23.90 N 13,759,874.0045 E 3,216,287.0350
P.T. Station 11+10.58 N 13,759,873.9782 E 3,216,366.3748
C.C. N 13,759,828.9770 E 3,216,326.6900
Back = N 48° 37′ 48.61" E
Ahead = S 48° 35′ 32.00" E
Chord Bear = S 89° 58′ 51.69" E

Course from PT SUP_R_2701 to PC SUP_R_2702 S 48° 35′ 32.00" E Dist 224.9579

Curve Data

Curve SUP_R_2702
P.I. Station 13+39.78 N 13,759,722.3834 E 3,216,538.2784
Delta = 4° 51′ 22.11" (RT)
Degree = 57° 17′ 44.81"
Tangent = 4.2403
Length = 8.4756
Radius = 100.0000
External = 0.0899
Long Chord = 8.4730
Mid. Ord. = 0.0898
P.C. Station 13+35.54 N 13,759,725.1880 E 3,216,535.0980
P.T. Station 13+44.01 N 13,759,719.3196 E 3,216,541.2099
C.C. N 13,759,650.1858 E 3,216,468.9567
Back = S 48° 35′ 32.00" E
Ahead = S 43° 44′ 09.89" E
Chord Bear = S 46° 09′ 50.95" E

Curve Data

Curve SUP_R_2703
P.I. Station 18+63.75 N 13,759,343.7910 E 3,216,900.5255
Delta = 10° 27′ 39.03" (RT)
Degree = 1° 00′ 32.97"
Tangent = 519.7398
Length = 1,036.5906
Radius = 5,677.5800
External = 23.7395
Long Chord = 1,035.1514
Mid. Ord. = 23.6407
P.C. Station 13+44.01 N 13,759,719.3196 E 3,216,541.2099
P.T. Station 23+80.60 N 13,758,909.2653 E 3,217,185.6868
C.C. N 13,755,794.1954 E 3,212,438.9770
Back = S 43° 44′ 09.89" E
Ahead = S 33° 16′ 30.86" E
Chord Bear = S 38° 30′ 20.38" E

Curve Data

Curve SUP_R_2704
P.I. Station 23+86.91 N 13,758,903.9930 E 3,217,189.1468
Delta = 9° 00′ 13.36" (LT)
Degree = 71° 32′ 06.03"
Tangent = 6.3062
Length = 12.5864
Radius = 80.0947
External = 0.2479
Long Chord = 12.5735
Mid. Ord. = 0.2471
P.C. Station 23+80.60 N 13,758,909.2653 E 3,217,185.6868
P.T. Station 23+93.19 N 13,758,899.3272 E 3,217,193.3892
C.C. N 13,758,953.2102 E 3,217,252.6496
Back = S 33° 16′ 30.86" E
Ahead = S 42° 16′ 44.22" E
Chord Bear = S 37° 46′ 37.54" E

Curve Data

Curve SUP_R_2705
P.I. Station 23+99.79 N 13,758,894.4458 E 3,217,197.8277
Delta = 9° 26′ 22.51" (RT)
Degree = 71° 42′ 02.52"
Tangent = 6.5976
Length = 13.1653
Radius = 79.9097
External = 0.2719
Long Chord = 13.1504
Mid. Ord. = 0.2710
P.C. Station 23+93.19 N 13,758,899.3272 E 3,217,193.3892
P.T. Station 24+06.36 N 13,758,888.9026 E 3,217,201.4054
C.C. N 13,758,845.5687 E 3,217,134.2658
Back = S 42° 16′ 44.22" E
Ahead = S 32° 50′ 21.72" E
Chord Bear = S 37° 33′ 32.97" E

Course from PT SUP_R_2705 to PC SUP_R_2706 S 32° 50′ 21.72" E Dist 30.0075

NO.	DATE	REVISION	APPROVED

STATE OF TEXAS
JOHANNA TORRES
130063
LICENSED
PROFESSIONAL ENGINEER
johannatorres
8/1/2023

Texas Department of Transportation
©2023

JONES|CARTER
Texas Board of Professional Engineers Registration No. F-23290
4350 Lockhill Selma Rd, Suite 100 • San Antonio, Texas 78249 • 210.494.5511

SH 96, FM 270
HORIZONTAL
ALIGNMENT DATA

SHEET 17 OF 18

DRAWN	FED. RD. DIV. NO.	FEDERAL AID PROJECT NO.		HIGHWAY NO.
AA	06			FM 270, ETC
DESIGNED	STATE	DIST.	COUNTY	SHEET NO.
JT	TEXAS	HOUSTON	GALVESTON	102
CHECKED	CONT.	SECT.	JOB	
NG	0912	73	215	
APPROVED				
DD				

PLOTDRIVER: LCBF.pltcfg
PENTABLE: LCBF.tbl
DATE: 8/1/2023 11:53:03 AM USER: sss
FILE: c:\bms\pwe101-01\stela.staver-scull\dms22646\LCBF_HALN_17.dgn

FM 270 RIGHT SIDE PATH B HORIZONTAL ALIGNMENT DATA (CONT)

Curve Data

Curve SUP_R_2706
P.I. Station 24+42.91 N 13,758,858.1903 E 3,217,221.2280
Delta = 9° 21′ 21.77" (RT)
Degree = 71° 37′ 11.01"
Tangent = 6.5463
Length = 13.0635
Radius = 80.0000
External = 0.2674
Long Chord = 13.0490
Mid. Ord. = 0.2665
P.C. Station 24+36.36 N 13,758,863.6905 E 3,217,217.6781
P.T. Station 24+49.43 N 13,758,852.1862 E 3,217,223.8366
C.C. N 13,758,820.3076 E 3,217,150.4625
Back = S 32° 50′ 21.72" E
Ahead = S 23° 28′ 59.95" E
Chord Bear = S 28° 09′ 40.83" E

Curve Data

Curve SUP_R_2707
P.I. Station 24+55.70 N 13,758,846.4287 E 3,217,226.3380
Delta = 8° 58′ 23.94" (LT)
Degree = 71° 37′ 10.94"
Tangent = 6.2774
Length = 12.5291
Radius = 80.0000
External = 0.2459
Long Chord = 12.5163
Mid. Ord. = 0.2452
P.C. Station 24+49.43 N 13,758,852.1862 E 3,217,223.8366
P.T. Station 24+61.96 N 13,758,841.1319 E 3,217,229.7069
C.C. N 13,758,884.0648 E 3,217,297.2107
Back = S 23° 28′ 59.95" E
Ahead = S 32° 27′ 23.89" E
Chord Bear = S 27° 58′ 11.92" E

Curve Data

Curve SUP_R_2708
P.I. Station 25+52.02 N 13,758,765.1399 E 3,217,278.0383
Delta = 1° 49′ 03.12" (RT)
Degree = 1° 00′ 32.97"
Tangent = 90.0595
Length = 180.1038
Radius = 5,677.5797
External = 0.7142
Long Chord = 180.0962
Mid. Ord. = 0.7141
P.C. Station 24+61.96 N 13,758,841.1319 E 3,217,229.7069
P.T. Station 26+42.06 N 13,758,687.6532 E 3,217,323.9352
C.C. N 13,755,794.1955 E 3,212,438.9772
Back = S 32° 27′ 23.89" E
Ahead = S 30° 38′ 20.77" E
Chord Bear = S 31° 32′ 52.33" E

Course from PT SUP_R_2708 to SUP271 S 30° 38′ 21.25" E Dist 0.0824

Point SUP271 N 13,758,687.5823 E 3,217,323.9772 Sta 26+42.14

Course from SUP271 to PC SUP_R_2709 S 30° 10′ 22.08" E Dist 284.9919

Curve Data

Curve SUP_R_2709
P.I. Station 29+40.74 N 13,758,429.4375 E 3,217,474.0570
Delta = 19° 18′ 32.91" (LT)
Degree = 71° 37′ 11.01"
Tangent = 13.6094
Length = 26.9606
Radius = 80.0000
External = 1.1493
Long Chord = 26.8332
Mid. Ord. = 1.1331
P.C. Station 29+27.13 N 13,758,441.2030 E 3,217,467.2168
P.T. Station 29+54.10 N 13,758,420.5957 E 3,217,484.4029
C.C. N 13,758,481.4118 E 3,217,536.3779
Back = S 30° 10′ 22.08" E
Ahead = S 49° 28′ 54.99" E
Chord Bear = S 39° 49′ 38.53" E

Curve Data

Curve SUP_R_27010
P.I. Station 29+67.70 N 13,758,411.7544 E 3,217,494.7481
Delta = 19° 18′ 32.91" (RT)
Degree = 71° 37′ 27.46"
Tangent = 13.6085
Length = 26.9589
Radius = 79.9949
External = 1.1493
Long Chord = 26.8315
Mid. Ord. = 1.1330
P.C. Station 29+54.10 N 13,758,420.5957 E 3,217,484.4029
P.T. Station 29+81.05 N 13,758,399.9896 E 3,217,501.5879
C.C. N 13,758,359.7834 E 3,217,432.4312
Back = S 49° 28′ 54.99" E
Ahead = S 30° 10′ 22.08" E
Chord Bear = S 39° 49′ 38.53" E

Course from PT SUP_R_27010 to PC SUP_R_27011 S 30° 10′ 22.08" E Dist 30.0009

Curve Data

Curve SUP_R_27011
P.I. Station 30+24.66 N 13,758,362.2883 E 3,217,523.5066
Delta = 19° 18′ 31.06" (RT)
Degree = 71° 37′ 11.01"
Tangent = 13.6090
Length = 26.9599
Radius = 80.0000
External = 1.1493
Long Chord = 26.8325
Mid. Ord. = 1.1330
P.C. Station 30+11.06 N 13,758,374.0535 E 3,217,516.6666
P.T. Station 30+38.02 N 13,758,348.9232 E 3,217,526.0716
C.C. N 13,758,333.8447 E 3,217,447.5055
Back = S 30° 10′ 22.08" E
Ahead = S 10° 51′ 51.02" E
Chord Bear = S 20° 31′ 06.55" E

Curve Data

Curve SUP_R_27012
P.I. Station 30+51.62 N 13,758,335.5576 E 3,217,528.6368
Delta = 19° 18′ 31.06" (LT)
Degree = 71° 37′ 00.28"
Tangent = 13.6096
Length = 26.9611
Radius = 80.0033
External = 1.1493
Long Chord = 26.8337
Mid. Ord. = 1.1330
P.C. Station 30+38.02 N 13,758,348.9232 E 3,217,526.0716
P.T. Station 30+64.98 N 13,758,323.7919 E 3,217,535.4771
C.C. N 13,758,364.0024 E 3,217,604.6411
Back = S 10° 51′ 51.02" E
Ahead = S 30° 10′ 22.08" E
Chord Bear = S 20° 31′ 06.55" E

Course from PT SUP_R_27012 to PC SUP_R_27013 S 30° 10′ 22.08" E Dist 142.7449

Curve Data

Curve SUP_R_27013
P.I. Station 32+17.94 N 13,758,191.5536 E 3,217,612.3576
Delta = 37° 37′ 00.72" (LT)
Degree = 190° 59′ 09.35"
Tangent = 10.2178
Length = 19.6961
Radius = 30.0000
External = 1.6923
Long Chord = 19.3443
Mid. Ord. = 1.6019
P.C. Station 32+07.72 N 13,758,200.3870 E 3,217,607.2221
P.T. Station 32+27.42 N 13,758,187.6912 E 3,217,621.8172
C.C. N 13,758,215.4653 E 3,217,633.1575
Back = S 30° 10′ 22.08" E
Ahead = S 67° 47′ 22.80" E
Chord Bear = S 48° 58′ 52.44" E

Curve Data

Curve SUP_R_27014
P.I. Station 32+39.23 N 13,758,183.2272 E 3,217,632.7503
Delta = 42° 58′ 24.20" (RT)
Degree = 190° 59′ 09.34"
Tangent = 11.8093
Length = 22.5008
Radius = 30.0000
External = 2.2406
Long Chord = 21.9771
Mid. Ord. = 2.0849
P.C. Station 32+27.42 N 13,758,187.6912 E 3,217,621.8172
P.T. Station 32+49.92 N 13,758,172.5085 E 3,217,637.7067
C.C. N 13,758,159.9172 E 3,217,610.4770
Back = S 67° 47′ 22.80" E
Ahead = S 24° 48′ 58.60" E
Chord Bear = S 46° 18′ 10.70" E

Course from PT SUP_R_27014 to SUP272 S 24° 05′ 17.96" E Dist 64.5035

Point SUP272 N 13,758,113.6221 E 3,217,664.0335 Sta 33+14.42

==========
Ending chain SUP_R_270 description

NO.	DATE	REVISION	APPROVED

STATE OF TEXAS
JOHANNA TORRES
130063
LICENSED
PROFESSIONAL ENGINEER
johannatorres
8/1/2023

Texas Department of Transportation
©2023

JONES|CARTER
Texas Board of Professional Engineers Registration No. F-23290
4350 Lockhill Selma Rd, Suite 100• San Antonio, Texas 78249 •210.494.5511

SH 96, FM 270
HORIZONTAL
ALIGNMENT DATA

SHEET 18 OF 18

DRAWN	FED. RD. DIV. NO.	FEDERAL AID PROJECT NO.		HIGHWAY NO.
AA	06			FM 270, ETC
DESIGNED	STATE	DIST.	COUNTY	SHEET NO.
JT	TEXAS	HOUSTON	GALVESTON	103
CHECKED	CONT.	SECT.	JOB	
NG	0912	73	215	
APPROVED				
DD				

PLOTDRIVER: LCBF.pltcfg PENTABLE: LCBF.tbl
DATE: 8/1/2023 11:53:04 AM USER: sss
FILE: c:\bms\pwe101-01\stela.staver-scull\dms22646\LCBF_HALN_18.dgn

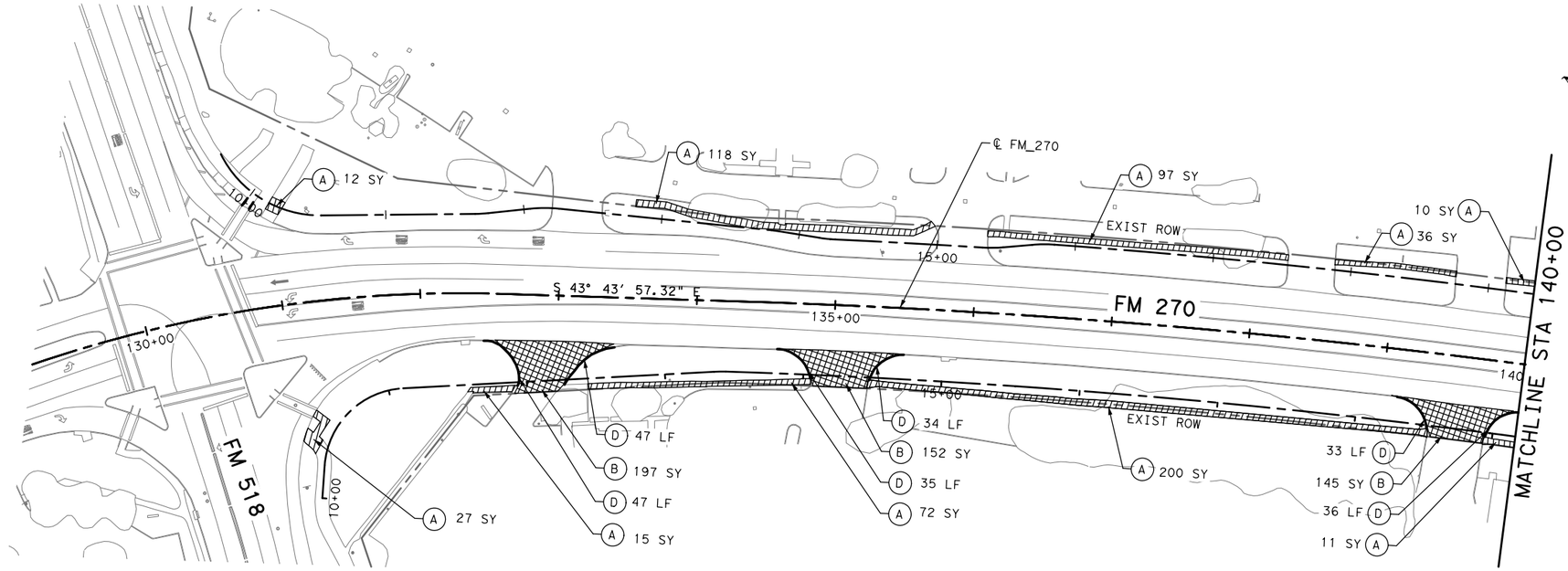

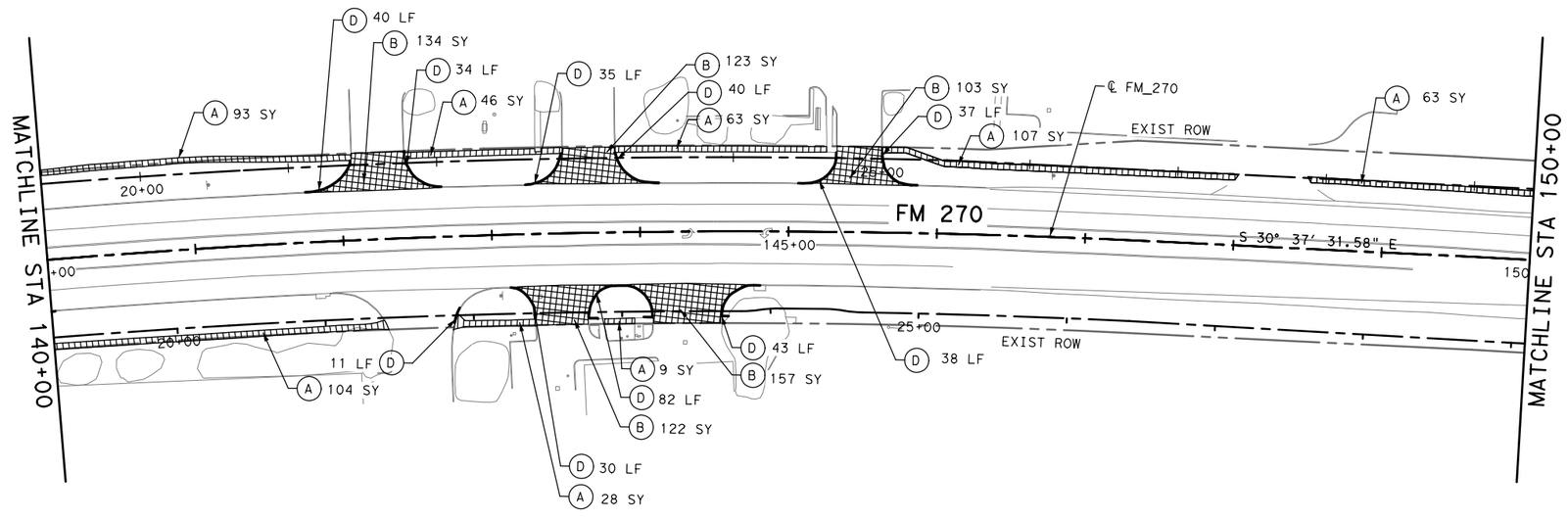

0' 25' 50' 100'

LEGEND:

- EXISTING ROW
- (A) REMOVE CONC (SIDEWALK OR RAMP)
- (B) REMOVE CONC (DRVWY)
- (C) REMOVE STAB BASE AND ASPHALT PAV (13"-18")
- (D) REMOVE CONC (CURB)
- (E) REMOVE CONC (MEDIANS)
- (F) REMOVE STR (BOX CULVERT)
- (G) REMOVE STR (SET)
- (H) REMOVE STR (HEADWALL)
- (I) REMOVE STR (PIPE)
- (J) REMOVE STR (DRIVEWAY CULVERT)

NO.	DATE	REVISION	APPROVED

STATE OF TEXAS
JOHANNA TORRES
130063
LICENSED
PROFESSIONAL ENGINEER
johannatorres
8/1/2023

Texas Department of Transportation
©2023

JONES|CARTER
Texas Board of Professional Engineers Registration No. F-23290
4350 Lockhill Selma Rd, Suite 100• San Antonio, Texas 78249 •210.494.5511

SH 96, FM 270
REMOVAL LAYOUT

BEGIN PROJECT TO FM 270 STA 150+00

SHEET 1 OF 16

DRAWN	FED.RD. DIV.NO.	FEDERAL AID PROJECT NO.		HIGHWAY NO.
AA	06			FM 270, ETC
DESIGNED	STATE	DIST.	COUNTY	SHEET NO.
JT	TEXAS	HOUSTON	GALVESTON	104
CHECKED	CONT.	SECT.	JOB	
NG	0912	73	215	
APPROVED				
DD				

PENTABLE:LCBF.tbl
PLOTDRIVER:LCBF.pltcfg
DATE:8/1/2023 8:39:45 PM USER:sss
FILE:c:\bms\pwe101-01\stela.staver-scul1\dms22657\LCBF_REM_01.dgn

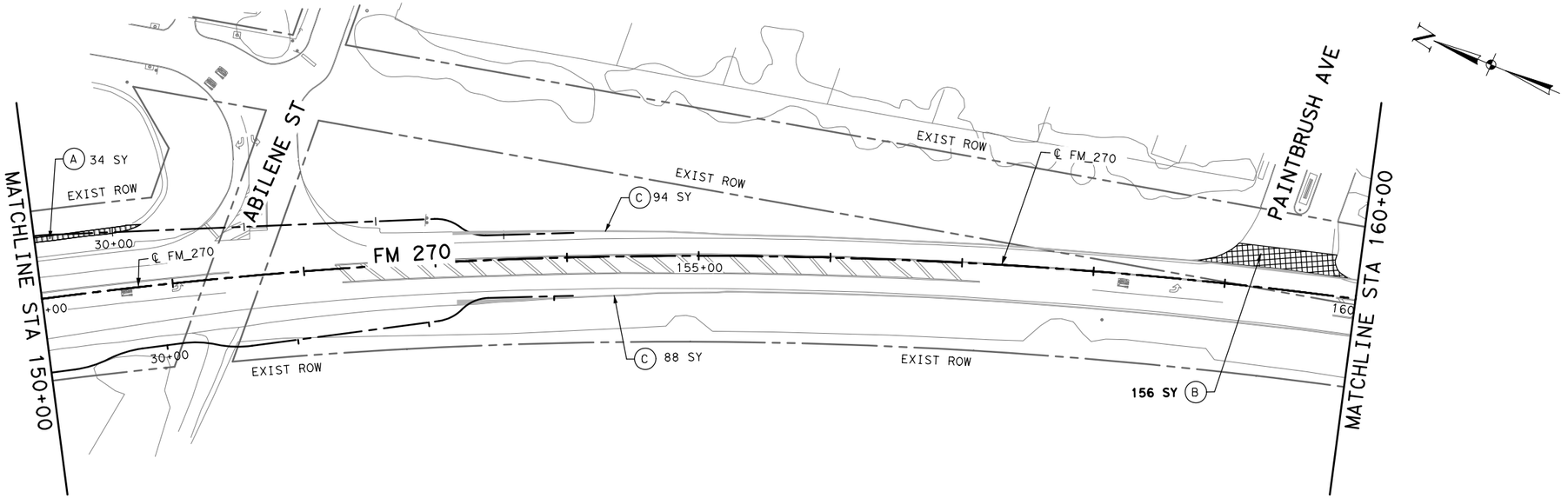

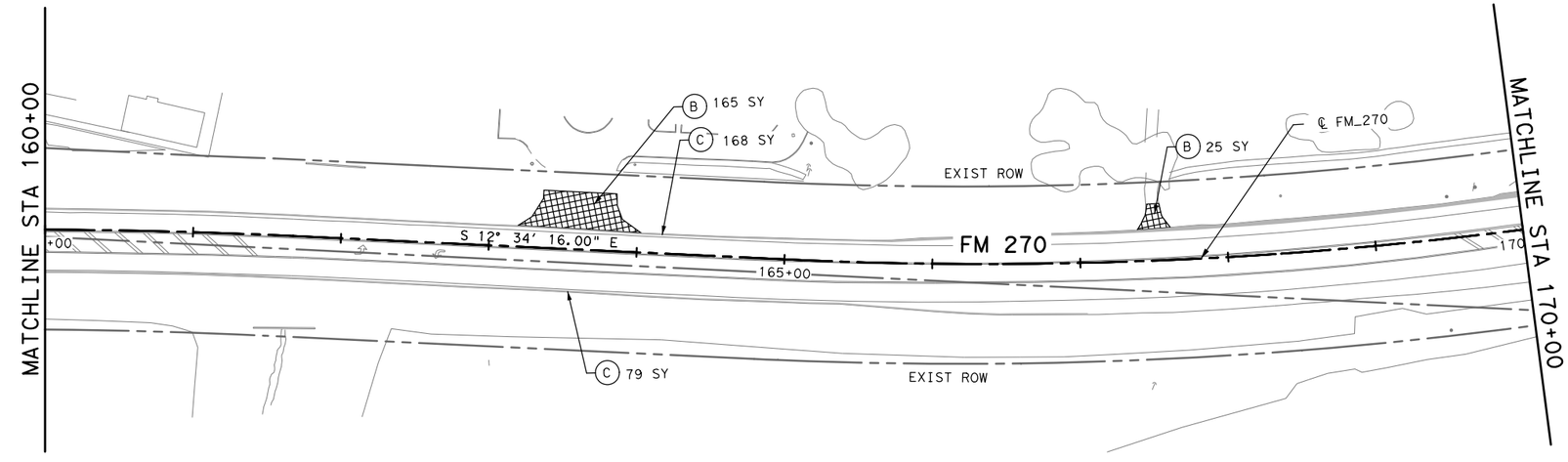

0' 25' 50' 100'

N

LEGEND:

- EXISTING ROW
- (A) REMOVE CONC (SIDEWALK OR RAMP)
- (B) REMOVE CONC (DRVWY)
- (C) REMOVE STAB BASE AND ASPHALT PAV (13"-18")
- (D) REMOVE CONC (CURB)
- (E) REMOVE CONC (MEDIANS)
- (F) REMOVE STR (BOX CULVERT)
- (G) REMOVE STR (SET)
- (H) REMOVE STR (HEADWALL)
- (I) REMOVE STR (PIPE)
- (J) REMOVE STR (DRIVEWAY CULVERT)

NO.	DATE	REVISION	APPROVED

STATE OF TEXAS
JOHANNA TORRES
130063
LICENSED
PROFESSIONAL ENGINEER
johannatorres
8/1/2023

Texas Department of Transportation
©2023

JONES|CARTER
Texas Board of Professional Engineers Registration No. F-23290
4350 Lockhill Selma Rd, Suite 100• San Antonio, Texas 78249 • 210.494.5511

SH 96, FM 270
REMOVAL LAYOUT

FM 270 STA 150+00 TO FM 270 STA 170+00

SHEET 2 OF 16

DRAWN	FED.RD. DIV.NO.	FEDERAL AID PROJECT NO.		HIGHWAY NO.
AA	06			FM 270, ETC
DESIGNED	STATE	DIST.	COUNTY	SHEET NO.
JT	TEXAS	HOUSTON	GALVESTON	105
CHECKED	CONT.	SECT.	JOB	
NG	0912	73	215	
APPROVED				
DD				

PLOTDRIVER: LCBF.pltcfg
PENTABLE: LCBF.tbl
DATE: 8/1/2023 8:39:46 PM USER: sss
FILE: c:\bms\pwe101-01\stela.staver-scull\dms22657\LCBF_REM_02.dgn

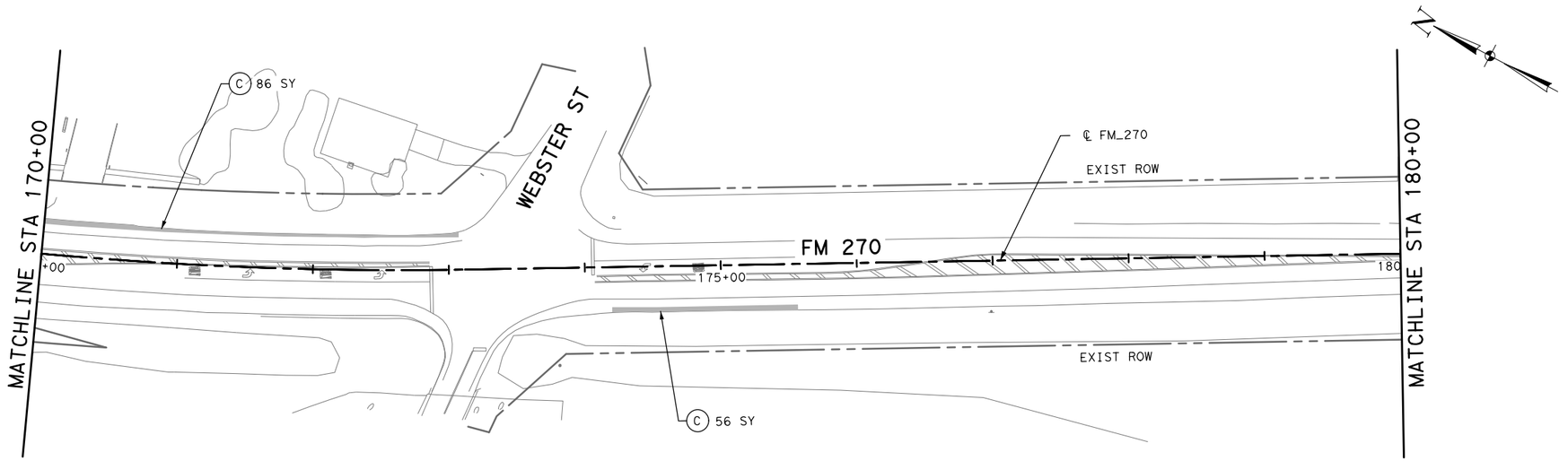

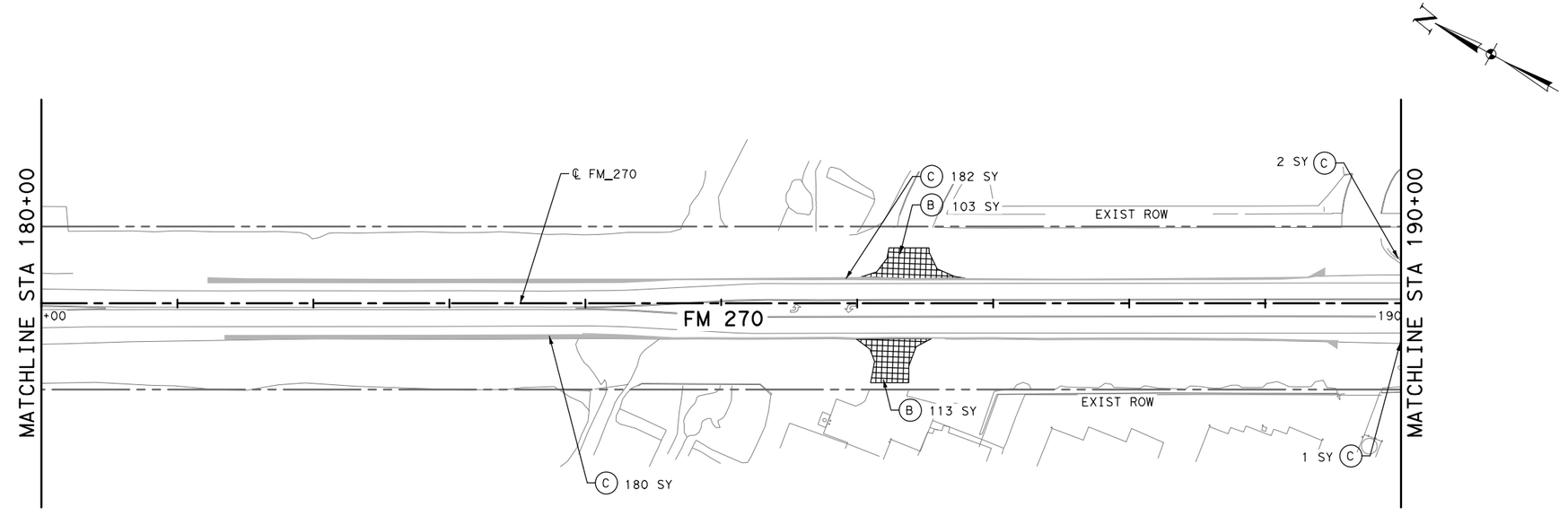

0′ 25′ 50′ 100′

LEGEND:

- EXISTING ROW
- (A) REMOVE CONC (SIDEWALK OR RAMP)
- (B) REMOVE CONC (DRVWY)
- (C) REMOVE STAB BASE AND ASPHALT PAV (13"-18")
- (D) REMOVE CONC (CURB)
- (E) REMOVE CONC (MEDIANS)
- (F) REMOVE STR (BOX CULVERT)
- (G) REMOVE STR (SET)
- (H) REMOVE STR (HEADWALL)
- (I) REMOVE STR (PIPE)
- (J) REMOVE STR (DRIVEWAY CULVERT)

NO.	DATE	REVISION	APPROVED

STATE OF TEXAS
JOHANNA TORRES
130063
LICENSED PROFESSIONAL ENGINEER
johannatorres
8/1/2023

Texas Department of Transportation
©2023

JONES|CARTER
Texas Board of Professional Engineers Registration No. F-23290
4350 Lockhill Selma Rd, Suite 100•San Antonio, Texas 78249•210.494.5511

SH 96, FM 270
REMOVAL LAYOUT

FM 270 STA 170+00 TO FM 270 STA 190+00

SHEET 3 OF 16

DRAWN	FED.RD. DIV.NO.	FEDERAL AID PROJECT NO.		HIGHWAY NO.
AA	06			FM 270, ETC
DESIGNED	STATE	DIST.	COUNTY	SHEET NO.
JT	TEXAS	HOUSTON	GALVESTON	106
CHECKED	CONT.	SECT.	JOB	
NG	0912	73	215	
APPROVED				
DD				

PLOTDRIVER: LCBF.pltcfg
PENTABLE: LCBF.tbl
DATE: 8/1/2023 8:39:48 PM USER: sss
FILE: c:\bms\pwe101-01\stela.staver-scull\dms22657\LCBF_REM_03.dgn

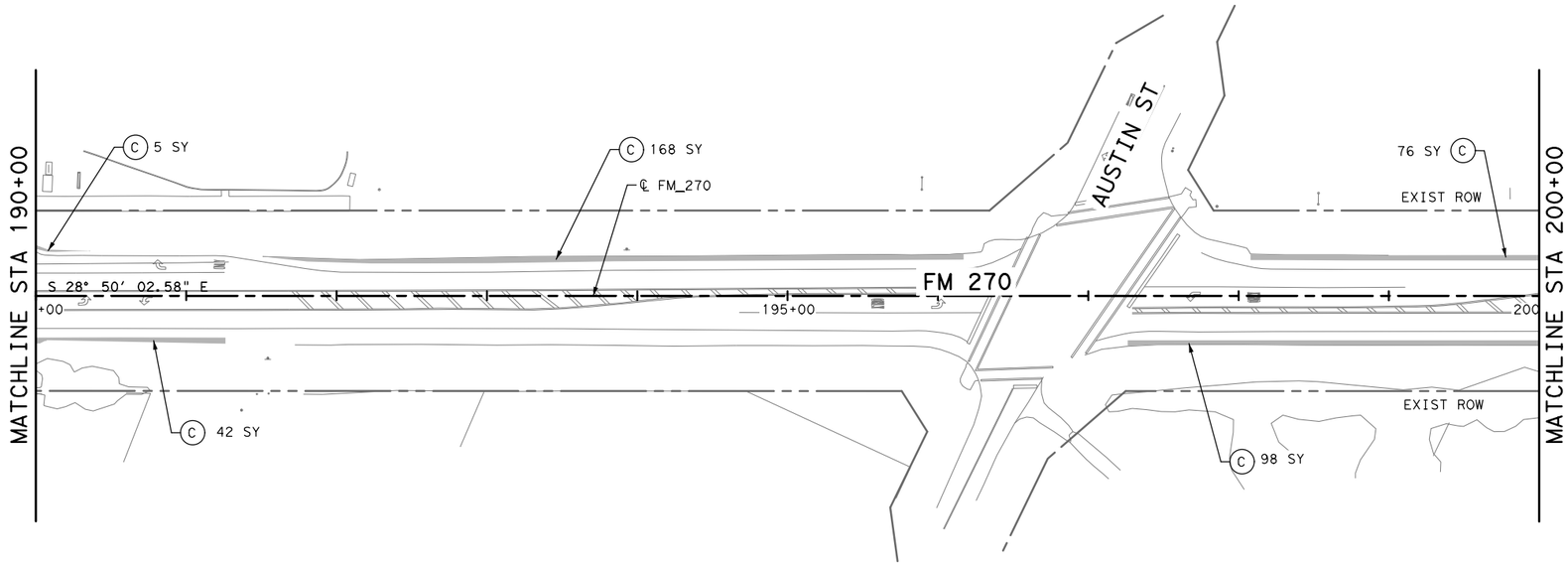

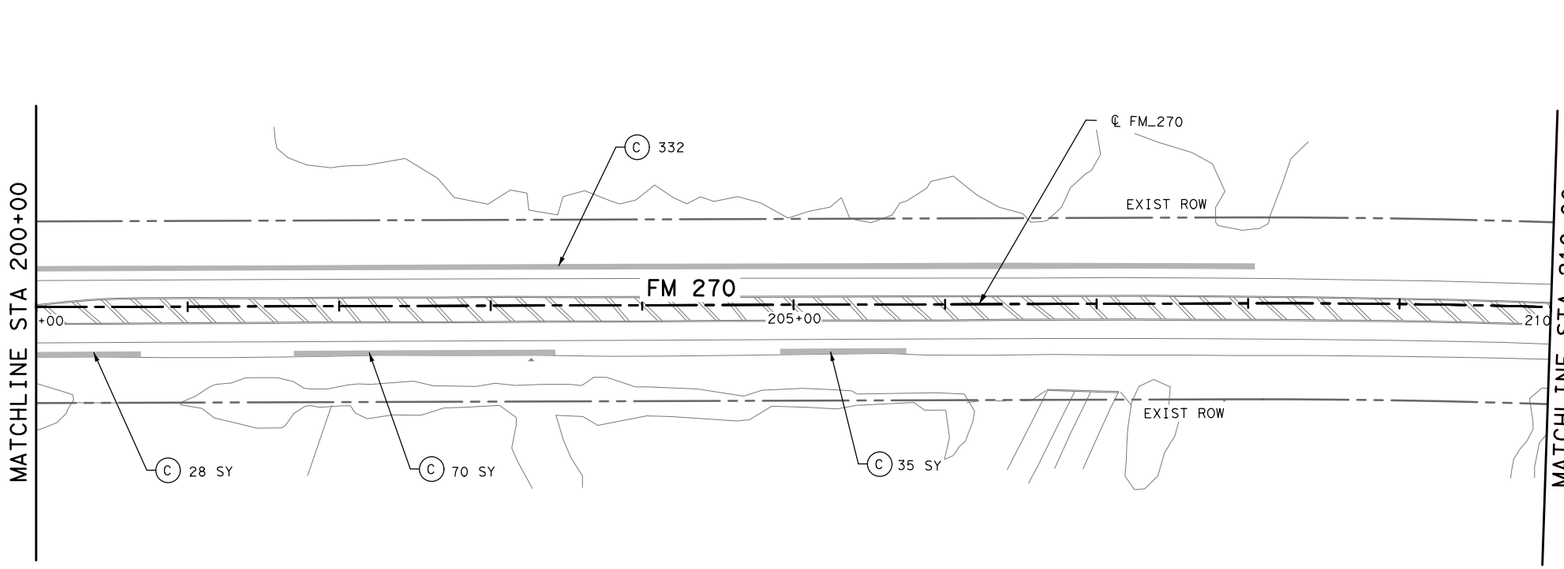

0' 25' 50' 100'

LEGEND:

- EXISTING ROW
- (A) REMOVE CONC (SIDEWALK OR RAMP)
- (B) REMOVE CONC (DRVWY)
- (C) REMOVE STAB BASE AND ASPHALT PAV (13"-18")
- (D) REMOVE CONC (CURB)
- (E) REMOVE CONC (MEDIANS)
- (F) REMOVE STR (BOX CULVERT)
- (G) REMOVE STR (SET)
- (H) REMOVE STR (HEADWALL)
- (I) REMOVE STR (PIPE)
- (J) REMOVE STR (DRIVEWAY CULVERT)

NO.	DATE	REVISION	APPROVED

STATE OF TEXAS
JOHANNA TORRES
130063
LICENSED PROFESSIONAL ENGINEER
johannatorres
8/1/2023

Texas Department of Transportation
©2023

JONES|CARTER
Texas Board of Professional Engineers Registration No. F-23290
4350 Lockhill Selma Rd, Suite 100• San Antonio, Texas 78249 • 210.494.5511

SH 96, FM 270
REMOVAL LAYOUT

FM 270 STA 190+00 TO FM 270 STA 210+00

SHEET 4 OF 16

DRAWN	FED.RD. DIV.NO.	FEDERAL AID PROJECT NO.		HIGHWAY NO.
AA	06			FM 270, ETC
DESIGNED	STATE	DIST.	COUNTY	SHEET NO.
JT	TEXAS	HOUSTON	GALVESTON	107
CHECKED	CONT.	SECT.	JOB	
NG	0912	73	215	
APPROVED				
DD				

PLOTDRIVER: LCBF.pltcfg
PENTABLE: LCBF.tbl
DATE: 8/1/2023 8:39:50 PM USER: sss
FILE: c:\bms\pwe101-01\stela.staver-scull\dms22657\LCBF_REM_04.dgn

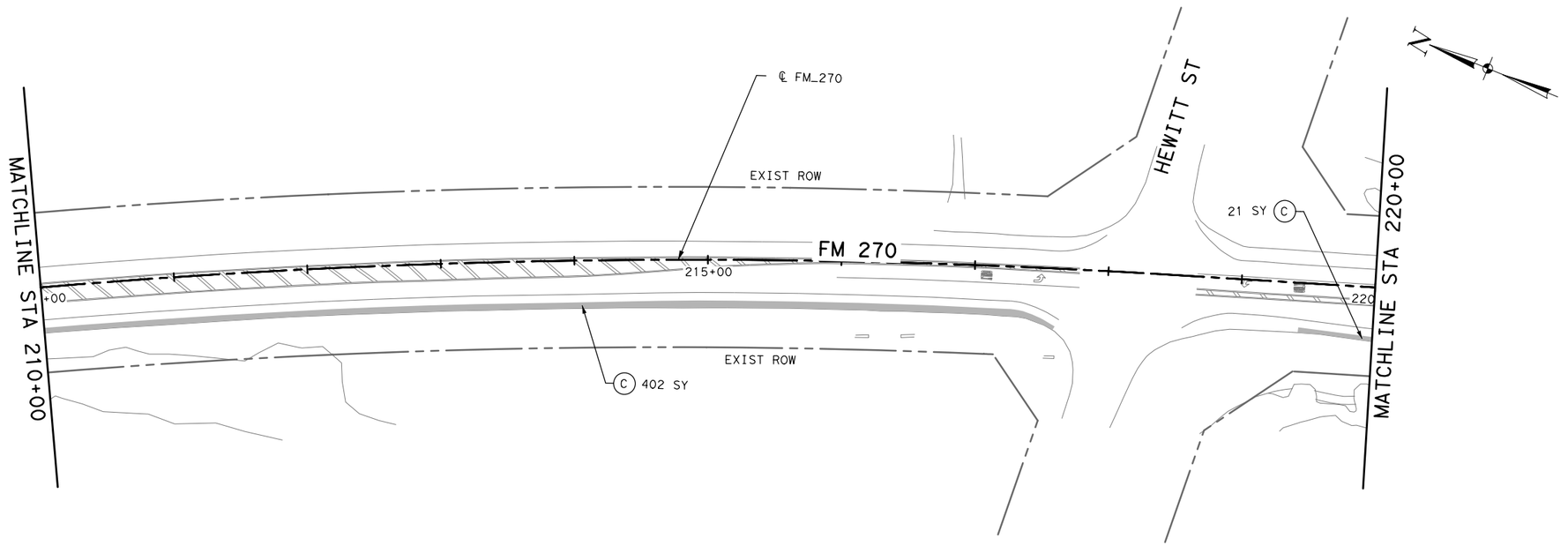

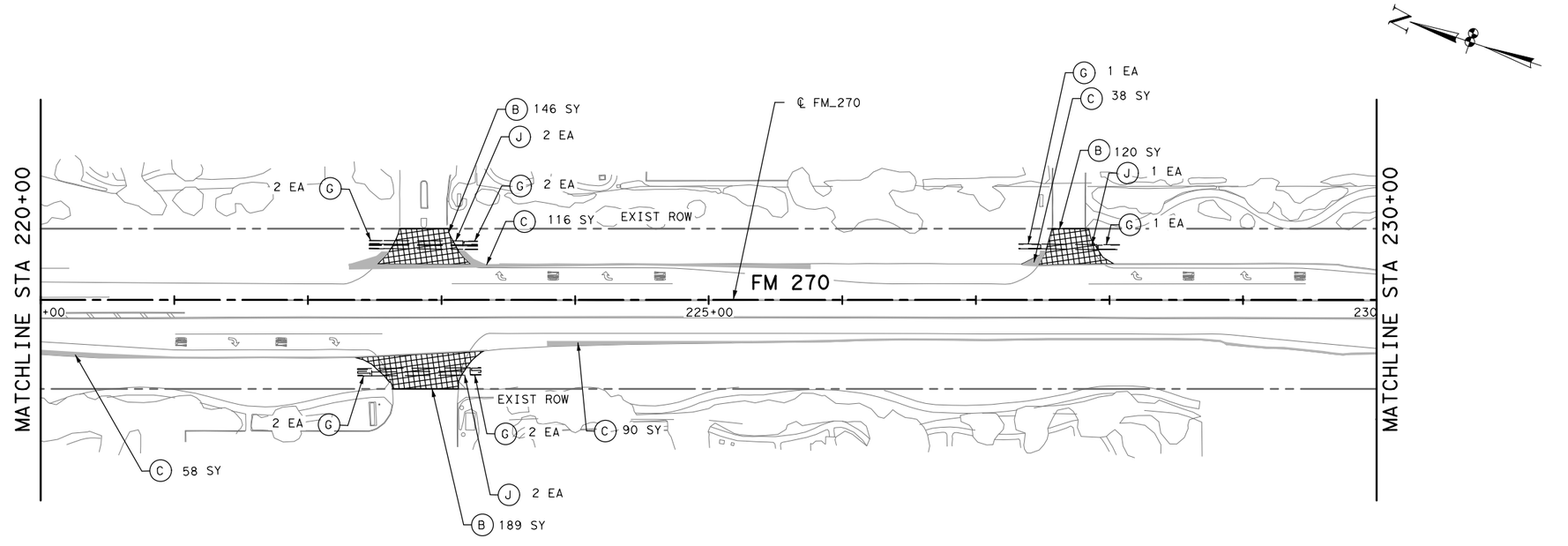

0' 25' 50' 100'

LEGEND:

- EXISTING ROW
- (A) REMOVE CONC (SIDEWALK OR RAMP)
- (B) REMOVE CONC (DRVWY)
- (C) REMOVE STAB BASE AND ASPHALT PAV (13"-18")
- (D) REMOVE CONC (CURB)
- (E) REMOVE CONC (MEDIANS)
- (F) REMOVE STR (BOX CULVERT)
- (G) REMOVE STR (SET)
- (H) REMOVE STR (HEADWALL)
- (I) REMOVE STR (PIPE)
- (J) REMOVE STR (DRIVEWAY CULVERT)

NO.	DATE	REVISION	APPROVED

STATE OF TEXAS
JOHANNA TORRES
130063
LICENSED PROFESSIONAL ENGINEER
johannatorres
8/1/2023

Texas Department of Transportation
©2023

JONES|CARTER
Texas Board of Professional Engineers Registration No. F-23290
4350 Lockhill Selma Rd, Suite 100• San Antonio, Texas 78249 •210.494.5511

SH 96, FM 270
REMOVAL LAYOUT

FM 270 STA 210+00 TO FM 270 STA 230+00

SHEET 5 OF 16

DRAWN	FED.RD. DIV.NO.	FEDERAL AID PROJECT NO.		HIGHWAY NO.
AA	06			FM 270, ETC
DESIGNED	STATE	DIST.	COUNTY	SHEET NO.
JT	TEXAS	HOUSTON	GALVESTON	108
CHECKED	CONT.	SECT.	JOB	
NG	0912	73	215	
APPROVED				
DD				

PENTABLE: LCBF.tbl
PLOTDRIVER: LCBF.pltcfg
DATE: 8/1/2023 8:39:52 PM USER: sss
FILE: c:\bms\pwe101-01\stela.staver-scull\dms22657\LCBF_REM_05.dgn

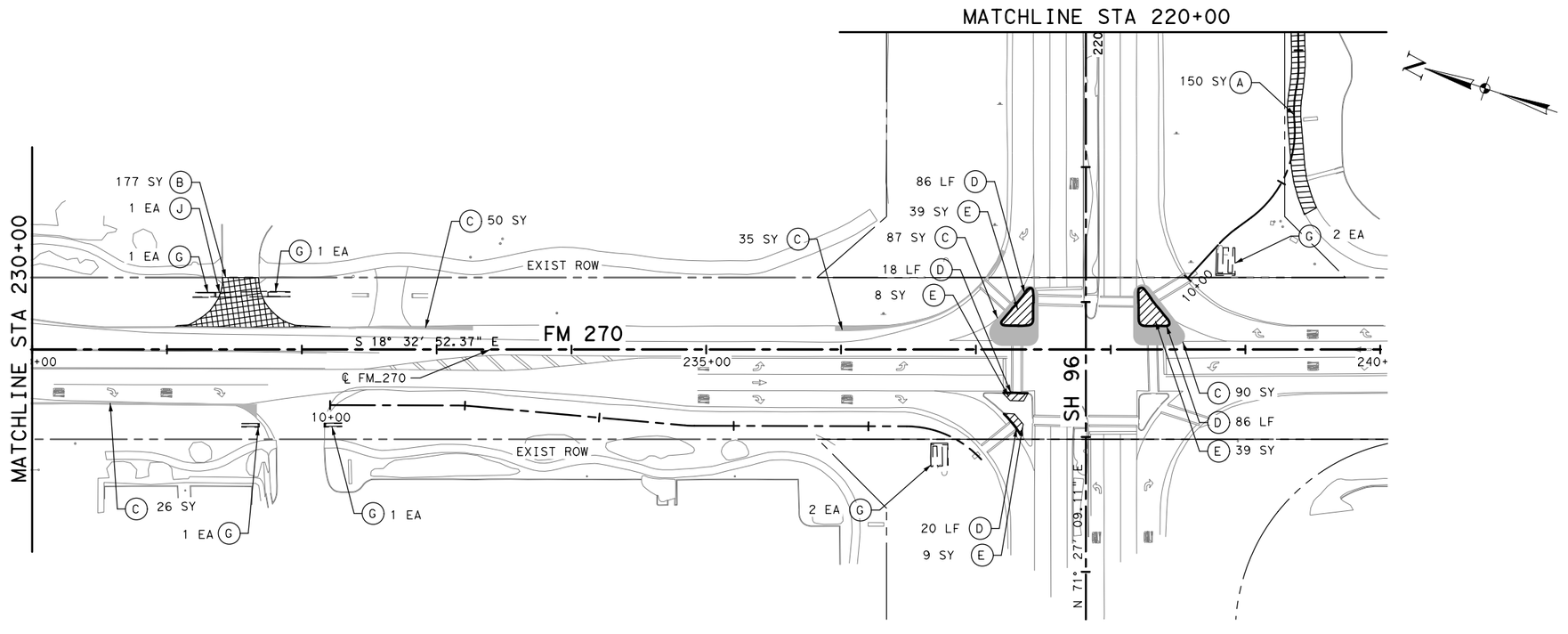

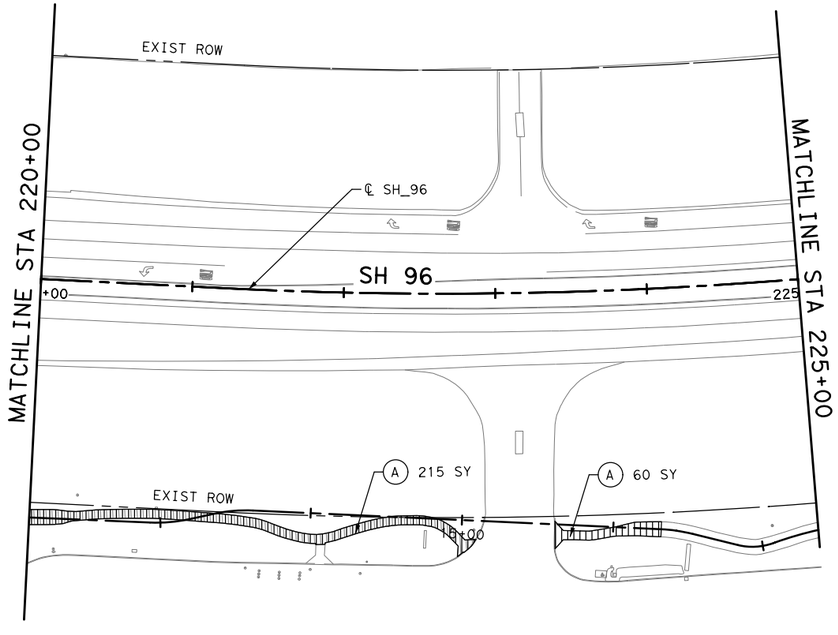

0' 25' 50' 100'

LEGEND:

- EXISTING ROW
- (A) REMOVE CONC (SIDEWALK OR RAMP)
- (B) REMOVE CONC (DRVWY)
- (C) REMOVE STAB BASE AND ASPHALT PAV (13"-18")
- (D) REMOVE CONC (CURB)
- (E) REMOVE CONC (MEDIANS)
- (F) REMOVE STR (BOX CULVERT)
- (G) REMOVE STR (SET)
- (H) REMOVE STR (HEADWALL)
- (I) REMOVE STR (PIPE)
- (J) REMOVE STR (DRIVEWAY CULVERT)

NO.	DATE	REVISION	APPROVED

STATE OF TEXAS
JOHANNA TORRES
130063
LICENSED PROFESSIONAL ENGINEER
johannatorres
8/1/2023

Texas Department of Transportation
©2023

JONES|CARTER
Texas Board of Professional Engineers Registration No. F-23290
4350 Lockhill Selma Rd, Suite 100• San Antonio, Texas 78249 • 210.494.5511

SH 96, FM 270
REMOVAL LAYOUT

FM 270 STA 230+00 TO SH 96 STA 220+00

SH 96 STA 220+00 TO SH 96 STA 225+00

SHEET 6 OF 16

DRAWN	FED.RD. DIV.NO.	FEDERAL AID PROJECT NO.		HIGHWAY NO.
AA	06			FM 270, ETC
DESIGNED	STATE	DIST.	COUNTY	SHEET NO.
JT	TEXAS	HOUSTON	GALVESTON	109
CHECKED	CONT.	SECT.	JOB	
NG	0912	73	215	
APPROVED				
DD				

PENTABLE:LCBF.tbl
PLOTDRIVER:LCBF.pltcfg
DATE:8/1/2023 8:39:54 PM USER:sss
FILE:c:\bms\pwe101-01\stela.staver-scull\dms22657\LCBF_REM_06.dgn

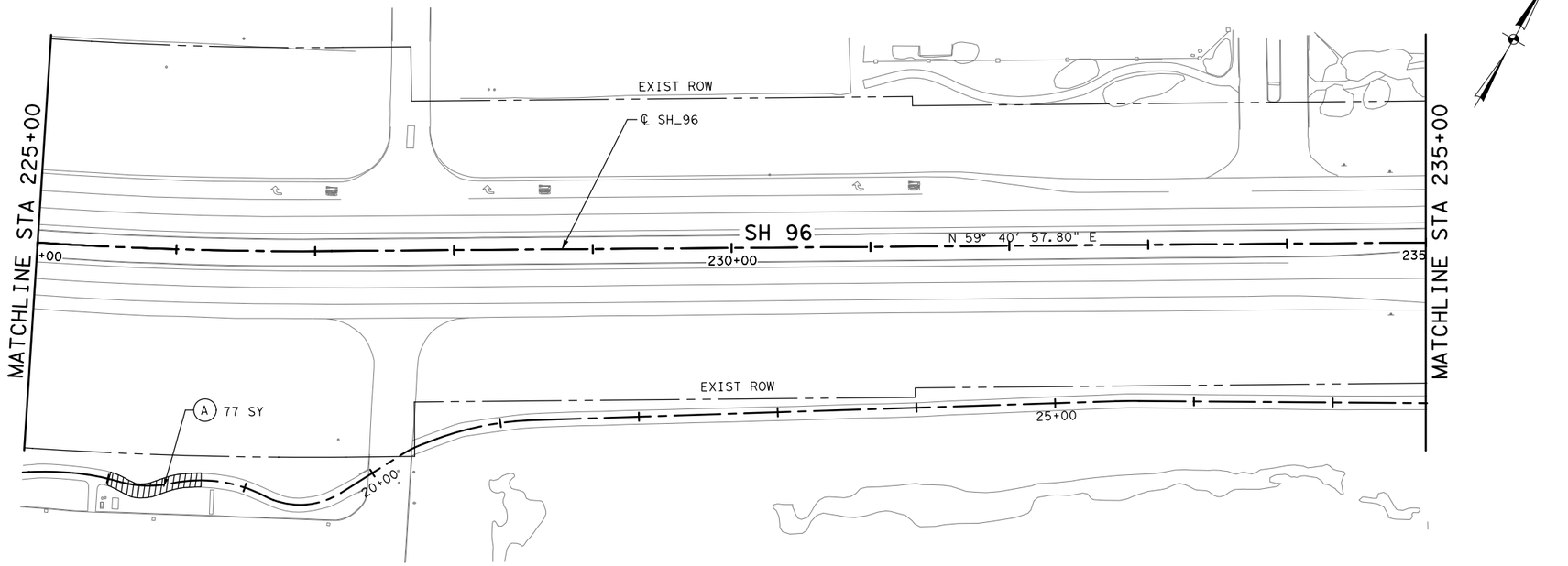

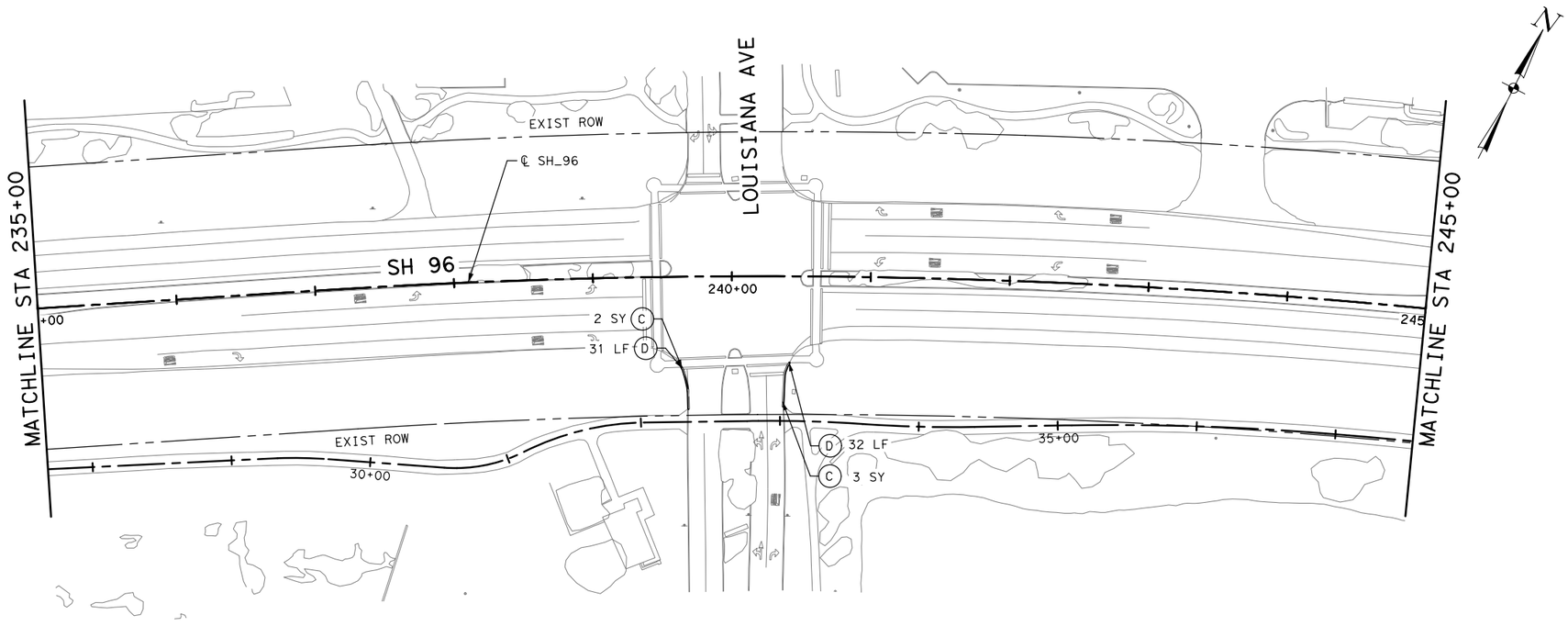

0' 25' 50' 100'

LEGEND:

- EXISTING ROW
- (A) REMOVE CONC (SIDEWALK OR RAMP)
- (B) REMOVE CONC (DRVWY)
- (C) REMOVE STAB BASE AND ASPHALT PAV (13"-18")
- (D) REMOVE CONC (CURB)
- (E) REMOVE CONC (MEDIANS)
- (F) REMOVE STR (BOX CULVERT)
- (G) REMOVE STR (SET)
- (H) REMOVE STR (HEADWALL)
- (I) REMOVE STR (PIPE)
- (J) REMOVE STR (DRIVEWAY CULVERT)

NO.	DATE	REVISION	APPROVED

STATE OF TEXAS
JOHANNA TORRES
130063
LICENSED PROFESSIONAL ENGINEER
johannatorres
8/1/2023

Texas Department of Transportation
©2023

JONES|CARTER
Texas Board of Professional Engineers Registration No. F-23290
4350 Lockhill Selma Rd, Suite 100• San Antonio, Texas 78249 • 210.494.5511

SH 96, FM 270
REMOVAL LAYOUT

SH 96 STA 225+00 TO SH 96 STA 245+00

SHEET 7 OF 16

DRAWN	FED.RD. DIV.NO.	FEDERAL AID PROJECT NO.		HIGHWAY NO.
AA	06			FM 270, ETC
DESIGNED	STATE	DIST.	COUNTY	SHEET NO.
JT	TEXAS	HOUSTON	GALVESTON	110
CHECKED	CONT.	SECT.	JOB	
NG	0912	73	215	
APPROVED				
DD				

PENTABLE:LCBF.tbl
PLOTDRIVER:LCBF.pltcfg
DATE:8/1/2023 8:39:57 PM USER:sss
FILE:c:\bms\pwe101-01\stela.staver-scull\dms22657\LCBF_REM_07.dgn

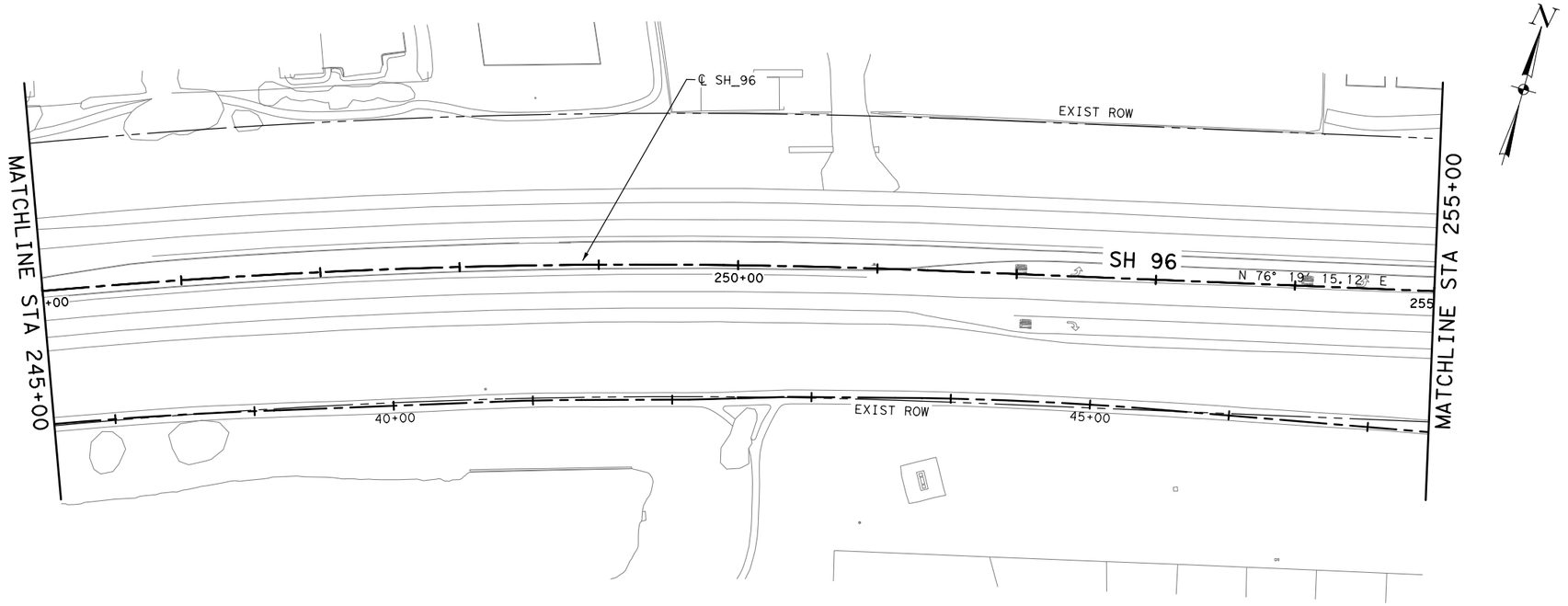

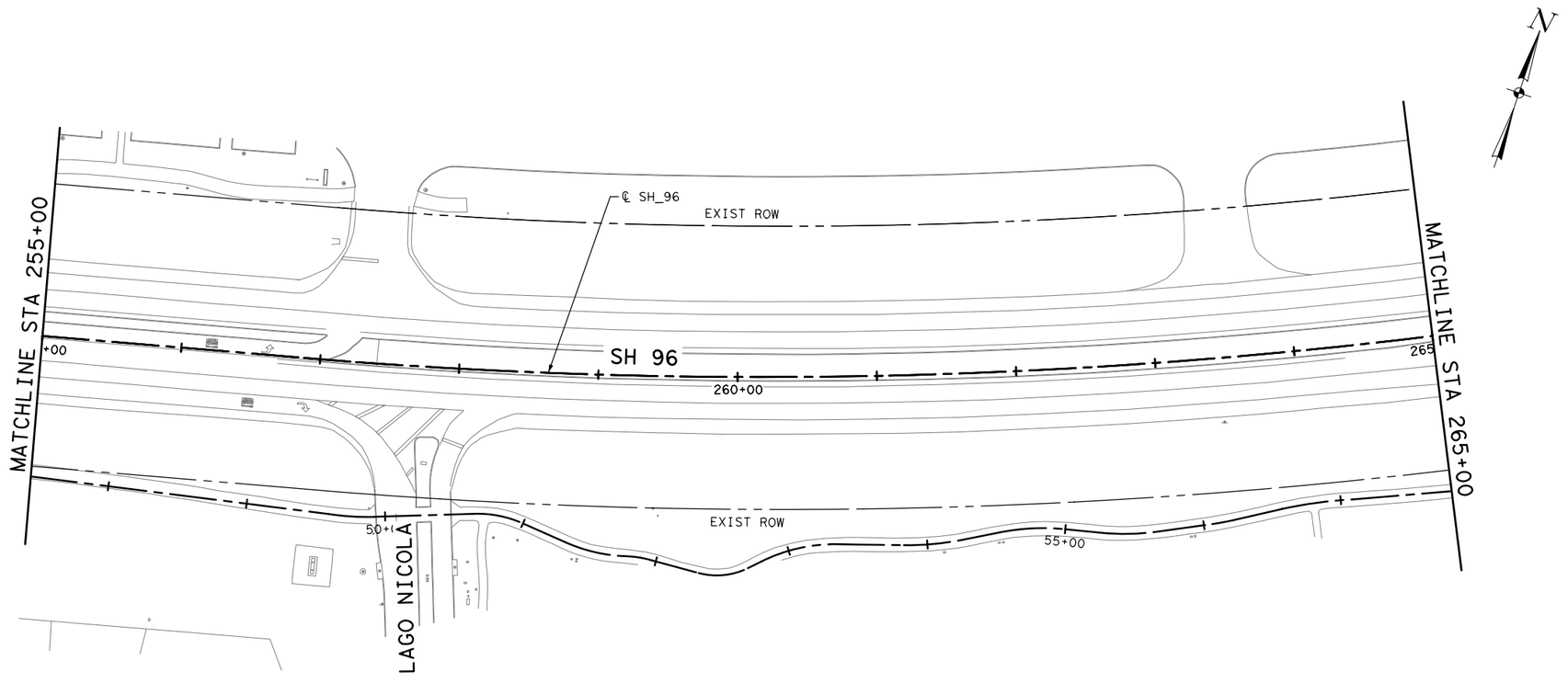

LEGEND:

- EXISTING ROW
- (A) REMOVE CONC (SIDEWALK OR RAMP)
- (B) REMOVE CONC (DRVWY)
- (C) REMOVE STAB BASE AND ASPHALT PAV (13"-18")
- (D) REMOVE CONC (CURB)
- (E) REMOVE CONC (MEDIANS)
- (F) REMOVE STR (BOX CULVERT)
- (G) REMOVE STR (SET)
- (H) REMOVE STR (HEADWALL)
- (I) REMOVE STR (PIPE)
- (J) REMOVE STR (DRIVEWAY CULVERT)

NO.	DATE	REVISION	APPROVED

STATE OF TEXAS
JOHANNA TORRES
130063
LICENSED
PROFESSIONAL ENGINEER
johannatorres
8/1/2023

Texas Department of Transportation
©2023

JONES|CARTER
Texas Board of Professional Engineers Registration No. F-23290
4350 Lockhill Selma Rd, Suite 100•San Antonio, Texas 78249•210.494.5511

SH 96, FM 270
REMOVAL LAYOUT

SH 96 STA 245+00 TO SH 96 STA 265+00

SHEET 8 OF 16

DRAWN	FED.RD. DIV.NO.	FEDERAL AID PROJECT NO.		HIGHWAY NO.
AA	06			FM 270, ETC
DESIGNED	STATE	DIST.	COUNTY	SHEET NO.
JT	TEXAS	HOUSTON	GALVESTON	111
CHECKED	CONT.	SECT.	JOB	
NG	0912	73	215	
APPROVED				
DD				

PENTABLE:LCBF.tbl
PLOTDRIVER:LCBF.pltcfg
DATE:8/1/2023 8:39:59 PM USER:sss
FILE:c:\bms\pwe101-01\stela.staver-scull\dms22657\LCBF_REM_08.dgn

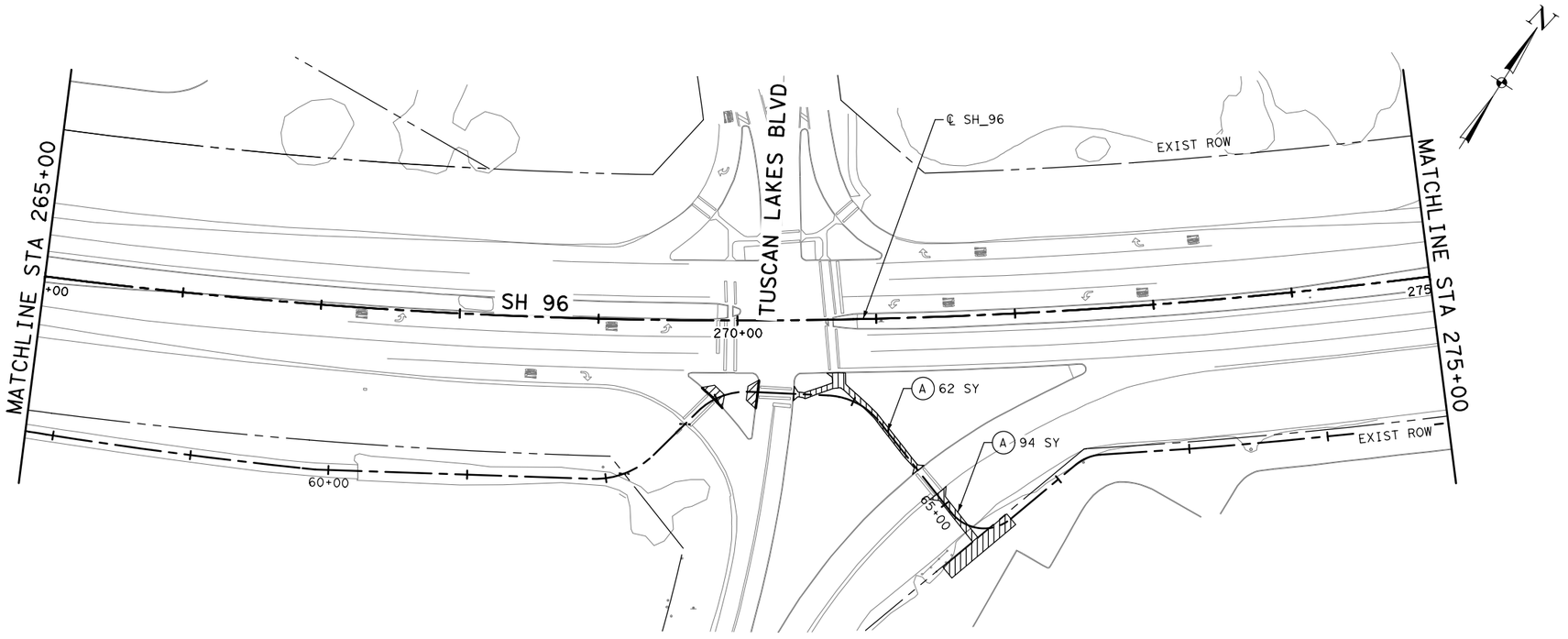

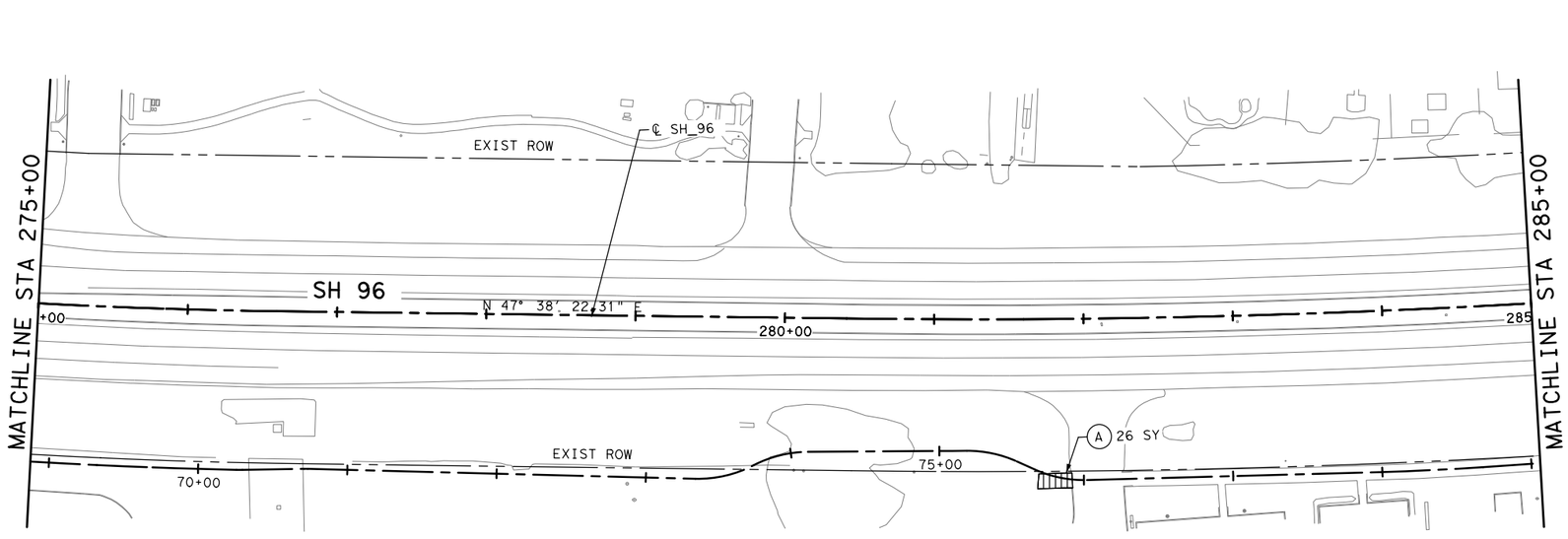

0' 25' 50' 100'

LEGEND:

- EXISTING ROW
- (A) REMOVE CONC (SIDEWALK OR RAMP)
- (B) REMOVE CONC (DRVWY)
- (C) REMOVE STAB BASE AND ASPHALT PAV (13"-18")
- (D) REMOVE CONC (CURB)
- (E) REMOVE CONC (MEDIANS)
- (F) REMOVE STR (BOX CULVERT)
- (G) REMOVE STR (SET)
- (H) REMOVE STR (HEADWALL)
- (I) REMOVE STR (PIPE)
- (J) REMOVE STR (DRIVEWAY CULVERT)

NO.	DATE	REVISION	APPROVED

STATE OF TEXAS
JOHANNA TORRES
130063
LICENSED PROFESSIONAL ENGINEER
johannatorres
8/1/2023

Texas Department of Transportation
©2023

JONES|CARTER
Texas Board of Professional Engineers Registration No. F-23290
4350 Lockhill Selma Rd, Suite 100• San Antonio, Texas 78249 •210.494.5511

SH 96, FM 270
REMOVAL LAYOUT

SH 96 STA 265+00 TO SH 96 STA 285+00

SHEET 9 OF 16

DRAWN	FED.RD. DIV.NO.	FEDERAL AID PROJECT NO.		HIGHWAY NO.
AA	06			FM 270, ETC
DESIGNED	STATE	DIST.	COUNTY	SHEET NO.
JT	TEXAS	HOUSTON	GALVESTON	112
CHECKED	CONT.	SECT.	JOB	
NG	0912	73	215	
APPROVED				
DD				

PLOTDRIVER: LCBF.pltcfg
PENTABLE: LCBF.tbl
DATE: 8/1/2023 8:40:02 PM USER: sss
FILE: c:\bms\pwe101-01\stela.staver-scull\dms22657\LCBF_REM_09.dgn

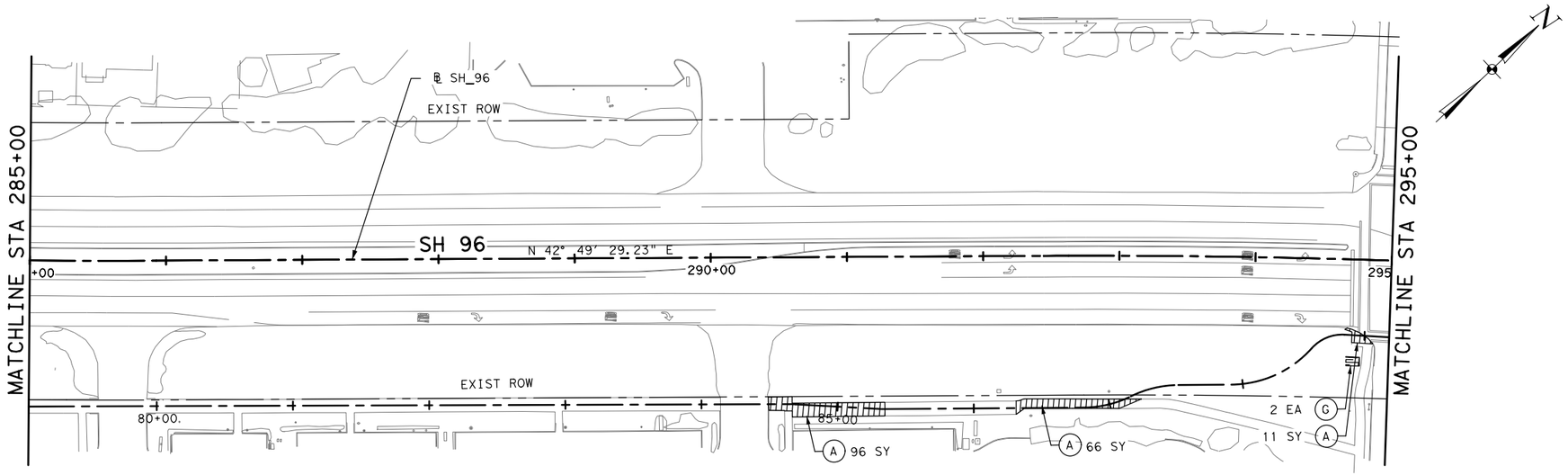

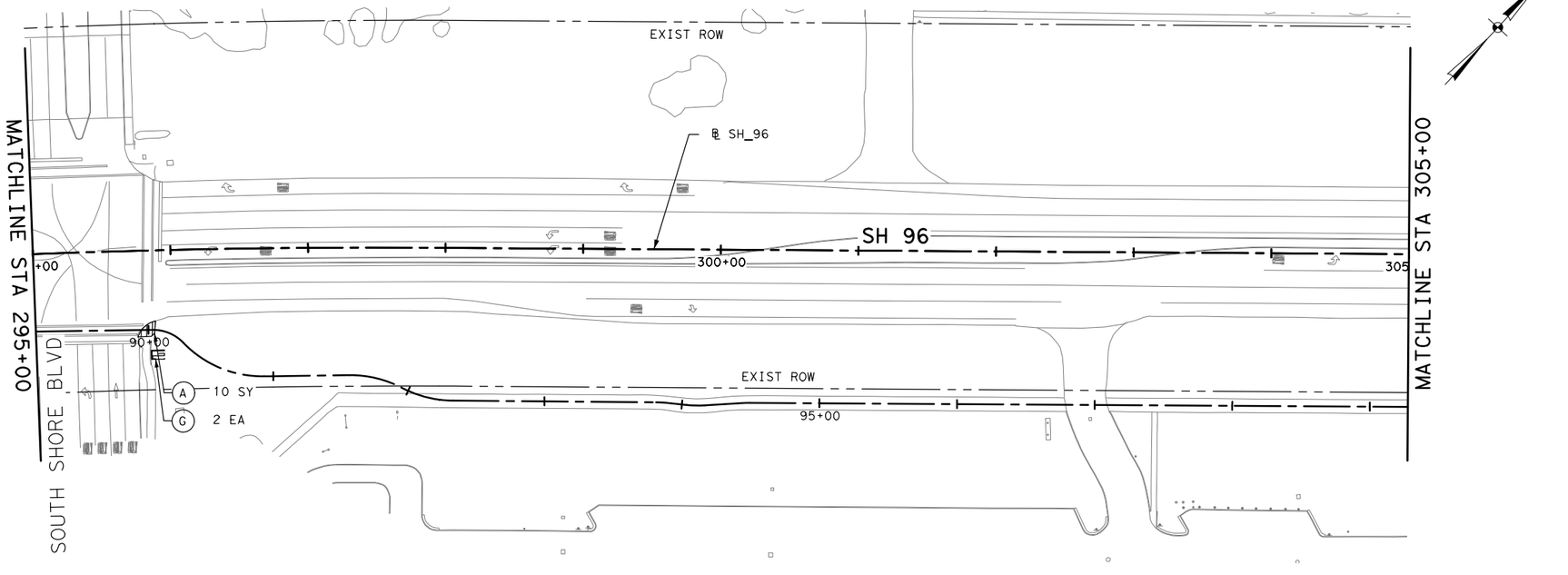

0' 25' 50' 100'

LEGEND:

- EXISTING ROW
- (A) REMOVE CONC (SIDEWALK OR RAMP)
- (B) REMOVE CONC (DRVWY)
- (C) REMOVE STAB BASE AND ASPHALT PAV (13"-18")
- (D) REMOVE CONC (CURB)
- (E) REMOVE CONC (MEDIANS)
- (F) REMOVE STR (BOX CULVERT)
- (G) REMOVE STR (SET)
- (H) REMOVE STR (HEADWALL)
- (I) REMOVE STR (PIPE)
- (J) REMOVE STR (DRIVEWAY CULVERT)

NO.	DATE	REVISION	APPROVED

STATE OF TEXAS
JOHANNA TORRES
130063
LICENSED PROFESSIONAL ENGINEER
johannatorres
8/1/2023

Texas Department of Transportation
©2023

JONES|CARTER
Texas Board of Professional Engineers Registration No. F-23290
4350 Lockhill Selma Rd, Suite 100• San Antonio, Texas 78249 • 210.494.5511

SH 96, FM 270
REMOVAL LAYOUT

SH 96 STA 285+00 TO SH 96 STA 305+00

SHEET 10 OF 16

DRAWN	FED.RD. DIV.NO.	FEDERAL AID PROJECT NO.		HIGHWAY NO.
AA	06			FM 270, ETC
DESIGNED	STATE	DIST.	COUNTY	SHEET NO.
JT	TEXAS	HOUSTON	GALVESTON	113
CHECKED	CONT.	SECT.	JOB	
NG	0912	73	215	
APPROVED				
DD				

PLOTDRIVER: LCBF.pltcfg PENTABLE: LCBF.tbl
DATE: 8/1/2023 8:40:04 PM USER: sss
FILE: c:\bms\pwe101-01\stela.staver-scu11\dms22657\LCBF_REM_10.dgn

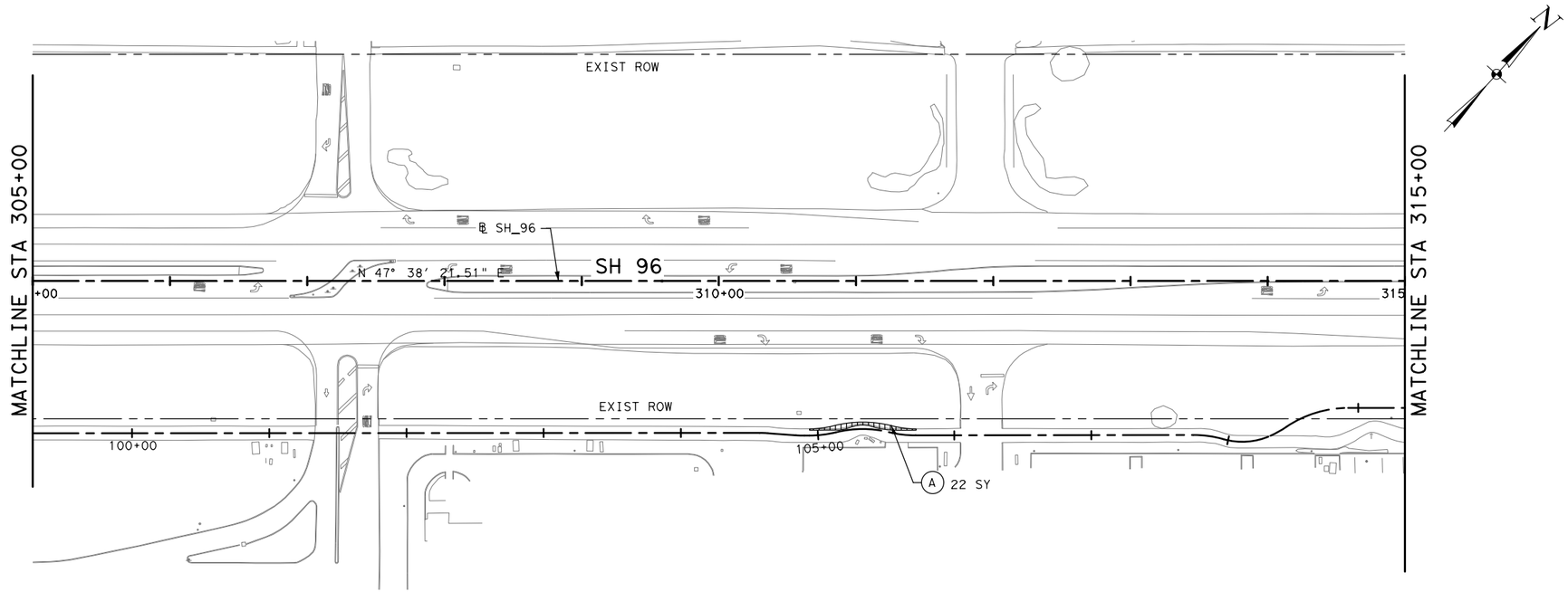

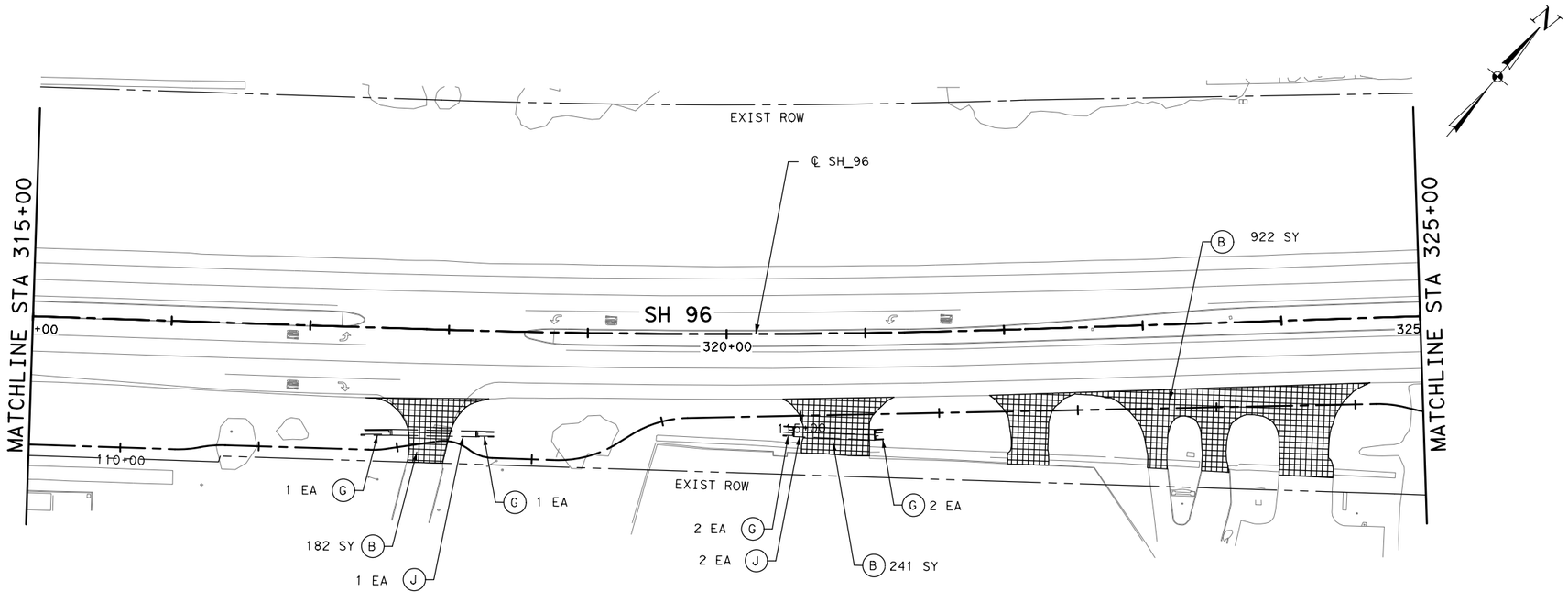

0' 25' 50' 100'

LEGEND:

- EXISTING ROW
- (A) REMOVE CONC (SIDEWALK OR RAMP)
- (B) REMOVE CONC (DRVWY)
- (C) REMOVE STAB BASE AND ASPHALT PAV (13"-18")
- (D) REMOVE CONC (CURB)
- (E) REMOVE CONC (MEDIANS)
- (F) REMOVE STR (BOX CULVERT)
- (G) REMOVE STR (SET)
- (H) REMOVE STR (HEADWALL)
- (I) REMOVE STR (PIPE)
- (J) REMOVE STR (DRIVEWAY CULVERT)

NO.	DATE	REVISION	APPROVED

STATE OF TEXAS
JOHANNA TORRES
130063
LICENSED
PROFESSIONAL ENGINEER
johannatorres
8/1/2023

Texas Department of Transportation
©2023

JONES|CARTER
Texas Board of Professional Engineers Registration No. F-23290
4350 Lockhill Selma Rd, Suite 100• San Antonio, Texas 78249 • 210.494.5511

SH 96, FM 270
REMOVAL LAYOUT

SH 96 STA 305+00 TO SH 96 STA 325+00

SHEET 11 OF 16

DRAWN	FED.RD. DIV.NO.	FEDERAL AID PROJECT NO.		HIGHWAY NO.
AA	06			FM 270, ETC
DESIGNED	STATE	DIST.	COUNTY	SHEET NO.
JT	TEXAS	HOUSTON	GALVESTON	114
CHECKED	CONT.	SECT.	JOB	
NG	0912	73	215	
APPROVED				
DD				

PLOTDRIVER: LCBF.pltcfg
PENTABLE: LCBF.tbl
DATE: 8/1/2023 8:40:07 PM USER: sss
FILE: c:\bms\pwe101-01\stela.staver-scull\dms22657\LCBF_REM_11.dgn

PLOTDRIVER: LCBF.pltcfg
PENTABLE: LCBF.tbl
DATE: 8/1/2023 8:40:09 PM USER: sss
FILE: c:\dms\pwe101-01\stela.staver-scull\dms22657\LCBF_REM_12.dgn

0' 25' 50' 100'

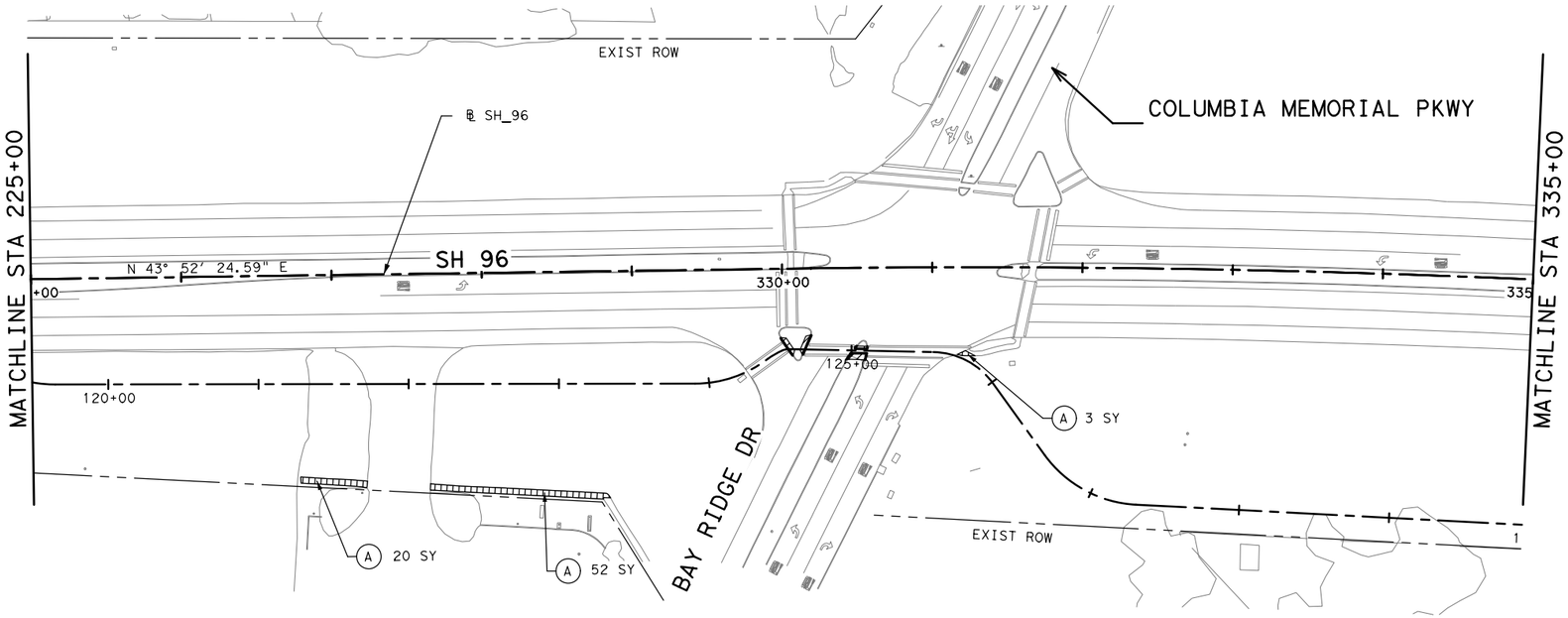

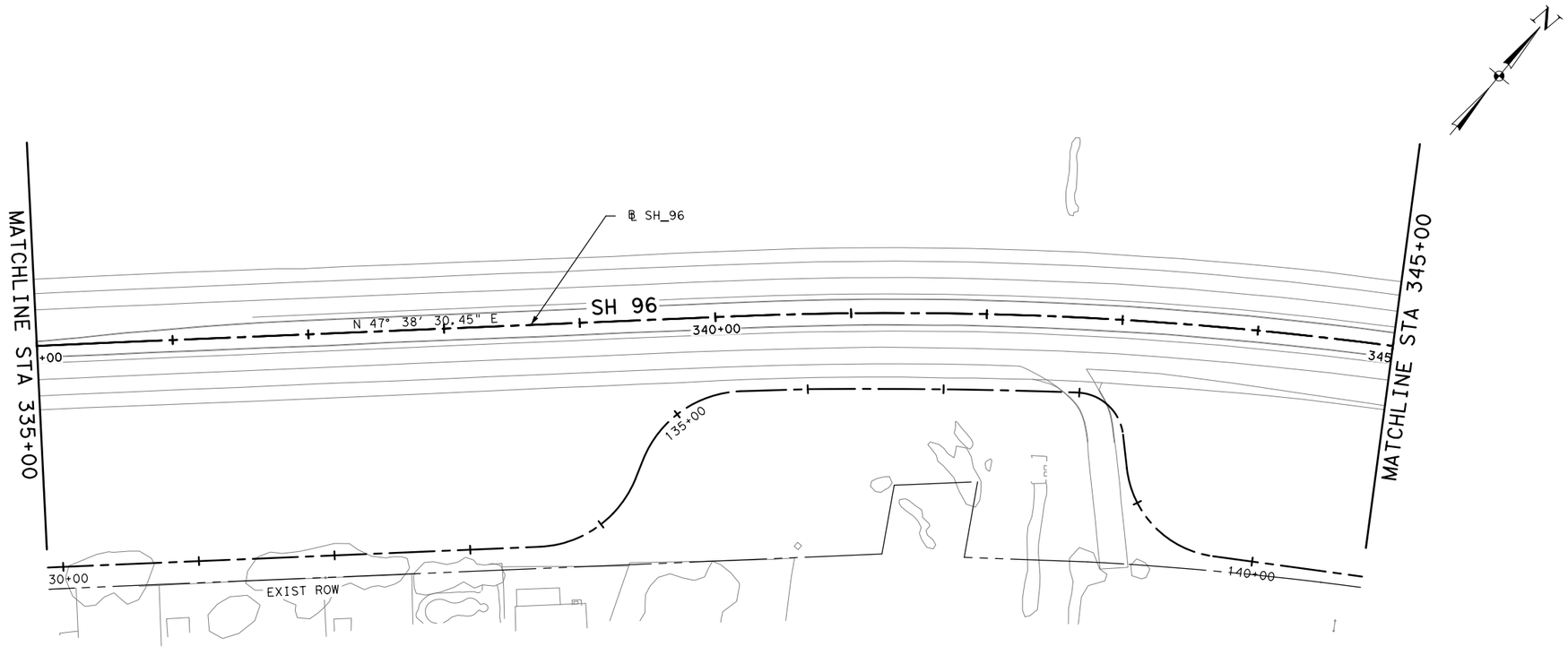

LEGEND:

- EXISTING ROW
- (A) REMOVE CONC (SIDEWALK OR RAMP)
- (B) REMOVE CONC (DRVWY)
- (C) REMOVE STAB BASE AND ASPHALT PAV (13"-18")
- (D) REMOVE CONC (CURB)
- (E) REMOVE CONC (MEDIANS)
- (F) REMOVE STR (BOX CULVERT)
- (G) REMOVE STR (SET)
- (H) REMOVE STR (HEADWALL)
- (I) REMOVE STR (PIPE)
- (J) REMOVE STR (DRIVEWAY CULVERT)

NO.	DATE	REVISION	APPROVED

STATE OF TEXAS
JOHANNA TORRES
130063
LICENSED PROFESSIONAL ENGINEER
johannatorres
8/1/2023

Texas Department of Transportation
©2023

JONES|CARTER
Texas Board of Professional Engineers Registration No. F-23290
4350 Lockhill Selma Rd, Suite 100• San Antonio, Texas 78249 • 210.494.5511

SH 96, FM 270
REMOVAL LAYOUT

SH 96 STA 325+00 TO SH 96 STA 345+00

SHEET 12 OF 16

DRAWN	FED.RD. DIV.NO.	FEDERAL AID PROJECT NO.		HIGHWAY NO.
AA	06			FM 270, ETC
DESIGNED	STATE	DIST.	COUNTY	SHEET NO.
JT	TEXAS	HOUSTON	GALVESTON	115
CHECKED	CONT.	SECT.	JOB	
NG	0912	73	215	
APPROVED				
DD				

PLOTDRIVER: LCBF.pltcfg
PENTABLE: LCBF.tbl
DATE: 8/1/2023 8:40:12 PM USER: sss
FILE: c:\dms\pwe101-01\stela.staver-scull\dms22657\LCBF_REM_13.dgn

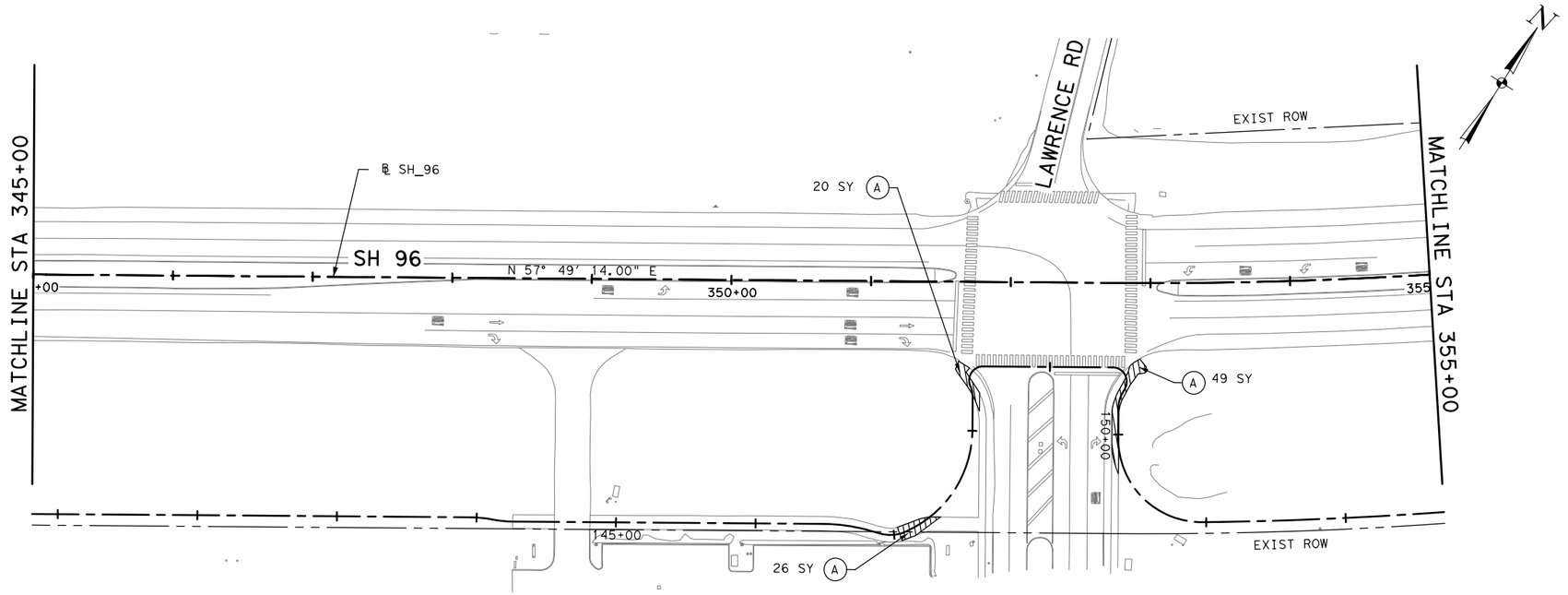

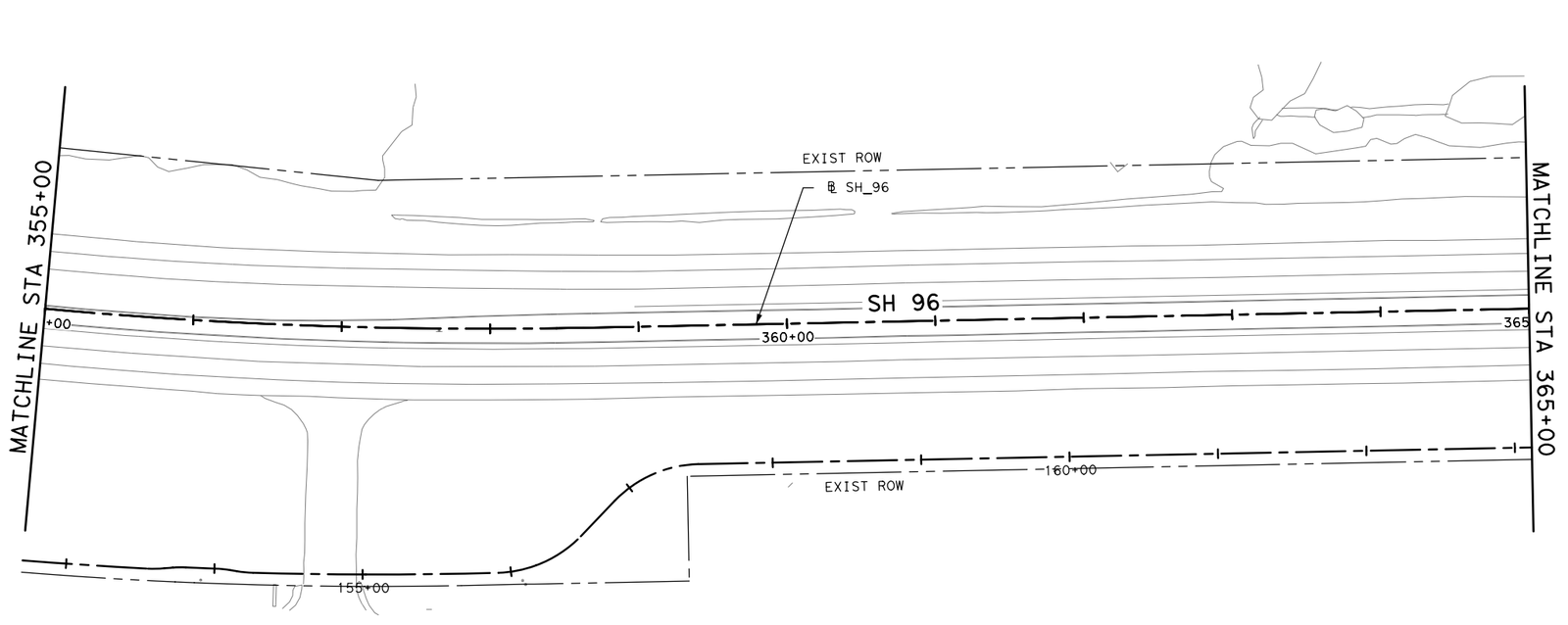

0' 25' 50' 100'

LEGEND:

- EXISTING ROW
- (A) REMOVE CONC (SIDEWALK OR RAMP)
- (B) REMOVE CONC (DRVWY)
- (C) REMOVE STAB BASE AND ASPHALT PAV (13"-18")
- (D) REMOVE CONC (CURB)
- (E) REMOVE CONC (MEDIANS)
- (F) REMOVE STR (BOX CULVERT)
- (G) REMOVE STR (SET)
- (H) REMOVE STR (HEADWALL)
- (I) REMOVE STR (PIPE)
- (J) REMOVE STR (DRIVEWAY CULVERT)

NO.	DATE	REVISION	APPROVED

STATE OF TEXAS
JOHANNA TORRES
130063
LICENSED PROFESSIONAL ENGINEER
johannatorres
8/1/2023

Texas Department of Transportation
©2023

JONES|CARTER
Texas Board of Professional Engineers Registration No. F-23290
4350 Lockhill Selma Rd, Suite 100• San Antonio, Texas 78249 • 210.494.5511

SH 96, FM 270
REMOVAL LAYOUT

SH 96 STA 345+00 TO SH 96 STA 365+00

SHEET 13 OF 16

DRAWN	FED.RD. DIV.NO.	FEDERAL AID PROJECT NO.		HIGHWAY NO.
AA	06			FM 270, ETC
DESIGNED	STATE	DIST.	COUNTY	SHEET NO.
JT	TEXAS	HOUSTON	GALVESTON	116
CHECKED	CONT.	SECT.	JOB	
NG	0912	73	215	
APPROVED				
DD				

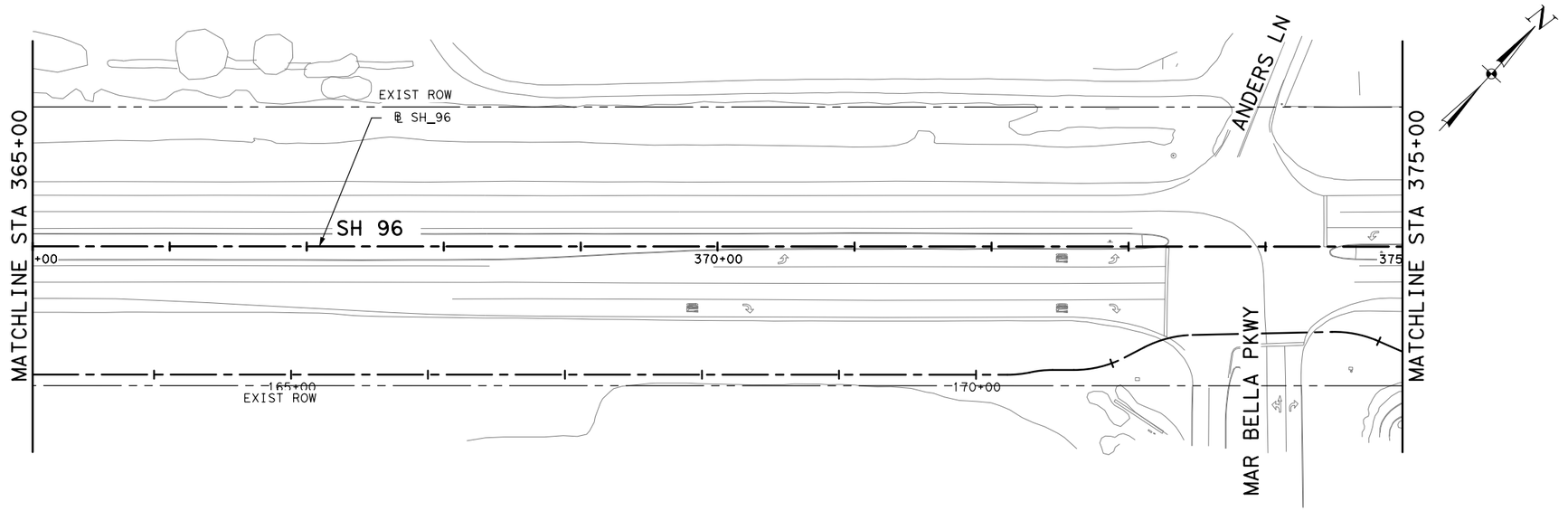

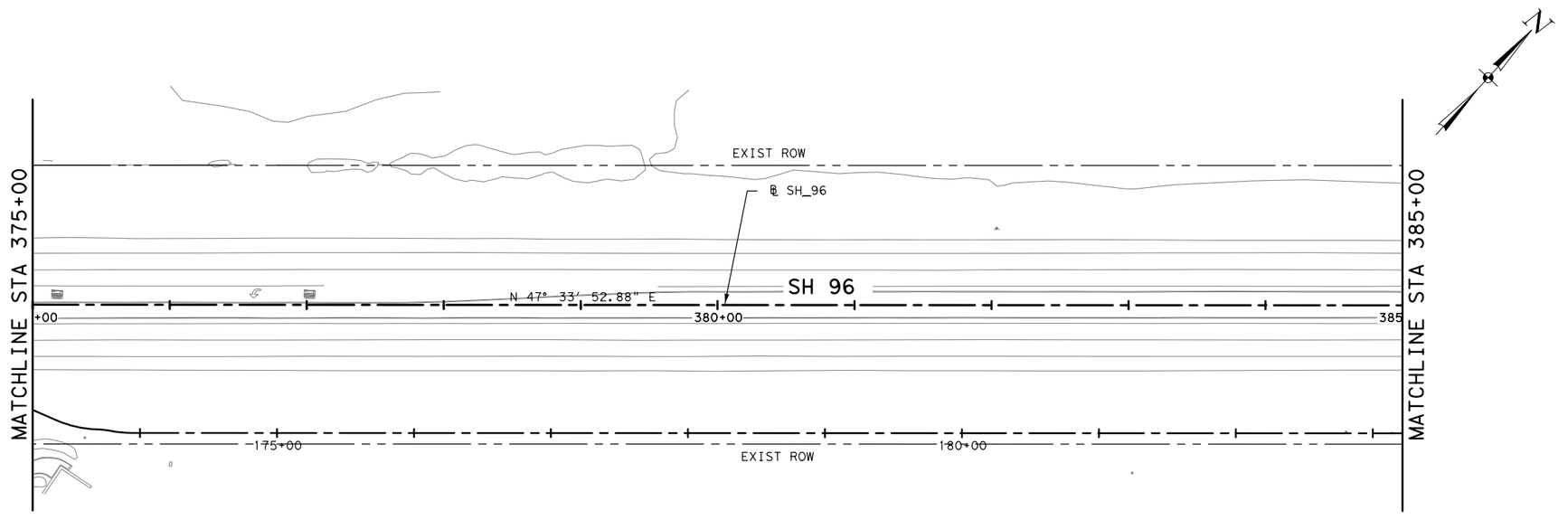

0' 25' 50' 100'

LEGEND:

- EXISTING ROW
- (A) REMOVE CONC (SIDEWALK OR RAMP)
- (B) REMOVE CONC (DRVWY)
- (C) REMOVE STAB BASE AND ASPHALT PAV (13"-18")
- (D) REMOVE CONC (CURB)
- (E) REMOVE CONC (MEDIANS)
- (F) REMOVE STR (BOX CULVERT)
- (G) REMOVE STR (SET)
- (H) REMOVE STR (HEADWALL)
- (I) REMOVE STR (PIPE)
- (J) REMOVE STR (DRIVEWAY CULVERT)

NO.	DATE	REVISION	APPROVED

STATE OF TEXAS
JOHANNA TORRES
130063
LICENSED
PROFESSIONAL ENGINEER
johannatorres
8/1/2023

Texas Department of Transportation
©2023

JONES|CARTER
Texas Board of Professional Engineers Registration No. F-23290
4350 Lockhill Selma Rd, Suite 100• San Antonio, Texas 78249 •210.494.5511

SH 96, FM 270
REMOVAL LAYOUT

SH 96 STA 365+00 TO SH 96 STA 385+00

SHEET 14 OF 16

DRAWN	FED.RD. DIV.NO.	FEDERAL AID PROJECT NO.		HIGHWAY NO.
AA	06			FM 270, ETC
DESIGNED	STATE	DIST.	COUNTY	SHEET NO.
JT	TEXAS	HOUSTON	GALVESTON	117
CHECKED	CONT.	SECT.	JOB	
NG	0912	73	215	
APPROVED				
DD				

PENTABLE:LCBF.tbl
PLOTDRIVER:LCBF.pltcfg
DATE:8/1/2023 8:40:14 PM USER:sss
FILE:c:\bms\pwe101-01\stela.staver-scull\dms22657\LCBF_REM_14.dgn

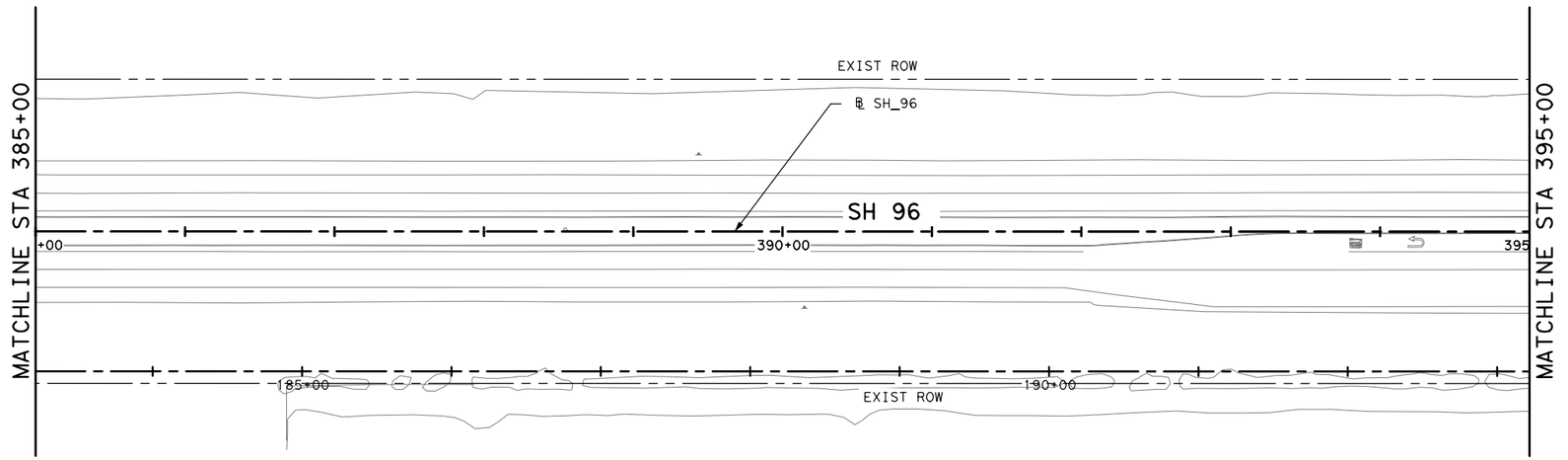

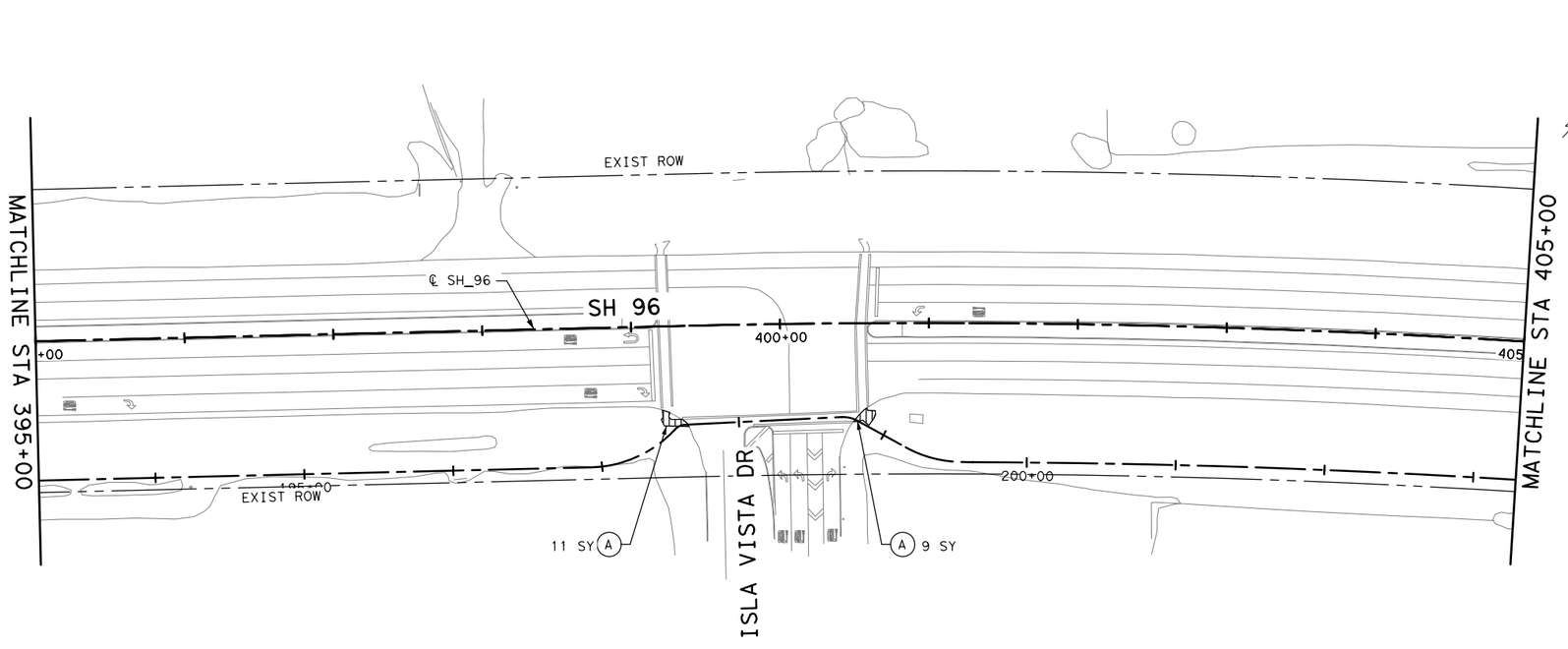

0' 25' 50' 100'

LEGEND:

- EXISTING ROW
- (A) REMOVE CONC (SIDEWALK OR RAMP)
- (B) REMOVE CONC (DRVWY)
- (C) REMOVE STAB BASE AND ASPHALT PAV (13"-18")
- (D) REMOVE CONC (CURB)
- (E) REMOVE CONC (MEDIANS)
- (F) REMOVE STR (BOX CULVERT)
- (G) REMOVE STR (SET)
- (H) REMOVE STR (HEADWALL)
- (I) REMOVE STR (PIPE)
- (J) REMOVE STR (DRIVEWAY CULVERT)

NO.	DATE	REVISION	APPROVED

STATE OF TEXAS
JOHANNA TORRES
130063
LICENSED
PROFESSIONAL ENGINEER
johannatorres
8/1/2023

Texas Department of Transportation
©2023

JONES|CARTER
Texas Board of Professional Engineers Registration No. F-23290
4350 Lockhill Selma Rd, Suite 100• San Antonio, Texas 78249 •210.494.5511

SH 96, FM 270
REMOVAL LAYOUT

SH 96 STA 385+00 TO SH 96 STA 405+00

SHEET 15 OF 16

DRAWN	FED.RD. DIV.NO.	FEDERAL AID PROJECT NO.		HIGHWAY NO.
AA	06			FM 270, ETC
DESIGNED	STATE	DIST.	COUNTY	SHEET NO.
JT	TEXAS	HOUSTON	GALVESTON	118
CHECKED	CONT.	SECT.	JOB	
NG	0912	73	215	
APPROVED				
DD				

PENTABLE:LCBF.tbl
PLOTDRIVER:LCBF.pltcfg
DATE:8/1/2023 8:40:17 PM USER:sss
FILE:c:\bms\pwe101-01\stela.staver-scul1\dms22657\LCBF_REM_15.dgn

PLOTDRIVER: LCBF.pltcfg
PENTABLE: LCBF.tbl
DATE: 8/1/2023 8:40:19 PM USER: sss
FILE: c:\bms\pwe101-01\stela.staver-scull\dms22657\LCBF_REM_16.dgn

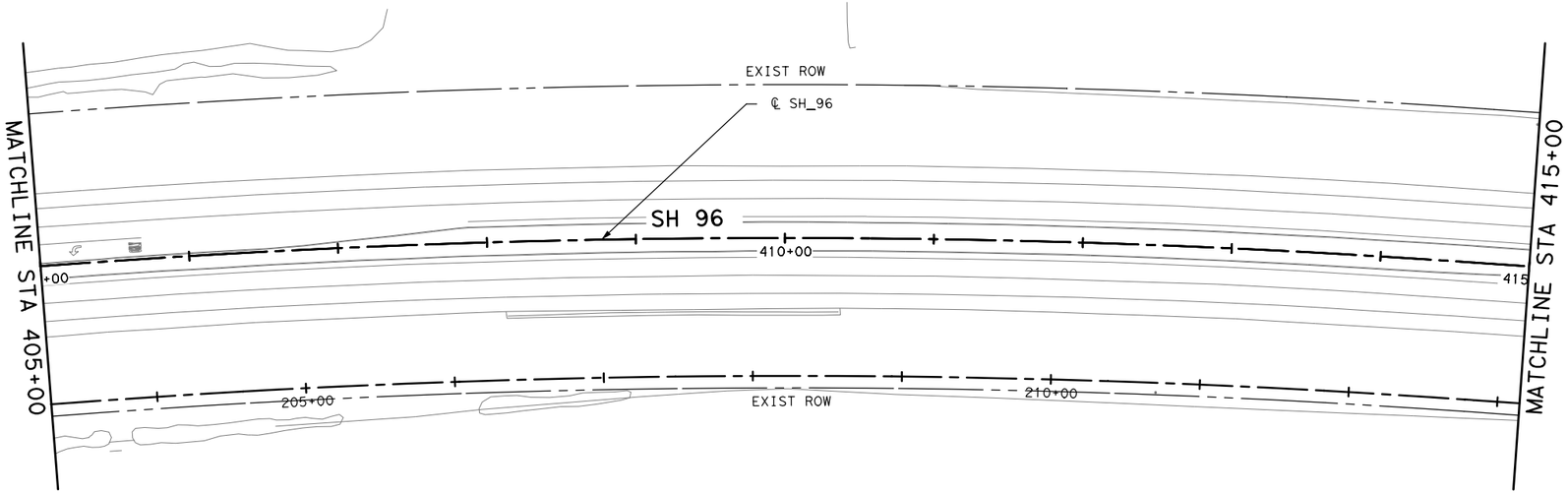

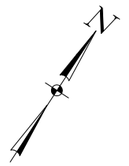

0′ 25′ 50′ 100′

LEGEND:

- EXISTING ROW
- (A) REMOVE CONC (SIDEWALK OR RAMP)
- (B) REMOVE CONC (DRVWY)
- (C) REMOVE STAB BASE AND ASPHALT PAV (13"-18")
- (D) REMOVE CONC (CURB)
- (E) REMOVE CONC (MEDIANS)
- (F) REMOVE STR (BOX CULVERT)
- (G) REMOVE STR (SET)
- (H) REMOVE STR (HEADWALL)
- (I) REMOVE STR (PIPE)
- (J) REMOVE STR (DRIVEWAY CULVERT)

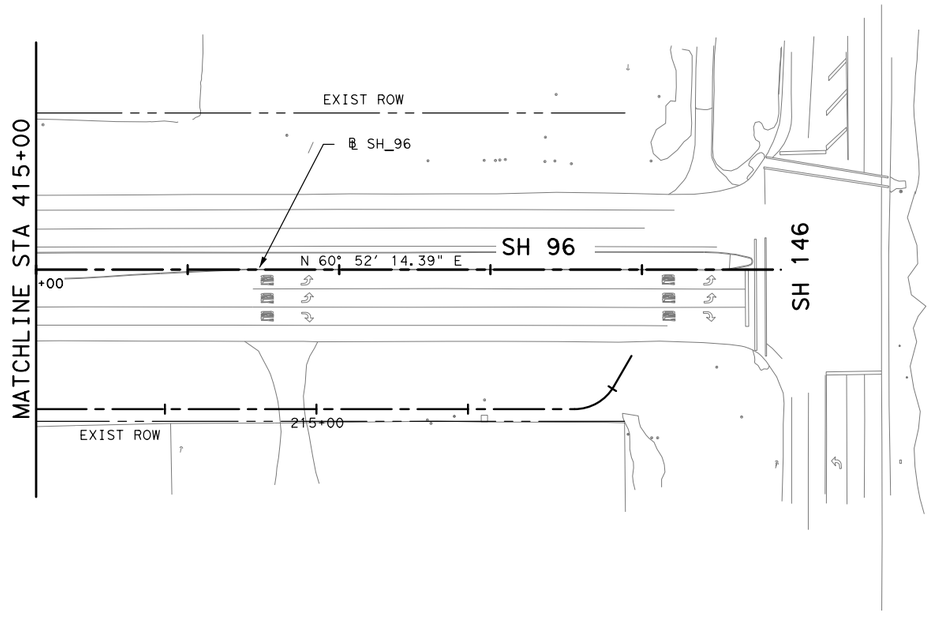

NO.	DATE	REVISION	APPROVED

STATE OF TEXAS
JOHANNA TORRES
130063
LICENSED
PROFESSIONAL ENGINEER
johannatorres
8/1/2023

Texas Department of Transportation
©2023

JONES|CARTER
Texas Board of Professional Engineers Registration No. F-23290
4350 Lockhill Selma Rd, Suite 100• San Antonio, Texas 78249•210.494.5511

SH 96, FM 207
REMOVAL LAYOUT

SH 96 STA 405+00 TO END PROJECT

SHEET 16 OF 16

DRAWN	FED.RD. DIV.NO.	FEDERAL AID PROJECT NO.		HIGHWAY NO.
AA	06			FM 270, ETC
DESIGNED	STATE	DIST.	COUNTY	SHEET NO.
JT	TEXAS	HOUSTON	GALVESTON	119
CHECKED	CONT.	SECT.	JOB	
NG	0912	73	215	
APPROVED				
DD				

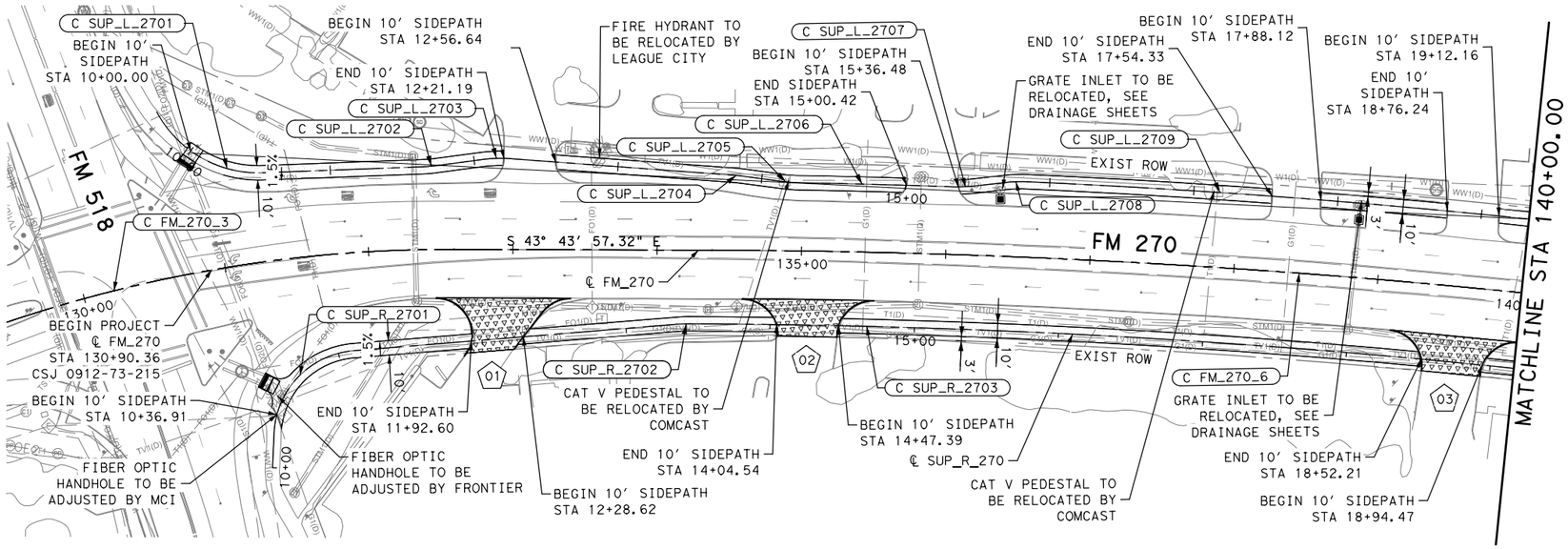

0' 25' 50' 100'

LEGEND:

- EXISTING DIRECTION OF TRAVEL
- DIRECTION OF TRAVEL
- EXISTING ROW
- SAWCUT LINE
- PROPOSED PEDESTRIAN HANDRAIL
- PROPOSED SIDEPATH
- PROPOSED WIDENING
- WETLAND
- PROPOSED ASPHALT DRIVEWAY
- PROPOSED CONCRETE DRIVEWAY
- (#) DRIVEWAY NUMBER
- (C_XXX_XXX) CURVE NUMBER

NOTE:

1. PLAN VIEW IS BASED ON ROADWAY BASELINE. PROFILE VIEW IS BASED ON SIDEPATH CENTERLINE.
2. REFER TO INTERSECTION LAYOUT FOR RAMP DETAILS.

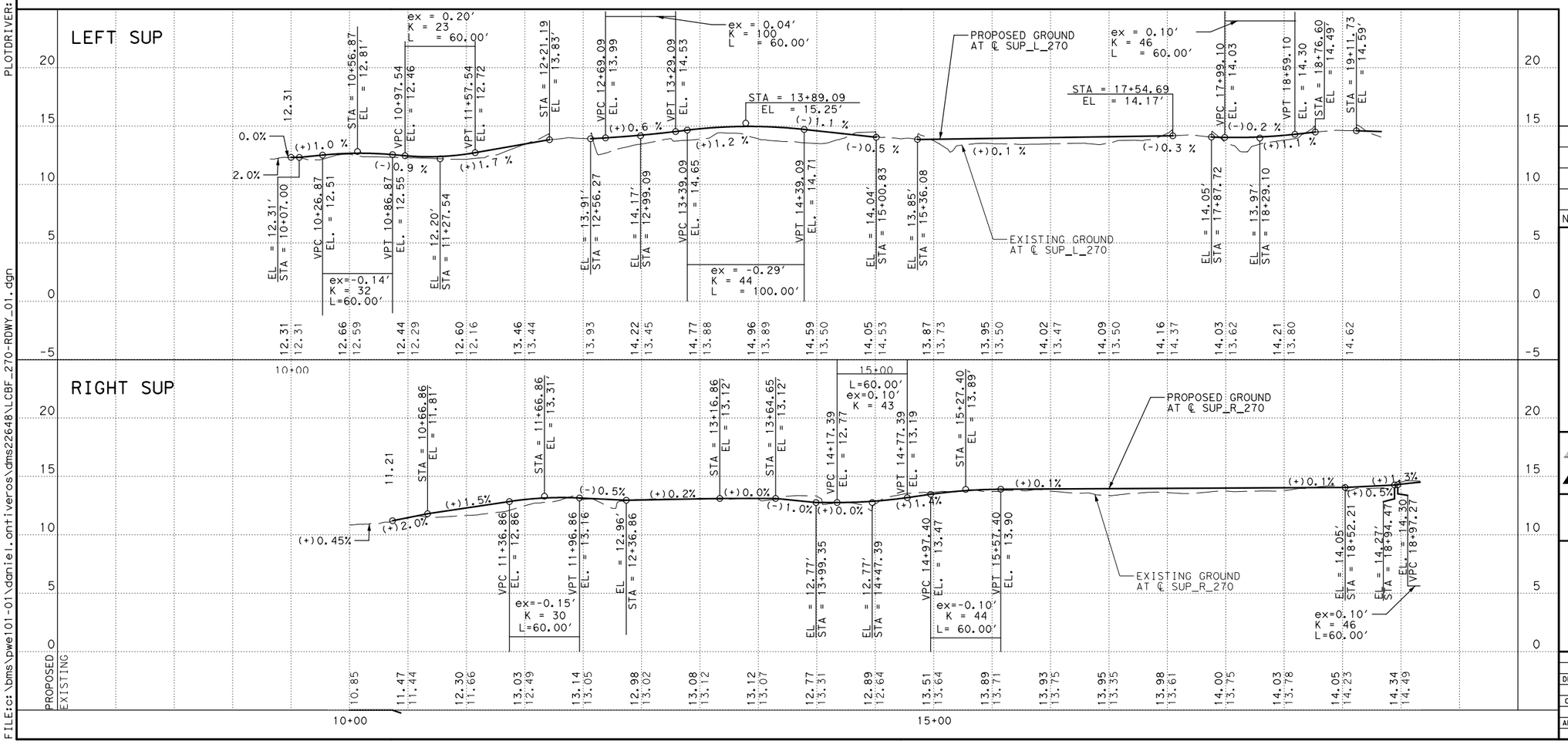

NO.	DATE	REVISION	APPROVED

STATE OF TEXAS
JOHANNA TORRES
130063
LICENSED PROFESSIONAL ENGINEER
johannatorres
8/2/2023

Texas Department of Transportation ©2023

JONES|CARTER
Texas Board of Professional Engineers Registration No. F-23290
4350 Lockhill Selma Rd, Suite 100 • San Antonio, Texas 78249 • 210.494.5511

SH 96, FM 270
FM 270
PLAN AND PROFILE
BEGIN TO STA 140+00

SHEET **01** OF **29**

DRAWN	FED. RD. DIV. NO.	FEDERAL AID PROJECT NO.		HIGHWAY NO.
AA	06			FM 270, ETC
DESIGNED	STATE	DIST.	COUNTY	SHEET NO.
JT	TEXAS	HOUSTON	GALVESTON	120
CHECKED	CONT.	SECT.	JOB	
NG	0912	73	215	
APPROVED				
DD				

PENTABLE: LCBF.tbl
PLOTDRIVER: LCBF.pltcfg
DATE: 8/2/2023 2:54:28 AM USER: do
FILE: c:\bms\pwe101-01\daniel.antiveros\dms22648\LCBF_270-RDWY_01.dgn

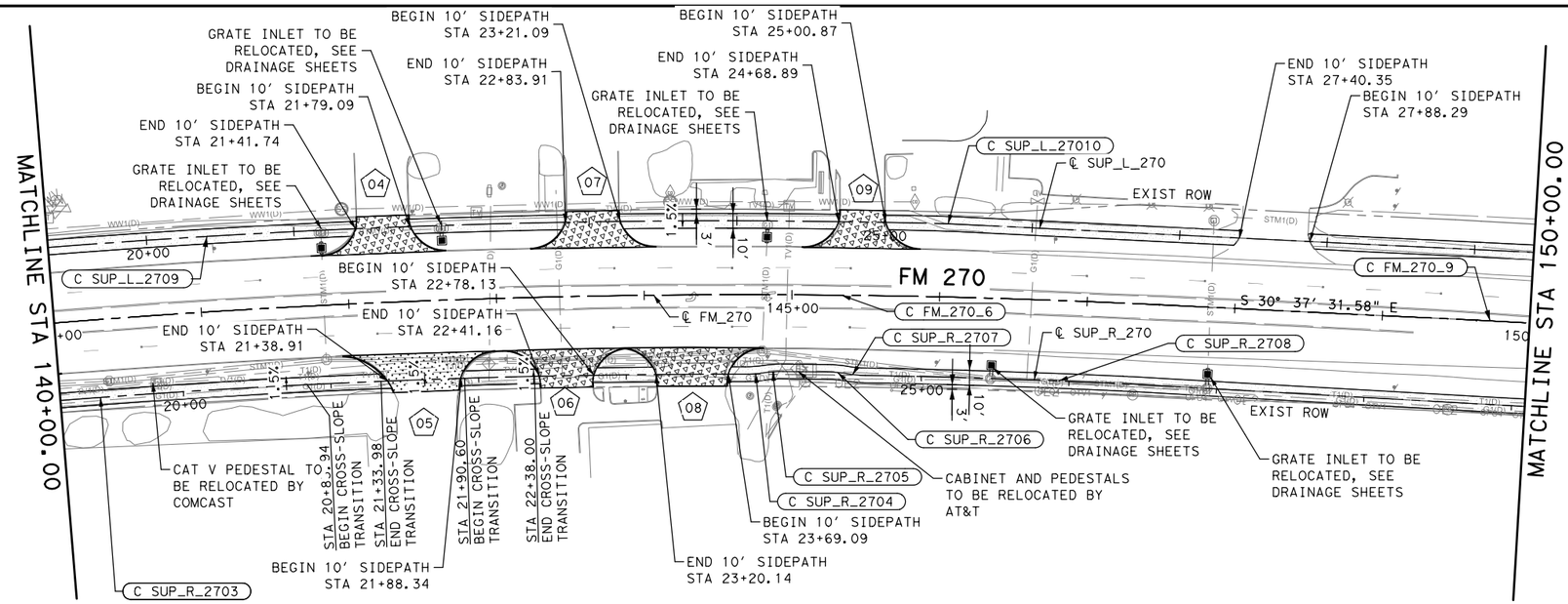

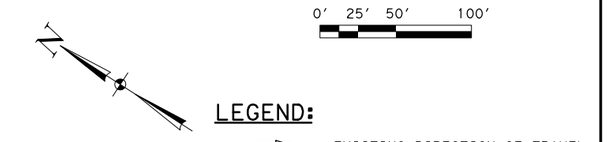

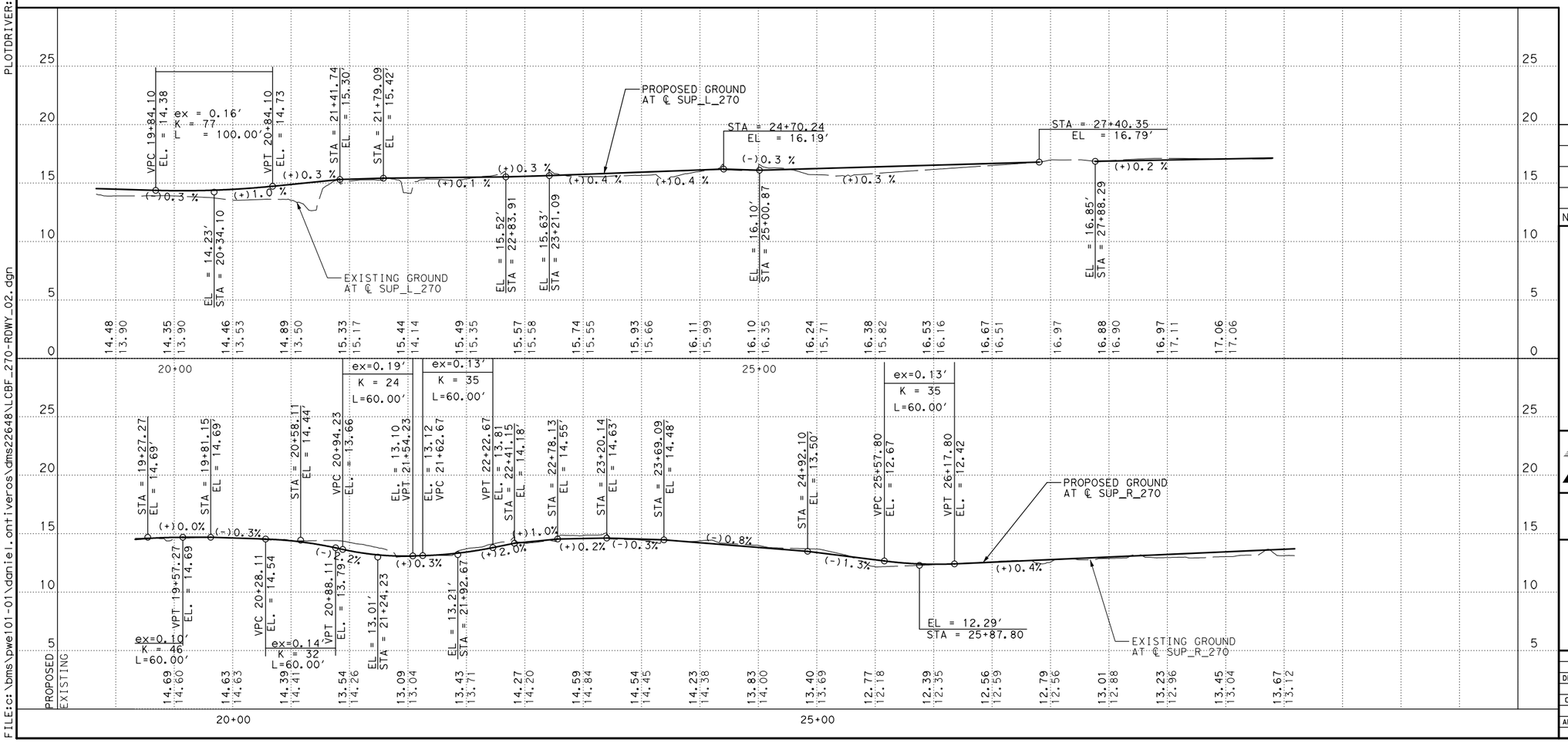

NO.	DATE	REVISION	APPROVED

STATE OF TEXAS
JOHANNA TORRES
130063
LICENSED
PROFESSIONAL ENGINEER
johannatorres
8/2/2023

Texas Department of Transportation
©2023

JONES|CARTER
Texas Board of Professional Engineers Registration No. F-23290
4350 Lockhill Selma Rd, Suite 100 • San Antonio, Texas 78249 • 210.494.5511

SH 96, FM 270
FM 270
PLAN AND PROFILE
STA 140+00 TO STA 150+00

SHEET **02** OF **29**

DRAWN	FED.RD. DIV.NO.	FEDERAL AID PROJECT NO.		HIGHWAY NO.
AA	06			FM 270, ETC
DESIGNED	STATE	DIST.	COUNTY	SHEET NO.
JT	TEXAS	HOUSTON	GALVESTON	121
CHECKED	CONT.	SECT.	JOB	
NG	0912	73	215	
APPROVED				
DD				

PLOTDRIVER: LCBF.pltcfg
PENTABLE: LCBF.tbl
USER: do
2:54:30 AM
DATE: 8/2/2023
FILE: c:\bms\pwe101-01\daniel.ontiveros\dms22648\LCBF_270-RDWY_02.dgn

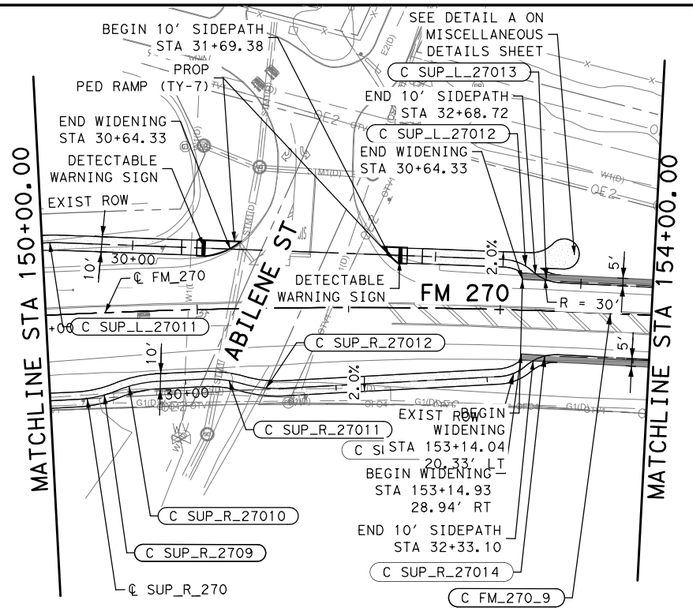

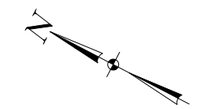

0' 25' 50' 100'

LEGEND:

- EXISTING DIRECTION OF TRAVEL
- DIRECTION OF TRAVEL
- EXISTING ROW
- SAWCUT LINE
- PROPOSED PEDESTRIAN HANDRAIL
- PROPOSED SIDEPATH
- PROPOSED WIDENING
- WETLAND
- PROPOSED ASPHALT DRIVEWAY
- PROPOSED CONCRETE DRIVEWAY
- # DRIVEWAY NUMBER
- C_XXX_XXX CURVE NUMBER

NOTE:

1. PLAN VIEW IS BASED ON ROADWAY BASELINE. PROFILE VIEW IS BASED ON SIDEPATH CENTERLINE.
2. REFER TO INTERSECTION LAYOUT FOR RAMP DETAILS.

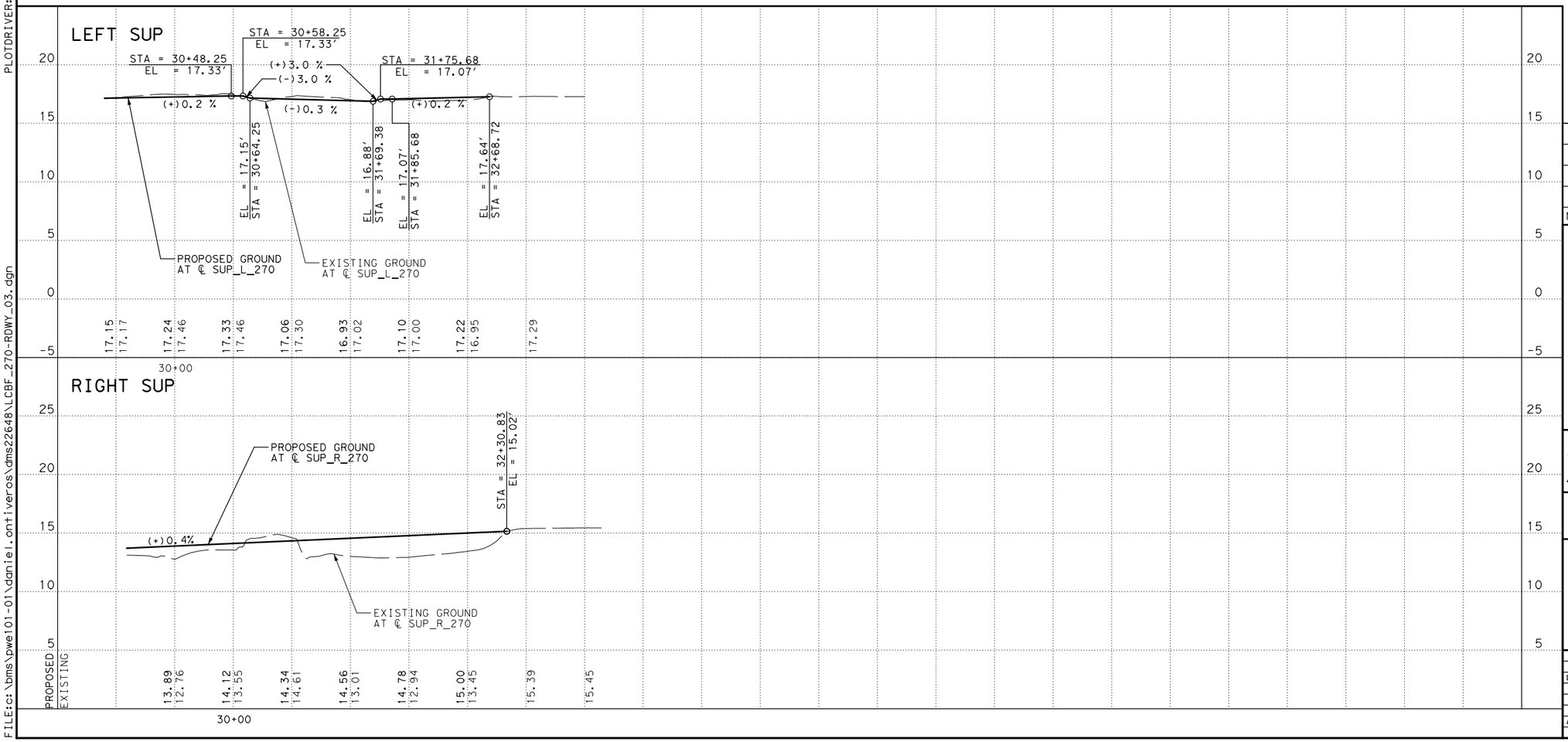

NO.	DATE	REVISION	APPROVED

STATE OF TEXAS
JOHANNA TORRES
130063
LICENSED
PROFESSIONAL ENGINEER
johannatorres
8/2/2023

Texas Department of Transportation
©2023

JONES|CARTER
Texas Board of Professional Engineers Registration No. F-23290
4350 Lockhill Selma Rd, Suite 100• San Antonio, Texas 78249 •210.494.5511

SH 96, FM 270
FM 270
PLAN AND PROFILE
STA 150+00 TO STA 154+00

SHEET **03** OF **29**

DRAWN	FED.RD. DIV.NO.	FEDERAL AID PROJECT NO.		HIGHWAY NO.
AA	06			FM 270, ETC
DESIGNED	STATE	DIST.	COUNTY	SHEET NO.
JT	TEXAS	HOUSTON	GALVESTON	122
CHECKED	CONT.	SECT.	JOB	
NG	0912	73	215	
APPROVED				
DD				

PENTABLE: LCBF.tbl
PLOTDRIVER: LCBF.pltcfg
USER: do
2:54:32 AM
DATE: 8/2/2023
FILE: c:\bms\pwe101-01\daniel.ontiveros\dms22648\LCBF_270-RDWY_03.dgn

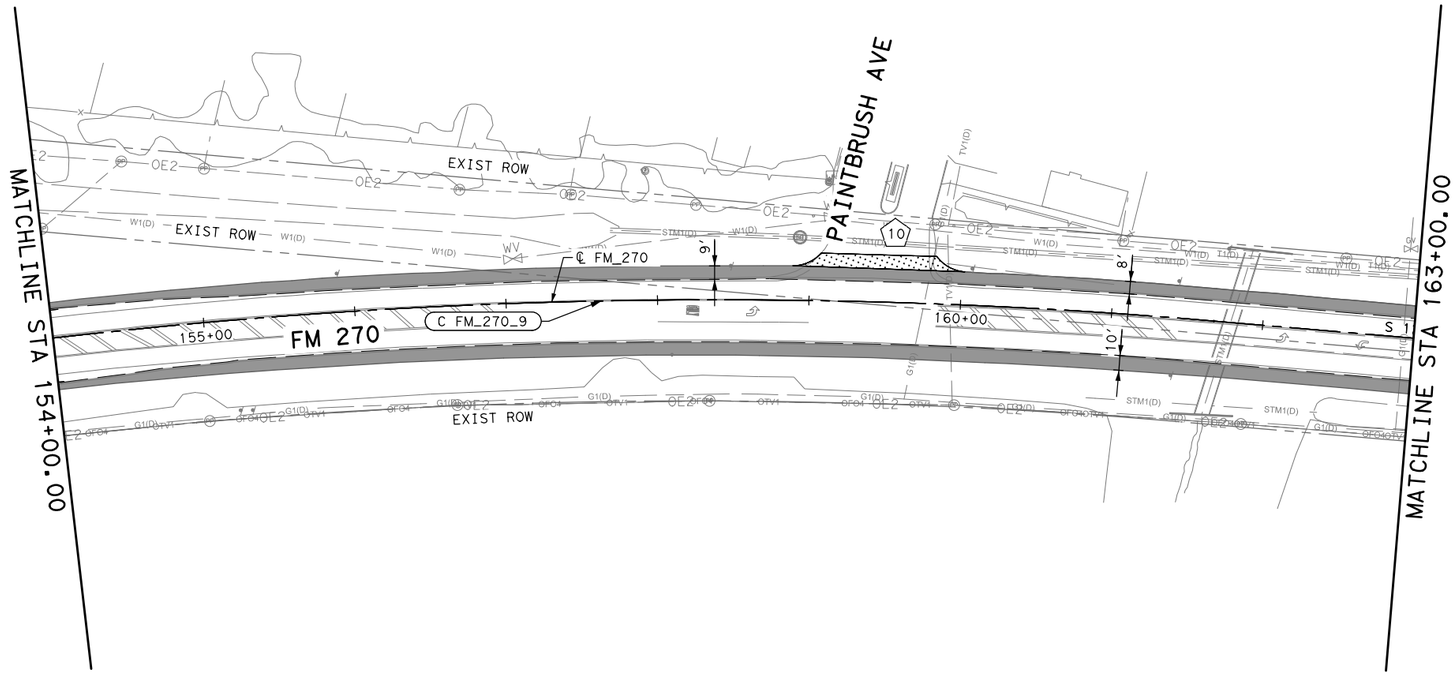

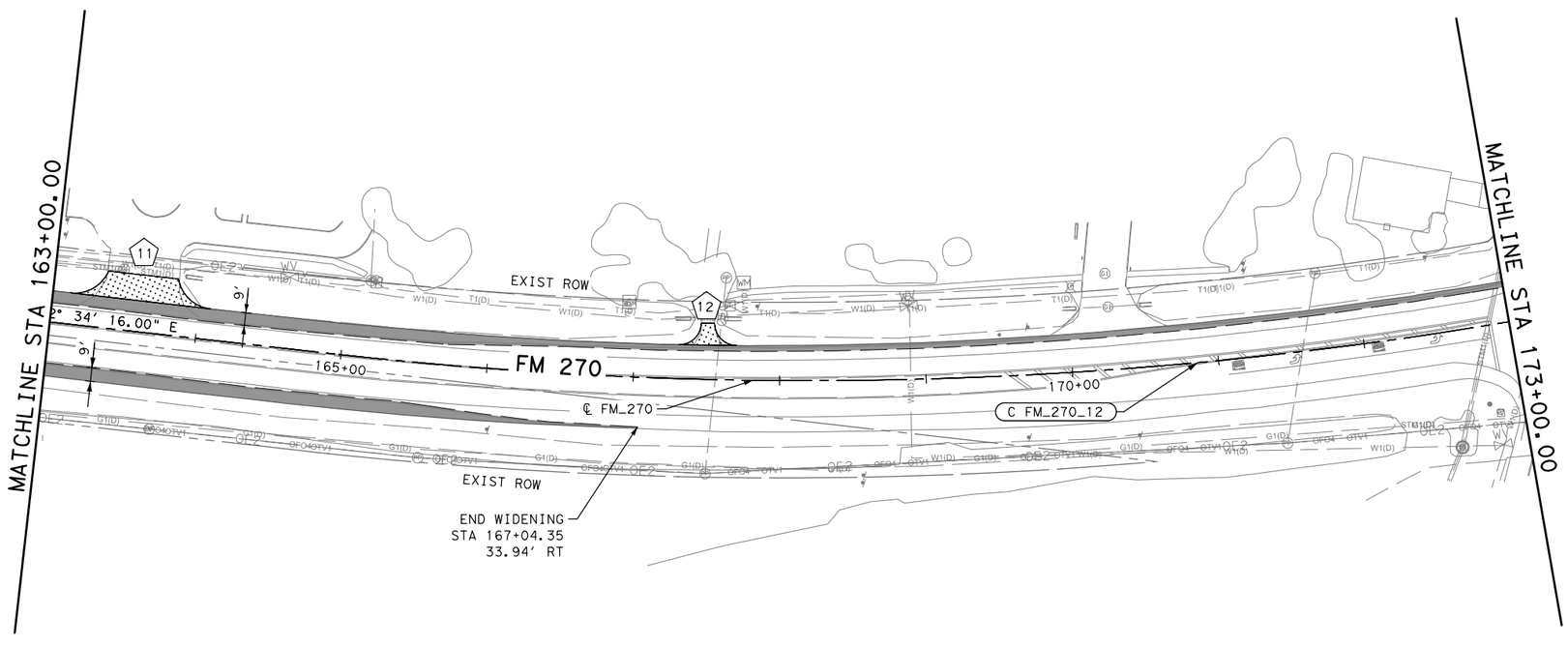

0′ 25′ 50′ 100′

LEGEND:

- EXISTING DIRECTION OF TRAVEL
- DIRECTION OF TRAVEL
- EXISTING ROW
- SAWCUT LINE
- PROPOSED PEDESTRIAN HANDRAIL
- PROPOSED SIDEPATH
- PROPOSED WIDENING
- WETLAND
- PROPOSED ASPHALT DRIVEWAY
- PROPOSED CONCRETE DRIVEWAY
- DRIVEWAY NUMBER
- C_XXX_XXX — CURVE NUMBER

NO.	DATE	REVISION	APPROVED

STATE OF TEXAS
JOHANNA TORRES
130063
LICENSED
PROFESSIONAL ENGINEER
johannatorres
8/2/2023

Texas Department of Transportation
©2023

JONES|CARTER
Texas Board of Professional Engineers Registration No. F-23290
4350 Lockhill Selma Rd, Suite 100• San Antonio, Texas 78249 •210.494.5511

SH 96, FM 270
FM 270
PLAN AND PLAN
STA 154+00 TO STA 173+00

SHEET **04** OF **29**

DRAWN	FED.RD. DIV.NO.	FEDERAL AID PROJECT NO.		HIGHWAY NO.
AA	06			FM 270, ETC
DESIGNED	STATE	DIST.	COUNTY	SHEET NO.
JT	TEXAS	HOUSTON	GALVESTON	123
CHECKED	CONT.	SECT.	JOB	
NG	0912	73	215	
APPROVED				
DD				

PLOTDRIVER: LCBF.pltcfg
PENTABLE: LCBF.tbl
DATE: 8/2/2023 2:54:34 AM USER: do
FILE: c:\bms\pwe101-01\daniel.ontiveros\dms22648\LCBF_270-RDWY_04.dgn

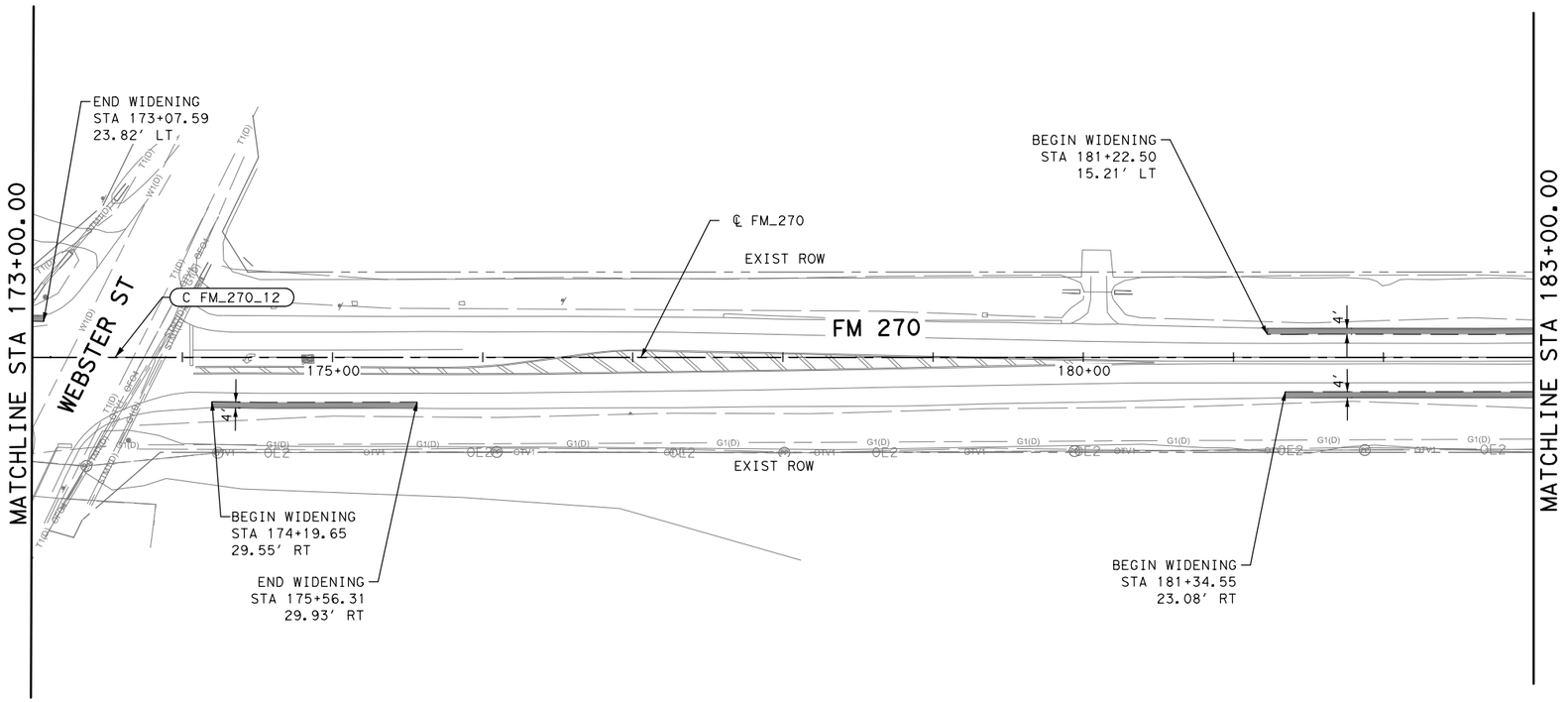

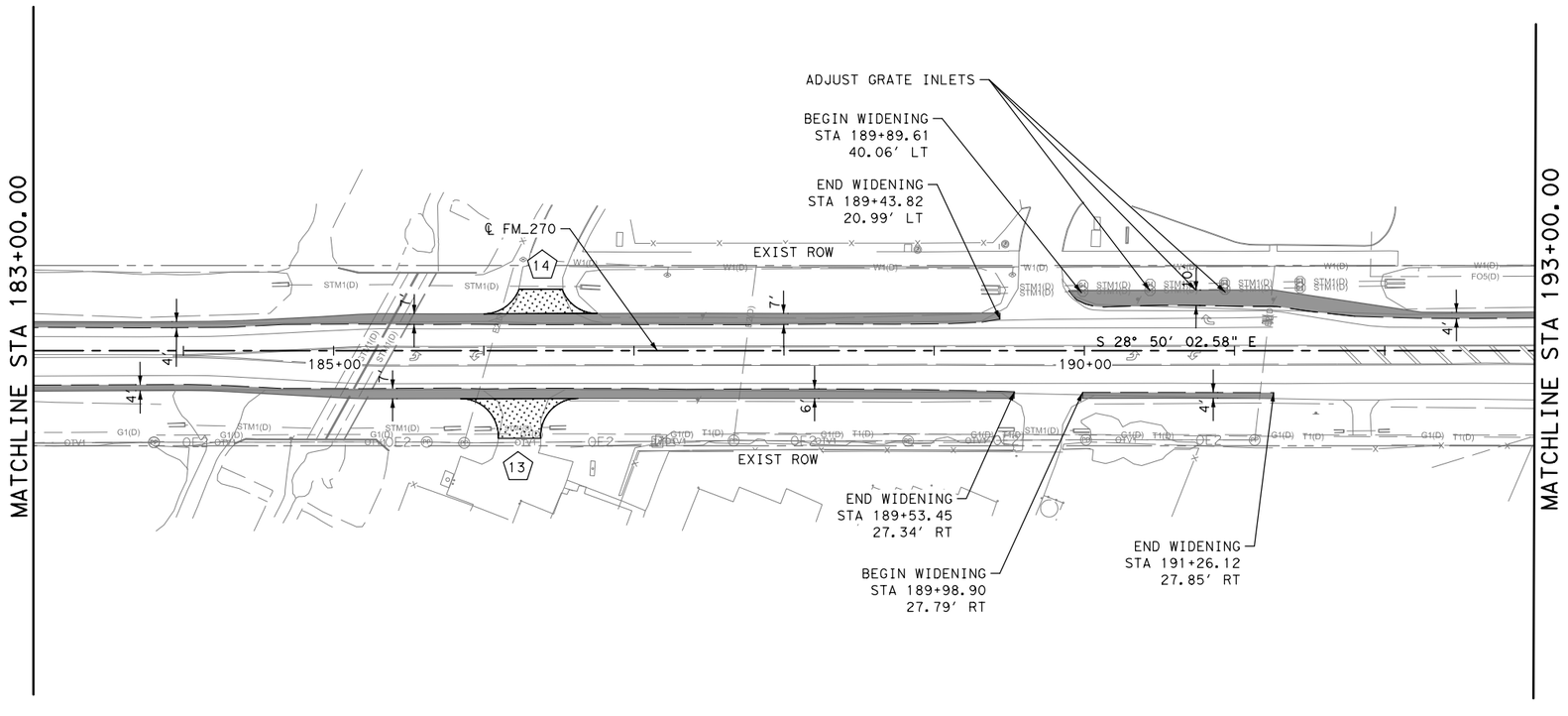

0' 25' 50' 100'

LEGEND:

- EXISTING DIRECTION OF TRAVEL
- DIRECTION OF TRAVEL
- EXISTING ROW
- SAWCUT LINE
- PROPOSED PEDESTRIAN HANDRAIL
- PROPOSED SIDEPATH
- PROPOSED WIDENING
- WETLAND
- PROPOSED ASPHALT DRIVEWAY
- PROPOSED CONCRETE DRIVEWAY
- # DRIVEWAY NUMBER
- C_XXX_XXX CURVE NUMBER

NO.	DATE	REVISION	APPROVED

STATE OF TEXAS
JOHANNA TORRES
130063
LICENSED PROFESSIONAL ENGINEER
johannatorres
8/2/2023

Texas Department of Transportation
©2023

JONES|CARTER
Texas Board of Professional Engineers Registration No. F-23290
4350 Lockhill Selma Rd, Suite 100• San Antonio, Texas 78249 •210.494.5511

SH 96, FM 270
FM 270
PLAN AND PLAN
STA 173+00 TO STA 193+00

SHEET **05** OF **29**

DRAWN	FED.RD. DIV.NO.	FEDERAL AID PROJECT NO.		HIGHWAY NO.
AA	06			FM 270, ETC
DESIGNED	STATE	DIST.	COUNTY	SHEET NO.
JT	TEXAS	HOUSTON	GALVESTON	124
CHECKED	CONT.	SECT.	JOB	
NG	0912	73	215	
APPROVED				
DD				

PENTABLE:LCBF.tbl
PLOTDRIVER:LCBF.pltcfg
DATE:8/2/2023 2:54:37 AM USER:do
FILE:c:\bms\pwe101-01\daniel.ontiveros\dms22648\LCBF_270-RDWY_05.dgn

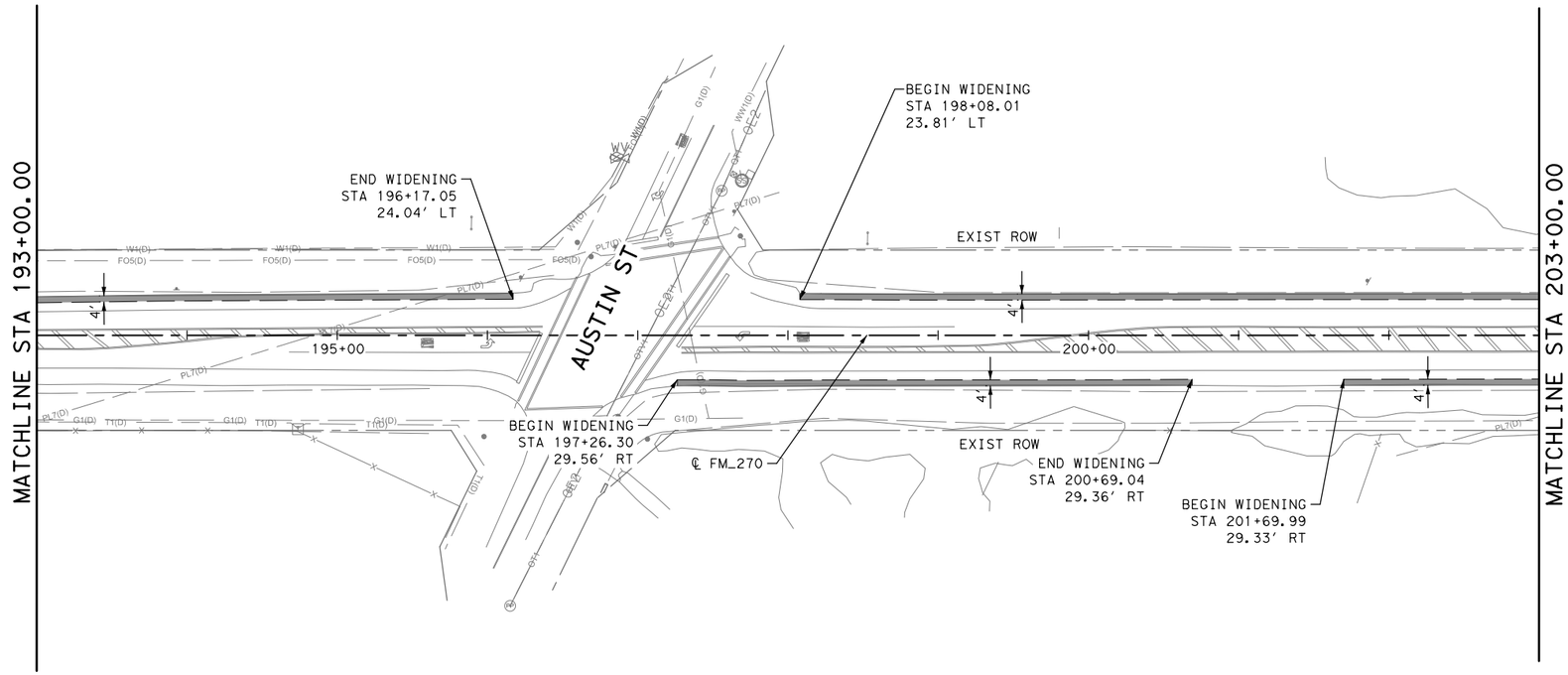

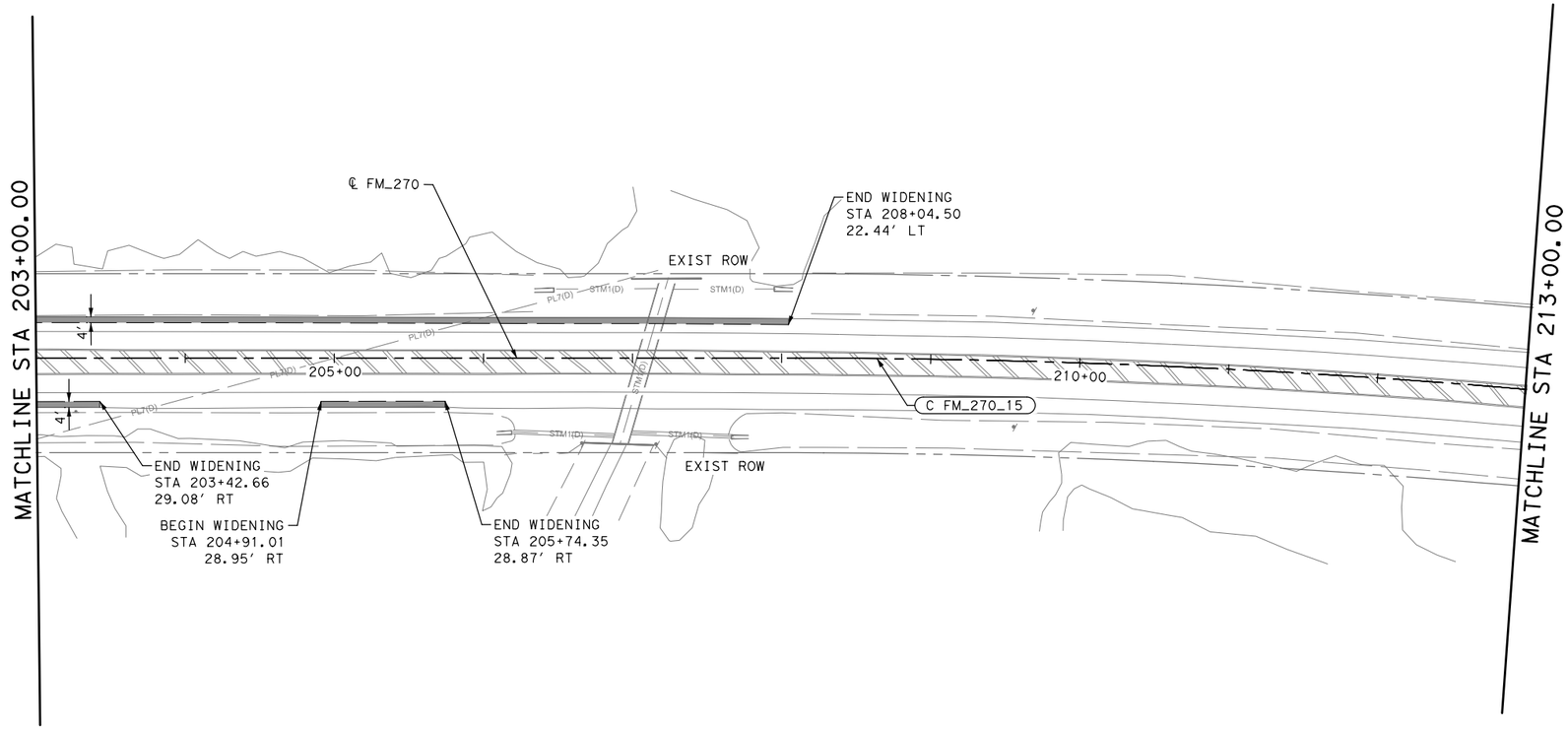

0' 25' 50' 100'

LEGEND:

- EXISTING DIRECTION OF TRAVEL
- DIRECTION OF TRAVEL
- EXISTING ROW
- SAWCUT LINE
- PROPOSED PEDESTRIAN HANDRAIL
- PROPOSED SIDEPATH
- PROPOSED WIDENING
- WETLAND
- PROPOSED ASPHALT DRIVEWAY
- PROPOSED CONCRETE DRIVEWAY
- # DRIVEWAY NUMBER
- C_XXX_XXX CURVE NUMBER

NO.	DATE	REVISION	APPROVED

STATE OF TEXAS
JOHANNA TORRES
130063
LICENSED
PROFESSIONAL ENGINEER
johannatorres
8/2/2023

Texas Department of Transportation
©2023

JONES|CARTER
Texas Board of Professional Engineers Registration No. F-23290
4350 Lockhill Selma Rd, Suite 100• San Antonio, Texas 78249•210.494.5511

SH 96, FM 270
FM 270
PLAN AND PLAN
STA 193+00 TO 213+00

SHEET **06** OF **29**

DRAWN	FED.RD. DIV.NO.	FEDERAL AID PROJECT NO.		HIGHWAY NO.
AA	06			FM 270, ETC
DESIGNED	STATE	DIST.	COUNTY	SHEET NO.
JT	TEXAS	HOUSTON	GALVESTON	125
CHECKED	CONT.	SECT.	JOB	
NG	0912	73	215	
APPROVED				
DD				

PLOTDRIVER: LCBF.pltcfg
PENTABLE: LCBF.tbl
DATE: 8/2/2023 2:54:40 AM USER: do
FILE: c:\bms\pwe101-01\daniel.ontiveros\dms22648\LCBF_270-RDWY_06.dgn

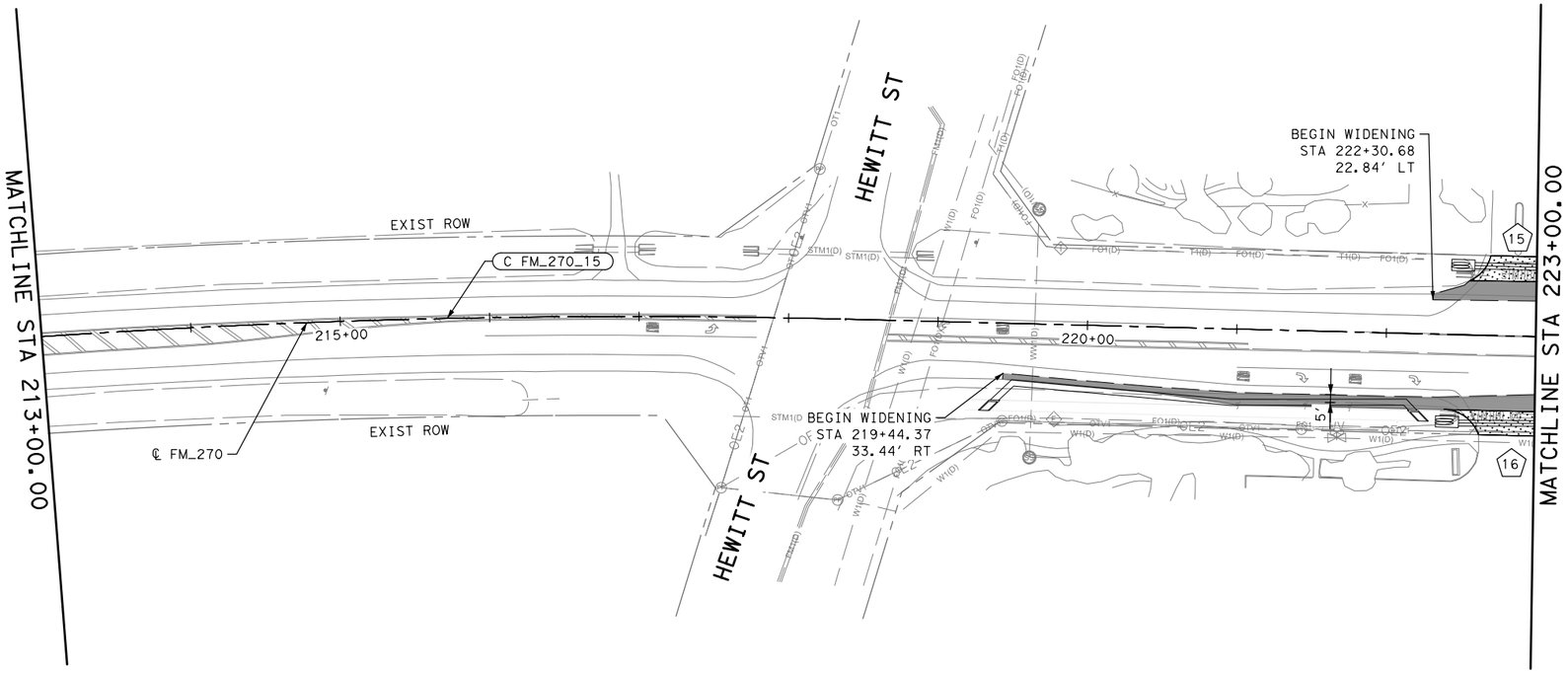

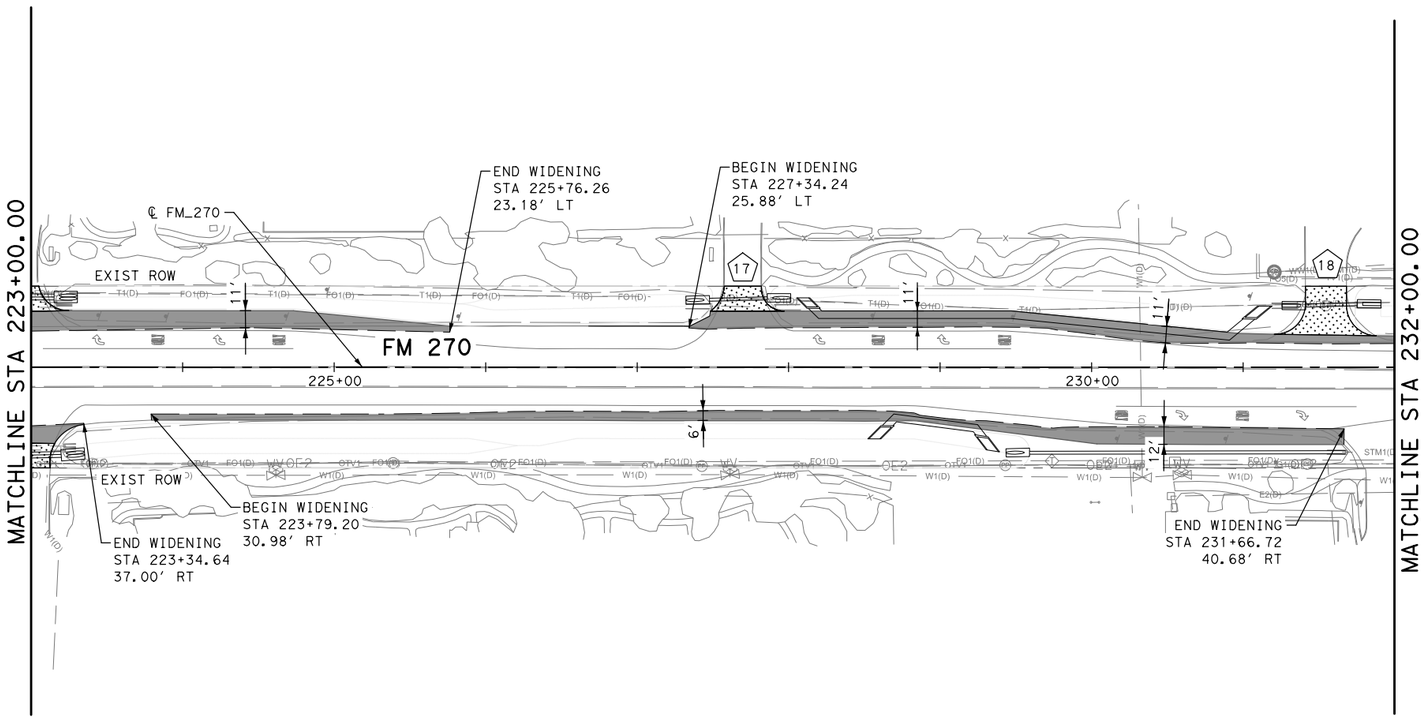

0' 25' 50' 100'

LEGEND:

- EXISTING DIRECTION OF TRAVEL
- DIRECTION OF TRAVEL
- EXISTING ROW
- SAWCUT LINE
- PROPOSED PEDESTRIAN HANDRAIL
- PROPOSED SIDEPATH
- PROPOSED WIDENING
- WETLAND
- PROPOSED ASPHALT DRIVEWAY
- PROPOSED CONCRETE DRIVEWAY
- (#) DRIVEWAY NUMBER
- (C_XXX_XXX) CURVE NUMBER

NO.	DATE	REVISION	APPROVED

JOHANNA TORRES
130063
LICENSED
PROFESSIONAL ENGINEER
STATE OF TEXAS
johannatorres
8/2/2023

Texas Department of Transportation
©2023

JONES|CARTER
Texas Board of Professional Engineers Registration No. F-23290
4350 Lockhill Selma Rd, Suite 100• San Antonio, Texas 78249 •210.494.5511

SH 96, FM 270
FM 270
PLAN AND PLAN
STA 213+00 TO STA 232+00

SHEET **07** OF **29**

DRAWN	FED.RD. DIV.NO.	FEDERAL AID PROJECT NO.		HIGHWAY NO.
AA	06			FM 270, ETC
DESIGNED	STATE	DIST.	COUNTY	SHEET NO.
JT	TEXAS	HOUSTON	GALVESTON	126
CHECKED	CONT.	SECT.	JOB	
NG	0912	73	215	
APPROVED				
DD				

DATE:8/2/2023 2:54:42 AM USER:do
FILE:c:\bms\pwe101-01\daniel.ontiveros\dms22648\LCBF_270-RDWY_07.dgn
PLOTDRIVER: LCBF.pltcfg
PENTABLE: LCBF.tbl

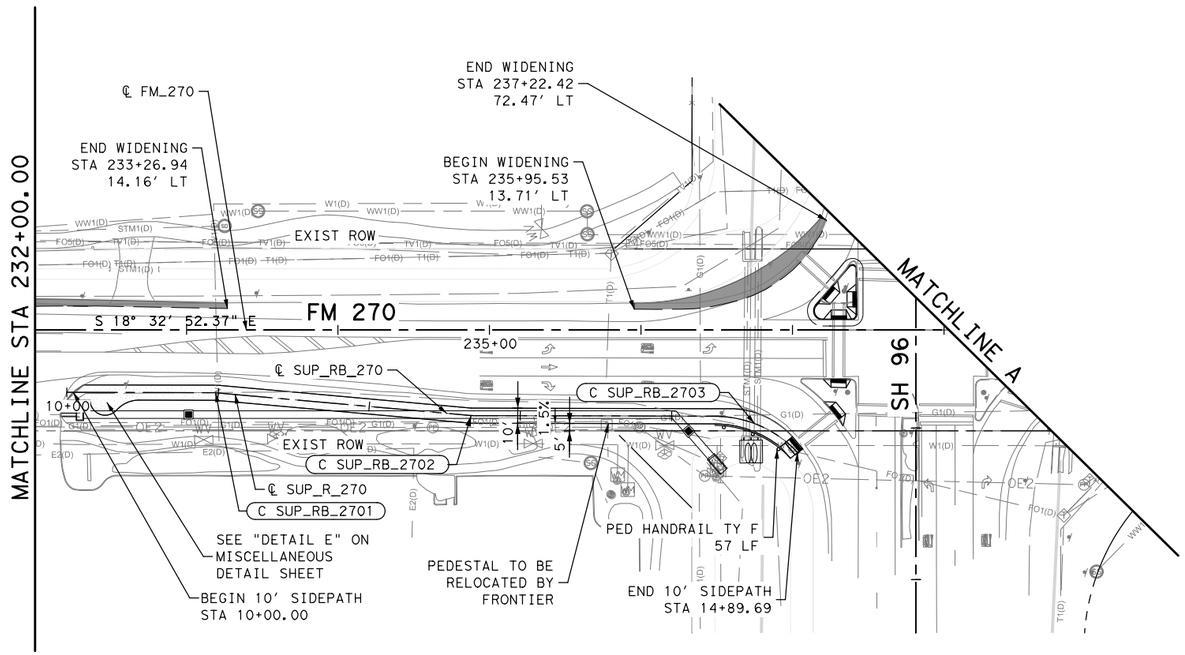

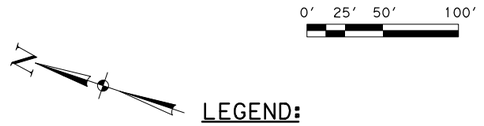

LEGEND:

- EXISTING DIRECTION OF TRAVEL
- DIRECTION OF TRAVEL
- EXISTING ROW
- SAWCUT LINE
- PROPOSED PEDESTRIAN HANDRAIL
- PROPOSED SIDEPATH
- PROPOSED WIDENING
- WETLAND
- PROPOSED ASPHALT DRIVEWAY
- PROPOSED CONCRETE DRIVEWAY
- # DRIVEWAY NUMBER
- C_XXX_XXX CURVE NUMBER

NOTE:

1. PLAN VIEW IS BASED ON ROADWAY BASELINE.
PROFILE VIEW IS BASED ON SIDEPATH CENTERLINE.
2. REFER TO INTERSECTION LAYOUT FOR RAMP DETAILS.
3. LEAGUE CITY EASEMENT LOCATIONS ARE APPROXIMATE. CONTRACTOR TO VERIFY

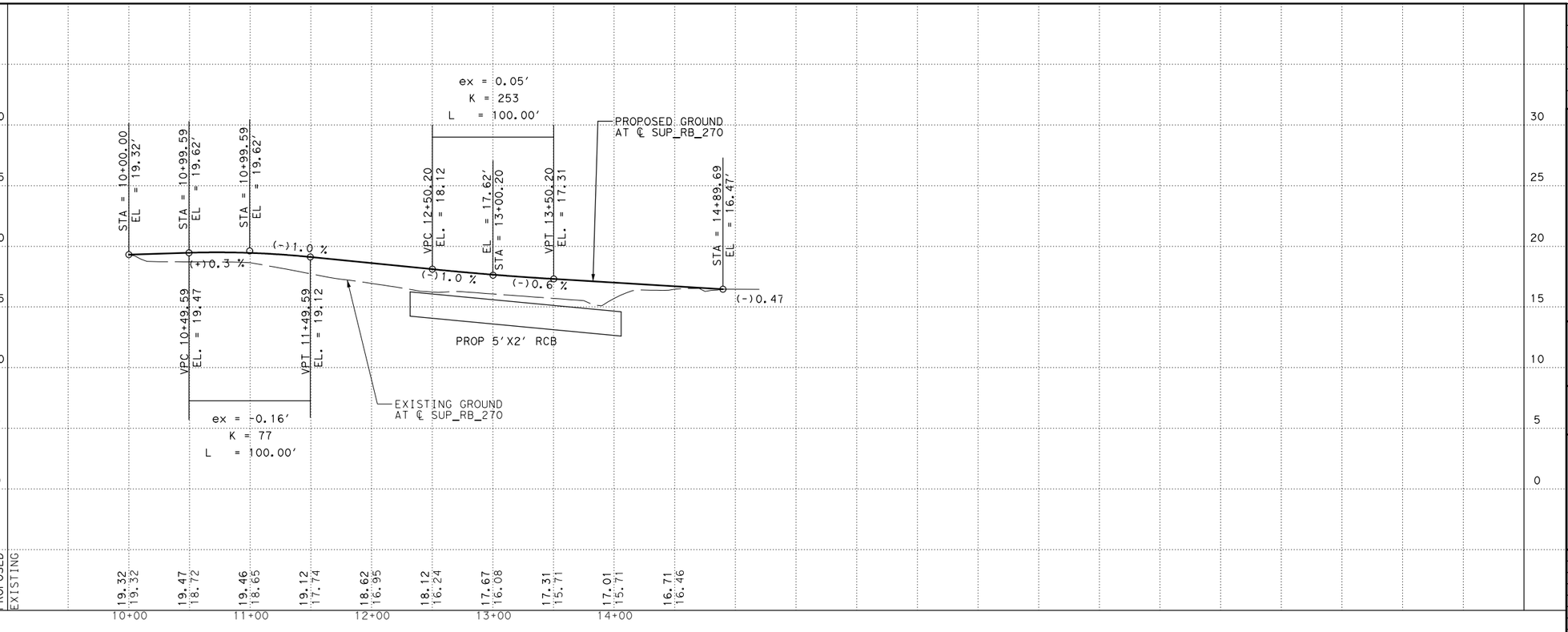

NO.	DATE	REVISION	APPROVED

STATE OF TEXAS
JOHANNA TORRES
130063
LICENSED PROFESSIONAL ENGINEER
johannatorres
8/2/2023

Texas Department of Transportation
©2023

JONES|CARTER
Texas Board of Professional Engineers Registration No. F-23290
4350 Lockhill Selma Rd, Suite 100• San Antonio, Texas 78249 •210.494.5511

SH 96, FM 270
FM 270
PLAN AND PROFILE
STA 232+00 TO END

SHEET **08** OF **29**

DRAWN	FED. RD. DIV. NO.	FEDERAL AID PROJECT NO.		HIGHWAY NO.
AA	06			FM 270, ETC
DESIGNED	STATE	DIST.	COUNTY	SHEET NO.
JT	TEXAS	HOUSTON	GALVESTON	127
CHECKED	CONT.	SECT.	JOB	
NG	0912	73	215	
APPROVED				
DD				

PENTABLE:LCBF.tbl
PLOTDRIVER:LCBF.pltcfg
DATE:8/2/2023 2:54:48 AM USER:do
FILE:c:\bms\pwe101-01\daniel.ontiveros\dms22648\LCBF_270-RDWY_08.dgn

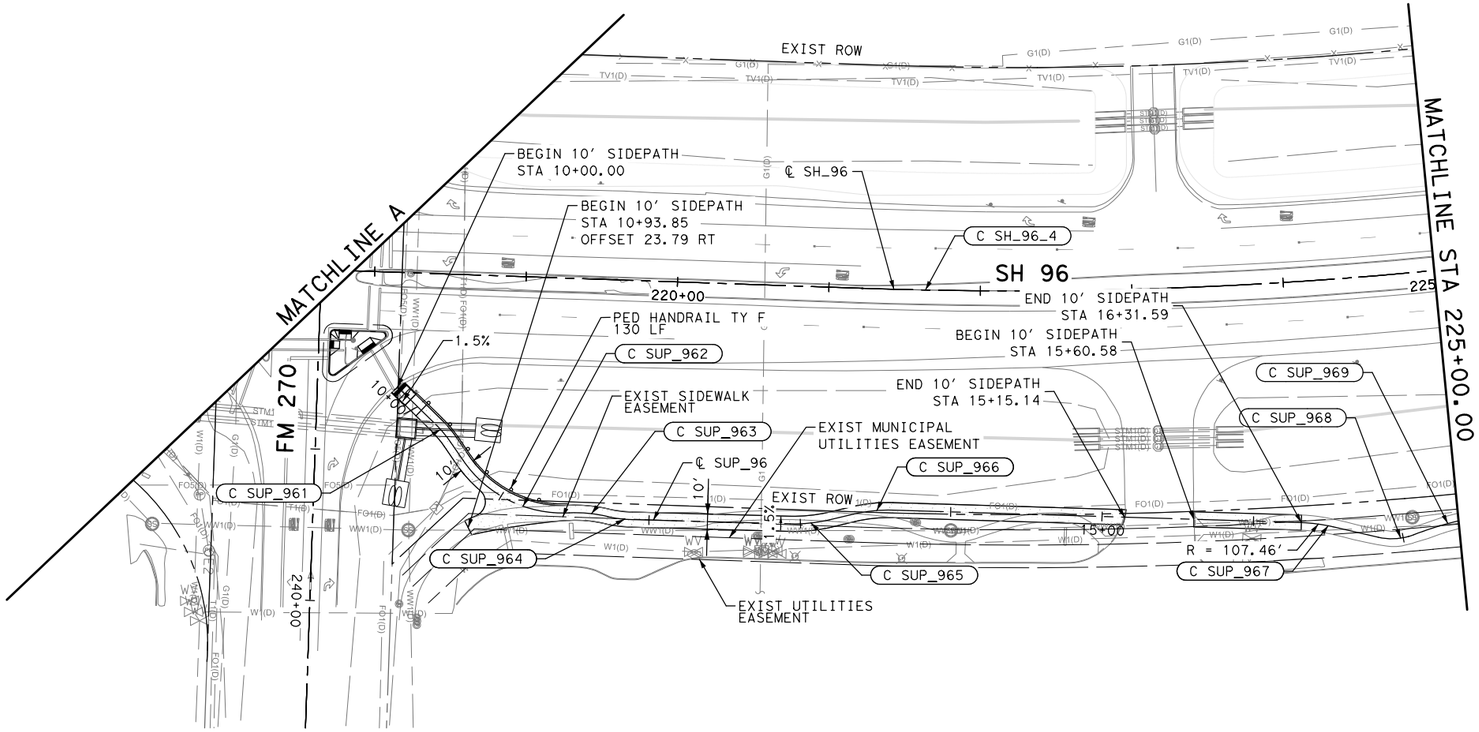

0' 25' 50' 100'

LEGEND:

- EXISTING DIRECTION OF TRAVEL
- DIRECTION OF TRAVEL
- EXISTING ROW
- SAWCUT LINE
- PROPOSED PEDESTRIAN HANDRAIL
- PROPOSED SIDEPATH
- PROPOSED WIDENING
- WETLAND
- PROPOSED ASPHALT DRIVEWAY
- PROPOSED CONCRETE DRIVEWAY
- DRIVEWAY NUMBER (#)
- C_XXX_XXX — CURVE NUMBER

NOTE:

1. PLAN VIEW IS BASED ON ROADWAY BASELINE.
   PROFILE VIEW IS BASED ON SIDEPATH CENTERLINE.
2. REFER TO INTERSECTION LAYOUT FOR RAMP DETAILS.
3. LEAGUE CITY EASEMENT LOCATIONS ARE APPROXIMATE. CONTRACTOR TO VERIFY

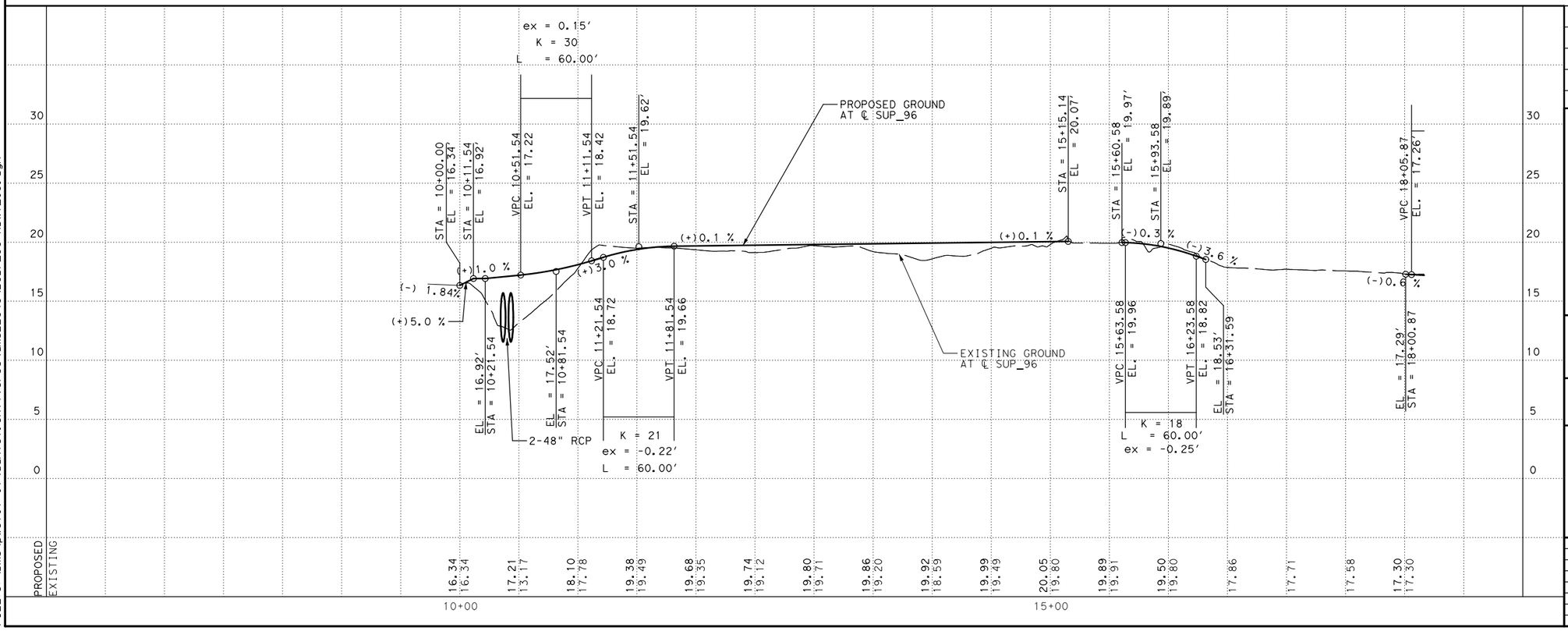

NO.	DATE	REVISION	APPROVED

STATE OF TEXAS
JOHANNA TORRES
130063
LICENSED PROFESSIONAL ENGINEER
johannatorres
8/2/2023

Texas Department of Transportation
©2023

JONES|CARTER
Texas Board of Professional Engineers Registration No. F-23290
4350 Lockhill Selma Rd, Suite 100• San Antonio, Texas 78249 •210.494.5511

SH 96, FM 270
SH 96
PLAN AND PROFILE
BEGIN TO STA 225+00

SHEET **09** OF **29**

DRAWN	FED. RD. DIV. NO.	FEDERAL AID PROJECT NO.		HIGHWAY NO.
AA	06			FM 270, ETC
DESIGNED	STATE	DIST.	COUNTY	SHEET NO.
JT	TEXAS	HOUSTON	GALVESTON	
CHECKED	CONT.	SECT.	JOB	128
NG	0912	73	215	
APPROVED				
DD				

PENTABLE:LCBF.tbl
PLOTDRIVER:LCBF.pltcfg
USER:do
2:54:50 AM
DATE:8/2/2023
FILE:c:\bms\pwe101-01\daniel.ontiveros\dms22648\LCBF_96-RDWY_09.dgn

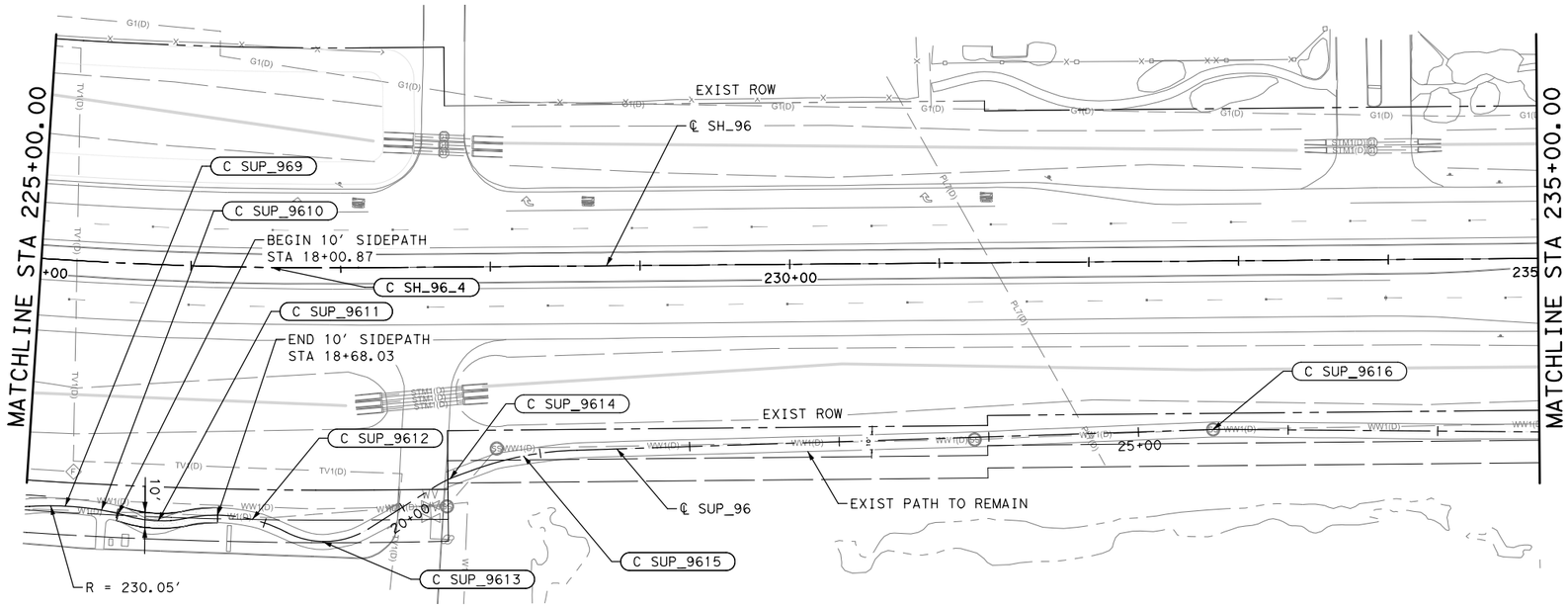

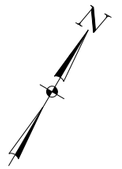

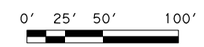

LEGEND:

- EXISTING DIRECTION OF TRAVEL
- DIRECTION OF TRAVEL
- EXISTING ROW
- SAWCUT LINE
- PROPOSED PEDESTRIAN HANDRAIL
- PROPOSED SIDEPATH
- PROPOSED WIDENING
- WETLAND
- PROPOSED ASPHALT DRIVEWAY
- PROPOSED CONCRETE DRIVEWAY
- # DRIVEWAY NUMBER
- C_XXX_XXX CURVE NUMBER

NOTE:

1. PLAN VIEW IS BASED ON ROADWAY BASELINE.
   PROFILE VIEW IS BASED ON SIDEPATH CENTERLINE.
2. REFER TO INTERSECTION LAYOUT FOR RAMP DETAILS.
3. LEAGUE CITY EASEMENT LOCATIONS ARE APPROXIMATE. CONTRACTOR TO VERIFY

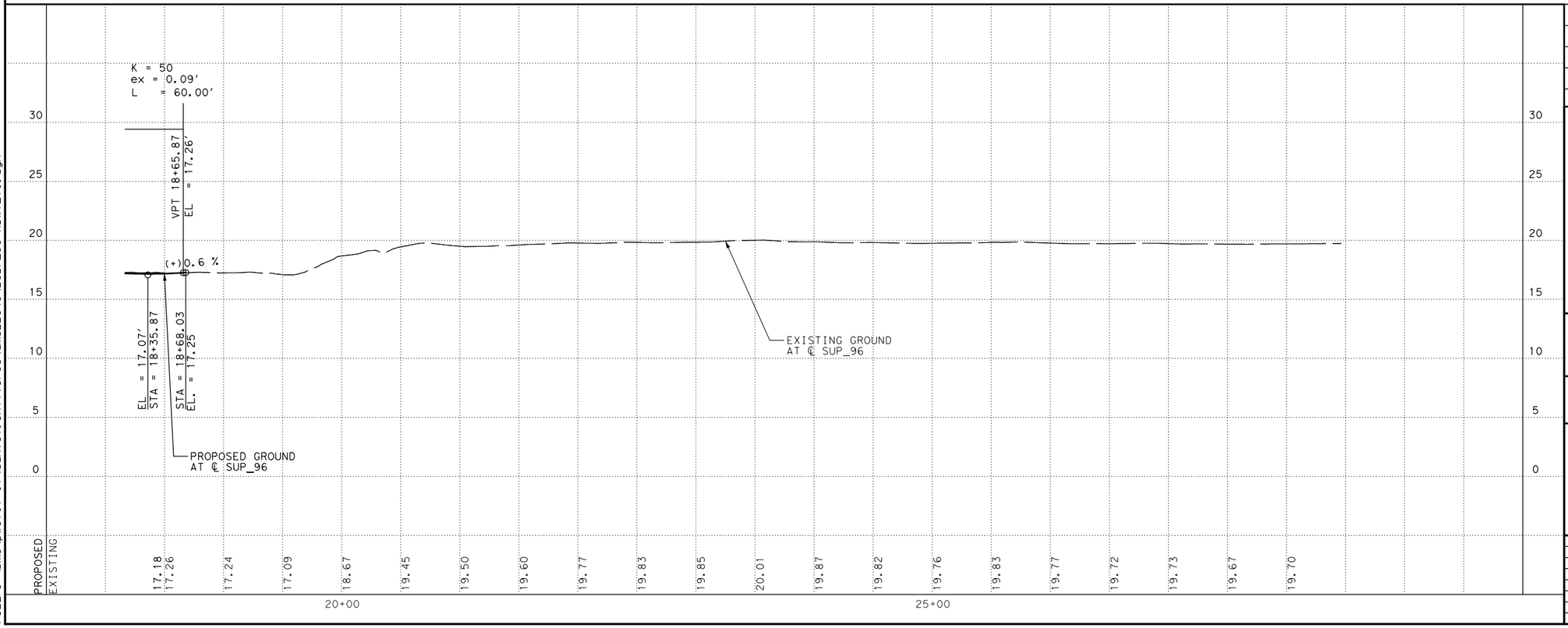

NO.	DATE	REVISION	APPROVED

JOHANNA TORRES
130063
LICENSED PROFESSIONAL ENGINEER
STATE OF TEXAS
johannatorres
8/2/2023

Texas Department of Transportation
©2023

JONES|CARTER
Texas Board of Professional Engineers Registration No. F-23290
4350 Lockhill Selma Rd, Suite 100• San Antonio, Texas 78249 •210.494.5511

SH 96, FM 270
SH 96
PLAN AND PROFILE
STA 225+00 TO STA 235+00

SHEET **10** OF **29**

DRAWN	FED.RD. DIV.NO.	FEDERAL AID PROJECT NO.		HIGHWAY NO.
AA	06			FM 270,ETC
DESIGNED	STATE	DIST.	COUNTY	SHEET NO.
JT	TEXAS	HOUSTON	GALVESTON	129
CHECKED	CONT.	SECT.	JOB	
NG	0912	73	215	
APPROVED				
DD				

PENTABLE:LCBF.tbl
PLOTDRIVER:LCBF.pltcfg
DATE:8/2/2023 2:54:53 AM USER:do
FILE:c:\bms\pwe101-01\daniel.ontiveros\dms22648\LCBF_96-RDWY_10.dgn

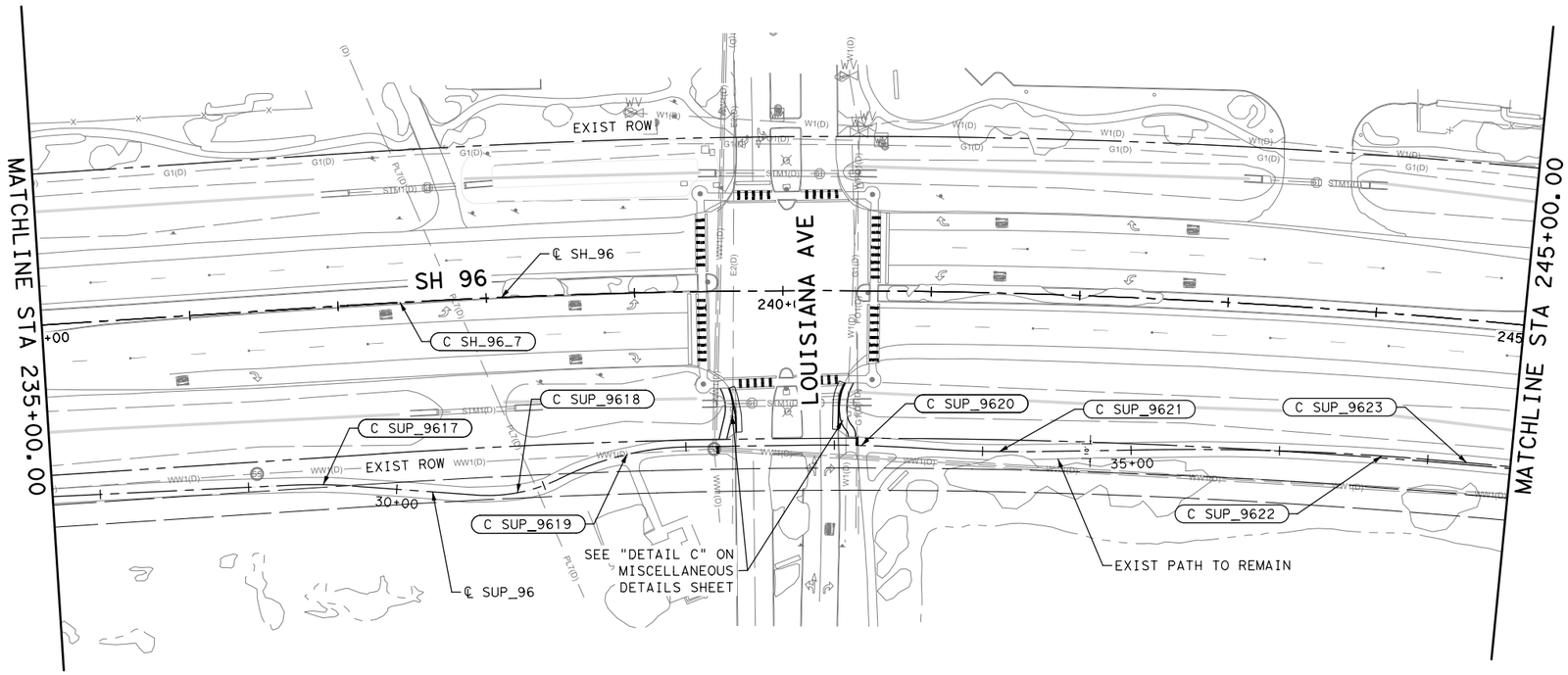

0′ 25′ 50′ 100′

LEGEND:

- EXISTING DIRECTION OF TRAVEL
- DIRECTION OF TRAVEL
- EXISTING ROW
- SAWCUT LINE
- PROPOSED PEDESTRIAN HANDRAIL
- PROPOSED SIDEPATH
- PROPOSED WIDENING
- WETLAND
- PROPOSED ASPHALT DRIVEWAY
- PROPOSED CONCRETE DRIVEWAY
- # DRIVEWAY NUMBER
- C_XXX_XXX CURVE NUMBER

NOTE:

1. PLAN VIEW IS BASED ON ROADWAY BASELINE.
   PROFILE VIEW IS BASED ON SIDEPATH CENTERLINE.
2. REFER TO INTERSECTION LAYOUT FOR RAMP DETAILS.
3. LEAGUE CITY EASEMENT LOCATIONS ARE APPROXIMATE. CONTRACTOR TO VERIFY

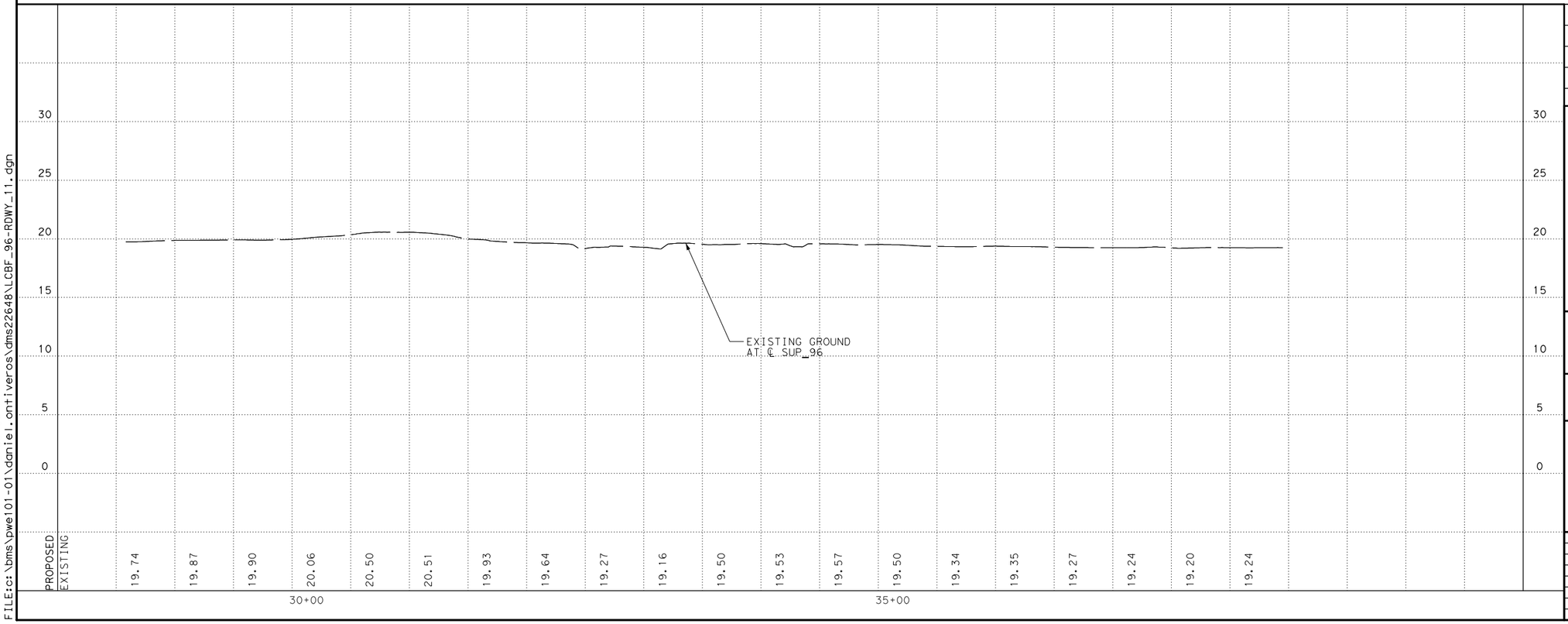

NO.	DATE	REVISION	APPROVED

STATE OF TEXAS
JOHANNA TORRES
130063
LICENSED PROFESSIONAL ENGINEER
johannatorres
8/2/2023

Texas Department of Transportation
©2023

JONES|CARTER
Texas Board of Professional Engineers Registration No. F-23290
4350 Lockhill Selma Rd, Suite 100• San Antonio, Texas 78249 •210.494.5511

SH 96, FM 270
SH 96
PLAN AND PROFILE
STA 235+00 TO STA 245+00

SHEET **11** OF **29**

DRAWN	FED. RD. DIV. NO.	FEDERAL AID PROJECT NO.		HIGHWAY NO.
AA	06			FM 270, ETC
DESIGNED	STATE	DIST.	COUNTY	SHEET NO.
JT	TEXAS	HOUSTON	GALVESTON	130
CHECKED	CONT.	SECT.	JOB	
NG	0912	73	215	
APPROVED				
DD				

PENTABLE: LCBF.tbl
PLOTDRIVER: LCBF.pltcfg
DATE: 8/2/2023 2:55:00 AM USER: do
FILE: c:\bms\pwe101-01\daniel.ontiveros\dms22648\LCBF_96-RDWY_11.dgn

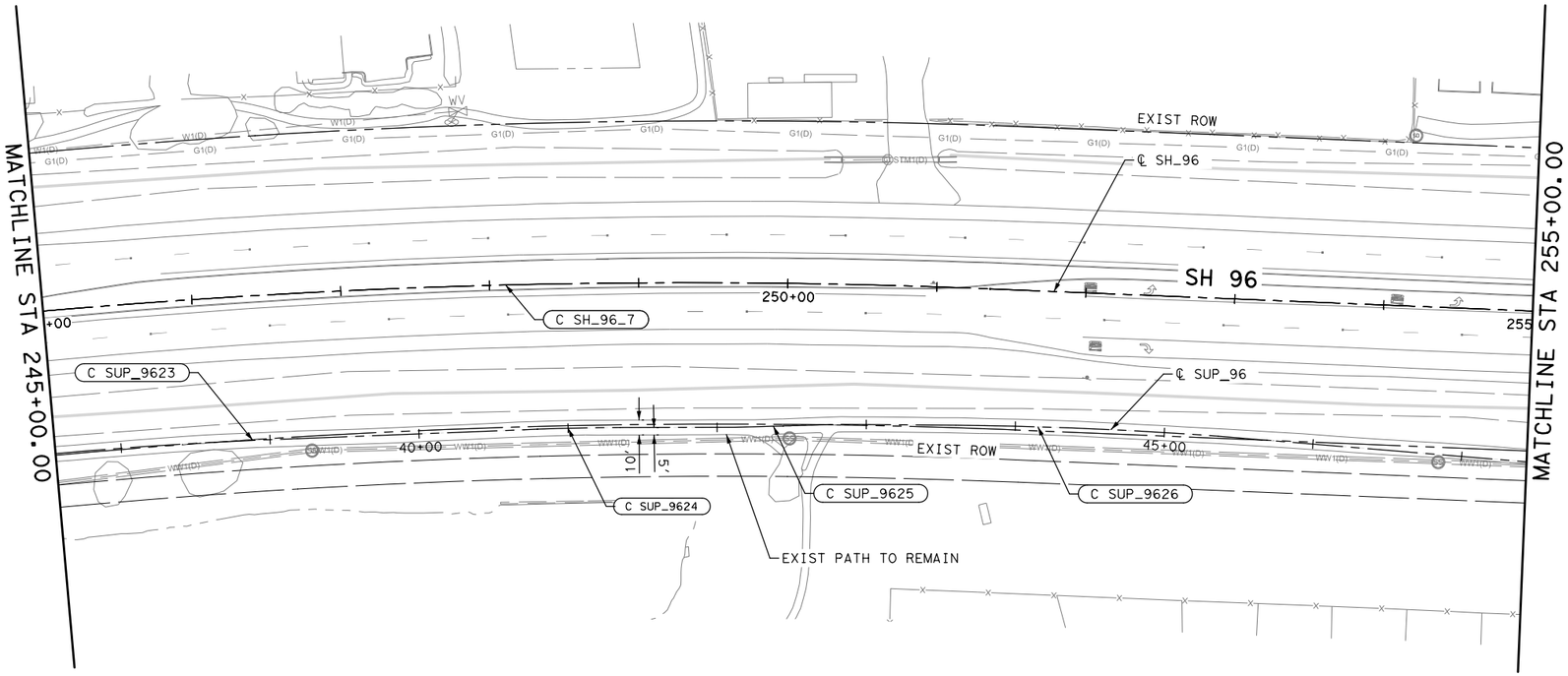

0' 25' 50' 100'

LEGEND:

- EXISTING DIRECTION OF TRAVEL
- DIRECTION OF TRAVEL
- EXISTING ROW
- SAWCUT LINE
- PROPOSED PEDESTRIAN HANDRAIL
- PROPOSED SIDEPATH
- PROPOSED WIDENING
- WETLAND
- PROPOSED ASPHALT DRIVEWAY
- PROPOSED CONCRETE DRIVEWAY
- # DRIVEWAY NUMBER
- C_XXX_XXX CURVE NUMBER

NOTE:

1. PLAN VIEW IS BASED ON ROADWAY BASELINE.
PROFILE VIEW IS BASED ON SIDEPATH CENTERLINE.
2. REFER TO INTERSECTION LAYOUT FOR RAMP DETAILS.
3. LEAGUE CITY EASEMENT LOCATIONS ARE APPROXIMATE. CONTRACTOR TO VERIFY

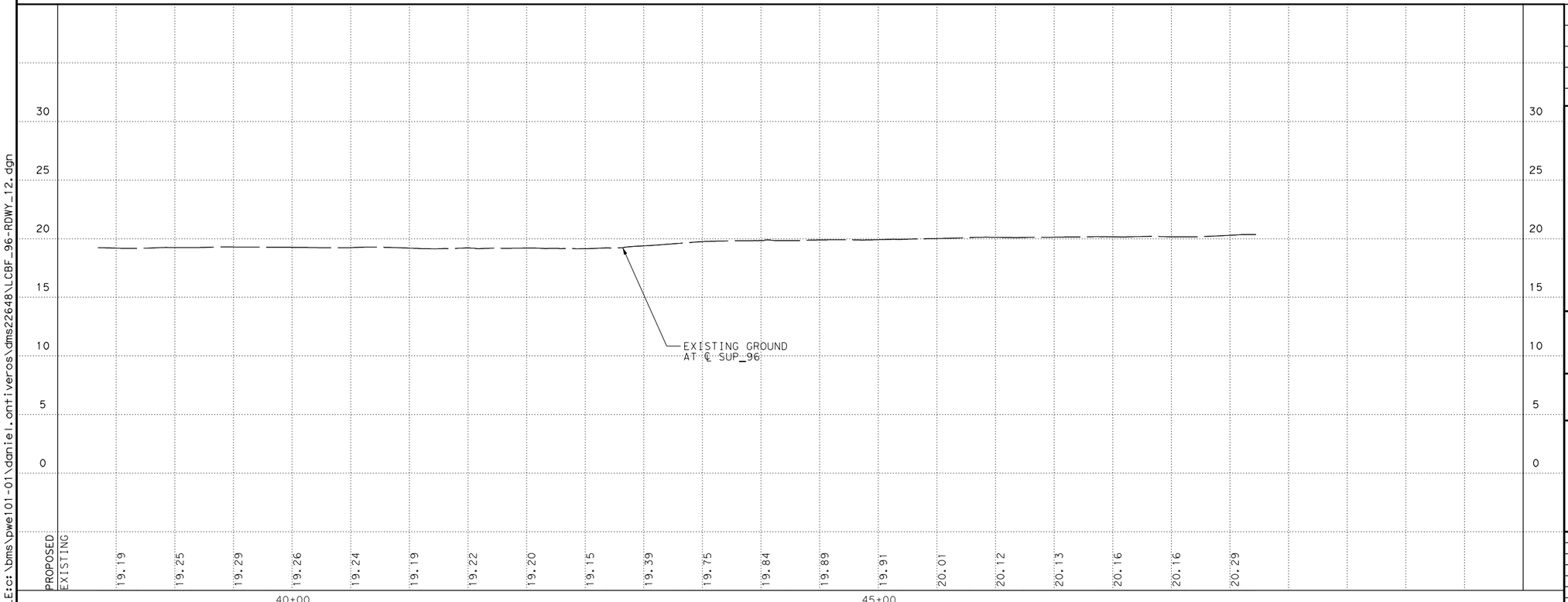

NO.	DATE	REVISION	APPROVED

STATE OF TEXAS
JOHANNA TORRES
130063
LICENSED PROFESSIONAL ENGINEER
johannatorres
8/2/2023

Texas Department of Transportation
©2023

JONES|CARTER
Texas Board of Professional Engineers Registration No. F-23290
4350 Lockhill Selma Rd, Suite 100• San Antonio, Texas 78249 •210.494.5511

SH 96, FM 270
SH 96
PLAN AND PROFILE
STA 245+00 TO STA 255+00

SHEET **12** OF **29**

DRAWN	FED. RD. DIV. NO.	FEDERAL AID PROJECT NO.		HIGHWAY NO.
AA	06			FM 270, ETC
DESIGNED	STATE	DIST.	COUNTY	SHEET NO.
JT	TEXAS	HOUSTON	GALVESTON	131
CHECKED	CONT.	SECT.	JOB	
NG	0912	73	215	
APPROVED				
DD				

PENTABLE:LCBF.tbl
PLOTDRIVER:LCBF.pltcfg
DATE:8/2/2023 2:55:03 AM USER:do
FILE:c:\bms\pwe101-01\daniel.ontiveros\dms22648\LCBF_96-RDWY_12.dgn

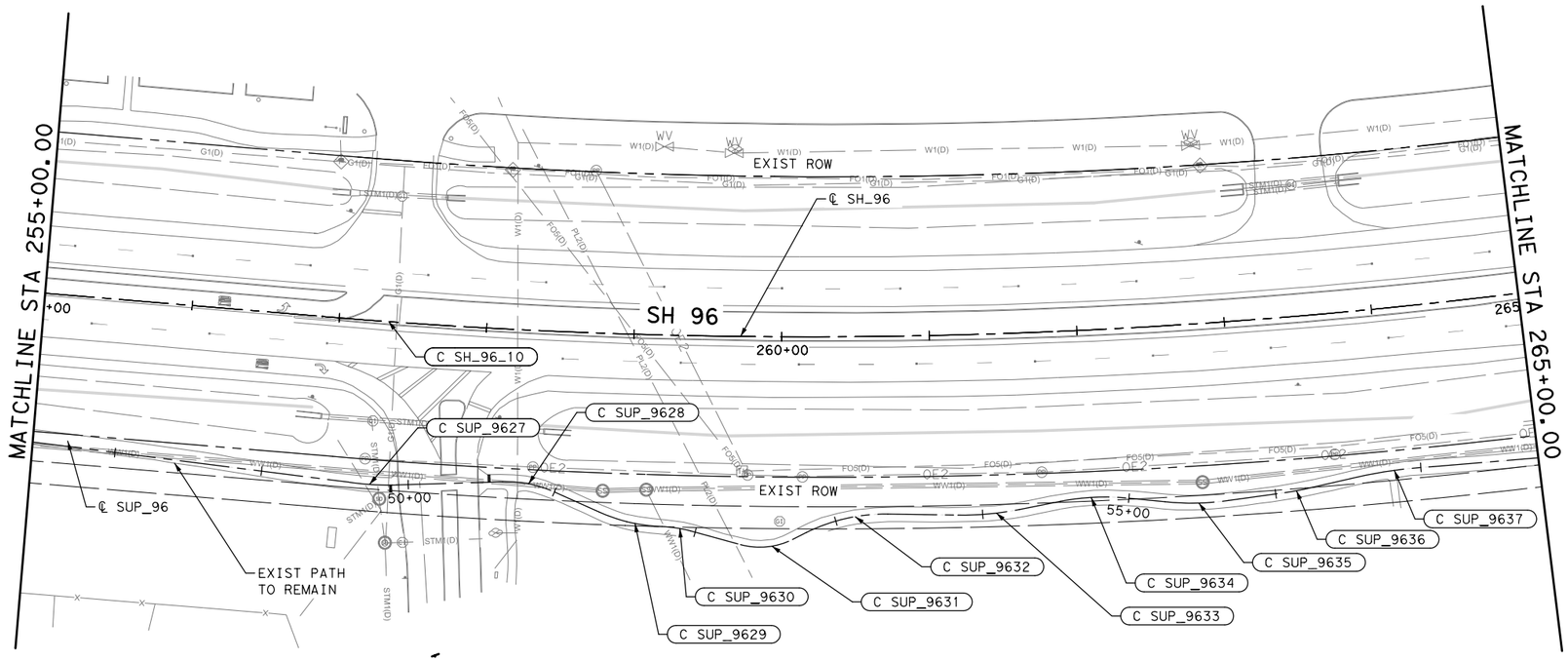

0′ 25′ 50′ 100′

LEGEND:

- EXISTING DIRECTION OF TRAVEL
- DIRECTION OF TRAVEL
- EXISTING ROW
- SAWCUT LINE
- PROPOSED PEDESTRIAN HANDRAIL
- PROPOSED SIDEPATH
- PROPOSED WIDENING
- WETLAND
- PROPOSED ASPHALT DRIVEWAY
- PROPOSED CONCRETE DRIVEWAY
- # DRIVEWAY NUMBER
- C_XXX_XXX CURVE NUMBER

NOTE:

1. PLAN VIEW IS BASED ON ROADWAY BASELINE.
   PROFILE VIEW IS BASED ON SIDEPATH CENTERLINE.
2. REFER TO INTERSECTION LAYOUT FOR RAMP DETAILS.
3. LEAGUE CITY EASEMENT LOCATIONS ARE APPROXIMATE. CONTRACTOR TO VERIFY

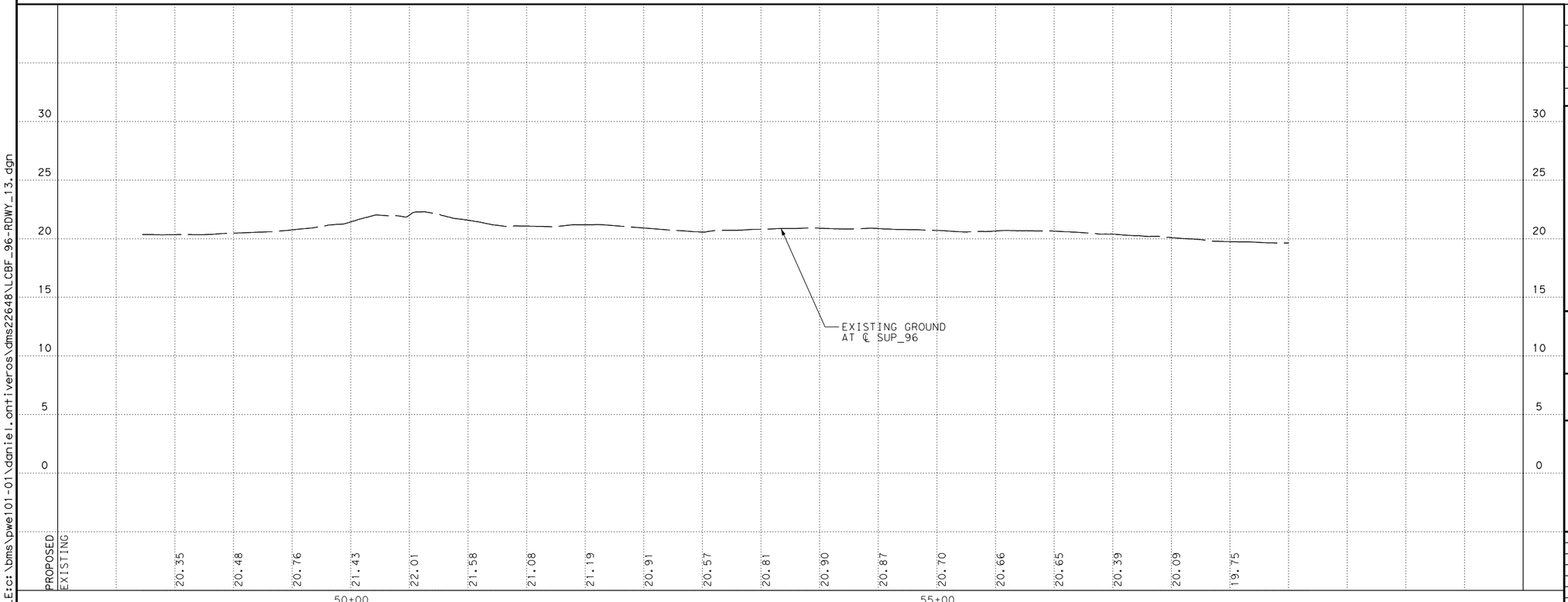

NO.	DATE	REVISION	APPROVED

STATE OF TEXAS
JOHANNA TORRES
130063
LICENSED
PROFESSIONAL ENGINEER
johannatorres
8/2/2023

Texas Department of Transportation
©2023

JONES|CARTER
Texas Board of Professional Engineers Registration No. F-23290
4350 Lockhill Selma Rd, Suite 100• San Antonio, Texas 78249 •210.494.5511

SH 96, FM 270
SH 96
PLAN AND PROFILE
STA 255+00 TO STA 265+00

SHEET **13** OF **29**

DRAWN	FED. RD. DIV. NO.	FEDERAL AID PROJECT NO.		HIGHWAY NO.
AA	06			FM 270, ETC
DESIGNED	STATE	DIST.	COUNTY	SHEET NO.
JT	TEXAS	HOUSTON	GALVESTON	132
CHECKED	CONT.	SECT.	JOB	
NG	0912	73	215	
APPROVED				
DD				

PENTABLE:LCBF.tbl
PLOTDRIVER:LCBF.pltcfg
DATE:8/2/2023 2:55:06 AM USER:do
FILE:c:\bms\pwe101-01\daniel.ontiveros\dms22648\LCBF_96-RDWY_13.dgn

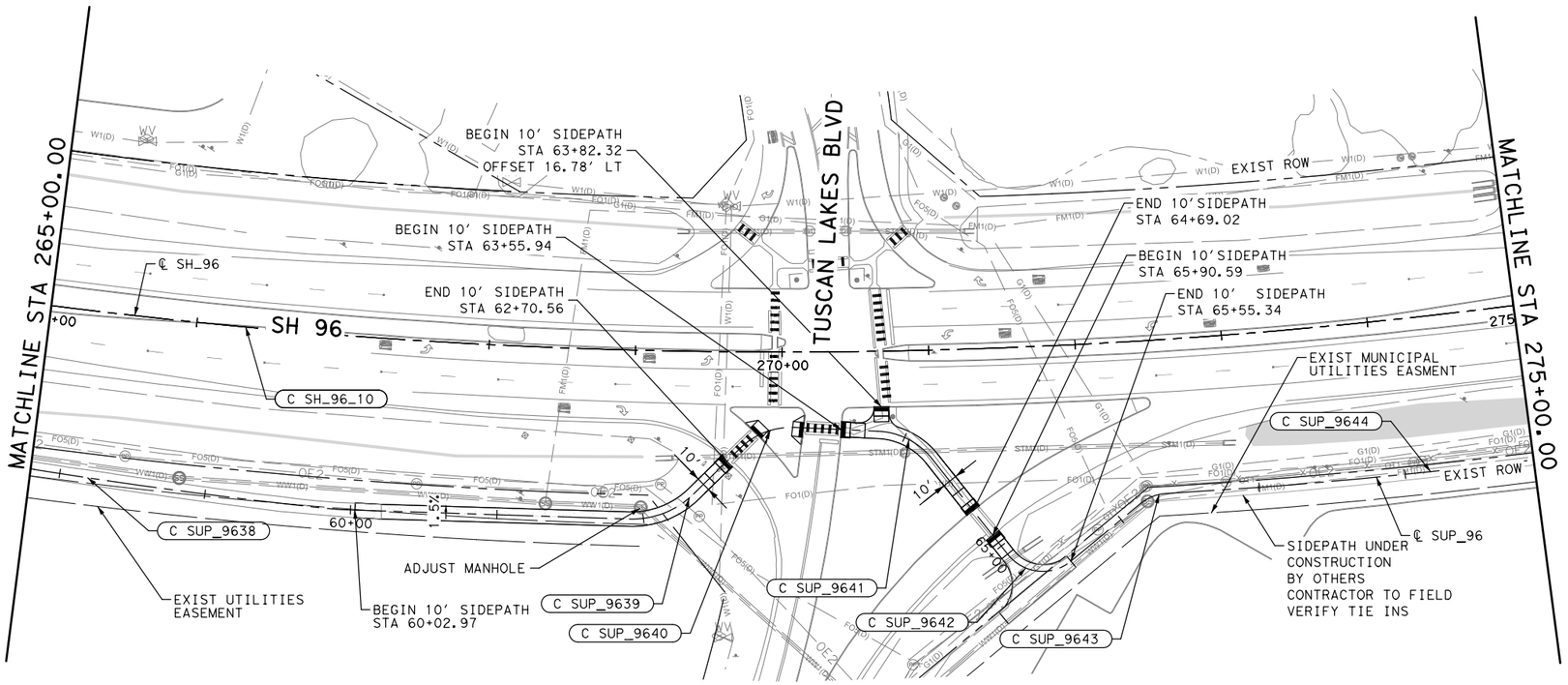

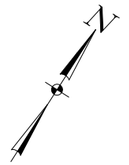

0' 25' 50' 100'

LEGEND:

- EXISTING DIRECTION OF TRAVEL
- DIRECTION OF TRAVEL
- EXISTING ROW
- SAWCUT LINE
- PROPOSED PEDESTRIAN HANDRAIL
- PROPOSED SIDEPATH
- PROPOSED WIDENING
- WETLAND
- PROPOSED ASPHALT DRIVEWAY
- PROPOSED CONCRETE DRIVEWAY
- # DRIVEWAY NUMBER
- C_XXX_XXX CURVE NUMBER

NOTE:

1. PLAN VIEW IS BASED ON ROADWAY BASELINE.
PROFILE VIEW IS BASED ON SIDEPATH CENTERLINE.
2. REFER TO INTERSECTION LAYOUT FOR RAMP DETAILS.
3. LEAGUE CITY EASEMENT LOCATIONS ARE APPROXIMATE. CONTRACTOR TO VERIFY

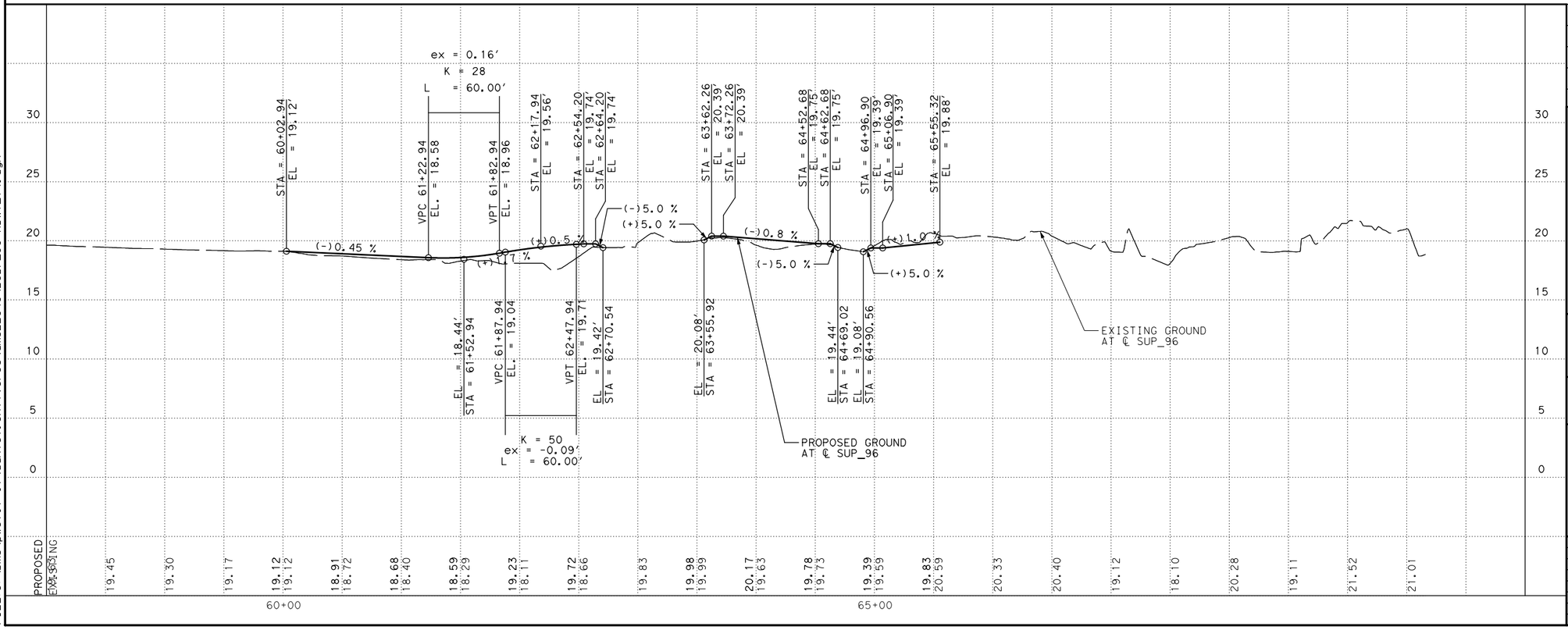

NO.	DATE	REVISION	APPROVED

Texas Department of Transportation
©2023

JONES|CARTER
Texas Board of Professional Engineers Registration No. F-23290
4350 Lockhill Selma Rd, Suite 100• San Antonio, Texas 78249 •210.494.5511

SH 96, FM 270
SH 96
PLAN AND PROFILE
STA 265+00 TO STA 275+00

SHEET **14** OF **29**

DRAWN	FED.RD. DIV.NO.	FEDERAL AID PROJECT NO.		HIGHWAY NO.
AA	06			FM 270,ETC
DESIGNED	STATE	DIST.	COUNTY	SHEET NO.
JT	TEXAS	HOUSTON	GALVESTON	133
CHECKED	CONT.	SECT.	JOB	
NG	0912	73	215	
APPROVED				
DD				

PENTABLE:LCBF.tbl
PLOTDRIVER:LCBF.pltcfg
DATE:8/2/2023 2:55:09 AM USER:do
FILE:c:\bms\pwe101-01\daniel.ontiveros\dms22648\LCBF_96-RDWY_14.dgn

PENTABLE:LCBF.tbl
PLOTDRIVER:LCBF.pltcfg
DATE:8/2/2023 2:55:12 AM USER:do
FILE:c:\bms\pwe101-01\daniel.ontiveros\dms22648\LCBF_96-RDWY_15.dgn

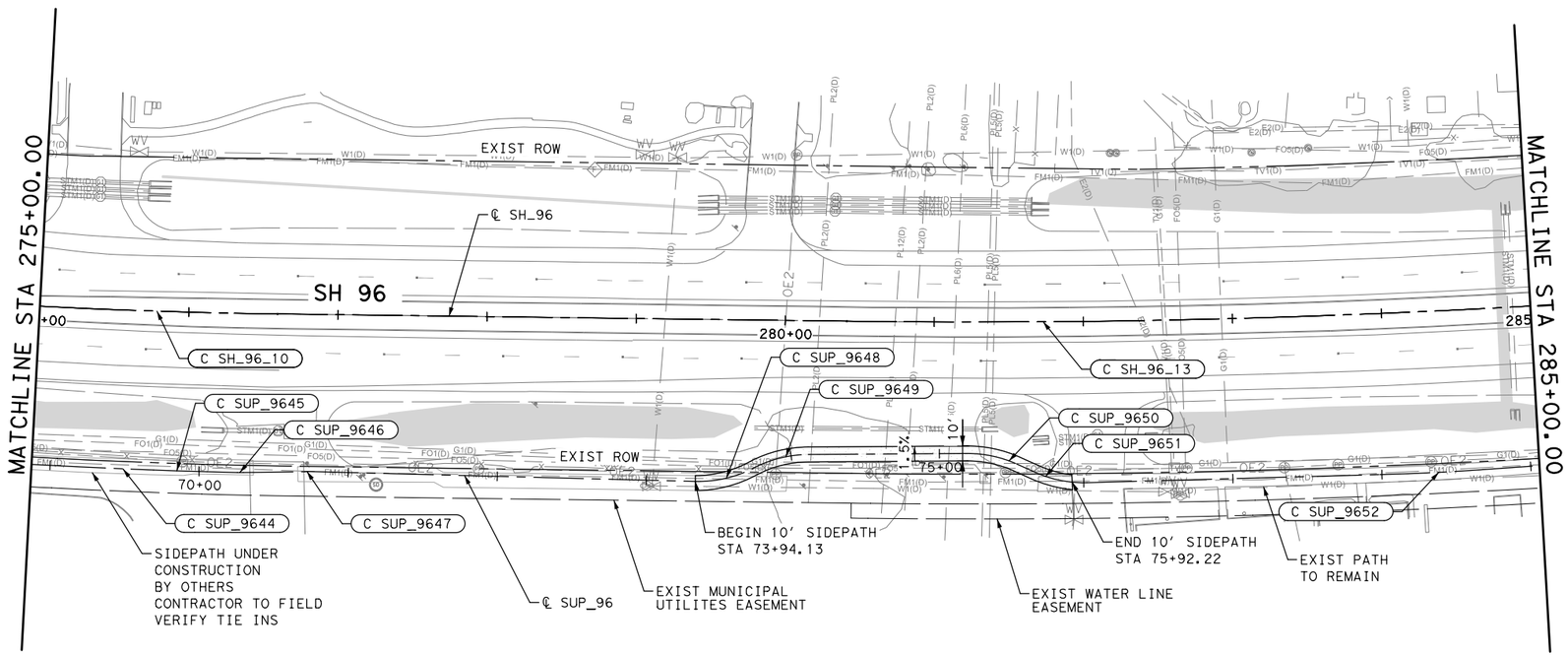

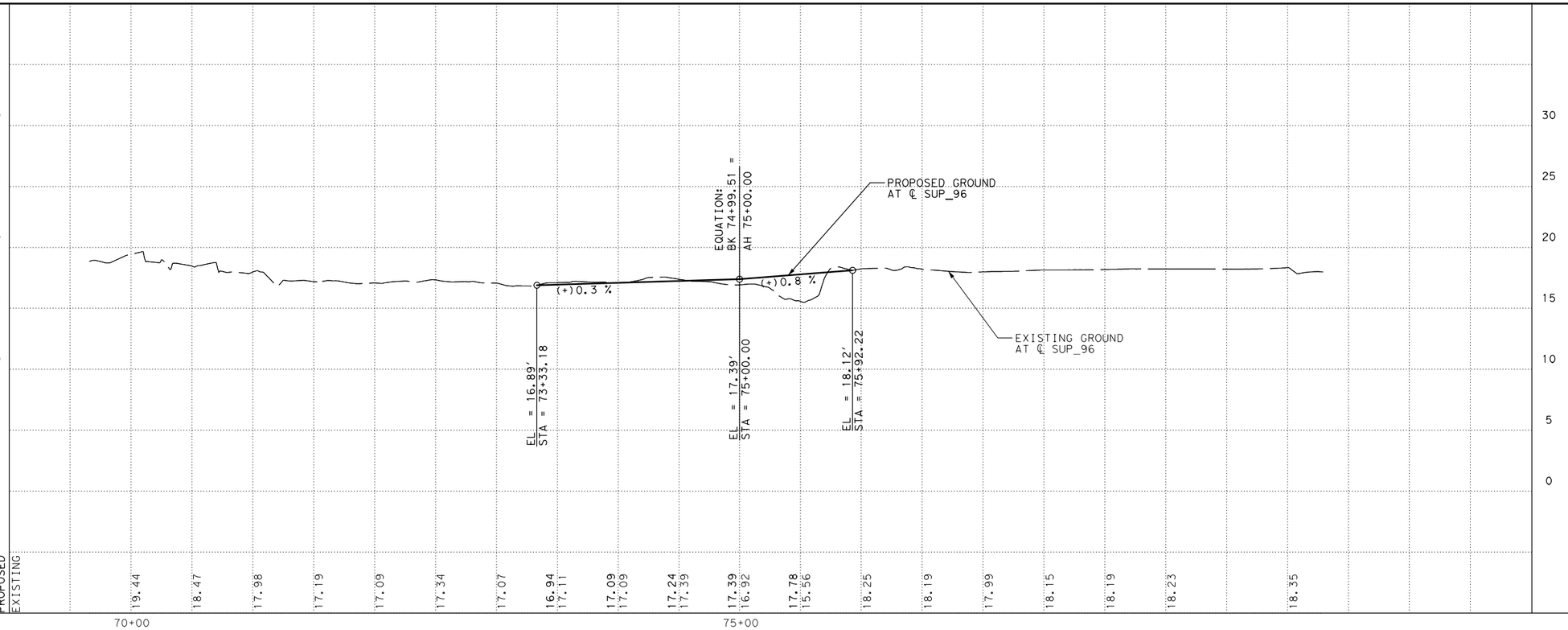

0' 25' 50' 100'

LEGEND:

- EXISTING DIRECTION OF TRAVEL
- DIRECTION OF TRAVEL
- EXISTING ROW
- SAWCUT LINE
- PROPOSED PEDESTRIAN HANDRAIL
- PROPOSED SIDEPATH
- PROPOSED WIDENING
- WETLAND
- PROPOSED ASPHALT DRIVEWAY
- PROPOSED CONCRETE DRIVEWAY
- # DRIVEWAY NUMBER
- C_XXX_XXX CURVE NUMBER

NOTE:

1. PLAN VIEW IS BASED ON ROADWAY BASELINE. PROFILE VIEW IS BASED ON SIDEPATH CENTERLINE.
2. REFER TO INTERSECTION LAYOUT FOR RAMP DETAILS.

NO.	DATE	REVISION	APPROVED

STATE OF TEXAS
JOHANNA TORRES
130063
LICENSED PROFESSIONAL ENGINEER
johannatorres
8/2/2023

Texas Department of Transportation
©2023

JONES|CARTER
Texas Board of Professional Engineers Registration No. F-23290
4350 Lockhill Selma Rd, Suite 100• San Antonio, Texas 78249 •210.494.5511

SH 96, FM 270
SH 96
PLAN AND PROFILE
STA 275+00 TO STA 285+00

SHEET **15** OF **28**

DRAWN	FED.RD. DIV.NO.	FEDERAL AID PROJECT NO.		HIGHWAY NO.
AA	06			FM 270, ETC
DESIGNED	STATE	DIST.	COUNTY	SHEET NO.
JT	TEXAS	HOUSTON	GALVESTON	134
CHECKED	CONT.	SECT.	JOB	
NG	0912	73	215	
APPROVED				
DD				

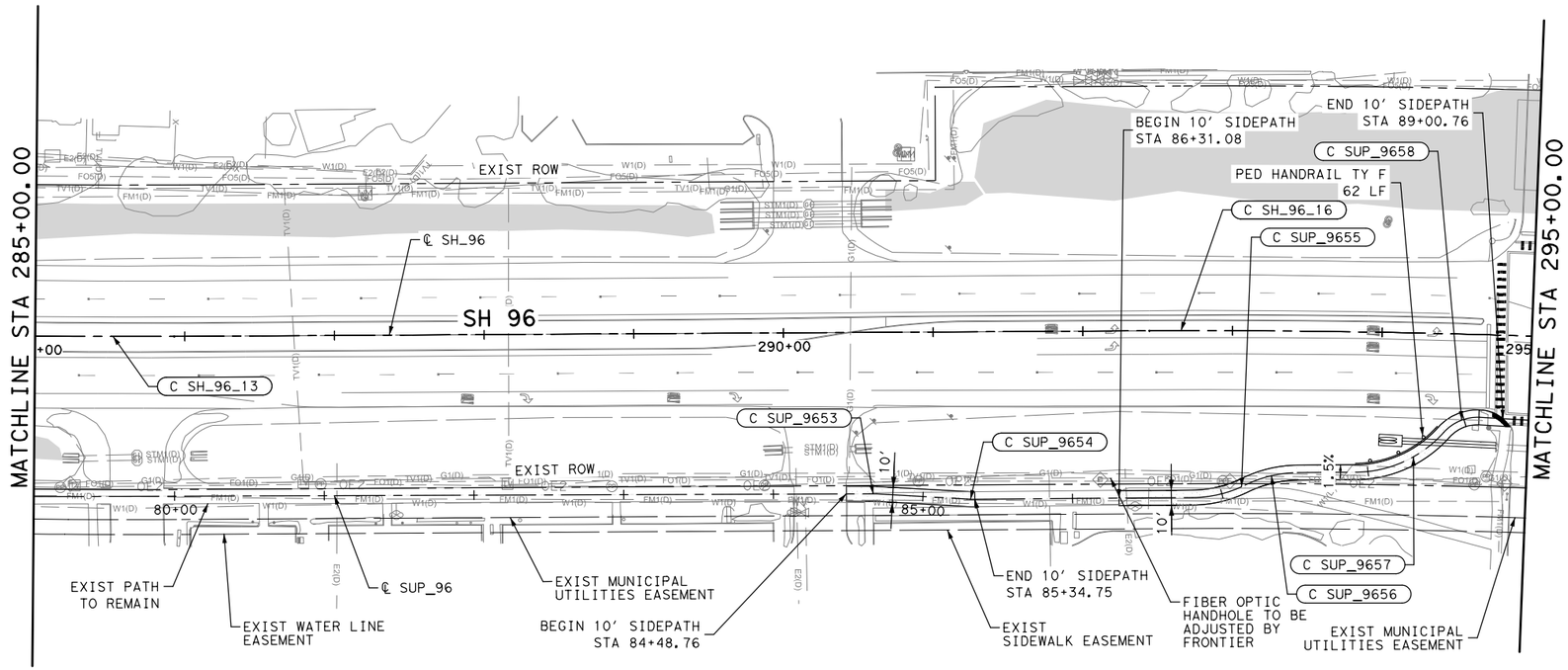

0' 25' 50' 100'

LEGEND:

- EXISTING DIRECTION OF TRAVEL
- DIRECTION OF TRAVEL
- EXISTING ROW
- SAWCUT LINE
- PROPOSED PEDESTRIAN HANDRAIL
- PROPOSED SIDEPATH
- PROPOSED WIDENING
- WETLAND
- PROPOSED ASPHALT DRIVEWAY
- PROPOSED CONCRETE DRIVEWAY
- (#) DRIVEWAY NUMBER
- (C_XXX_XXX) CURVE NUMBER

NOTE:

1. PLAN VIEW IS BASED ON ROADWAY BASELINE.
   PROFILE VIEW IS BASED ON SIDEPATH CENTERLINE.
2. REFER TO INTERSECTION LAYOUT FOR RAMP DETAILS.
3. LEAGUE CITY EASEMENT LOCATIONS ARE APPROXIMATE. CONTRACTOR TO VERIFY

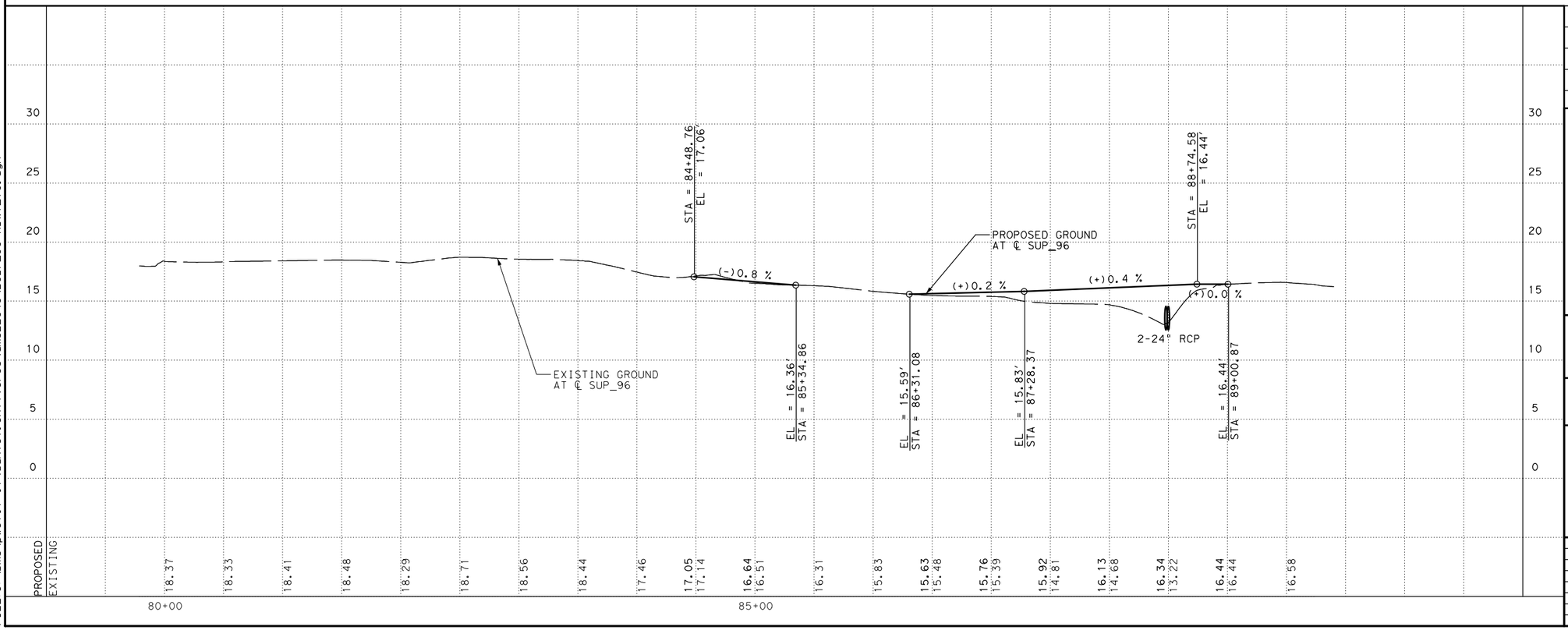

NO.	DATE	REVISION	APPROVED

JOHANNA TORRES
130063
LICENSED PROFESSIONAL ENGINEER
STATE OF TEXAS
johannatorres
8/2/2023

Texas Department of Transportation
©2023

JONES|CARTER
Texas Board of Professional Engineers Registration No. F-23290
4350 Lockhill Selma Rd, Suite 100• San Antonio, Texas 78249 • 210.494.5511

SH 96, FM 270
SH 96
PLAN AND PROFILE
STA 285+00 TO STA 295+00

SHEET **16** OF **29**

DRAWN	FED.RD. DIV.NO.	FEDERAL AID PROJECT NO.		HIGHWAY NO.
AA	06			FM 270, ETC
DESIGNED	STATE	DIST.	COUNTY	SHEET NO.
JT	TEXAS	HOUSTON	GALVESTON	135
CHECKED	CONT.	SECT.	JOB	
NG	0912	73	215	
APPROVED				
DD				

PLOTDRIVER: LCBF.plt.cfg
PENTABLE: LCBF.tbl
DATE: 8/2/2023 2:55:15 AM USER: do
FILE: c:\bms\pwe101-01\daniel.ontiveros\dms22648\LCBF_96-RDWY_16.dgn

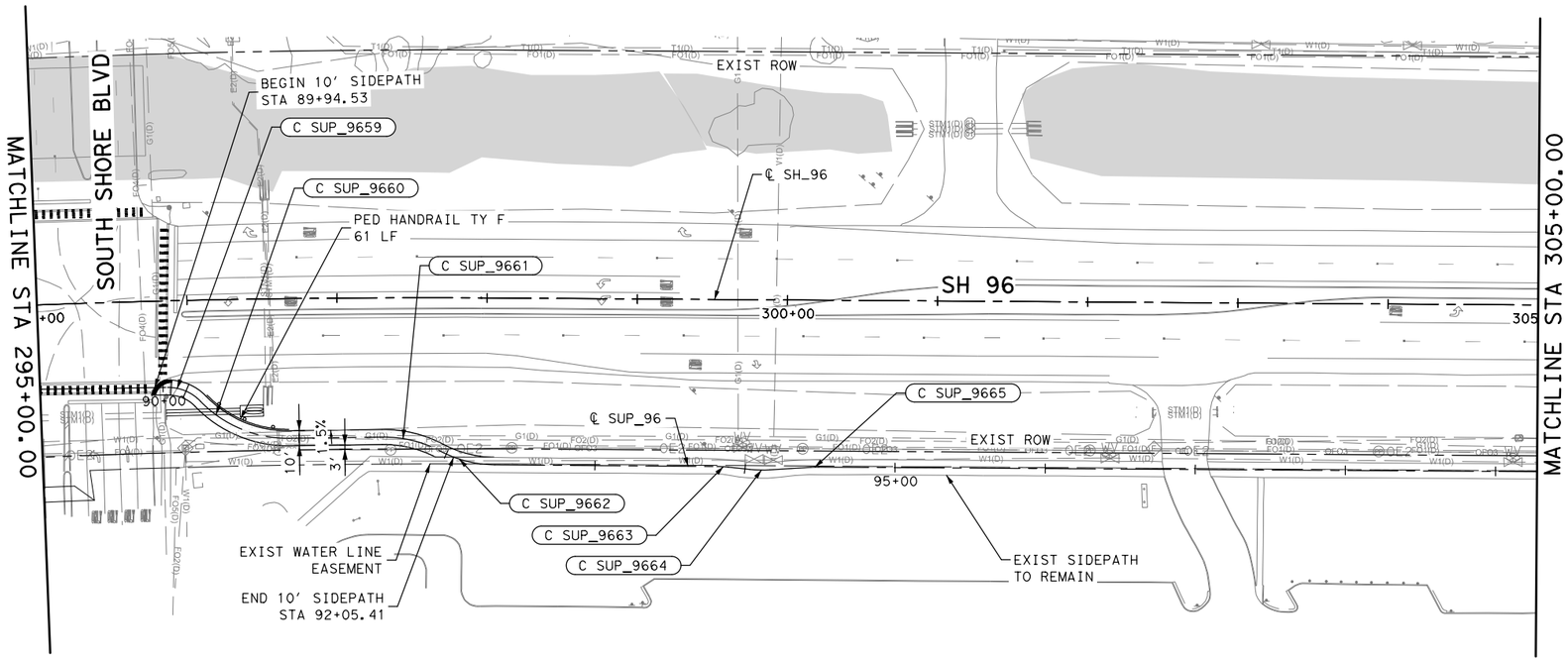

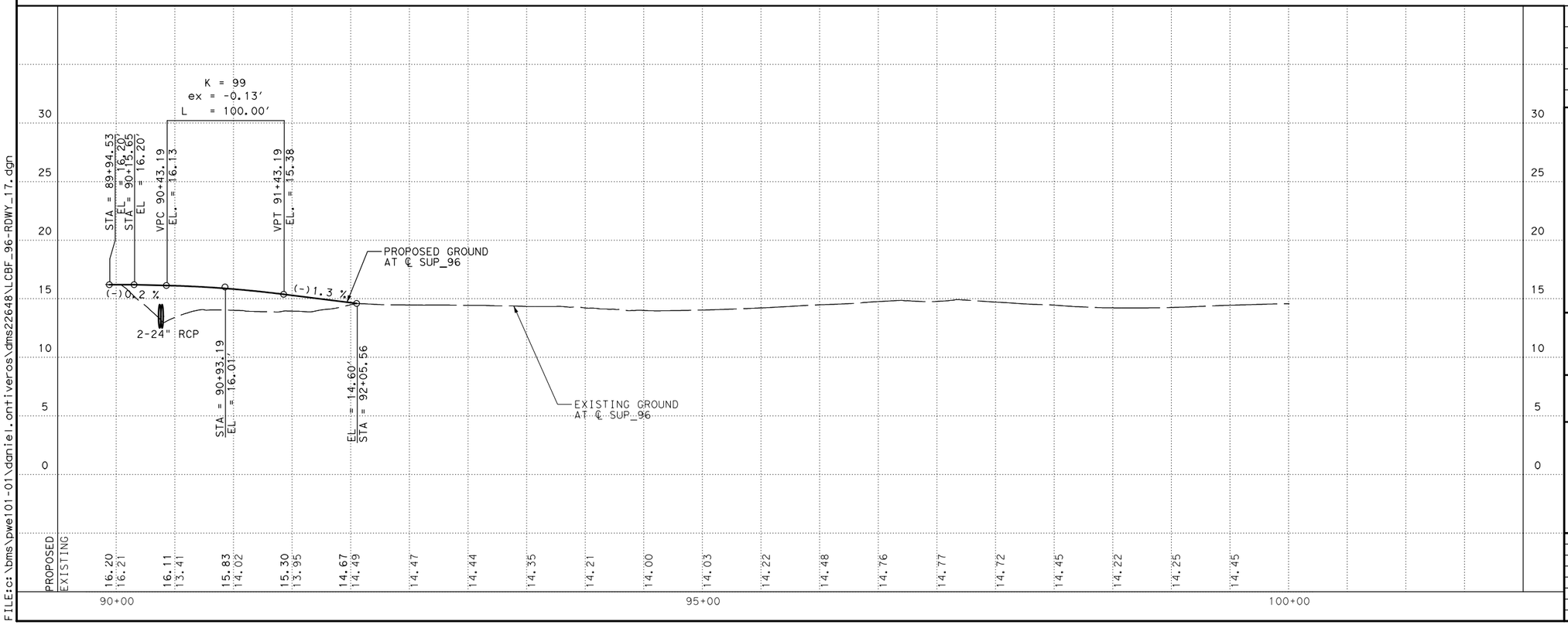

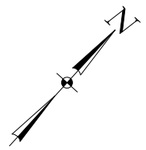

0' 25' 50' 100'

LEGEND:

- EXISTING DIRECTION OF TRAVEL
- DIRECTION OF TRAVEL
- EXISTING ROW
- SAWCUT LINE
- PROPOSED PEDESTRIAN HANDRAIL
- PROPOSED SIDEPATH
- PROPOSED WIDENING
- WETLAND
- PROPOSED ASPHALT DRIVEWAY
- PROPOSED CONCRETE DRIVEWAY
- # DRIVEWAY NUMBER
- C_XXX_XXX CURVE NUMBER

NOTE:

1. PLAN VIEW IS BASED ON ROADWAY BASELINE.
   PROFILE VIEW IS BASED ON SIDEPATH CENTERLINE.
2. REFER TO INTERSECTION LAYOUT FOR RAMP DETAILS.
3. LEAGUE CITY EASEMENT LOCATIONS ARE APPROXIMATE. CONTRACTOR TO VERIFY

NO.	DATE	REVISION	APPROVED

STATE OF TEXAS
JOHANNA TORRES
130063
LICENSED PROFESSIONAL ENGINEER
johannatorres
8/2/2023

Texas Department of Transportation
©2023

JONES|CARTER
Texas Board of Professional Engineers Registration No. F-23290
4350 Lockhill Selma Rd, Suite 100•San Antonio, Texas 78249•210.494.5511

SH 96, FM 270
SH 96
PLAN AND PROFILE
STA 295+00 TO STA 305+00

SHEET **17** OF **29**

DRAWN	FED.RD. DIV.NO.	FEDERAL AID PROJECT NO.		HIGHWAY NO.
AA	06			FM 270, ETC
DESIGNED	STATE	DIST.	COUNTY	SHEET NO.
JT	TEXAS	HOUSTON	GALVESTON	136
CHECKED	CONT.	SECT.	JOB	
NG	0912	73	215	
APPROVED				
DD				

PENTABLE:LCBF.tbl
PLOTDRIVER:LCBF.pltcfg
DATE:8/2/2023 2:55:18 AM USER:do
FILE:c:\bms\pwe101-01\daniel.ontiveros\dms22648\LCBF_96-RDWY_17.dgn

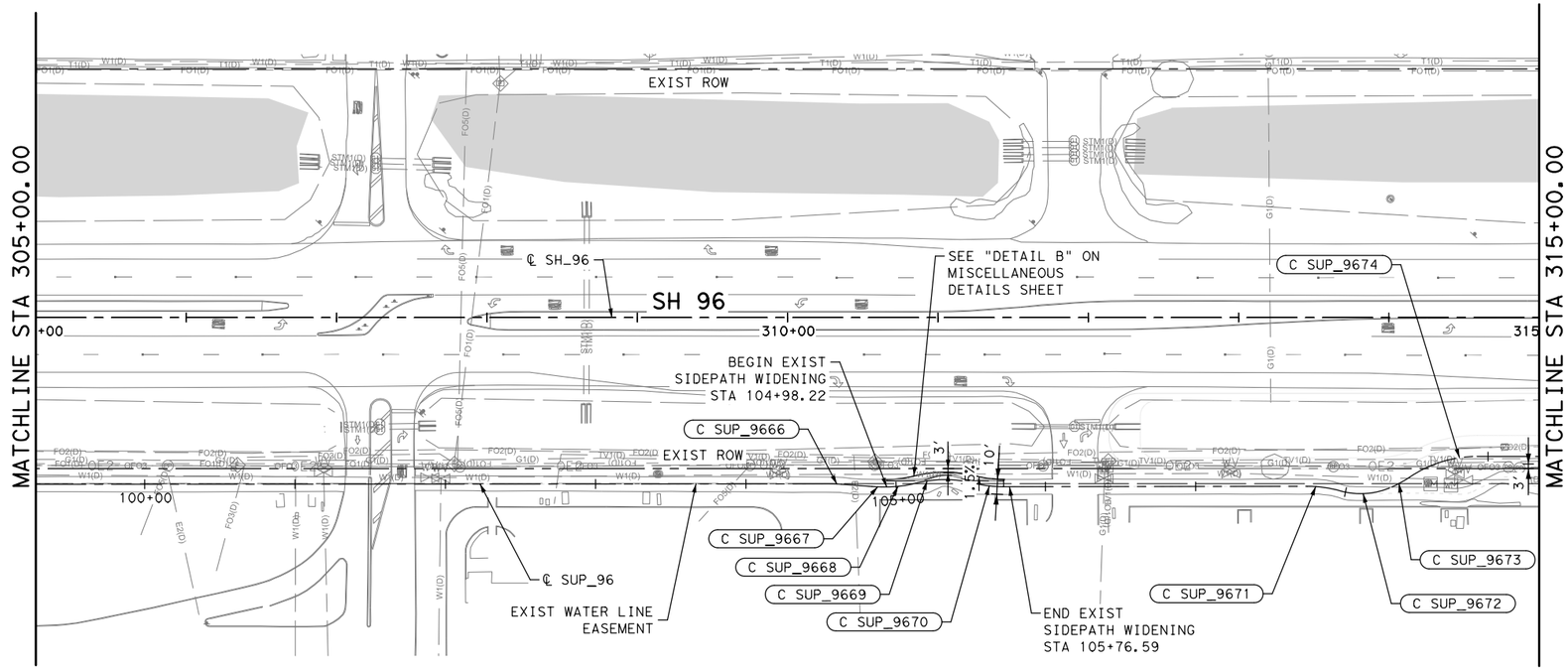

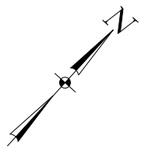

0′ 25′ 50′ 100′

LEGEND:

- EXISTING DIRECTION OF TRAVEL
- DIRECTION OF TRAVEL
- EXISTING ROW
- SAWCUT LINE
- PROPOSED PEDESTRIAN HANDRAIL
- PROPOSED SIDEPATH
- PROPOSED WIDENING
- WETLAND
- PROPOSED ASPHALT DRIVEWAY
- PROPOSED CONCRETE DRIVEWAY
- (#) DRIVEWAY NUMBER
- C_XXX_XXX CURVE NUMBER

NOTE:

1. PLAN VIEW IS BASED ON ROADWAY BASELINE.
   PROFILE VIEW IS BASED ON SIDEPATH CENTERLINE.
2. REFER TO INTERSECTION LAYOUT FOR RAMP DETAILS.
3. LEAGUE CITY EASEMENT LOCATIONS ARE APPROXIMATE. CONTRACTOR TO VERIFY

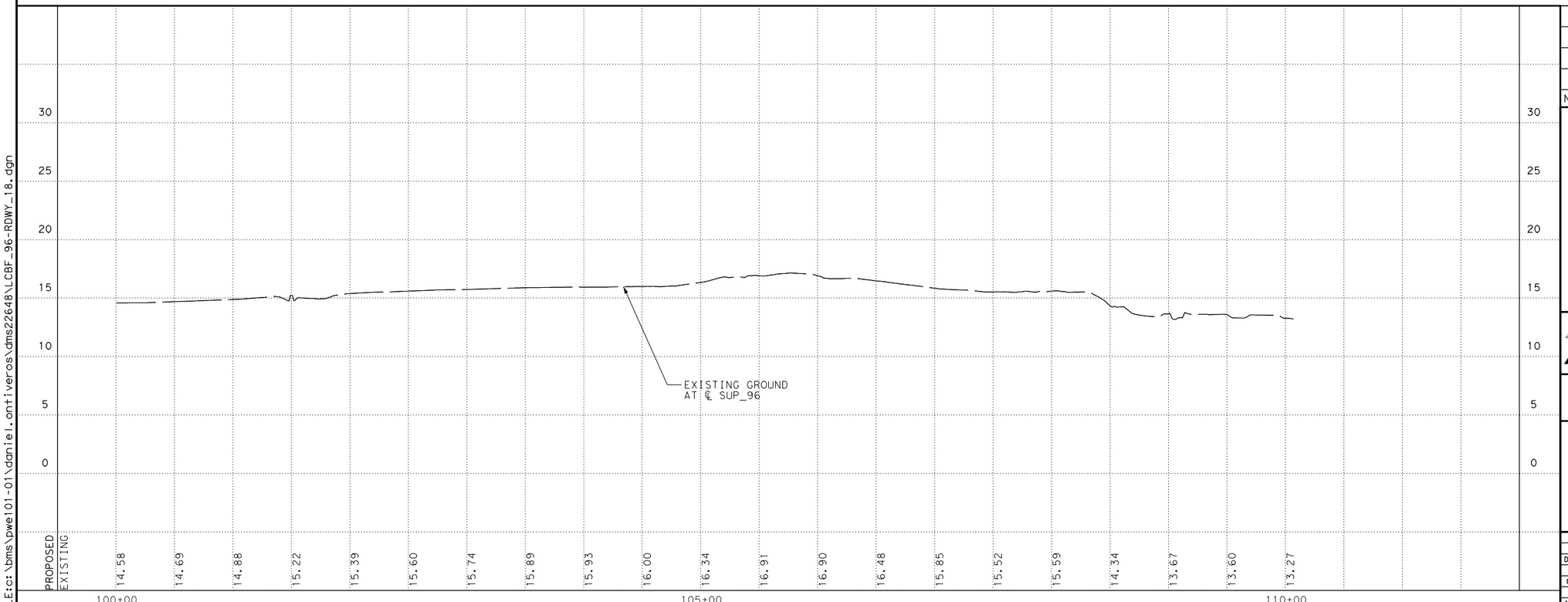

NO.	DATE	REVISION	APPROVED

STATE OF TEXAS
JOHANNA TORRES
130063
LICENSED PROFESSIONAL ENGINEER
johannatorres
8/2/2023

Texas Department of Transportation
©2023

JONES|CARTER
Texas Board of Professional Engineers Registration No. F-23290
4350 Lockhill Selma Rd, Suite 100• San Antonio, Texas 78249 •210.494.5511

SH 96, FM 270
SH 96
PLAN AND PROFILE
STA 305+00 TO STA 315+00

SHEET **18** OF **29**

DRAWN	FED. RD. DIV. NO.	FEDERAL AID PROJECT NO.		HIGHWAY NO.
AA	06			FM 270, ETC
DESIGNED	STATE	DIST.	COUNTY	SHEET NO.
JT	TEXAS	HOUSTON	GALVESTON	137
CHECKED	CONT.	SECT.	JOB	
NG	0912	73	215	
APPROVED				
DD				

PENTABLE:LCBF.tbl
PLOTDRIVER:LCBF.pltcfg
USER:do
2:55:24 AM
DATE:8/2/2023
FILE:c:\bms\pwe101-01\daniel.ontiveros\dms22648\LCBF_96-RDWY_18.dgn

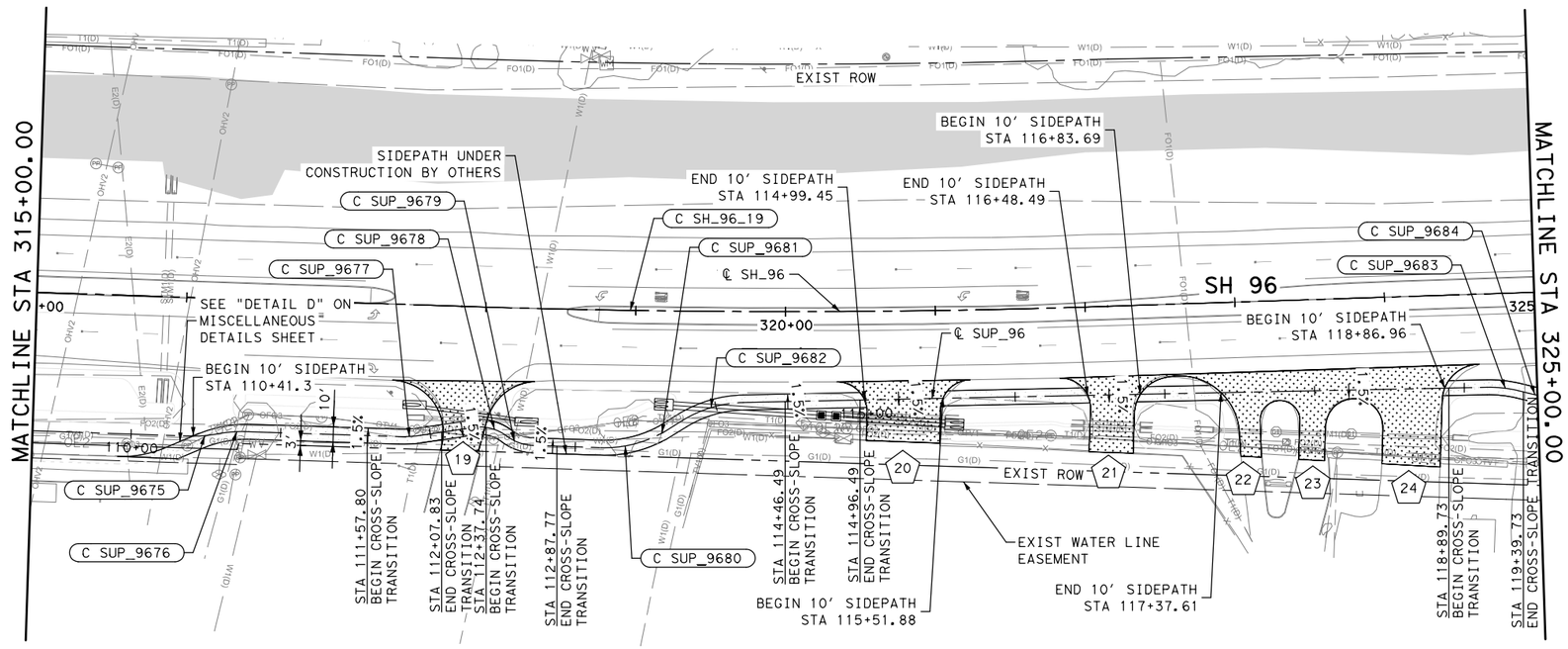

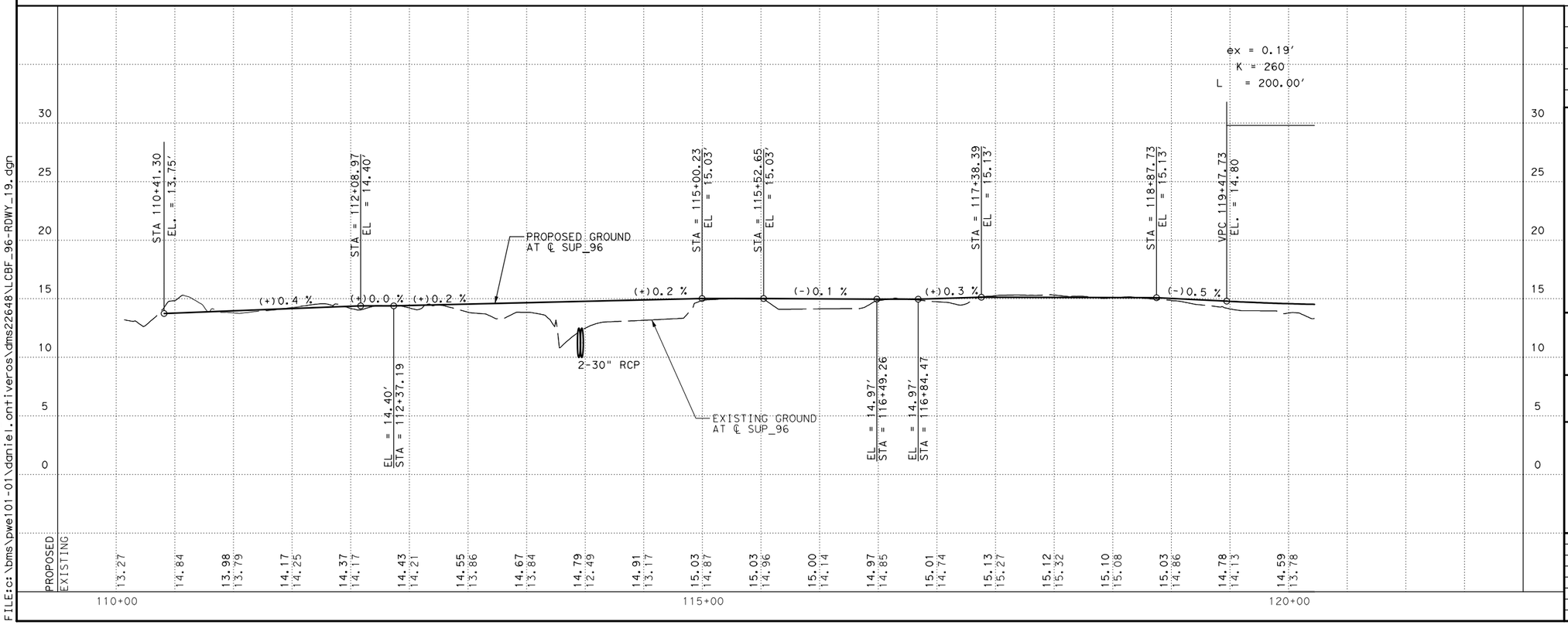

0' 25' 50' 100'

LEGEND:

- EXISTING DIRECTION OF TRAVEL
- DIRECTION OF TRAVEL
- EXISTING ROW
- SAWCUT LINE
- PROPOSED PEDESTRIAN HANDRAIL
- PROPOSED SIDEPATH
- PROPOSED WIDENING
- WETLAND
- PROPOSED ASPHALT DRIVEWAY
- PROPOSED CONCRETE DRIVEWAY
- (#) DRIVEWAY NUMBER
- (C_XXX_XXX) CURVE NUMBER

NOTE:

1. PLAN VIEW IS BASED ON ROADWAY BASELINE.
   PROFILE VIEW IS BASED ON SIDEPATH CENTERLINE.
2. REFER TO INTERSECTION LAYOUT FOR RAMP DETAILS.
3. LEAGUE CITY EASEMENT LOCATIONS ARE APPROXIMATE. CONTRACTOR TO VERIFY

NO.	DATE	REVISION	APPROVED

JOHANNA TORRES
130063
LICENSED PROFESSIONAL ENGINEER
STATE OF TEXAS
8/2/2023

Texas Department of Transportation
©2023

JONES|CARTER
Texas Board of Professional Engineers Registration No. F-23290
4350 Lockhill Selma Rd, Suite 100• San Antonio, Texas 78249 •210.494.5511

SH 96, FM 270
SH 96
PLAN AND PROFILE
STA 315+00 TO STA 325+00

SHEET **19** OF **29**

DRAWN	FED.RD. DIV.NO.	FEDERAL AID PROJECT NO.		HIGHWAY NO.
AA	06			FM 270,ETC
DESIGNED	STATE	DIST.	COUNTY	SHEET NO.
JT	TEXAS	HOUSTON	GALVESTON	
CHECKED	CONT.	SECT.	JOB	138
NG	0912	73	215	
APPROVED				
DD				

DATE:8/2/2023 2:55:27 AM USER:do
FILE:c:\bms\pwe101-01\daniel.ontiveros\dms22648\LCBF_96-RDWY_19.dgn
PLOTDRIVER: LCBF.pltcfg PENTABLE: LCBF.tbl

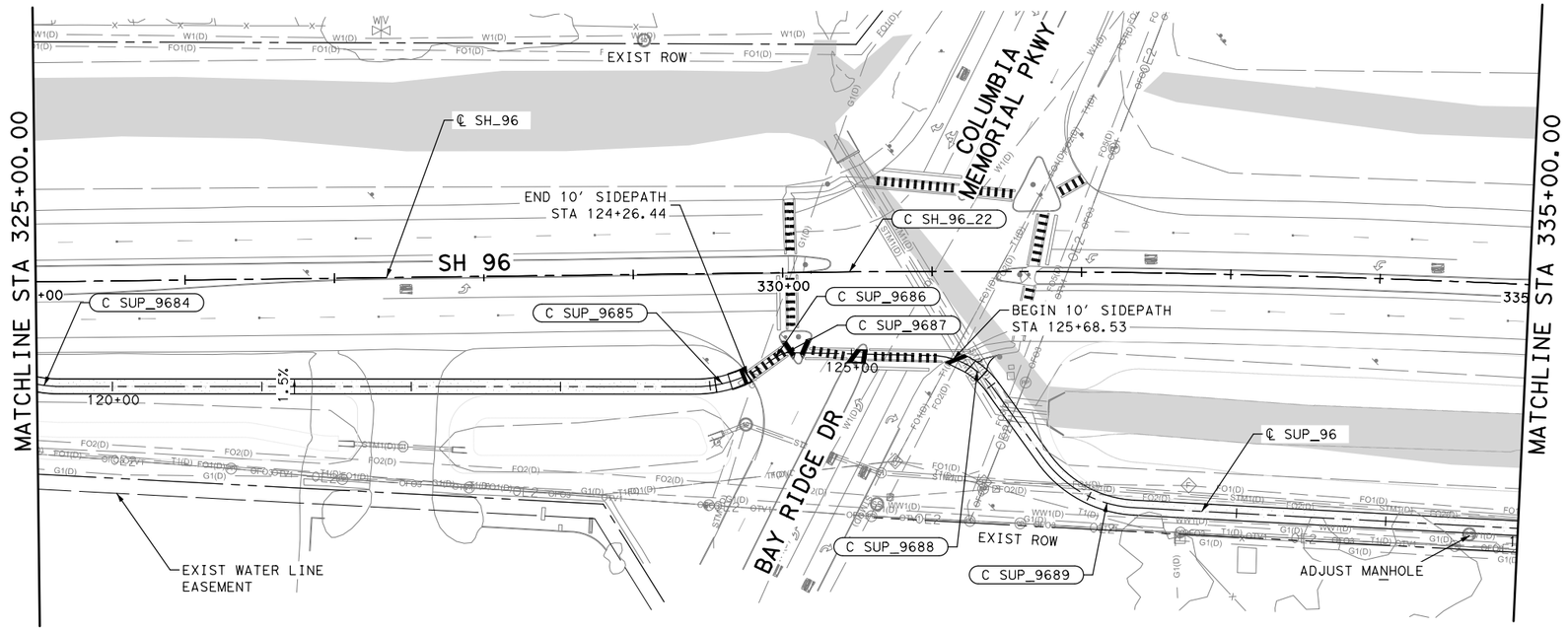

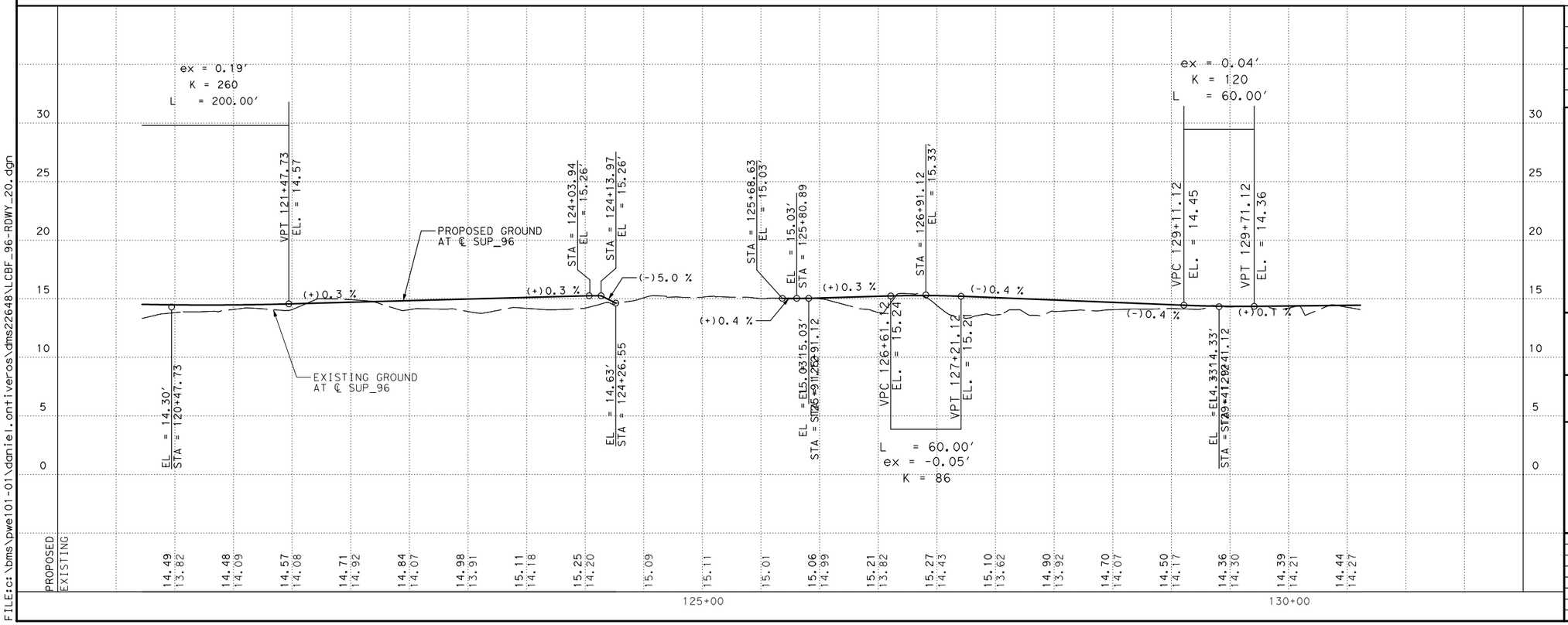

0' 25' 50' 100'

LEGEND:

- EXISTING DIRECTION OF TRAVEL
- DIRECTION OF TRAVEL
- EXISTING ROW
- SAWCUT LINE
- PROPOSED PEDESTRIAN HANDRAIL
- PROPOSED SIDEPATH
- PROPOSED WIDENING
- WETLAND
- PROPOSED ASPHALT DRIVEWAY
- PROPOSED CONCRETE DRIVEWAY
- # DRIVEWAY NUMBER
- C_XXX_XXX CURVE NUMBER

NOTE:

1. PLAN VIEW IS BASED ON ROADWAY BASELINE.
PROFILE VIEW IS BASED ON SIDEPATH CENTERLINE.
2. REFER TO INTERSECTION LAYOUT FOR RAMP DETAILS.
3. LEAGUE CITY EASEMENT LOCATIONS ARE APPROXIMATE. CONTRACTOR TO VERIFY

NO.	DATE	REVISION	APPROVED

STATE OF TEXAS
JOHANNA TORRES
130063
LICENSED PROFESSIONAL ENGINEER
johannatorres
8/2/2023

Texas Department of Transportation
©2023

JONES|CARTER
Texas Board of Professional Engineers Registration No. F-23290
4350 Lockhill Selma Rd, Suite 100• San Antonio, Texas 78249 •210.494.5511

SH 96, FM 270
SH 96
PLAN AND PROFILE
STA 325+00 TO STA 335+00

SHEET **20** OF **29**

DRAWN	FED. RD. DIV. NO.	FEDERAL AID PROJECT NO.		HIGHWAY NO.
AA	06			FM 270, ETC
DESIGNED	STATE	DIST.	COUNTY	SHEET NO.
JT	TEXAS	HOUSTON	GALVESTON	139
CHECKED	CONT.	SECT.	JOB	
NG	0912	73	215	
APPROVED				
DD				

PENTABLE:LCBF.tbl
PLOTDRIVER:LCBF.pltcfg
DATE:8/2/2023 2:55:31 AM USER:do
FILE:c:\bms\pwe101-01\daniel.ontiveros\dms22648\LCBF_96-RDWY_20.dgn

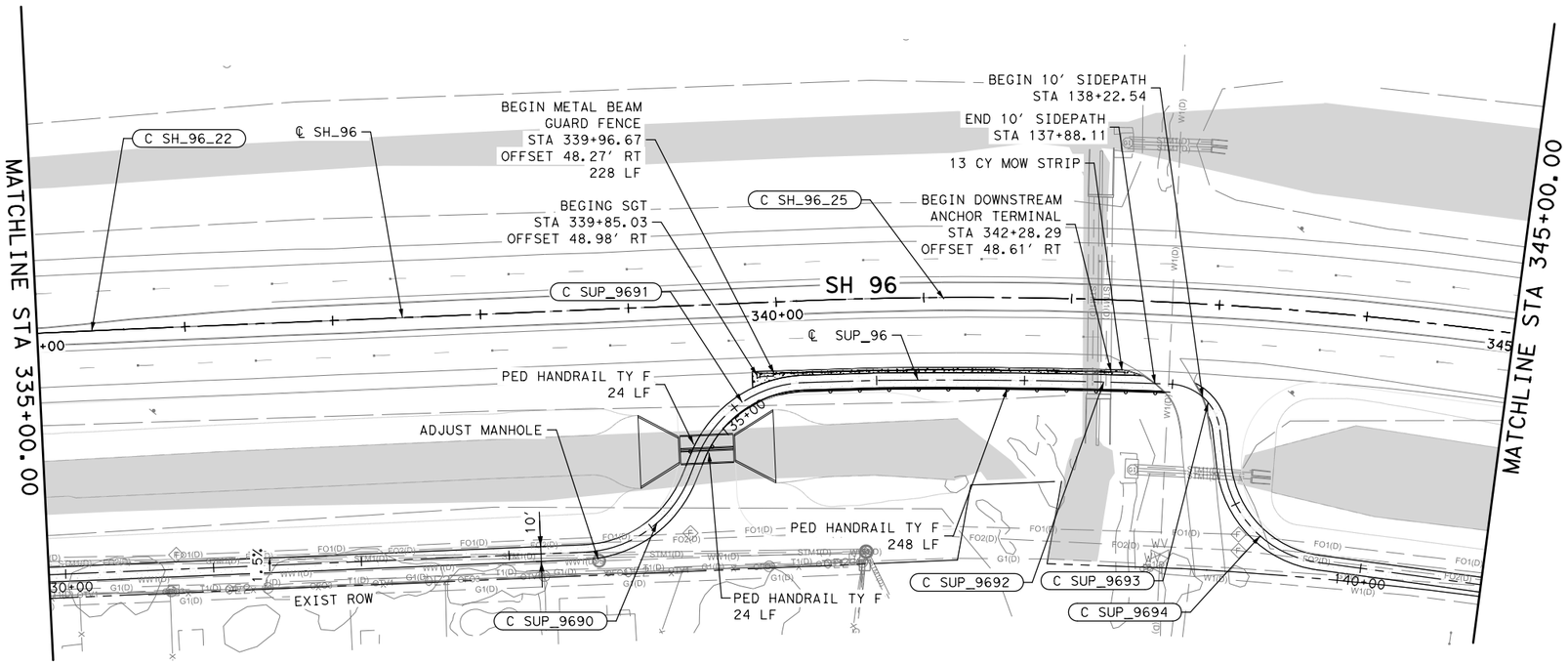

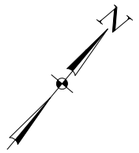

0' 25' 50' 100'

LEGEND:

- EXISTING DIRECTION OF TRAVEL
- DIRECTION OF TRAVEL
- EXISTING ROW
- SAWCUT LINE
- PROPOSED PEDESTRIAN HANDRAIL
- PROPOSED SIDEPATH
- PROPOSED WIDENING
- WETLAND
- PROPOSED ASPHALT DRIVEWAY
- PROPOSED CONCRETE DRIVEWAY
- # DRIVEWAY NUMBER
- C_XXX_XXX CURVE NUMBER

NOTE:

1. PLAN VIEW IS BASED ON ROADWAY BASELINE.
PROFILE VIEW IS BASED ON SIDEPATH CENTERLINE.
2. REFER TO INTERSECTION LAYOUT FOR RAMP DETAILS.
3. LEAGUE CITY EASEMENT LOCATIONS ARE APPROXIMATE. CONTRACTOR TO VERIFY

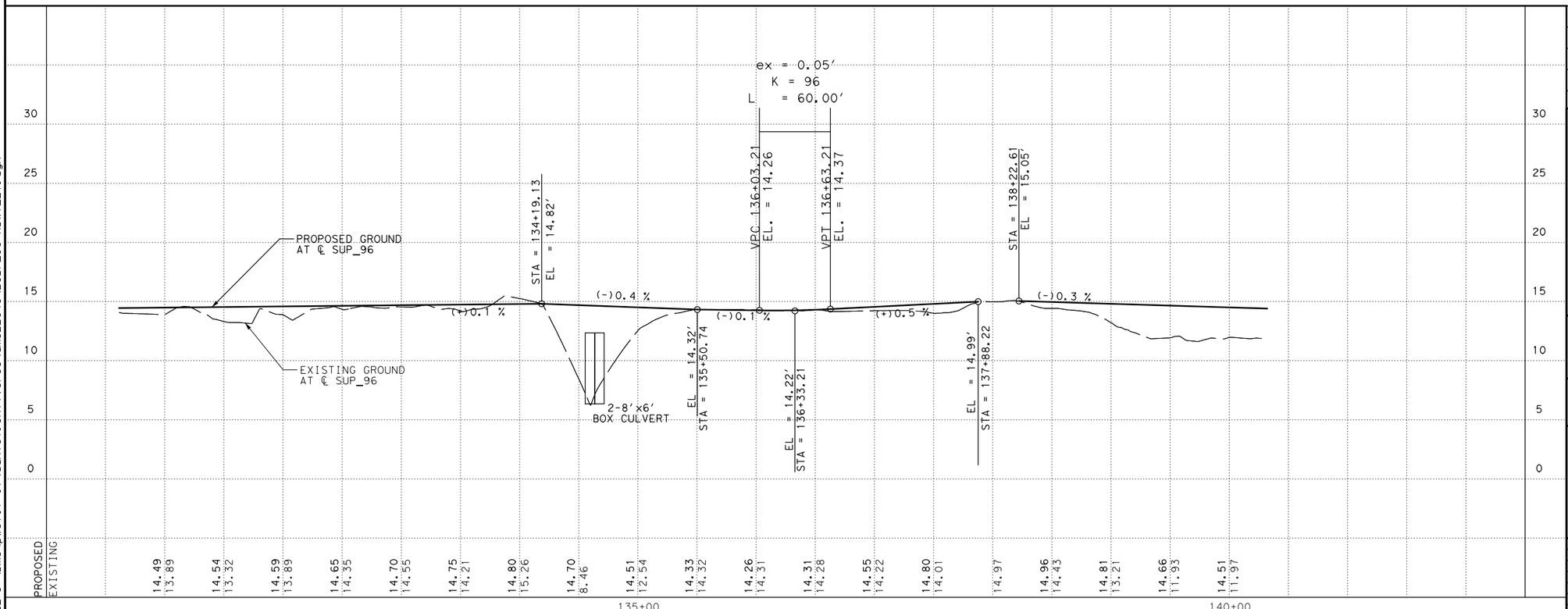

NO.	DATE	REVISION	APPROVED

STATE OF TEXAS
JOHANNA TORRES
130063
LICENSED PROFESSIONAL ENGINEER
johannatorres
8/2/2023

Texas Department of Transportation
©2023

JONES|CARTER
Texas Board of Professional Engineers Registration No. F-23290
4350 Lockhill Selma Rd, Suite 100• San Antonio, Texas 78249 •210.494.5511

SH 96, FM 270
SH 96
PLAN AND PROFILE
STA 335+00 TO STA 345+00

SHEET **21** OF **29**

DRAWN	FED.RD. DIV.NO.	FEDERAL AID PROJECT NO.		HIGHWAY NO.
AA	06			FM 270, ETC
DESIGNED	STATE	DIST.	COUNTY	SHEET NO.
JT	TEXAS	HOUSTON	GALVESTON	140
CHECKED	CONT.	SECT.	JOB	
NG	0912	73	215	
APPROVED				
DD				

PENTABLE:LCBF.tbl
PLOTDRIVER:LCBF.pltcfg
DATE:8/2/2023 2:55:34 AM USER:do
FILE:c:\bms\pwe101-01\daniel.ontiveros\dms22648\LCBF_96-RDWY_21.dgn

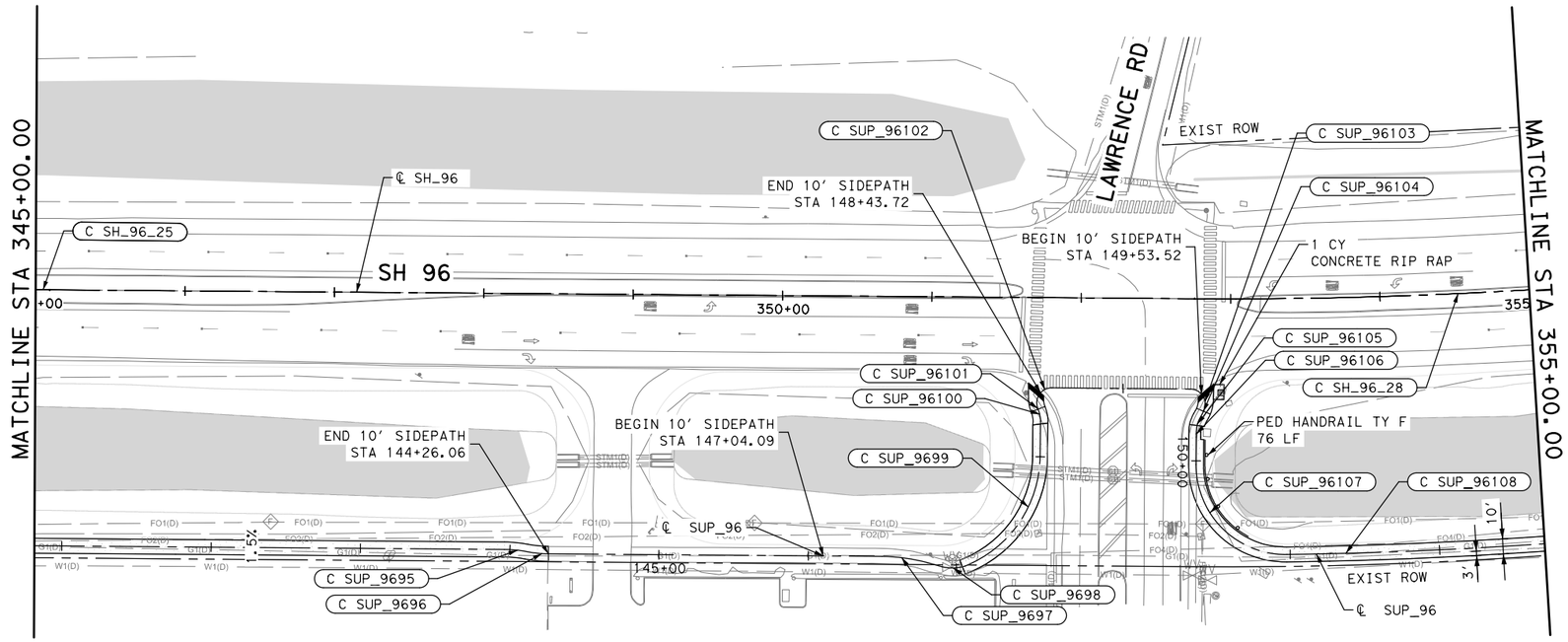

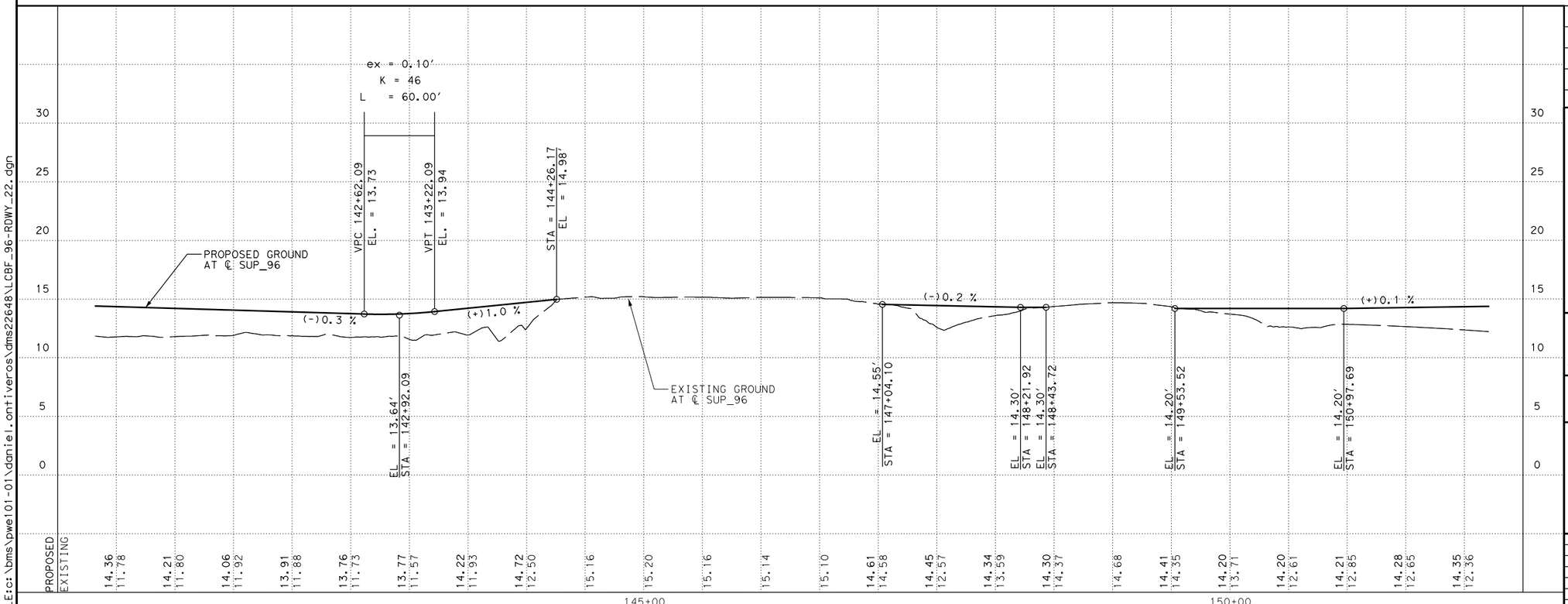

0' 25' 50' 100'

LEGEND:

- EXISTING DIRECTION OF TRAVEL
- DIRECTION OF TRAVEL
- EXISTING ROW
- SAWCUT LINE
- PROPOSED PEDESTRIAN HANDRAIL
- PROPOSED SIDEPATH
- PROPOSED WIDENING
- WETLAND
- PROPOSED ASPHALT DRIVEWAY
- PROPOSED CONCRETE DRIVEWAY
- # DRIVEWAY NUMBER
- C_XXX_XXX CURVE NUMBER

NOTE:

1. PLAN VIEW IS BASED ON ROADWAY BASELINE.
   PROFILE VIEW IS BASED ON SIDEPATH CENTERLINE.
2. REFER TO INTERSECTION LAYOUT FOR RAMP DETAILS.
3. LEAGUE CITY EASEMENT LOCATIONS ARE APPROXIMATE. CONTRACTOR TO VERIFY

NO.	DATE	REVISION	APPROVED

JOHANNA TORRES
130063
LICENSED PROFESSIONAL ENGINEER
STATE OF TEXAS
johannatorres
8/2/2023

Texas Department of Transportation ©2023

JONES|CARTER
Texas Board of Professional Engineers Registration No. F-23290
4350 Lockhill Selma Rd, Suite 100•San Antonio, Texas 78249•210.494.5511

SH 96, FM 270
SH 96
PLAN AND PROFILE
STA 345+00 TO STA 355+00

SHEET **22** OF **29**

DRAWN	FED.RD. DIV.NO.	FEDERAL AID PROJECT NO.		HIGHWAY NO.
AA	06			FM 270,ETC
DESIGNED	STATE	DIST.	COUNTY	SHEET NO.
JT	TEXAS	HOUSTON	GALVESTON	141
CHECKED	CONT.	SECT.	JOB	
NG	0912	73	215	
APPROVED				
DD				

PENTABLE:LCBF.tbl
PLOTDRIVER:LCBF.pltcfg
DATE:8/2/2023 2:55:38 AM USER:do
FILE:c:\bms\pwe101-01\daniel.ontiveros\dms22648\LCBF_96-RDWY_22.dgn

PENTABLE:LCBF.tbl
PLOTDRIVER:LCBF.pltcfg
DATE:8/2/2023 2:55:42 AM USER:do
FILE:c:\bms\pwe101-01\daniel.ontiveros\dms22648\LCBF_96-RDWY_23.dgn

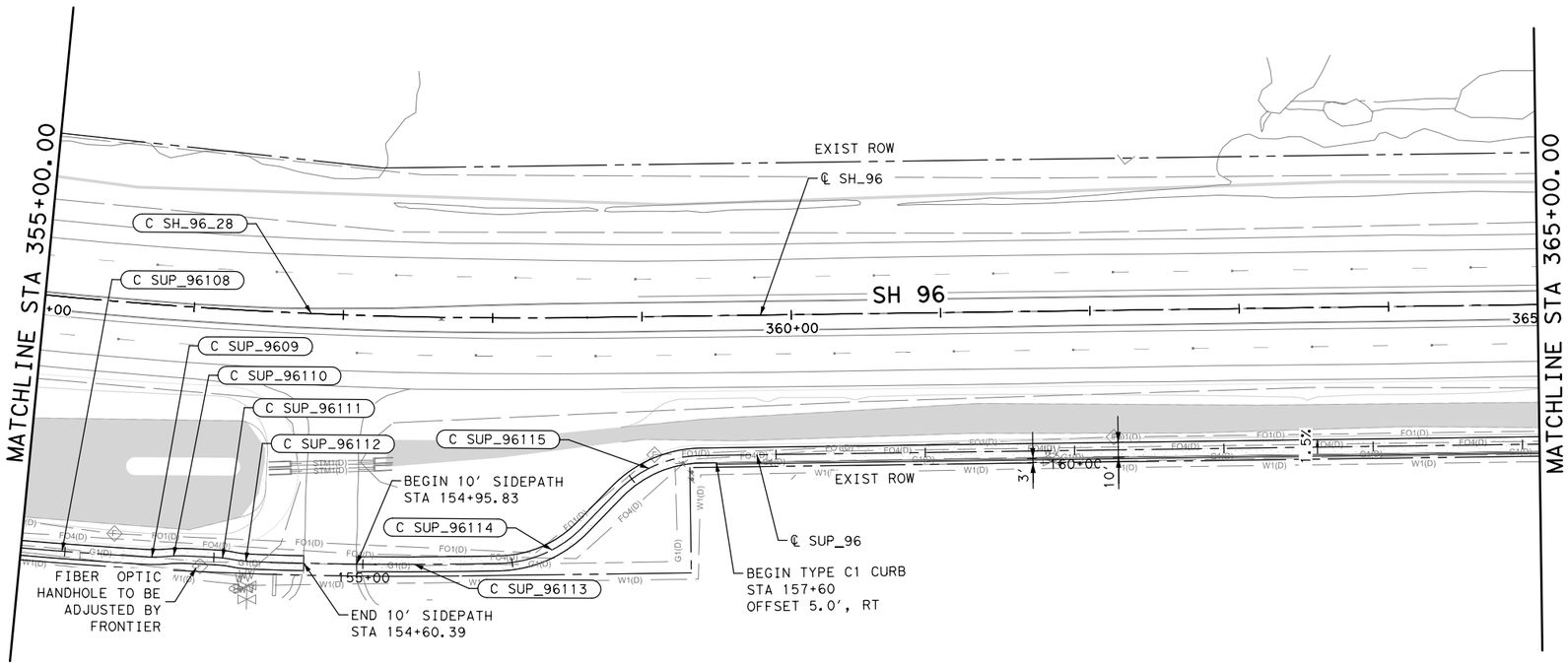

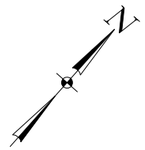

0' 25' 50' 100'

LEGEND:

- EXISTING DIRECTION OF TRAVEL
- DIRECTION OF TRAVEL
- EXISTING ROW
- SAWCUT LINE
- PROPOSED PEDESTRIAN HANDRAIL
- PROPOSED SIDEPATH
- PROPOSED WIDENING
- WETLAND
- PROPOSED ASPHALT DRIVEWAY
- PROPOSED CONCRETE DRIVEWAY
- # DRIVEWAY NUMBER
- C_XXX_XXX CURVE NUMBER

NOTE:

1. PLAN VIEW IS BASED ON ROADWAY BASELINE.
PROFILE VIEW IS BASED ON SIDEPATH CENTERLINE.
2. REFER TO INTERSECTION LAYOUT FOR RAMP DETAILS.
3. LEAGUE CITY EASEMENT LOCATIONS ARE APPROXIMATE. CONTRACTOR TO VERIFY

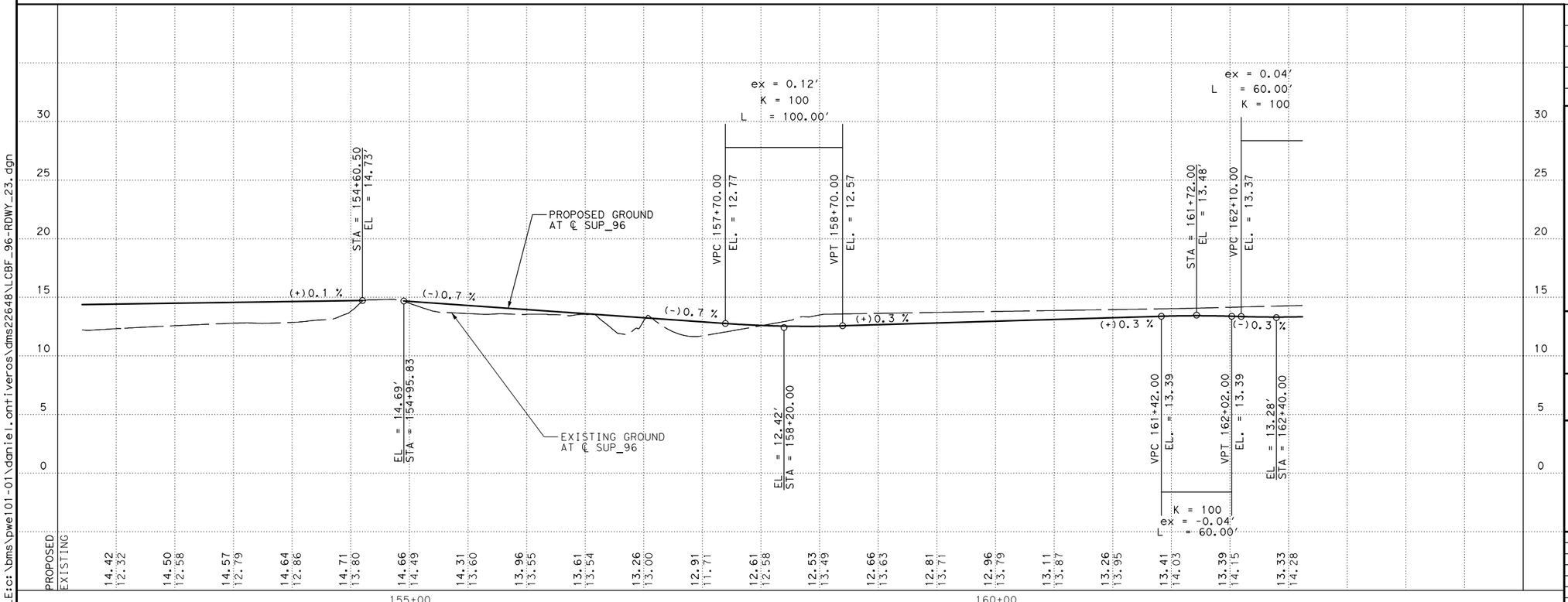

NO.	DATE	REVISION	APPROVED

STATE OF TEXAS
JOHANNA TORRES
130063
LICENSED PROFESSIONAL ENGINEER
johannatorres
8/2/2023

Texas Department of Transportation
©2023

JONES|CARTER
Texas Board of Professional Engineers Registration No. F-23290
4350 Lockhill Selma Rd, Suite 100• San Antonio, Texas 78249 •210.494.5511

SH 96, FM 270
SH 96
PLAN AND PROFILE
STA 355+00 TO STA 365+00

SHEET **23** OF **29**

DRAWN	FED.RD. DIV.NO.	FEDERAL AID PROJECT NO.		HIGHWAY NO.
AA	06			FM 270,ETC
DESIGNED	STATE	DIST.	COUNTY	SHEET NO.
JT	TEXAS	HOUSTON	GALVESTON	142
CHECKED	CONT.	SECT.	JOB	
NG	0912	73	215	
APPROVED				
DD				

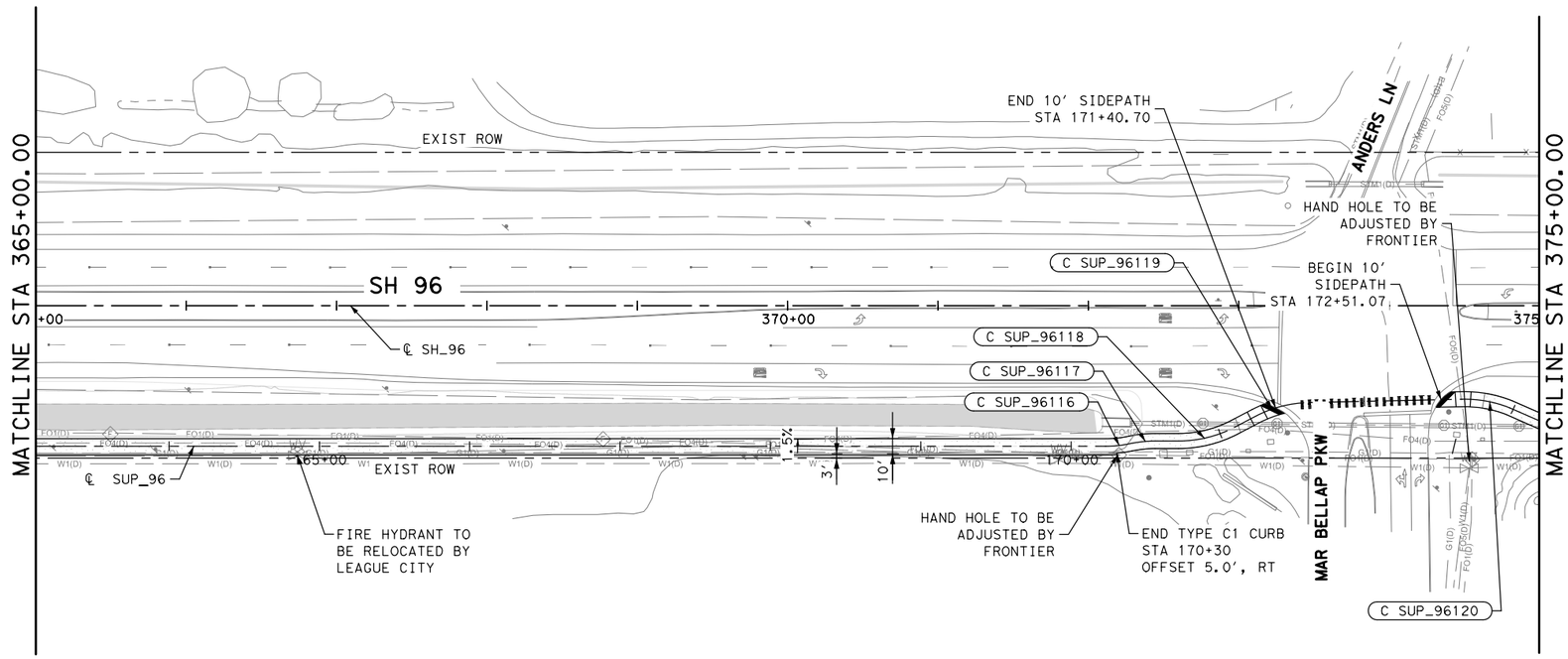

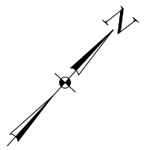

0' 25' 50' 100'

LEGEND:

- EXISTING DIRECTION OF TRAVEL
- DIRECTION OF TRAVEL
- EXISTING ROW
- SAWCUT LINE
- PROPOSED PEDESTRIAN HANDRAIL
- PROPOSED SIDEPATH
- PROPOSED WIDENING
- WETLAND
- PROPOSED ASPHALT DRIVEWAY
- PROPOSED CONCRETE DRIVEWAY
- # DRIVEWAY NUMBER
- C_XXX_XXX CURVE NUMBER

NOTE:

1. PLAN VIEW IS BASED ON ROADWAY BASELINE.
   PROFILE VIEW IS BASED ON SIDEPATH CENTERLINE.
2. REFER TO INTERSECTION LAYOUT FOR RAMP DETAILS.
3. LEAGUE CITY EASEMENT LOCATIONS ARE APPROXIMATE. CONTRACTOR TO VERIFY

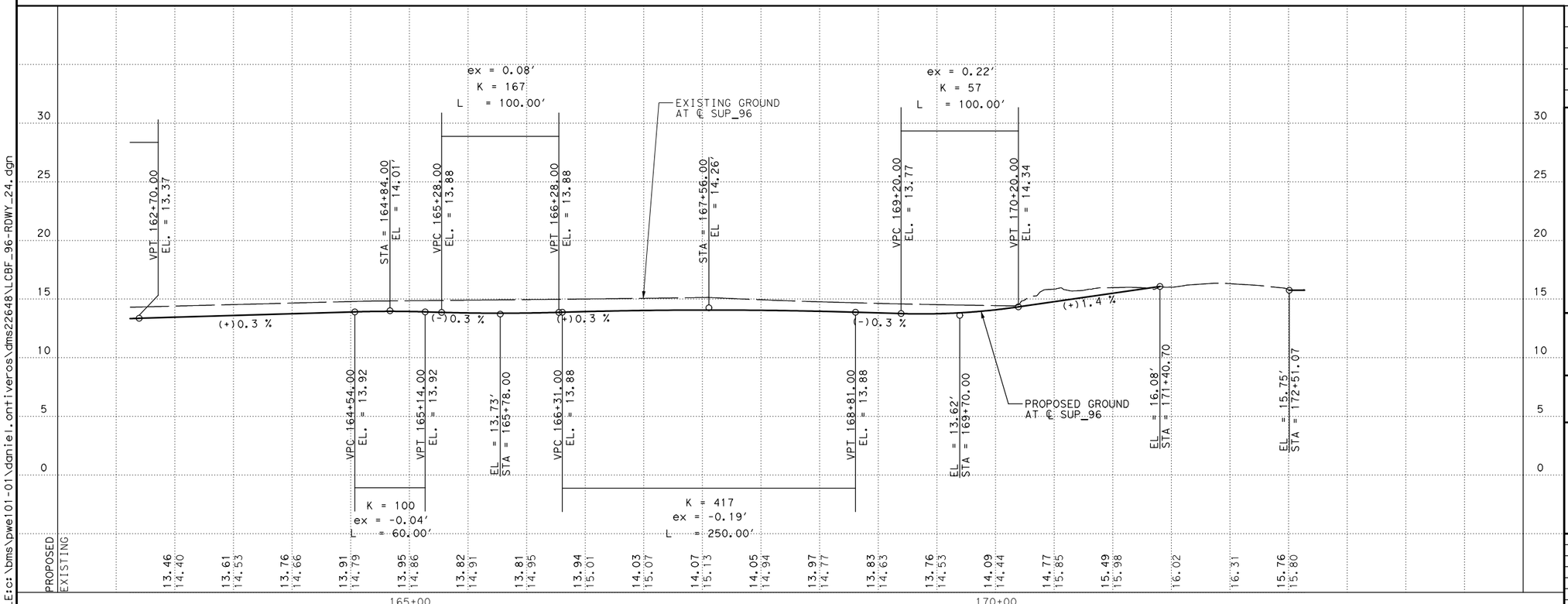

NO.	DATE	REVISION	APPROVED

JOHANNA TORRES
130063
LICENSED PROFESSIONAL ENGINEER
STATE OF TEXAS
johannatorres
8/2/2023

Texas Department of Transportation
©2023

JONES|CARTER
Texas Board of Professional Engineers Registration No. F-23290
4350 Lockhill Selma Rd, Suite 100• San Antonio, Texas 78249 •210.494.5511

SH 96, FM 270
SH 96
PLAN AND PROFILE
STA 365+00 TO STA 375+00

SHEET **24** OF **29**

DRAWN	FED.RD. DIV.NO.	FEDERAL AID PROJECT NO.		HIGHWAY NO.
AA	06			FM 270,ETC
DESIGNED	STATE	DIST.	COUNTY	SHEET NO.
JT	TEXAS	HOUSTON	GALVESTON	
CHECKED	CONT.	SECT.	JOB	143
NG	0912	73	215	
APPROVED				
DD				

PENTABLE:LCBF.tbl
PLOTDRIVER:LCBF.pltcfg
DATE:8/2/2023 2:55:48 AM USER:do
FILE:c:\bms\pwe101-01\daniel.ontiveros\dms22648\LCBF_96-RDWY_24.dgn

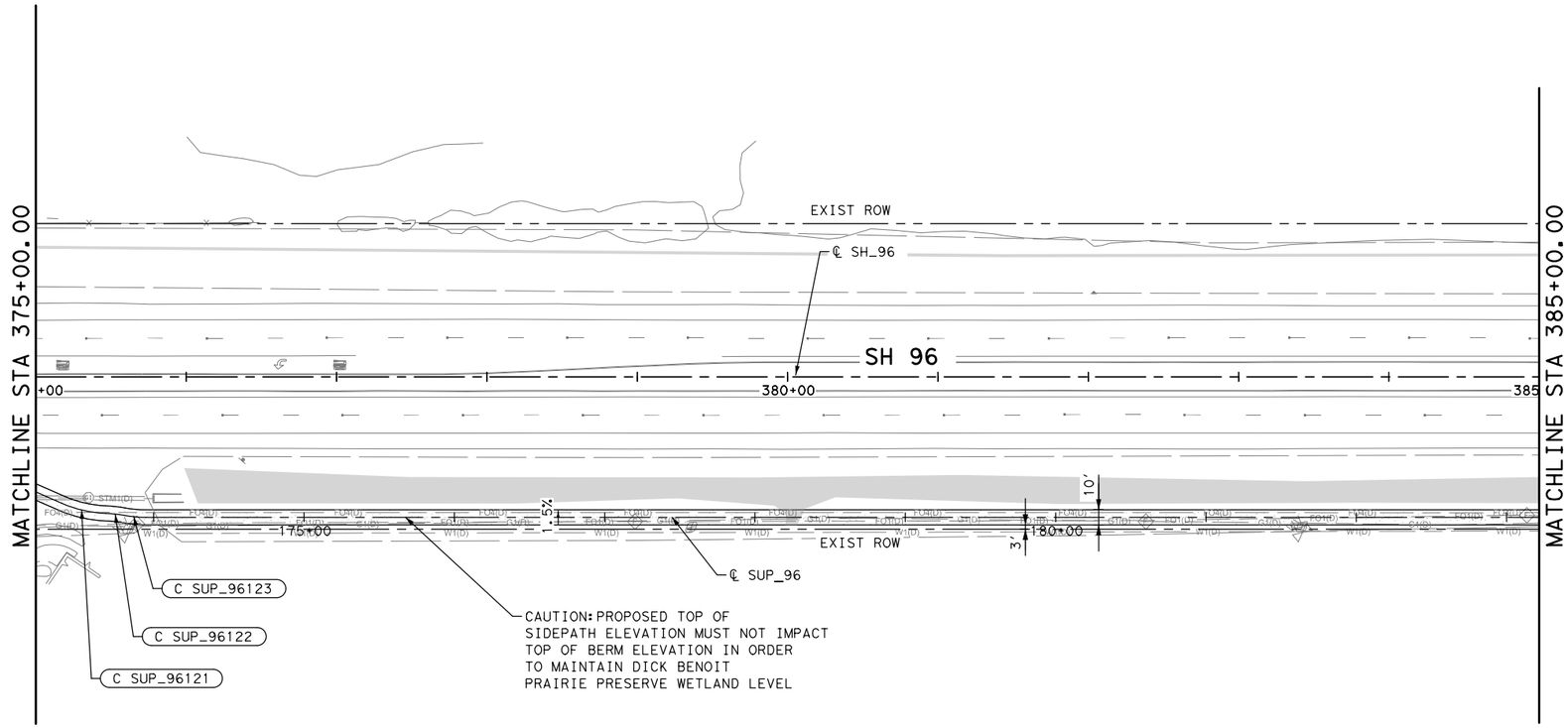

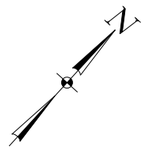

0' 25' 50' 100'

LEGEND:

- EXISTING DIRECTION OF TRAVEL
- DIRECTION OF TRAVEL
- EXISTING ROW
- SAWCUT LINE
- PROPOSED PEDESTRIAN HANDRAIL
- PROPOSED SIDEPATH
- PROPOSED WIDENING
- WETLAND
- PROPOSED ASPHALT DRIVEWAY
- PROPOSED CONCRETE DRIVEWAY
- # DRIVEWAY NUMBER
- C_XXX_XXX CURVE NUMBER

NOTE:

1. PLAN VIEW IS BASED ON ROADWAY BASELINE.
PROFILE VIEW IS BASED ON SIDEPATH CENTERLINE.
2. REFER TO INTERSECTION LAYOUT FOR RAMP DETAILS.
3. LEAGUE CITY EASEMENT LOCATIONS ARE APPROXIMATE. CONTRACTOR TO VERIFY

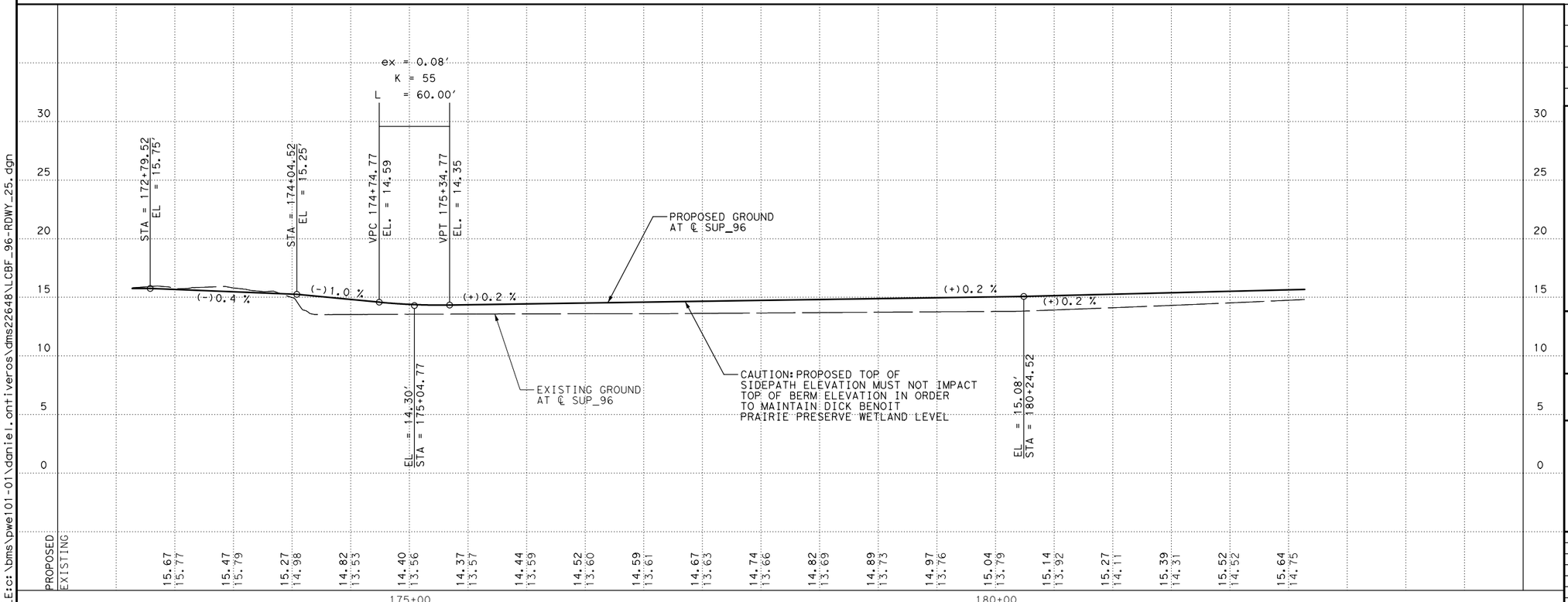

NO.	DATE	REVISION	APPROVED

STATE OF TEXAS
JOHANNA TORRES
130063
LICENSED PROFESSIONAL ENGINEER
johannatorres
8/2/2023

Texas Department of Transportation
©2023

JONES|CARTER
Texas Board of Professional Engineers Registration No. F-23290
4350 Lockhill Selma Rd, Suite 100• San Antonio, Texas 78249 •210.494.5511

SH 96, FM 270
SH 96
PLAN AND PROFILE
STA 375+00 TO STA 385+00

SHEET **25** OF **29**

DRAWN	FED. RD. DIV. NO.	FEDERAL AID PROJECT NO.		HIGHWAY NO.
AA	06			FM 270, ETC
DESIGNED	STATE	DIST.	COUNTY	SHEET NO.
JT	TEXAS	HOUSTON	GALVESTON	
CHECKED	CONT.	SECT.	JOB	144
NG	0912	73	215	
APPROVED				
DD				

PENTABLE:LCBF.tbl
PLOTDRIVER:LCBF.pltcfg
DATE:8/2/2023 2:55:51 AM USER:do
FILE:c:\bms\pwe101-01\daniel.ontiveros\dms22648\LCBF_96-RDWY_25.dgn

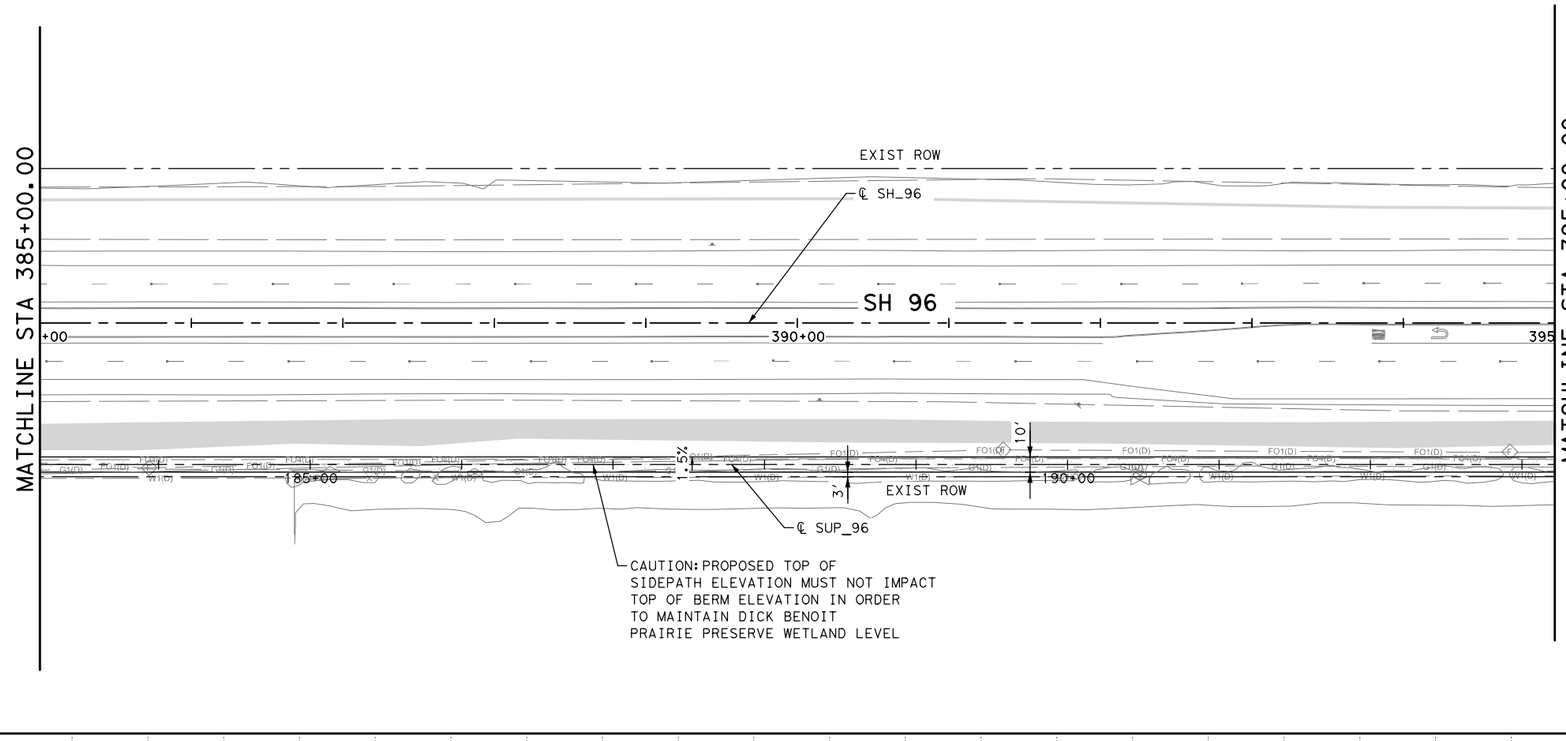

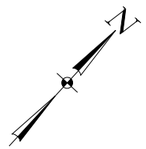

0' 25' 50' 100'

LEGEND:

- EXISTING DIRECTION OF TRAVEL
- DIRECTION OF TRAVEL
- EXISTING ROW
- SAWCUT LINE
- PROPOSED PEDESTRIAN HANDRAIL
- PROPOSED SIDEPATH
- PROPOSED WIDENING
- WETLAND
- PROPOSED ASPHALT DRIVEWAY
- PROPOSED CONCRETE DRIVEWAY
- # DRIVEWAY NUMBER
- C_XXX_XXX CURVE NUMBER

NOTE:

1. PLAN VIEW IS BASED ON ROADWAY BASELINE.
PROFILE VIEW IS BASED ON SIDEPATH CENTERLINE.
2. REFER TO INTERSECTION LAYOUT FOR RAMP DETAILS.
3. LEAGUE CITY EASEMENT LOCATIONS ARE APPROXIMATE. CONTRACTOR TO VERIFY

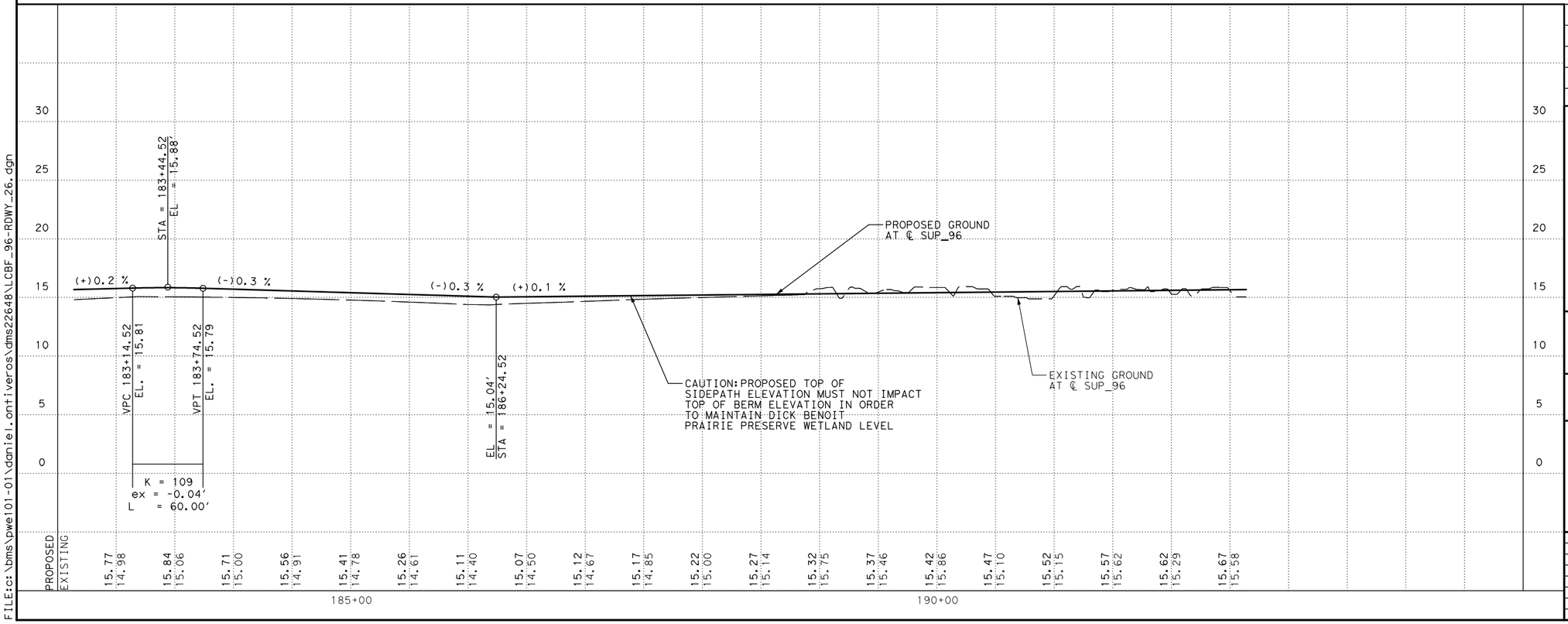

NO.	DATE	REVISION	APPROVED

STATE OF TEXAS
JOHANNA TORRES
130063
LICENSED PROFESSIONAL ENGINEER
johannatorres
8/2/2023

Texas Department of Transportation
©2023

JONES|CARTER
Texas Board of Professional Engineers Registration No. F-23290
4350 Lockhill Selma Rd, Suite 100• San Antonio, Texas 78249 •210.494.5511

SH 96, FM 270
SH 96
PLAN AND PROFILE
STA 385+00 TO STA 395+00

SHEET **26** OF **29**

DRAWN	FED. RD. DIV. NO.	FEDERAL AID PROJECT NO.		HIGHWAY NO.
AA	06			FM 270, ETC
DESIGNED	STATE	DIST.	COUNTY	SHEET NO.
JT	TEXAS	HOUSTON	GALVESTON	145
CHECKED	CONT.	SECT.	JOB	
NG	0912	73	215	
APPROVED				
DD				

PENTABLE: LCBF.tbl
PLOTDRIVER: LCBF.pltcfg
USER: do
2:55:55 AM
DATE: 8/2/2023
FILE: c:\bms\pwe101-01\daniel.ontiveros\dms22648\LCBF_96-RDWY_26.dgn

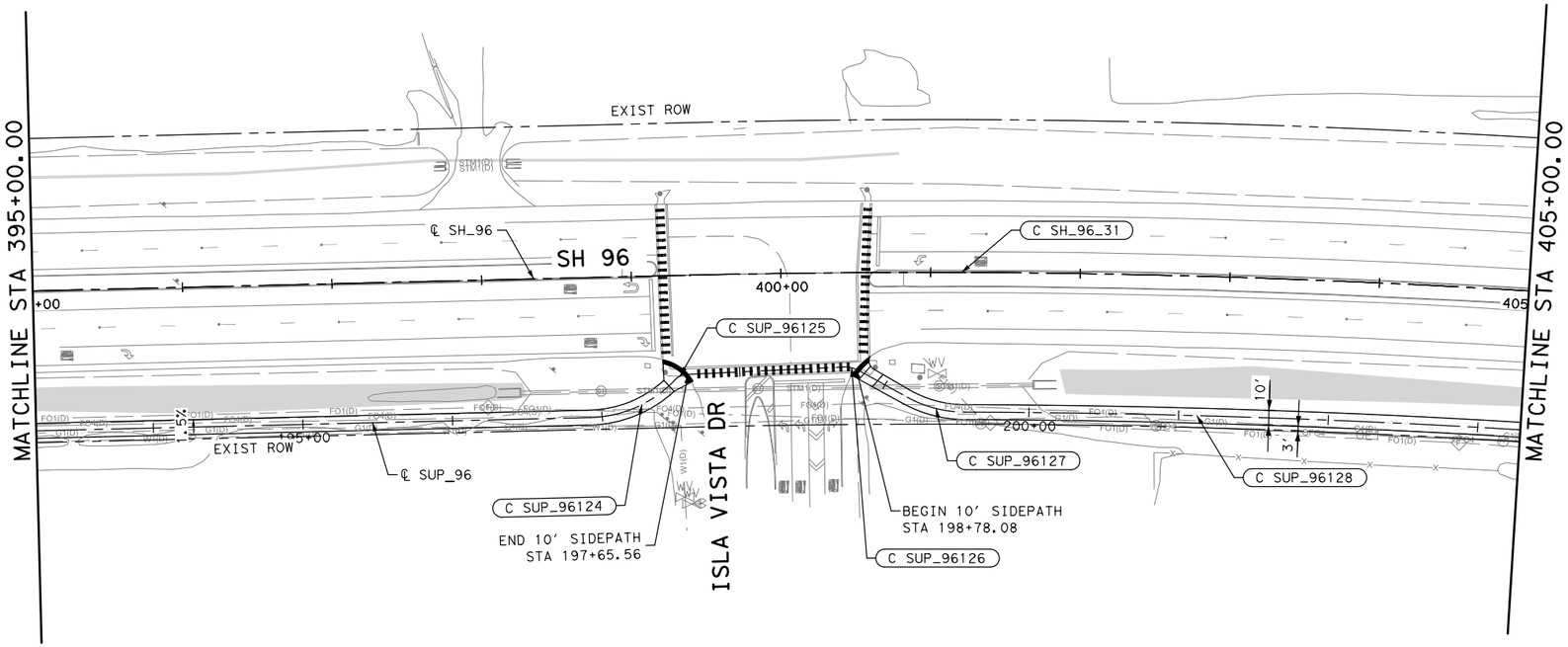

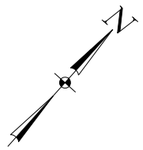

0' 25' 50' 100'

LEGEND:

- EXISTING DIRECTION OF TRAVEL
- DIRECTION OF TRAVEL
- EXISTING ROW
- SAWCUT LINE
- PROPOSED PEDESTRIAN HANDRAIL
- PROPOSED SIDEPATH
- PROPOSED WIDENING
- WETLAND
- PROPOSED ASPHALT DRIVEWAY
- PROPOSED CONCRETE DRIVEWAY
- # DRIVEWAY NUMBER
- C_XXX_XXX CURVE NUMBER

NOTE:

1. PLAN VIEW IS BASED ON ROADWAY BASELINE.
   PROFILE VIEW IS BASED ON SIDEPATH CENTERLINE.
2. REFER TO INTERSECTION LAYOUT FOR RAMP DETAILS.
3. LEAGUE CITY EASEMENT LOCATIONS ARE APPROXIMATE. CONTRACTOR TO VERIFY

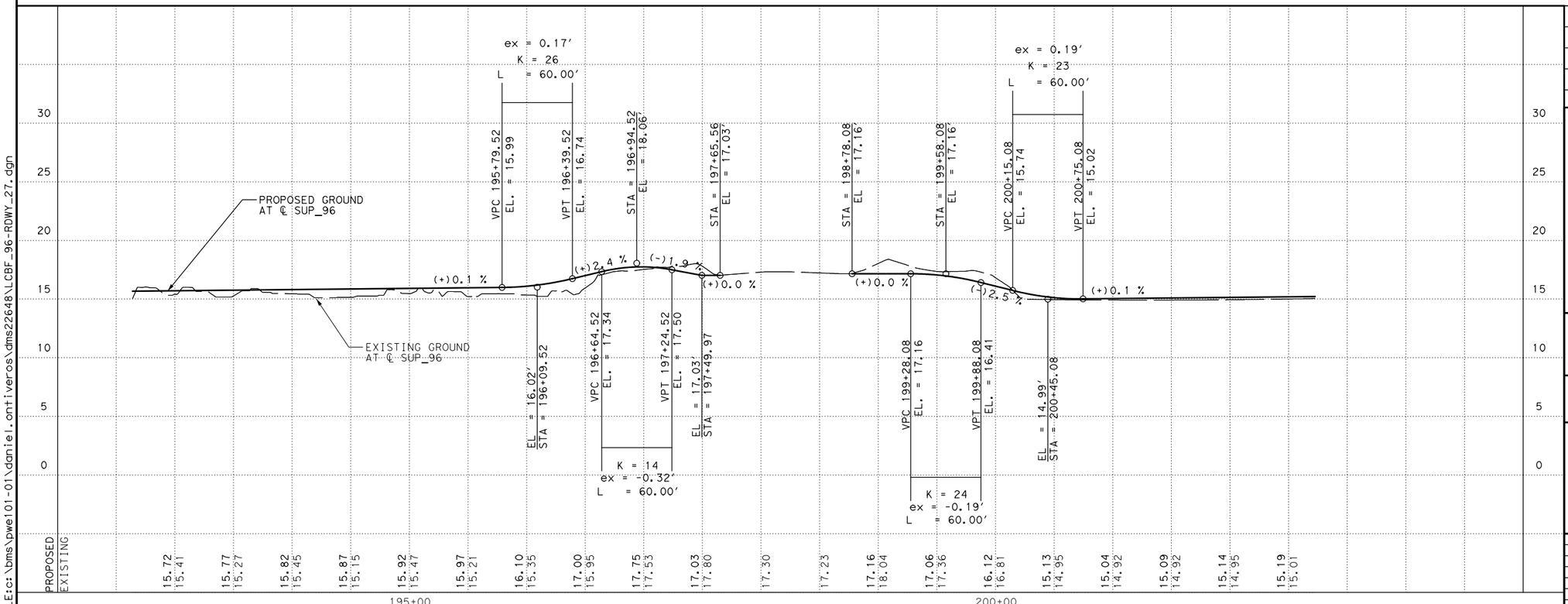

NO.	DATE	REVISION	APPROVED

STATE OF TEXAS
JOHANNA TORRES
130063
LICENSED PROFESSIONAL ENGINEER
johannatorres
8/2/2023

Texas Department of Transportation ©2023

JONES|CARTER
Texas Board of Professional Engineers Registration No. F-23290
4350 Lockhill Selma Rd, Suite 100• San Antonio, Texas 78249 •210.494.5511

SH 96, FM 270
SH 96
PLAN AND PROFILE
STA 395+00 TO STA 405+00

SHEET **27** OF **29**

DRAWN	FED.RD. DIV.NO.	FEDERAL AID PROJECT NO.		HIGHWAY NO.
AA	06			FM 270,ETC
DESIGNED	STATE	DIST.	COUNTY	SHEET NO.
JT	TEXAS	HOUSTON	GALVESTON	
CHECKED	CONT.	SECT.	JOB	146
NG	0912	73	215	
APPROVED				
DD				

PENTABLE:LCBF.tbl
PLOTDRIVER:LCBF.pltcfg
DATE:8/2/2023 2:55:59 AM USER:do
FILE:c:\bms\pwe101-01\daniel.ontiveros\dms22648\LCBF_96-RDWY_27.dgn

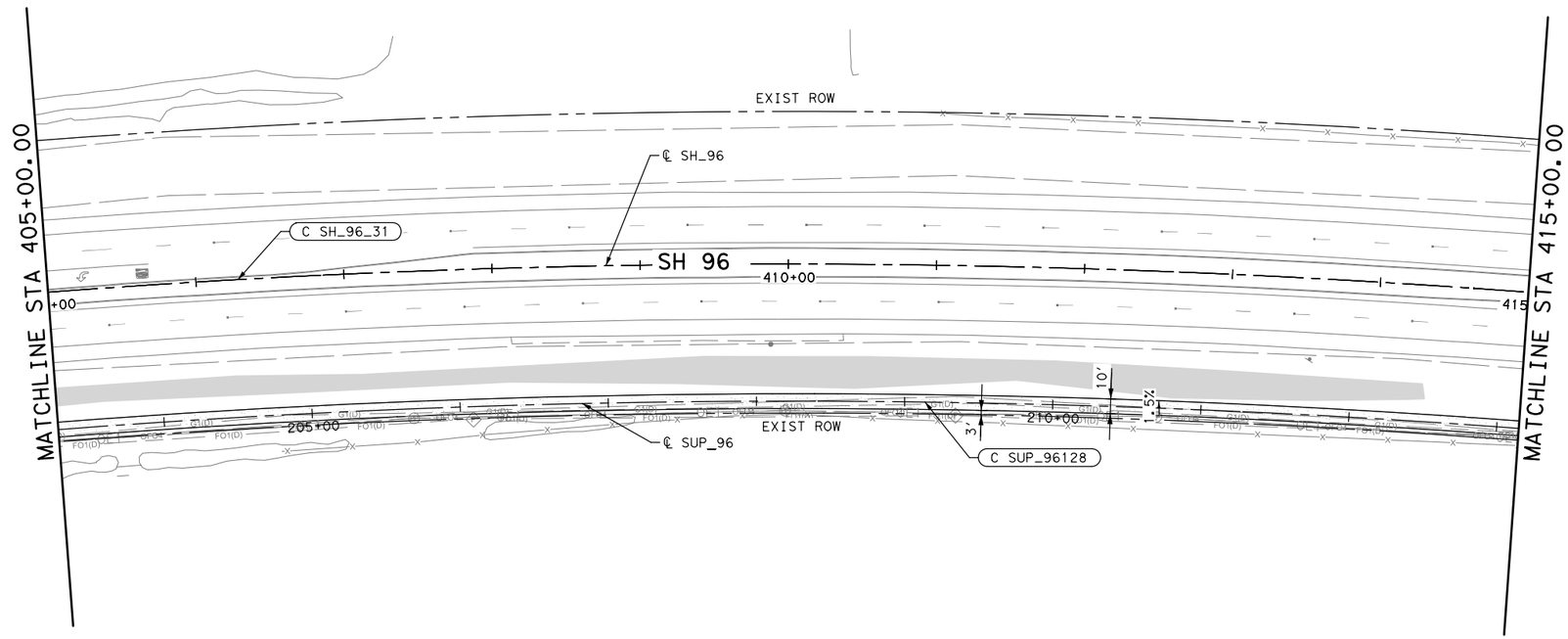

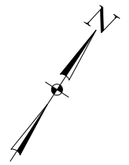

0' 25' 50' 100'

LEGEND:

- EXISTING DIRECTION OF TRAVEL
- DIRECTION OF TRAVEL
- EXISTING ROW
- SAWCUT LINE
- PROPOSED PEDESTRIAN HANDRAIL
- PROPOSED SIDEPATH
- PROPOSED WIDENING
- WETLAND
- PROPOSED ASPHALT DRIVEWAY
- PROPOSED CONCRETE DRIVEWAY
- # DRIVEWAY NUMBER
- C_XXX_XXX CURVE NUMBER

NOTE:

1. PLAN VIEW IS BASED ON ROADWAY BASELINE.
PROFILE VIEW IS BASED ON SIDEPATH CENTERLINE.
2. REFER TO INTERSECTION LAYOUT FOR RAMP DETAILS.
3. LEAGUE CITY EASEMENT LOCATIONS ARE APPROXIMATE. CONTRACTOR TO VERIFY

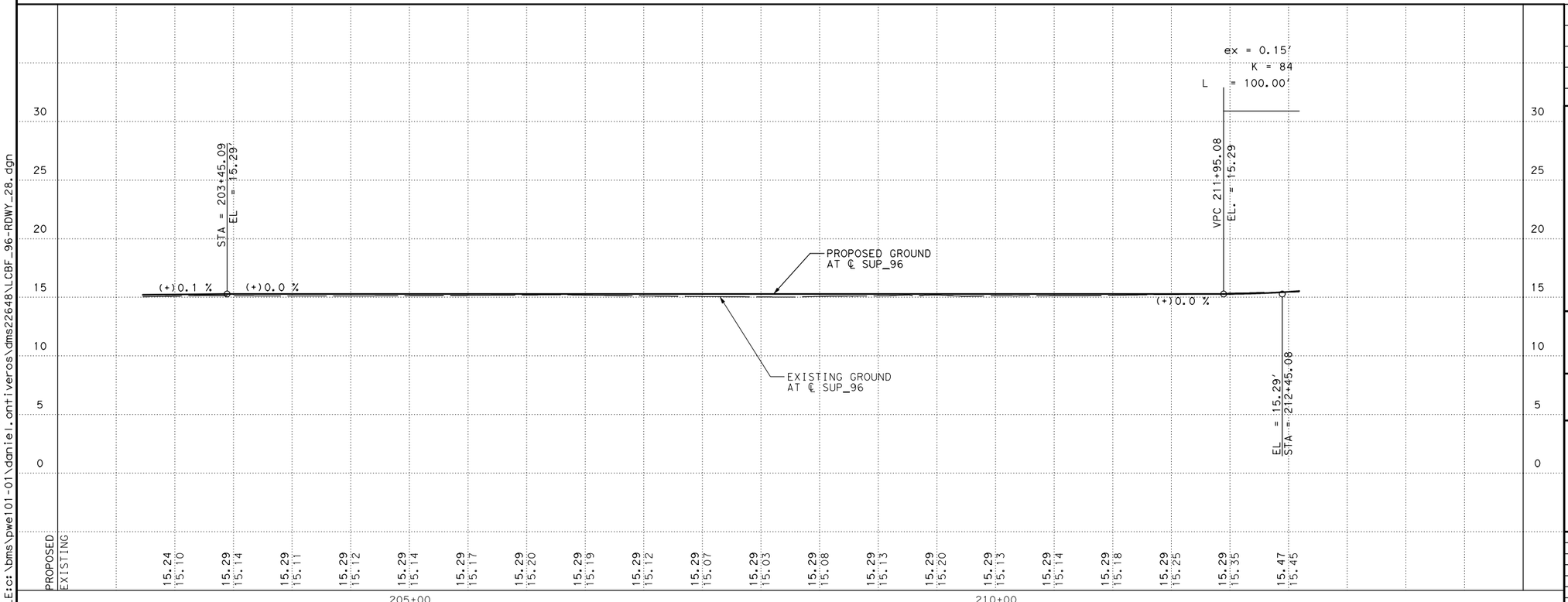

NO.	DATE	REVISION	APPROVED

JOHANNA TORRES
130063
LICENSED PROFESSIONAL ENGINEER
STATE OF TEXAS
johannatorres
8/2/2023

Texas Department of Transportation
©2023

JONES|CARTER
Texas Board of Professional Engineers Registration No. F-23290
4350 Lockhill Selma Rd, Suite 100• San Antonio, Texas 78249 •210.494.5511

SH 96, FM 270
SH 96
PLAN AND PROFILE
STA 405+00 TO STA 415+00

SHEET **28** OF **29**

DRAWN	FED. RD. DIV. NO.	FEDERAL AID PROJECT NO.		HIGHWAY NO.
AA	06			FM 270, ETC
DESIGNED	STATE	DIST.	COUNTY	SHEET NO.
JT	TEXAS	HOUSTON	GALVESTON	147
CHECKED	CONT.	SECT.	JOB	
NG	0912	73	215	
APPROVED				
DD				

PLOTDRIVER: LCBF.pltcfg
PENTABLE: LCBF.tbl
DATE: 8/2/2023 2:56:03 AM USER: do
FILE: c:\bms\pwe101-01\daniel.ontiveros\dms22648\LCBF_96-RDWY_28.dgn

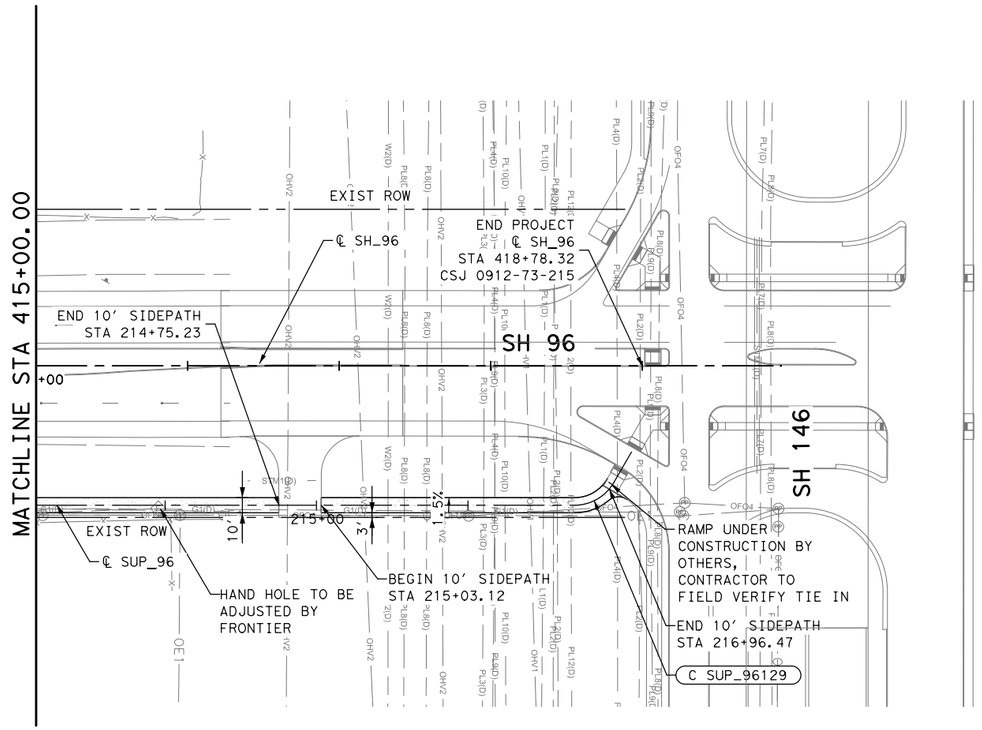

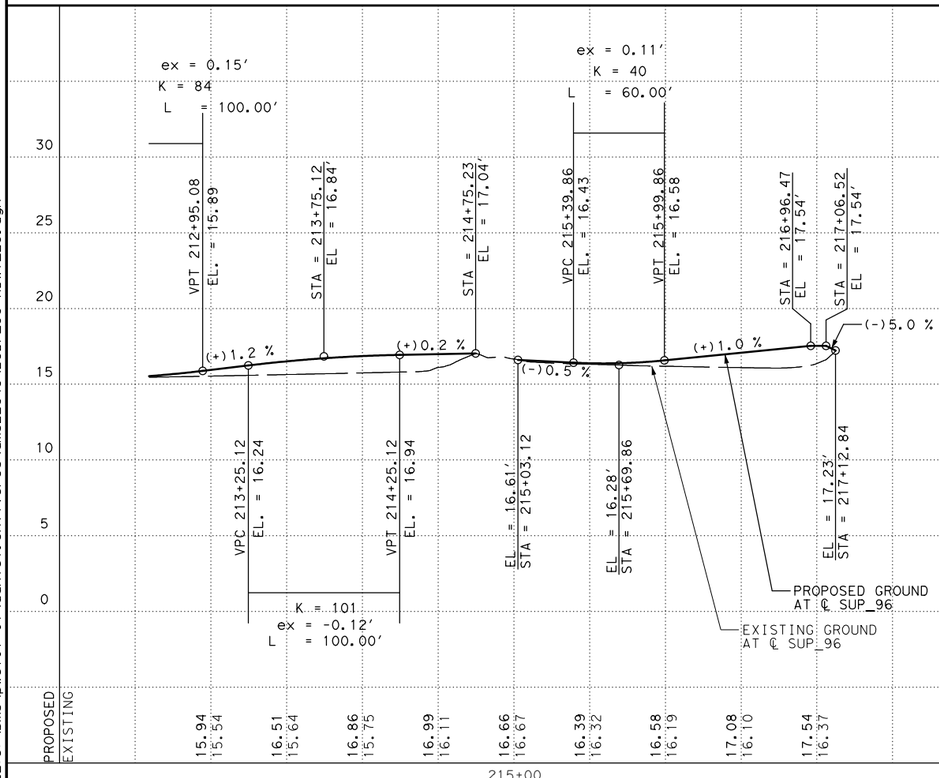

0' 25' 50' 100'

LEGEND:

- EXISTING DIRECTION OF TRAVEL
- DIRECTION OF TRAVEL
- EXISTING ROW
- SAWCUT LINE
- PROPOSED PEDESTRIAN HANDRAIL
- PROPOSED SIDEPATH
- PROPOSED WIDENING
- WETLAND
- PROPOSED ASPHALT DRIVEWAY
- PROPOSED CONCRETE DRIVEWAY
- # DRIVEWAY NUMBER
- C_XXX_XXX CURVE NUMBER

NOTE:

1. PLAN VIEW IS BASED ON ROADWAY BASELINE.
PROFILE VIEW IS BASED ON SIDEPATH CENTERLINE.
2. REFER TO INTERSECTION LAYOUT FOR RAMP DETAILS.
3. LEAGUE CITY EASEMENT LOCATIONS ARE APPROXIMATE. CONTRACTOR TO VERIFY
4. THE PLANIMETRICS SHOWN AT SH 146 ARE REFERENCED FROM THE ADJACENT SH 146 PROJECT AND MAY NOT REFLECT FIELD CONDITIONS AT THE TIME OF BICYCLE FACILITY CONSTRUCTION.
THE CONTRACTOR IS TO FIELD VERIFY THE TIE-IN.

NO.	DATE	REVISION	APPROVED

JOHANNA TORRES
130063
LICENSED
PROFESSIONAL ENGINEER
STATE OF TEXAS
johannatorres
8/2/2023

Texas Department of Transportation
©2023

JONES|CARTER
Texas Board of Professional Engineers Registration No. F-23290
4350 Lockhill Selma Rd, Suite 100• San Antonio, Texas 78249 •210.494.5511

SH 96, FM 270
SH 96
PLAN AND PROFILE
STA 415+00 TO END

SHEET **29** OF **29**

DRAWN	FED. RD. DIV. NO.	FEDERAL AID PROJECT NO.		HIGHWAY NO.
AA	06			FM 270, ETC
DESIGNED	STATE	DIST.	COUNTY	SHEET NO.
JT	TEXAS	HOUSTON	GALVESTON	148
CHECKED	CONT.	SECT.	JOB	
NG	0912	73	215	
APPROVED				
DD				

PLOTDRIVER: LCBF.pltcfg
PENTABLE: LCBF.tbl
DATE: 8/2/2023 2:56:07 AM USER: do
FILE: c:\bms\pwe101-01\daniel.ontiveros\dms22648\LCBF_96-RDWY_29.dgn

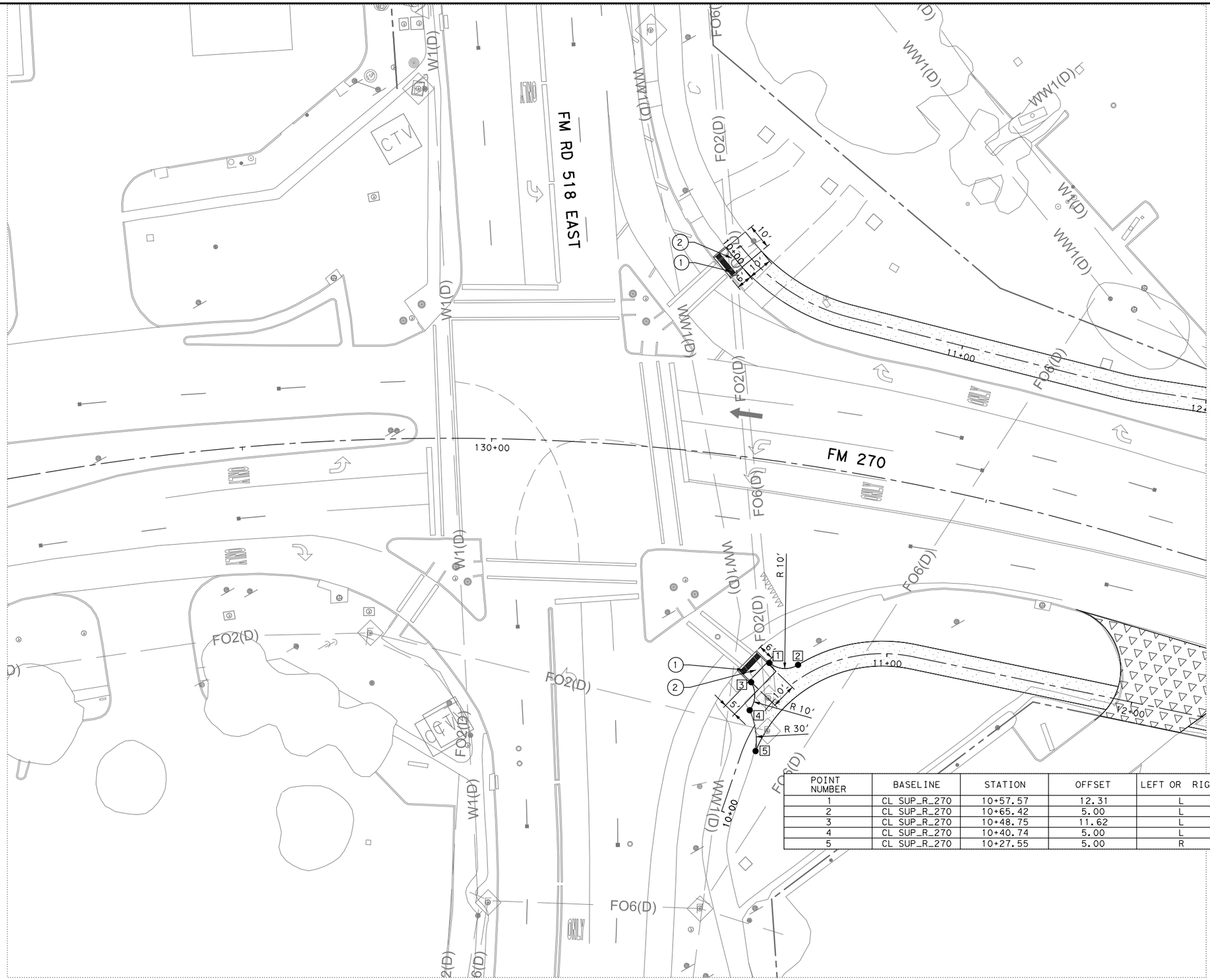

POINT NUMBER	BASELINE	STATION	OFFSET	LEFT OR RIGHT
1	CL SUP_R_270	10+57.57	12.31	L
2	CL SUP_R_270	10+65.42	5.00	L
3	CL SUP_R_270	10+48.75	11.62	L
4	CL SUP_R_270	10+40.74	5.00	L
5	CL SUP_R_270	10+27.55	5.00	R

NO.	DATE	REVISION	APPROVED

STATE OF TEXAS
JOHANNA TORRES
130063
LICENSED PROFESSIONAL ENGINEER
johannatorres
8/2/2023

Texas Department of Transportation
©2023

JONES|CARTER
Texas Board of Professional Engineers Registration No. F-23290
4350 Lockhill Selma Rd, Suite 100•San Antonio, Texas 78249•210.494.5511

SH 96, FM 270
FM 270 AT FM 518
INTERSECTION LAYOUT

SHEET **01** OF **09**

DRAWN	FED.RD. DIV.NO.	FEDERAL AID PROJECT NO.		HIGHWAY NO.
AA	06			FM 270,ETC
DESIGNED	STATE	DIST.	COUNTY	SHEET NO.
JT	TEXAS	HOUSTON	GALVESTON	149
CHECKED	CONT.	SECT.	JOB	
NG	0912	73	215	
APPROVED				
DD				

PLOTDRIVER: LCBF.pltcfg PENTABLE: LCBF.tbl
DATE:8/2/2023 2:56:13 AM USER:do
FILE:c:\bms\pwe101-01\daniel.ontiveros\dms25649\LCBF_INT_01.dgn

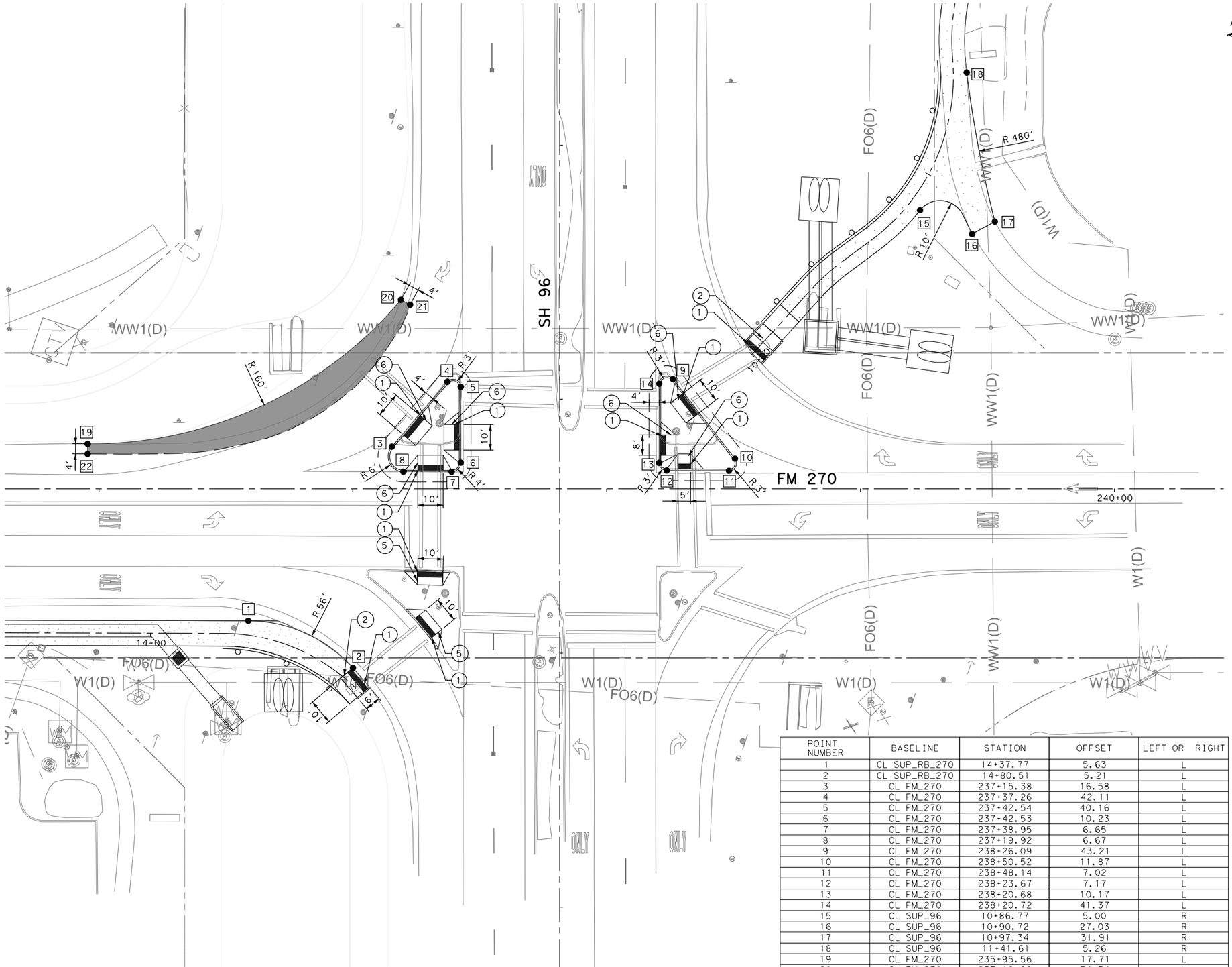

POINT NUMBER	BASELINE	STATION	OFFSET	LEFT OR RIGHT
1	CL SUP_RB_270	14+37.77	5.63	L
2	CL SUP_RB_270	14+80.51	5.21	L
3	CL FM_270	237+15.38	16.58	L
4	CL FM_270	237+37.26	42.11	L
5	CL FM_270	237+42.54	40.16	L
6	CL FM_270	237+42.53	10.23	L
7	CL FM_270	237+38.95	6.65	L
8	CL FM_270	237+19.92	6.67	L
9	CL FM_270	238+26.09	43.21	L
10	CL FM_270	238+50.52	11.87	L
11	CL FM_270	238+48.14	7.02	L
12	CL FM_270	238+23.67	7.17	L
13	CL FM_270	238+20.68	10.17	L
14	CL FM_270	238+20.72	41.37	L
15	CL SUP_96	10+86.77	5.00	R
16	CL SUP_96	10+90.72	27.03	R
17	CL SUP_96	10+97.34	31.91	R
18	CL SUP_96	11+41.61	5.26	R
19	CL FM_270	235+95.56	17.71	L
20	CL FM_270	237+18.98	74.34	L
21	CL FM_270	237+22.55	72.41	L
22	CL FM_270	235+95.55	13.71	L

NO.	DATE	REVISION	APPROVED

STATE OF TEXAS
JOHANNA TORRES
130063
LICENSED
PROFESSIONAL ENGINEER
johannatorres
8/2/2023

Texas Department of Transportation
©2023

JONES|CARTER
Texas Board of Professional Engineers Registration No. F-23290
4350 Lockhill Selma Rd, Suite 100 • San Antonio, Texas 78249 • 210.494.5511

SH 96, FM 270
FM 270 AT SH 96
INTERSECTION LAYOUT

SHEET **02** OF **09**

DRAWN	FED.RD. DIV.NO.	FEDERAL AID PROJECT NO.		HIGHWAY NO.
AA	06			FM 270, ETC
DESIGNED	STATE	DIST.	COUNTY	SHEET NO.
JT	TEXAS	HOUSTON	GALVESTON	150
CHECKED	CONT.	SECT.	JOB	
NG	0912	73	215	
APPROVED				
DD				

PLOTDRIVER: LCBF.pltcfg PENTABLE: LCBF.tbl
DATE: 8/2/2023 2:56:38 AM USER: do
FILE: c:\bms\pwe101-01\daniel.ontiveros\dms25649\LCBF_INT_02.dgn

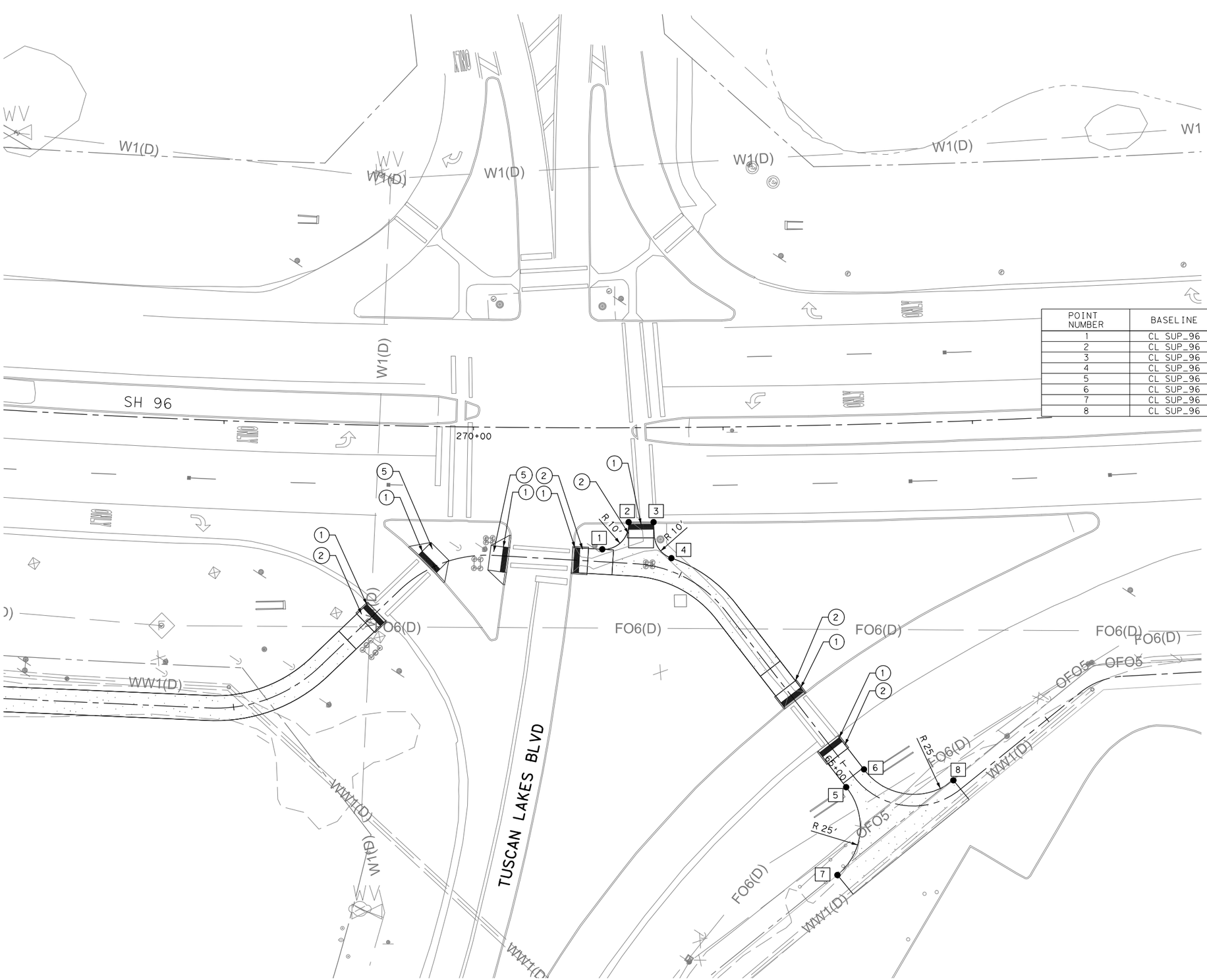

LEGEND:

1. DETECTABLE WARNING
2. RAMP TY 1
3. RAMP TY 7
4. RAMP TY 5
5. RAMP TY 20
6. RAMP TY 22
7. RAMP TY 21

PROPOSED WIDENING

POINT NUMBER	BASELINE	STATION	OFFSET	LEFT OR RIGHT
1	CL SUP_96	63+67.79	5.00	L
2	CL SUP_96	63+77.70	16.47	L
3	CL SUP_96	63+86.02	17.37	L
4	CL SUP_96	63+94.50	5.00	L
5	CL SUP_96	65+08.68	5.02	R
6	CL SUP_96	65+07.58	5.02	L
7	CL SUP_96	65+20.39	35.19	R
8	CL SUP_96	65+55.47	4.60	L

NO.	DATE	REVISION	APPROVED

STATE OF TEXAS
JOHANNA TORRES
130063
LICENSED
PROFESSIONAL ENGINEER
johannatorres
8/2/2023

Texas Department of Transportation
©2023

JONES|CARTER
Texas Board of Professional Engineers Registration No. F-23290
4350 Lockhill Selma Rd, Suite 100 • San Antonio, Texas 78249 • 210.494.5511

SH 96, FM 270
SH 96 AT
TUSCAN LAKES BLVD
INTERSECTION LAYOUT

SHEET **03** OF **09**

DRAWN	FED.RD. DIV.NO.	FEDERAL AID PROJECT NO.		HIGHWAY NO.
AA	06			FM 270, ETC
DESIGNED	STATE	DIST.	COUNTY	SHEET NO.
JT	TEXAS	HOUSTON	GALVESTON	151
CHECKED	CONT.	SECT.	JOB	
NG	0912	73	215	
APPROVED				
DD				

PLOTDRIVER: LCBF.pltcfg
PENTABLE: LCBF.tbl
DATE: 8/2/2023 2:56:39 AM USER: do
FILE: c:\bms\pwe101-01\daniel.ontiveros\dms25649\LCBF_INT_03.dgn

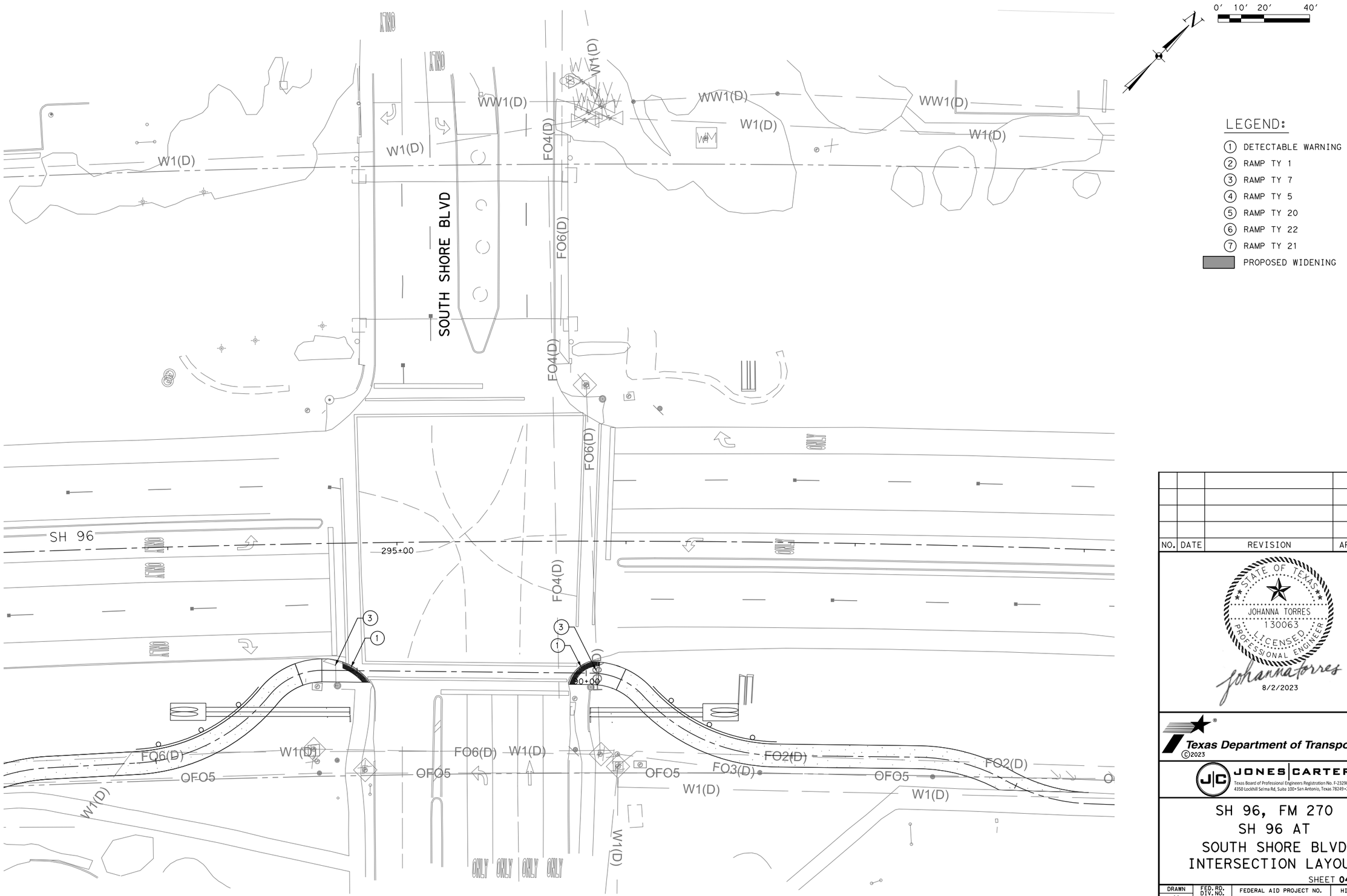

LEGEND:

1. DETECTABLE WARNING
2. RAMP TY 1
3. RAMP TY 7
4. RAMP TY 5
5. RAMP TY 20
6. RAMP TY 22
7. RAMP TY 21

PROPOSED WIDENING

NO.	DATE	REVISION	APPROVED

STATE OF TEXAS
JOHANNA TORRES
130063
LICENSED
PROFESSIONAL ENGINEER
Johanna Torres
8/2/2023

Texas Department of Transportation
©2023

JONES | CARTER
Texas Board of Professional Engineers Registration No. F-23290
4350 Lockhill Selma Rd, Suite 100 • San Antonio, Texas 78249 • 210.494.5511

SH 96, FM 270
SH 96 AT
SOUTH SHORE BLVD
INTERSECTION LAYOUT

SHEET **04** OF **09**

DRAWN	FED. RD. DIV. NO.	FEDERAL AID PROJECT NO.		HIGHWAY NO.
AA	06			FM 270, ETC
DESIGNED				
JT	STATE	DIST.	COUNTY	SHEET NO.
CHECKED	TEXAS	HOUSTON	GALVESTON	152
NG	CONT.	SECT.	JOB	
APPROVED	0912	73	215	
DD				

PENTABLE: LCBF.tbl
PLOTDRIVER: LCBF.pltcfg
USER: do
DATE: 8/2/2023 2:56:41 AM
FILE: c:\bms\pwe101-01\daniel.ontiveros\dms25649\LCBF_INT_04.dgn

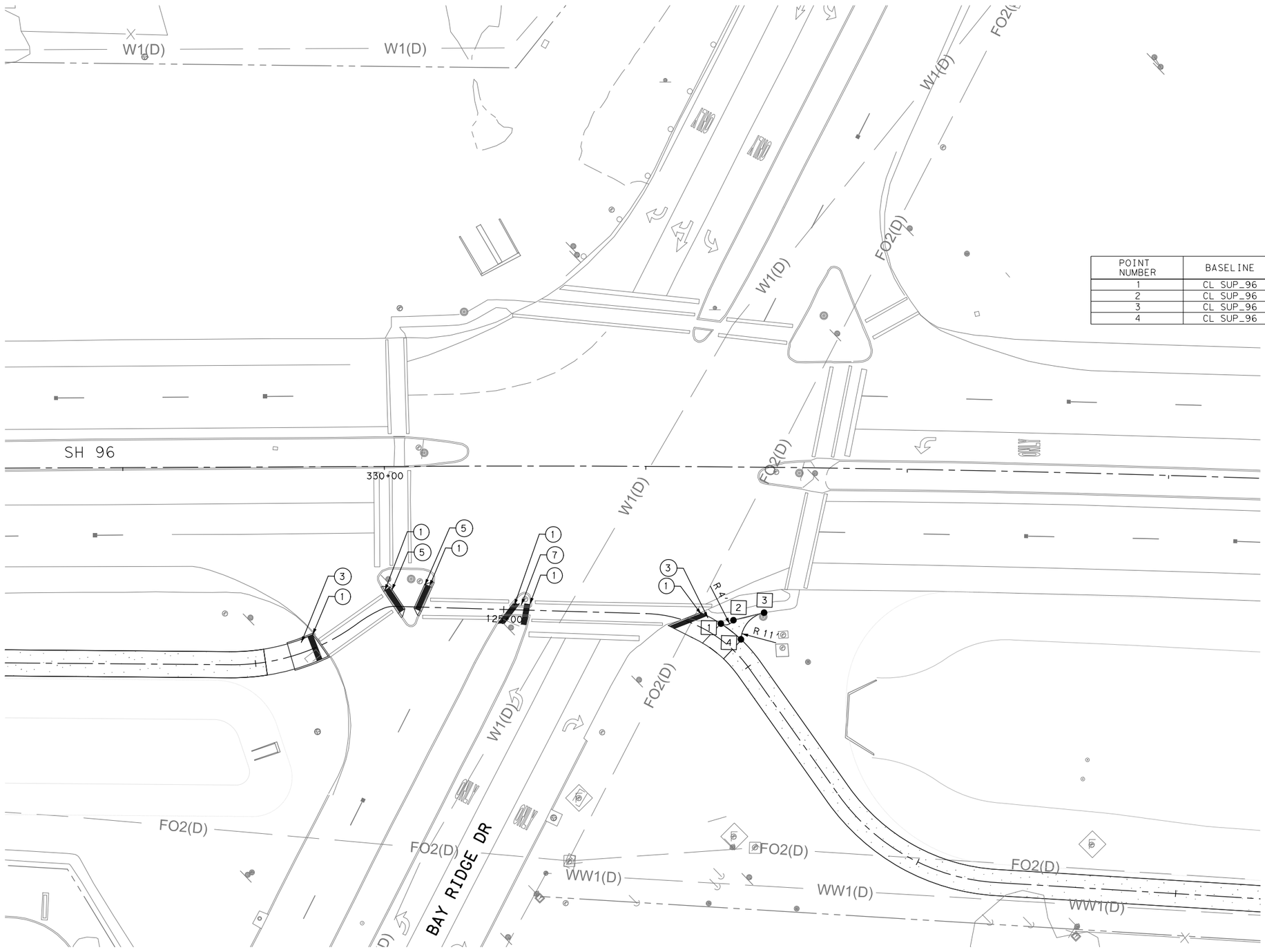

LEGEND:

1. DETECTABLE WARNING
2. RAMP TY 1
3. RAMP TY 7
4. RAMP TY 5
5. RAMP TY 20
6. RAMP TY 22
7. RAMP TY 21

PROPOSED WIDENING

POINT NUMBER	BASELINE	STATION	OFFSET	LEFT OR RIGHT
1	CL SUP_96	125+81.87	5.00	L
2	CL SUP_96	125+84.70	8.81	L
3	CL SUP_96	125+90.37	18.50	L
4	CL SUP_96	125+90.75	5.00	L

NO.	DATE	REVISION	APPROVED

STATE OF TEXAS
JOHANNA TORRES
130063
LICENSED
PROFESSIONAL ENGINEER
johannatorres
8/2/2023

Texas Department of Transportation
©2023

JONES|CARTER
Texas Board of Professional Engineers Registration No. F-23290
4350 Lockhill Selma Rd, Suite 100 • San Antonio, Texas 78249 • 210.494.5511

SH 96, FM 270
SH 96 AT BAY RIDGE DR
INTERSECTION LAYOUT

SHEET **05** OF **09**

DRAWN	FED.RD. DIV.NO.	FEDERAL AID PROJECT NO.		HIGHWAY NO.
AA	06			FM 270, ETC
DESIGNED	STATE	DIST.	COUNTY	SHEET NO.
JT	TEXAS	HOUSTON	GALVESTON	153
CHECKED	CONT.	SECT.	JOB	
NG	0912	73	215	
APPROVED				
DD				

DATE:8/2/2023 2:56:46 AM USER:do
FILE:c:\bms\pwe101-01\daniel.ontiveros\dms25649\LCBF_INT_05.dgn
PLOTDRIVER:LCBF.pltcfg PENTABLE:LCBF.tbl

POINT NUMBER	BASELINE	STATION	OFFSET	LEFT OR RIGHT
1	CL SUP_96	148+31.68	5.00	L
2	CL SUP_96	148+43.52	10.33	L
3	CL SUP_96	148+43.64	2.76	R
4	CL SUP_96	148+31.68	5.00	R
5	CL SUP_96	149+53.58	2.77	R
6	CL SUP_96	149+53.74	10.31	L
7	CL SUP_96	149+59.04	5.65	L
8	CL SUP_96	149+68.09	5.00	L
9	CL SUP_96	149+75.97	3.00	L
10	CL SUP_96	149+85.61	3.00	L
11	CL SUP_96	149+68.09	5.00	R
12	CL SUP_96	148+23.78	5.00	R

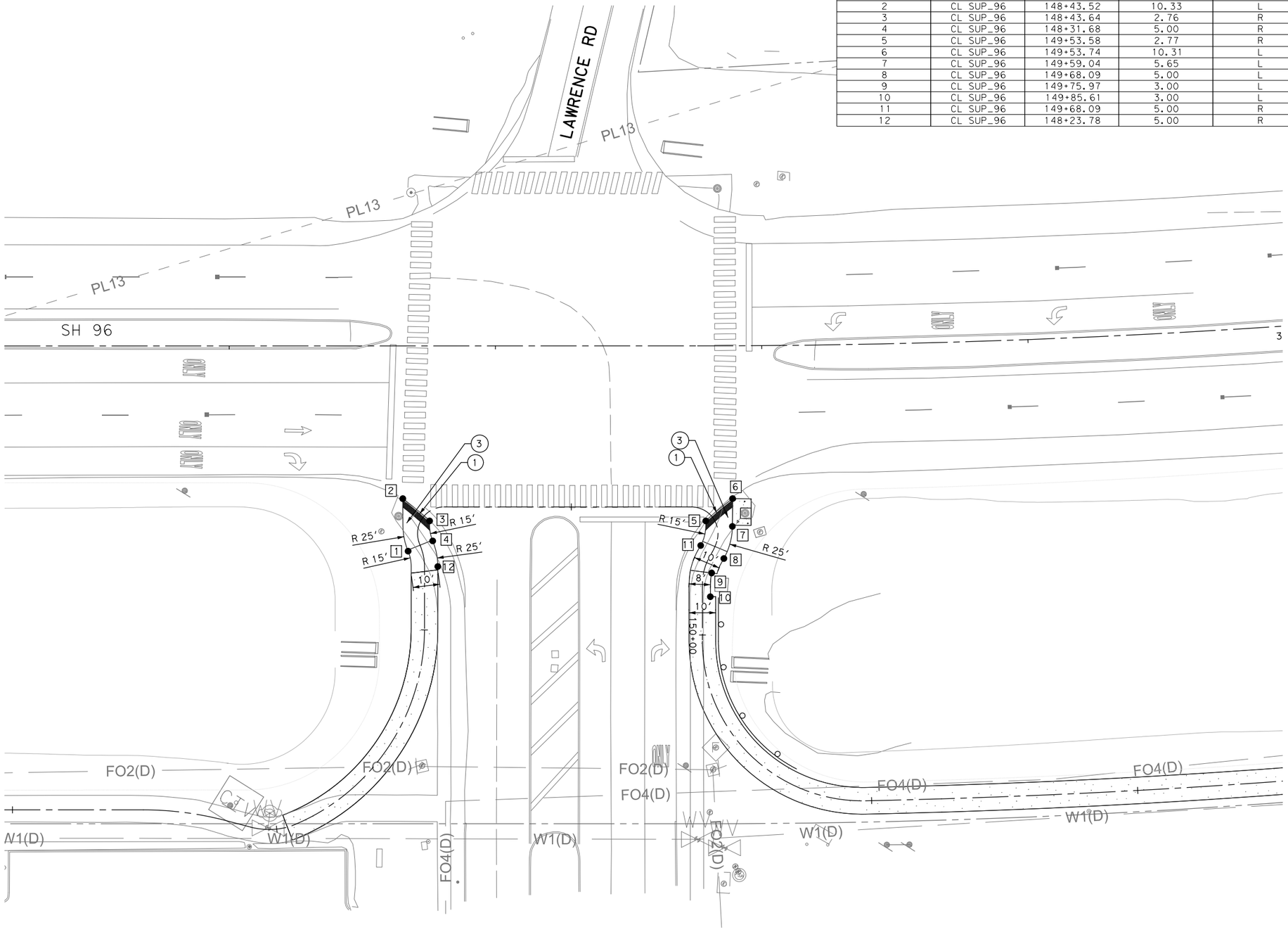

0' 10' 20' 40'

N

LEGEND:

1. DETECTABLE WARNING
2. RAMP TY 1
3. RAMP TY 7
4. RAMP TY 5
5. RAMP TY 20
6. RAMP TY 22
7. RAMP TY 21

PROPOSED WIDENING

NO.	DATE	REVISION	APPROVED

STATE OF TEXAS
JOHANNA TORRES
130063
LICENSED
PROFESSIONAL ENGINEER
johannatorres
8/2/2023

Texas Department of Transportation
©2023

JONES|CARTER
Texas Board of Professional Engineers Registration No. F-23290
4350 Lockhill Selma Rd, Suite 100 • San Antonio, Texas 78249 • 210.494.5511

SH 96, FM 270
SH 96 AT LAWRENCE RD
INTERSECTION LAYOUT

SHEET **06** OF **09**

DRAWN	FED. RD. DIV. NO.	FEDERAL AID PROJECT NO.		HIGHWAY NO.
AA	06			FM 270, ETC
DESIGNED	STATE	DIST.	COUNTY	SHEET NO.
JT	TEXAS	HOUSTON	GALVESTON	154
CHECKED	CONT.	SECT.	JOB	
NG	0912	73	215	
APPROVED				
DD				

PLOTDRIVER: LCBF.pltcfg
PENTABLE: LCBF.tbl
USER: do
DATE: 8/2/2023 2:56:49 AM
FILE: c:\bms\pwe101-01\daniel.ontiveros\dms25649\LCBF_INT_06.dgn

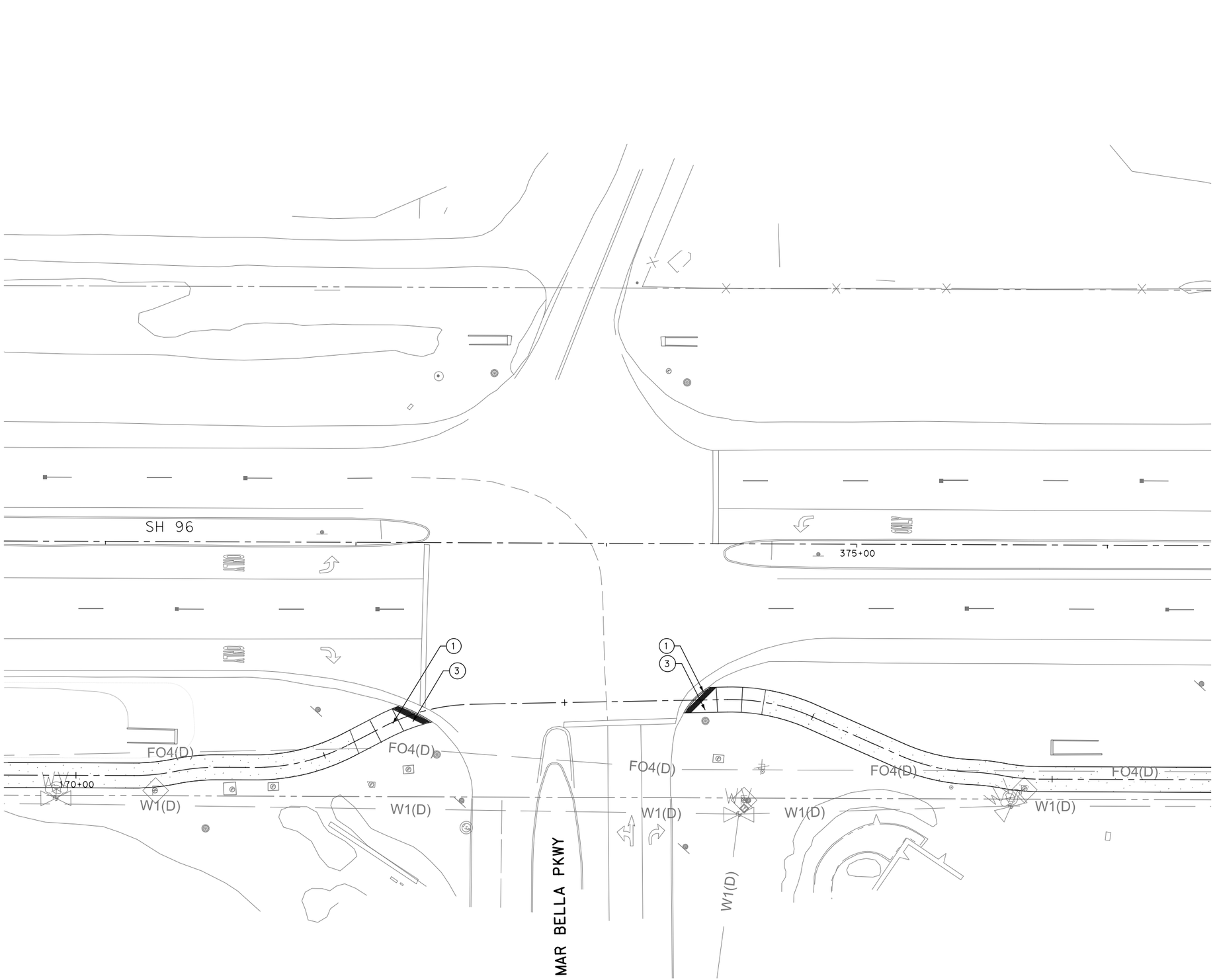

0' 10' 20' 40'

LEGEND:

1. DETECTABLE WARNING
2. RAMP TY 1
3. RAMP TY 7
4. RAMP TY 5
5. RAMP TY 20
6. RAMP TY 22
7. RAMP TY 21

PROPOSED WIDENING

NO.	DATE	REVISION	APPROVED

STATE OF TEXAS
JOHANNA TORRES
130063
LICENSED
PROFESSIONAL ENGINEER
Johanna Torres
8/2/2023

Texas Department of Transportation
©2023

JONES | CARTER
Texas Board of Professional Engineers Registration No. F-23290
4350 Lockhill Selma Rd, Suite 100 • San Antonio, Texas 78249 • 210.494.5511

SH 96, FM 270
SH 96 AT MAR BELLA PKWY
INTERSECTION LAYOUT

SHEET 07 OF 09

DRAWN	FED. RD. DIV. NO.	FEDERAL AID PROJECT NO.		HIGHWAY NO.
AA	06			FM 270, ETC
DESIGNED	STATE	DIST.	COUNTY	SHEET NO.
JT	TEXAS	HOUSTON	GALVESTON	155
CHECKED	CONT.	SECT.	JOB	
NG	0912	73	215	
APPROVED				
DD				

PENTABLE: LCBF.tbl
PLOTDRIVER: LCBF.pltcfg
USER: do
DATE: 8/2/2023 2:56:53 AM
FILE: c:\bms\pwe101-01\daniel.ontiveros\dms25649\LCBF_INT_07.dgn

PENTABLE:LCBF.tbl
PLOTDRIVER:LCBF.pltcfg
DATE:8/2/2023 2:56:59 AM USER:do
FILE:c:\bms\pwe101-01\daniel.ontiveros\dms25649\LCBF_INT_08.dgn

0' 10' 20' 40'

N

LEGEND:

1. DETECTABLE WARNING
2. RAMP TY 1
3. RAMP TY 7
4. RAMP TY 5
5. RAMP TY 20
6. RAMP TY 22
7. RAMP TY 21

PROPOSED WIDENING

POINT NUMBER	BASELINE	STATION	OFFSET	LEFT OR RIGHT
1	CL SUP_96	197+57.67	15.36	L
2	CL SUP_96	197+68.56	4.61	R
3	CL SUP_96	197+49.97	5.00	L
4	CL SUP_96	197+49.97	5.00	R
5	CL SUP_96	198+76.70	4.78	R
6	CL SUP_96	198+82.12	11.84	L
7	CL SUP_96	198+88.32	5.69	L

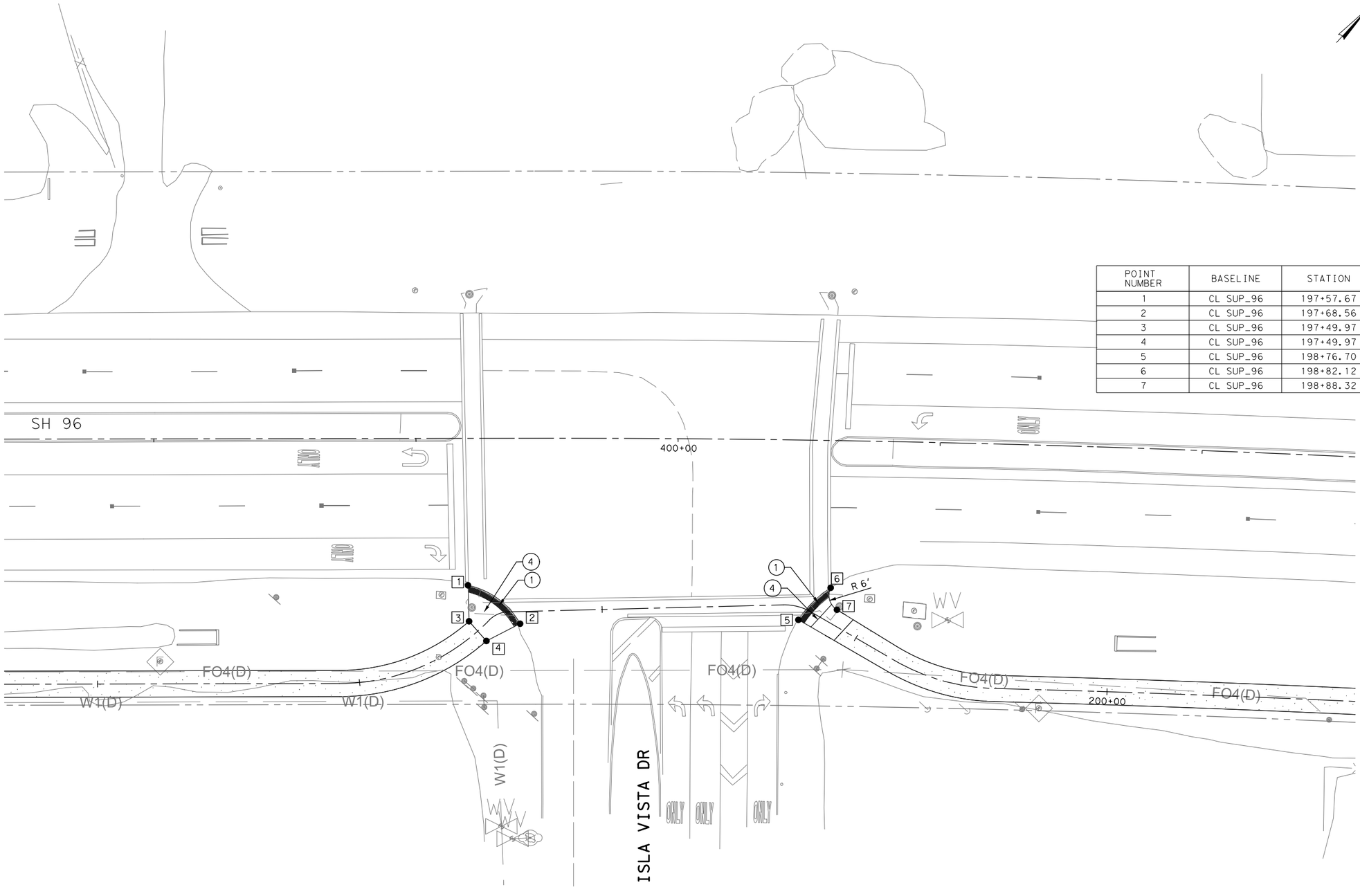

NO.	DATE	REVISION	APPROVED

STATE OF TEXAS
JOHANNA TORRES
130063
LICENSED PROFESSIONAL ENGINEER
8/2/2023

Texas Department of Transportation
©2023

JONES|CARTER
Texas Board of Professional Engineers Registration No. F-23290
4350 Lockhill Selma Rd, Suite 100•San Antonio, Texas 78249•210.494.5511

SH 96, FM 270
SH 96 ISLA VISTA DR
INTERSECTION LAYOUT

SHEET **08** OF **09**

DRAWN	FED.RD. DIV.NO.	FEDERAL AID PROJECT NO.		HIGHWAY NO.
AA	06			FM 270,ETC
DESIGNED	STATE	DIST.	COUNTY	SHEET NO.
JT	TEXAS	HOUSTON	GALVESTON	156
CHECKED	CONT.	SECT.	JOB	
NG	0912	73	215	
APPROVED				
DD				

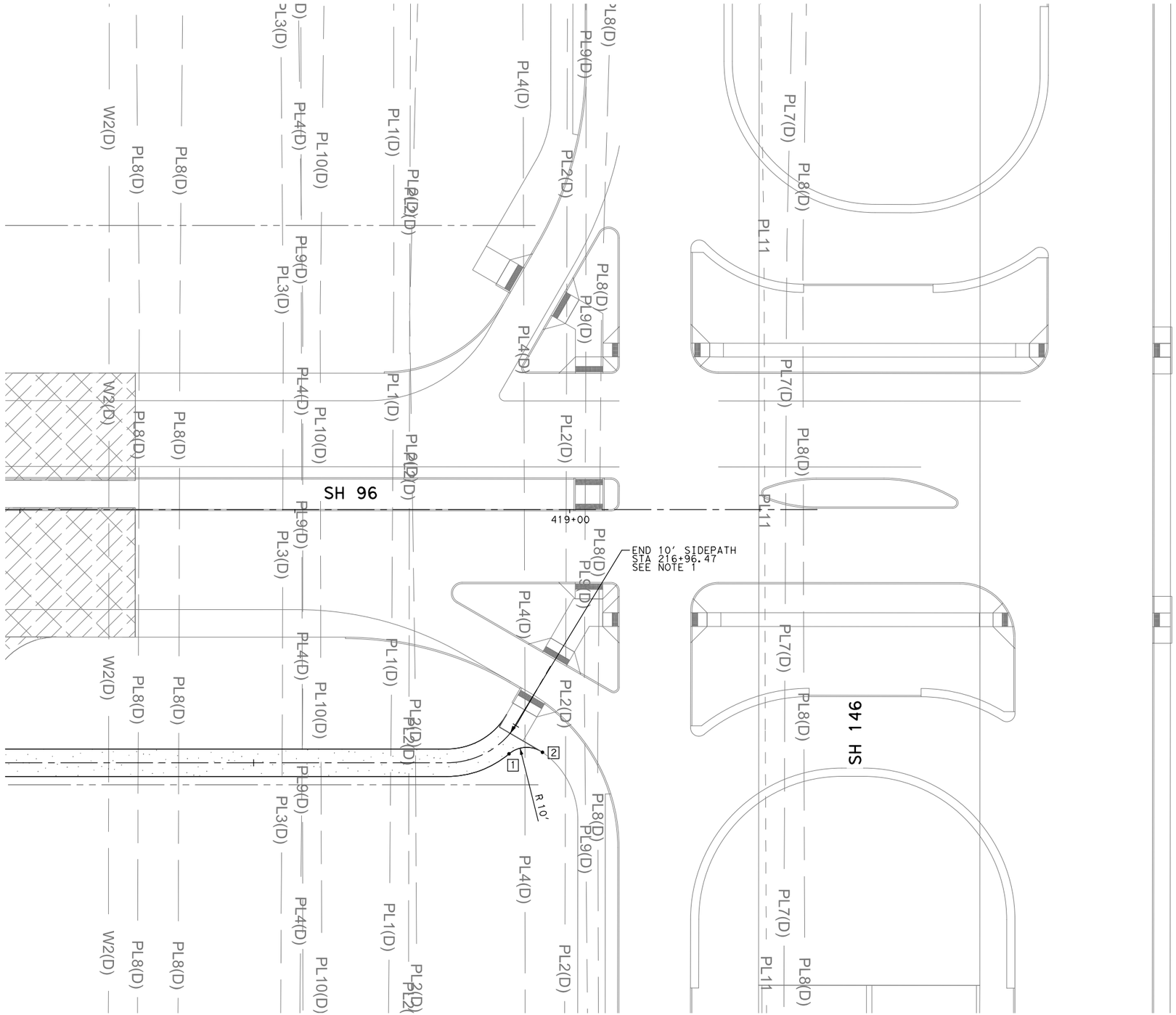

0' 10' 20' 40'

LEGEND:

1. DETECTABLE WARNING
2. RAMP TY 1
3. RAMP TY 7
4. RAMP TY 5
5. RAMP TY 20
6. RAMP TY 22
7. RAMP TY 21

PROPOSED WIDENING

POINT NUMBER	BASELINE	STATION	OFFSET	LEFT OR RIGHT
1	CL SUP_96	216+91.33	5.00	R
2	CL SUP_96	216+98.05	13.49	R

NOTE:

1. THE PLANIMETRICS SHOWN AT SH 146 ARE REFERENCED FROM THE ADJACENT SH 146 PROJECT AND MAY NOT REFLECT FIELD CONDITIONS AT THE TIME OF BICYCLE FACILITY CONSTRUCTION. THE CONTRACTOR IS TO FIELD VERIFY THE TIE-IN.

NO.	DATE	REVISION	APPROVED

STATE OF TEXAS
JOHANNA TORRES
130063
LICENSED
PROFESSIONAL ENGINEER
johannatorres
8/2/2023

Texas Department of Transportation
©2023

JONES|CARTER
Texas Board of Professional Engineers Registration No. F-23290
4350 Lockhill Selma Rd, Suite 100 • San Antonio, Texas 78249 • 210.494.5511

SH 96, FM 270
SH 96 AT SH 146
INTERSECTION LAYOUT

SHEET **09** OF **09**

DRAWN	FED.RD. DIV.NO.	FEDERAL AID PROJECT NO.		HIGHWAY NO.
AA	06			FM 270, ETC
DESIGNED	STATE	DIST.	COUNTY	SHEET NO.
JT	TEXAS	HOUSTON	GALVESTON	157
CHECKED	CONT.	SECT.	JOB	
NG	0912	73	215	
APPROVED				
DD				

PLOTDRIVER: LCBF.pltcfg
PENTABLE: LCBF.tbl
USER: do
2:57:03 AM
DATE: 8/2/2023
FILE: c:\bms\pwe101-01\daniel.ontiveros\dms25649\LCBF_INT_09.dgn

DRIVEWAY NUMBER	ALIGNMENT	STATION	LT/RT	PROPOSED WIDTH W LF	PROPOSED TOTAL LENGTH L LF	PROP LENGTH L1 LF	VERTICAL CURVE LENGTH C1 LF	PROP LENGTH L2 LF	VERTICAL CURVE LENGTH C2 LF	PROP LENGTH L3 LF	SLOPE S1 %	SLOPE S2 %	SLOPE S3 %	RADIUS 1 R1 FT	RADIUS 2 R2 FT	EXISTING SURFACE MATERIAL
1	FM_270	132+78.62	RT	32.74	37.47	21.13	0.00	13.34	0.00	3.00	5.00	1.50	0.84	25.00	25.00	CONCRETE
2	FM_270	135+04.92	RT	40.66	26.25	13.26	0.00	9.99	0.00	3.00	2.19	1.50	0.24	25.00	25.00	CONCRETE
3	FM_270	139+56.98	RT	40.35	34.60	12.56	4.00	10.00	5.00	3.04	8.00	1.50	8.00	25.00	25.00	CONCRETE
4	FM_270	142+24.47	LT	35.03	25.64	12.67	0.00	12.97	0.00	0.00	4.02	1.50	0.00	25.00	25.00	CONCRETE
5	FM_270	142+49.57	RT	43.83	25.84	12.86	0.00	9.98	0.00	3.00	-1.43	-1.50	-1.26	25.00	40.00	ASPHALT
6	FM_270	143+47.66	RT	35.01	26.02	13.02	0.00	10.00	0.00	3.00	3.99	1.50	0.46	25.00	25.00	CONCRETE
7	FM_270	143+65.70	LT	35.02	25.05	12.78	0.00	10.00	0.00	2.27	1.90	1.50	0.19	25.00	25.00	CONCRETE
8	FM_270	144+32.20	RT	46.94	26.84	13.85	0.00	9.99	0.00	3.00	5.96	1.50	0.82	25.00	25.00	CONCRETE
9	FM_270	145+45.79	LT	29.89	29.52	11.87	4.00	10.65	0.00	3.00	8.00	1.50	3.50	25.00	25.00	CONCRETE
10	FM_270	159+45.84	LT	76.39	36.82	22.51	0.00	14.31	0.00	0.00	-6.00	-7.87	0.00	25.00	25.00	ASPHALT
11	FM_270	163+60.04	LT	48.00	17.79	17.79	0.00	0.00	0.00	0.00	-3.06	0.00	0.00	25.00	25.00	ASPHALT
12	FM_270	167+50.49	LT	8.95	14.91	10.71	0.00	4.20	0.00	0.00	2.50	1.85	0.00	15.00	15.00	ASPHALT
13	FM_270	186+23.67	RT	28.31	26.45	26.45	0.00	0.00	0.00	0.00	5.30	0.00	0.00	25.00	25.00	ASPHALT
14	FM_270	186+37.89	LT	28.70	16.28	16.28	0.00	0.00	0.00	0.00	3.26	0.00	0.00	25.00	25.00	ASPHALT
15	FM_270	222+86.87	LT	17.19	22.19	12.55	5.00	4.64	0.00	0.00	8.00	3.52	0.00	25.00	20.00	ASPHALT
16	FM_270	222+87.98	RT	49.24	16.24	16.24	0.00	0.00	0.00	0.00	6.27	0.00	0.00	25.00	25.00	ASPHALT
17	FM_270	227+69.75	LT	24.46	26.82	10.40	0.00	13.63	0.00	2.79	-0.12	4.00	0.79	22.46	15.00	ASPHALT
18	FM_270	231+55.72	LT	27.17	32.19	0.00	0.00	15.17	0.00	17.02	0.00	3.00	1.43	20.00	20.00	ASPHALT
19	SH_96	317+71.49	RT	25.45	47.18	27.61	0.00	10.00	0.00	9.57	-2.31	-1.50	-2.90	35.00	35.00	ASPHALT
20	SH_96	320+78.23	RT	49.26	40.80	7.12	0.00	10.00	0.00	23.68	-4.00	-1.50	-2.60	20.00	20.00	ASPHALT
21	SH_96	322+16.78	RT	29.42	50.79	7.16	0.00	10.00	0.00	33.63	-4.00	-1.50	-1.73	25.00	20.00	ASPHALT
22	SH_96	323+08.25	RT	13.73	56.44	18.32	0.00	38.12	0.00	0.00	-1.50	0.93	0.00	13.28	40.00	ASPHALT
23	SH_96	323+52.54	RT	17.20	60.29	18.88	0.00	41.41	0.00	0.00	-1.50	0.41	0.00	19.21	13.28	ASPHALT
24	SH_96	324+19.23	RT	38.95	66.18	52.00	0.00	14.18	0.00	0.00	-1.50	0.36	0.00	25.00	19.21	ASPHALT

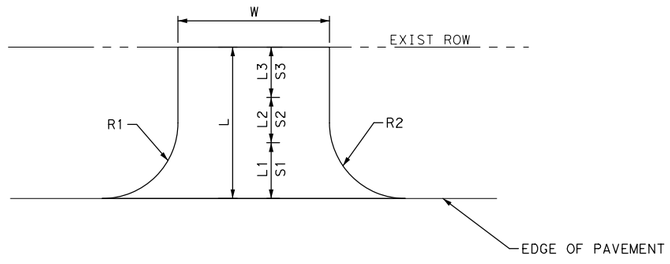

NO.	DATE	REVISION	APPROVED

STATE OF TEXAS
JOHANNA TORRES
130063
LICENSED
PROFESSIONAL ENGINEER
8/1/2023

Texas Department of Transportation
©2023

JONES | CARTER
Texas Board of Professional Engineers Registration No. F-23290
4350 Lockhill Selma Rd, Suite 100• San Antonio, Texas 78249 •210.494.5511

SH 96, FM 270
DRIVEWAY SUMMARY

SHEET 1 OF 1

DRAWN	FED.RD. DIV.NO.	FEDERAL AID PROJECT NO.		HIGHWAY NO.
AA	06			FM 270,ETC
DESIGNED	STATE	DIST.	COUNTY	SHEET NO.
JT	TEXAS	HOUSTON	GALVESTON	
CHECKED	CONT.	SECT.	JOB	158
NG	0912	73	215	
APPROVED				
DD				

PLOTDRIVER: LCBF.pltcfg PENTABLE: LCBF.tbl
DATE:8/1/2023 12:02:43 PM USER:sss
FILE:c:\bms\pwe101-01\stela.staver-scull\dms22651\LCBF_DRVWY_SUM.dgn

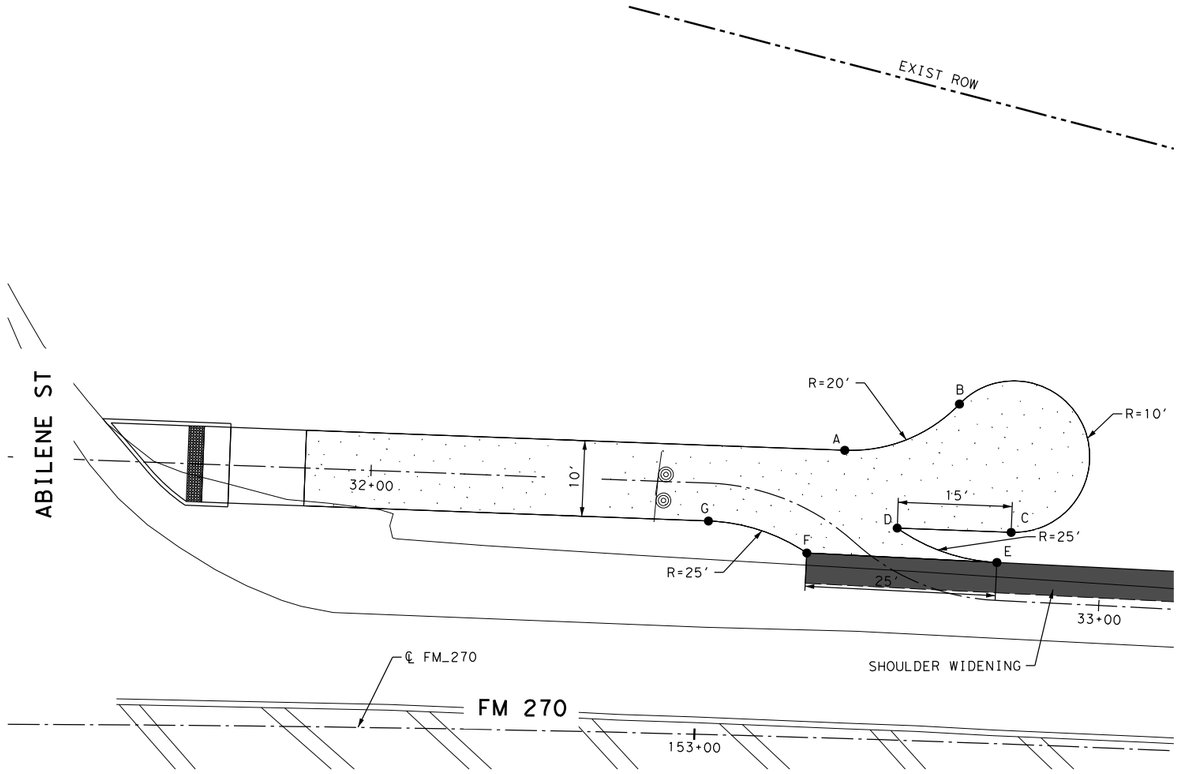

DETAIL A

POINT ID	FM_270 STATION	OFFSET (FT)
A	153+18.68	38.02 L
B	153+33.46	44.62 L
C	153+40.82	27.95 L
D	153+25.87	27.98 L
E	153+39.09	16.41 L
F	153+14.12	24.32 L

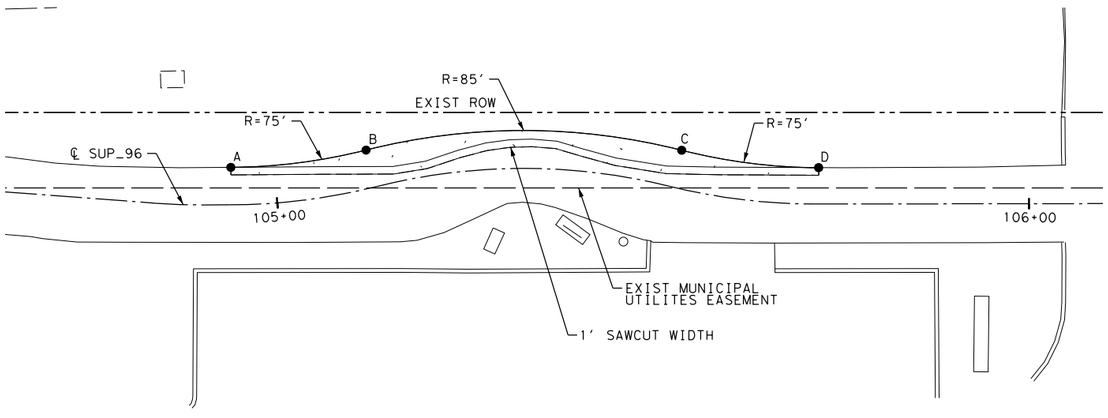

DETAIL B

POINT ID	SUP_96 STATION	OFFSET (FT)
A	104+98.22	4.95 L
B	105+17.46	5.00 L
C	105+57.16	5.00 L
D	105+76.59	4.80 L

NO.	DATE	REVISION	APPROVED

STATE OF TEXAS
JOHANNA TORRES
130063
LICENSED
PROFESSIONAL ENGINEER
johannatorres
8/1/2023

Texas Department of Transportation
©2023

JONES|CARTER
Texas Board of Professional Engineers Registration No. F-23290
4350 Lockhill Selma Rd, Suite 100• San Antonio, Texas 78249•210.494.5511

SH 96, FM 270
MISCELLANEOUS DETAILS

SHEET **01** OF **02**

DRAWN	FED.RD. DIV.NO.	FEDERAL AID PROJECT NO.		HIGHWAY NO.
AA	06			FM 270,ETC
DESIGNED	STATE	DIST.	COUNTY	SHEET NO.
JT	TEXAS	HOUSTON	GALVESTON	
CHECKED	CONT.	SECT.	JOB	159
NG	0912	73	215	
APPROVED				
DD				

PLOTDRIVER: BW_HALF_PDF.PLTCFG PENTABLE:LCBF.tbl
DATE:8/1/2023 8:00:08 PM USER:sss
FILE:c:\bms\pwe101-01\stela.staver-scull\dms22648\LCBF_Miscellaneous Details.dgn

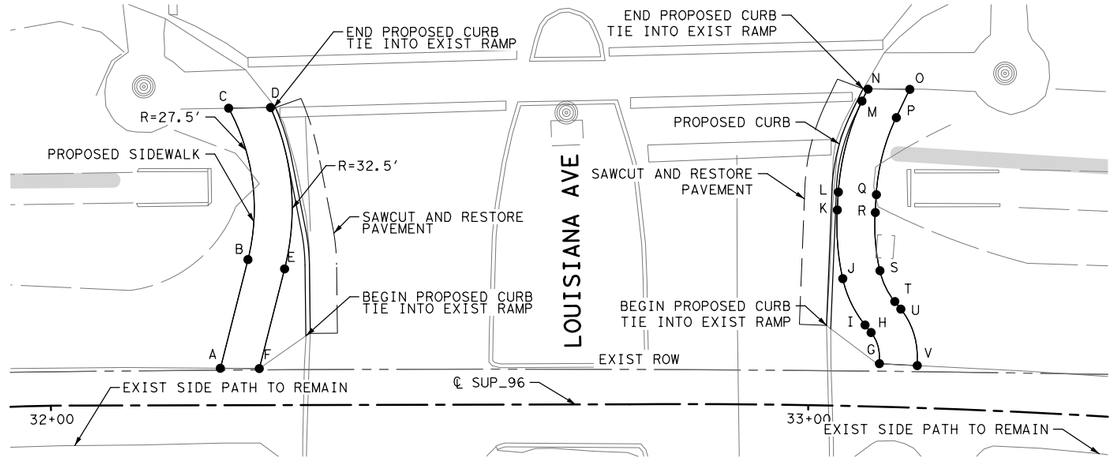

DETAIL C

POINT ID	SUP_96 STATION	OFFSET (FT)
A	32+26.66	4.88 L
B	32+30.33	19.22 L
C	32+27.83	39.21 L
D	32+33.37	39.28 L
E	32+35.17	17.98 L
F	32+31.81	4.83 L
G	33+13.52	5.68 L
H	33+12.32	9.76 L
I	33+11.51	10.73 L
J	33+08.47	16.78 L
K	33+07.58	25.83 L
L	33+07.67	28.18 L
M	33+10.41	40.28 L
N	33+11.11	41.90 L
O	33+16.39	42.02 L
P	33+14.79	38.24 L
Q	33+12.54	28.00 L
R	33+12.44	25.64 L
S	33+13.23	17.98 L
T	33+15.27	13.96 L
U	33+16.08	12.99 L
V	33+18.50	5.57 L

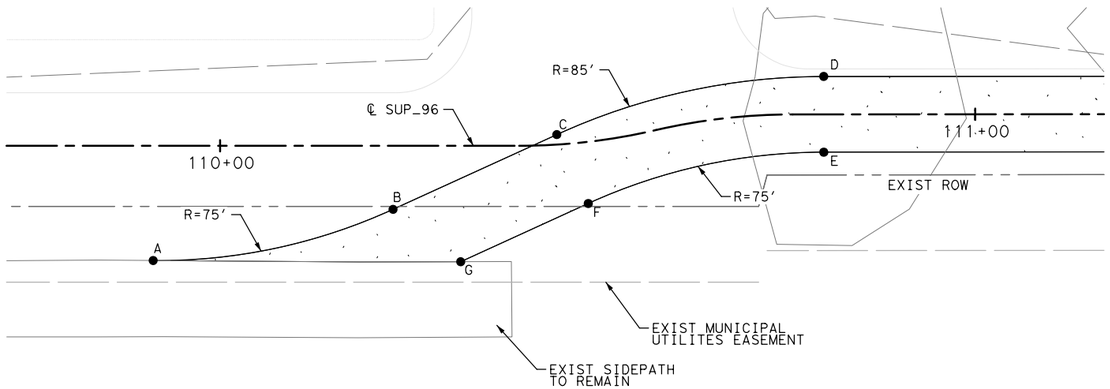

DETAIL D

POINT ID	SUP_96 STATION	OFFSET (FT)
A	109+95.51	15.15 R
B	110+27.22	8.38 R
C	110+48.89	1.31 L
D	110+84.36	5.00 L
E	110+84.36	5.00 R
F	110+52.13	8.10 R
G	110+36.12	15.31 R

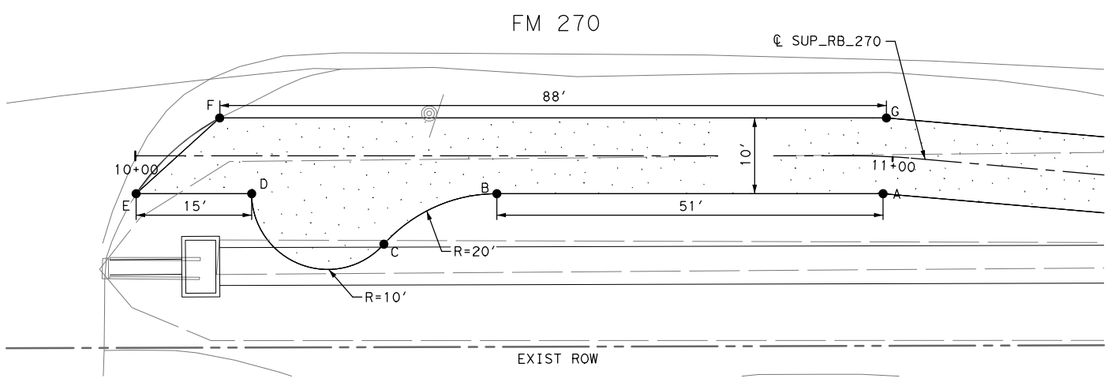

DETAIL E

POINT ID	FM_RB_270 STATION	OFFSET (FT)
A	10+98.93	4.93′ R
B	10+47.72	5.00′ R
C	10+32.81	11.67′ R
D	10+15.36	5.00′ R
E	10+00.09	5.00′ R
F	10+11.15	5.00′ L
G	10+98.93	5.08′ L

NO.	DATE	REVISION	APPROVED

STATE OF TEXAS
JOHANNA TORRES
130063
LICENSED
PROFESSIONAL ENGINEER
johannatorres
8/1/2023

Texas Department of Transportation
©2023

JONES|CARTER
Texas Board of Professional Engineers Registration No. F-23290
4350 Lockhill Selma Rd, Suite 100• San Antonio, Texas 78249 •210.494.5511

SH 96, FM 270
MISCELLANEOUS DETAILS

SHEET **02** OF **02**

DRAWN	FED.RD. DIV.NO.	FEDERAL AID PROJECT NO.		HIGHWAY NO.
AA	06			FM 270,ETC
DESIGNED	STATE	DIST.	COUNTY	SHEET NO.
JT	TEXAS	HOUSTON	GALVESTON	160
CHECKED	CONT.	SECT.	JOB	
NG	0912	73	215	
APPROVED				
DD				

PENTABLE:LCBF.tbl
PLOTDRIVER:LCBF.pltcfg
USER:sss
12:02:46 PM
DATE:8/1/2023
FILE:c:\bms\pwe101-01\stella.staver-scull\dms22648\LCBF_Miscellaneous Details_02.dgn

DISCLAIMER:
The use of this standard is governed by the "Texas Engineering Practice Act". No warranty of any kind is made by TxDOT for any purpose whatsoever. TxDOT assumes no responsibility for the conversion of this standard to other formats or for incorrect results or damages resulting from its use.

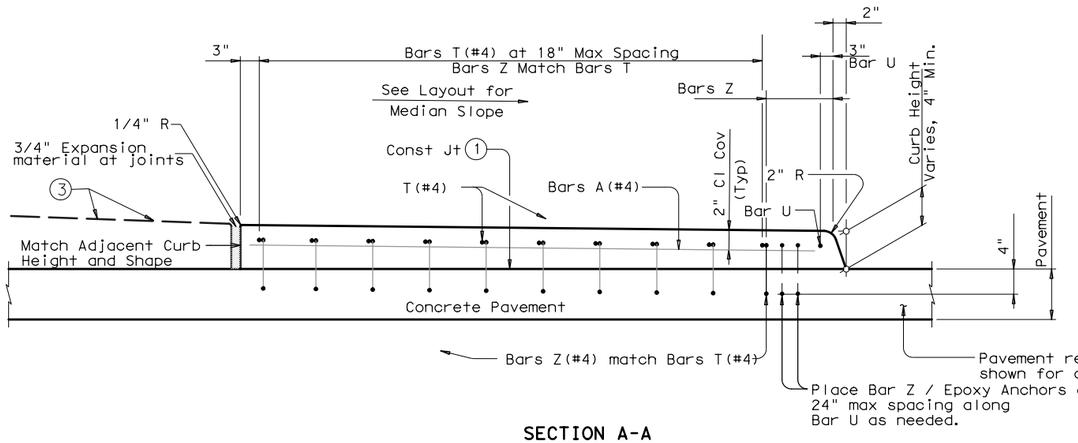

SECTION A-A

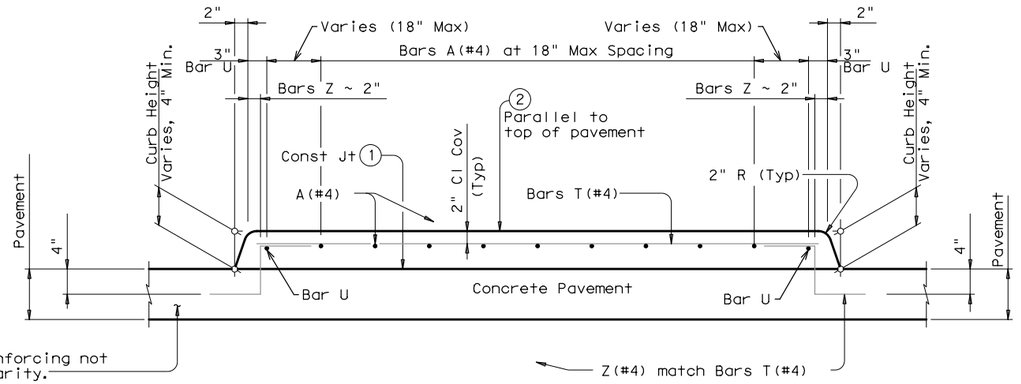

SECTION B-B

1. (1) Provide broom finish to top of pavement where raised median area is defined.
2. (2) Unless noted otherwise on the pavement details.
3. (3) Unless otherwise directed, place concrete riprap over pavement or base. If not over pavement or base, place sod or seed.

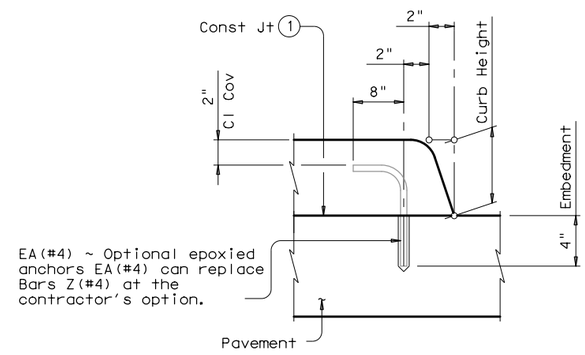

OPTIONAL EPOXY ANCHORS

Embed EA(#4) bar into concrete with a Type III (Class C) epoxy meeting the requirements of DMS-6100,"Epoxies and Adhesives". Follow manufacturer's directions for installing the epoxied anchor bars.

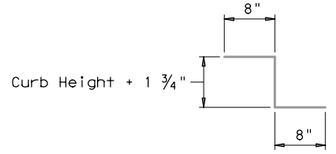

BARS Z(#4)

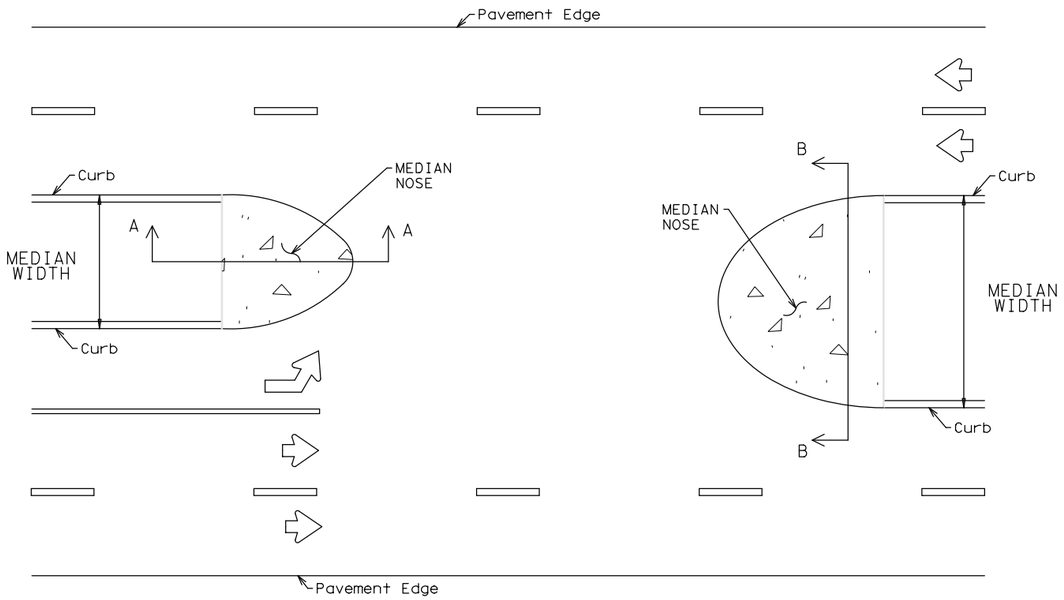

PLAN

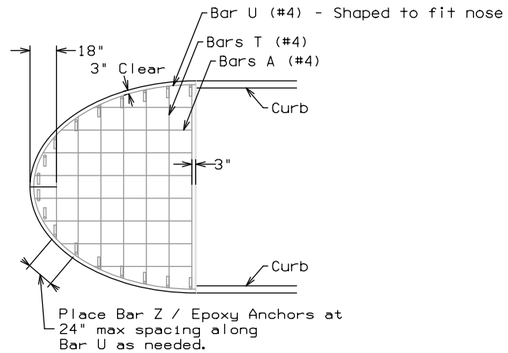

REINFORCING

MATERIAL NOTES:
Provide Grade 60 reinforcement. Welded wire reinforcement (WWR) meeting ASTM A497 of equivalent size and spacing may be substituted for Bars A and Bars T.

Epoxy coat reinforcement if pavement reinforcement is required to be epoxy coated.

DESIGNER NOTES:
Provide Median Slope in Design Layouts.

SHEET 1 OF 1

Texas Department of Transportation
Houston District

MEDIAN NOSE DETAILS

HOU-MEDNS-22

FILE: stdB13.dgn	DN: NHEB	CK: TxDOT	DW: NHEB	CK: TxDOT
©TxDOT FEBRUARY 2022	DISTRICT	PROJECT		SHEET
REVISIONS	HOU			161
02/15 FOR 2014 SPECS 02/23 ADDED NOTE FOR FINISH BEHIND MEDIAN NOSE	COUNTY	CONTROL	SECT	JOB	HIGHWAY
	GALVESTON	0912	73	215	FM 270 ETC

PATH:
LEVELS DISPLAYED
60
1

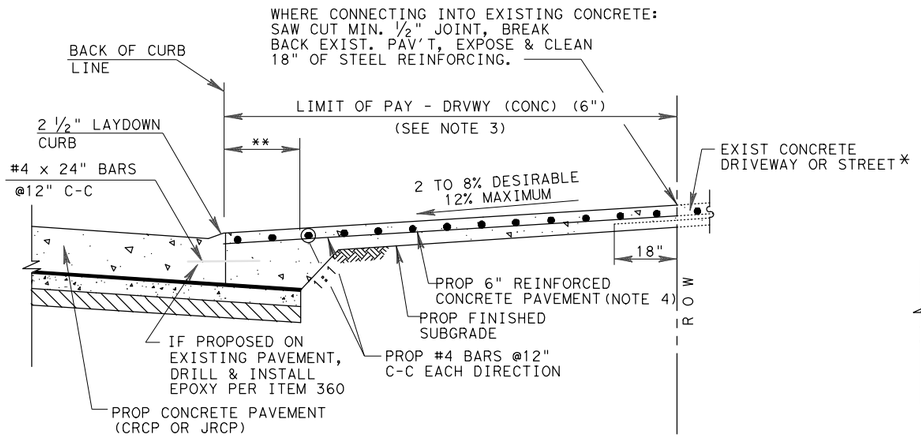

PROPOSED DRIVEWAY DETAIL
REINFORCED CONCRETE AT CONCRETE
CURB AND GUTTER ROADWAY

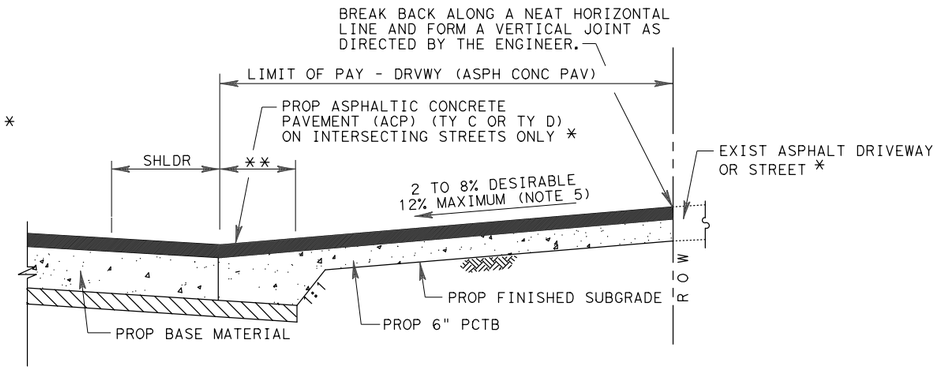

PROPOSED DRIVEWAY DETAIL
ASPHALT W/ PCTB AT ASPHALT ROADWAY

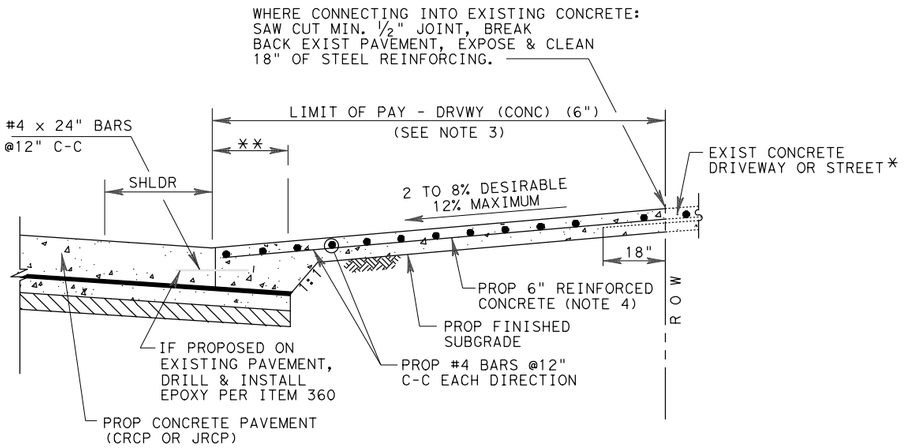

PROPOSED DRIVEWAY DETAIL
REINFORCED CONCRETE AT CONCRETE ROADWAY

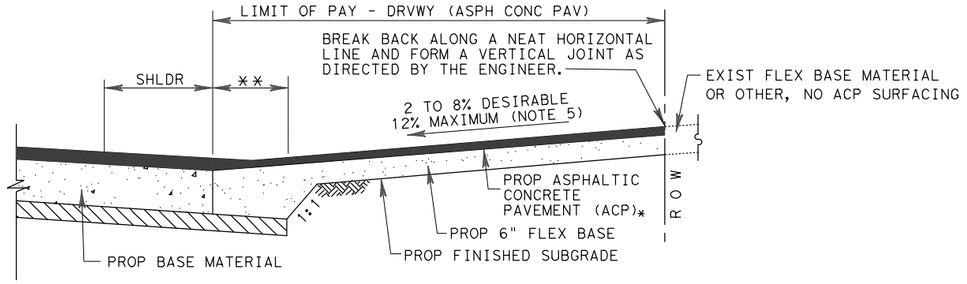

PROPOSED DRIVEWAY DETAIL
ASPHALT W/ FLEX BASE AT ASPHALT ROADWAY

NOTES:

1. ALSO SEE SHEET 2 OF 2 FOR DRIVEWAY SLOPES WITH PROPOSED SIDEWALKS.
2. FOR INTERSECTIONS BUILT WITH CRCP PAVEMENT SEE CRCP DETAIL.
3. FAST TRACK CONCRETE IS PAID AS DRVWY (CONC) (FAST TRACK).
4. THICKNESS OF DRIVEWAY IS 6 INCHES FOR REGULAR AND FAST TRACK CONCRETE.
5. MAXIMUM SLOPE IS: 12% RESIDENTIAL
   8% OTHERS

LEGEND:

PCTB- PORTLAND CEMENT TREATED BASE

JRCP- JOINTED REINFORCED CONCRETE PAVEMENT

CRCP- CONTINUOUSLY REINFORCED CONCRETE PAVEMENT

ACP- ASPHALTIC CONCRETE PAVEMENT

* FOR STREET INTERSECTIONS REFER TO PAVING DETAILS AND INTERSECTION DETAILS FOR REINFORCING STEEL AND SECTION REQUIREMENTS.

** PROPOSED LIMIT OF ROADWAY BASE AND/OR SUBGRADE

Texas Department of Transportation
Houston District

DRIVEWAY DETAILS

DD

FILE: STDB-8a.dgn	DN:	CK:	DW:	CK:		
© TxDOT SEPT. 2004	DIST	FED REG	PROJECT NO.			SHEET
REVISIONS 11/15 ADDED NOTE FOR PCTB 3/17 MODIFIED PAVEMENT SLOPES	HOU	6				162
	COUNTY		CONTROL	SECT	JOB	HIGHWAY
	GALVESTON		0912	73	215	FM 270 ETC

STDB8A

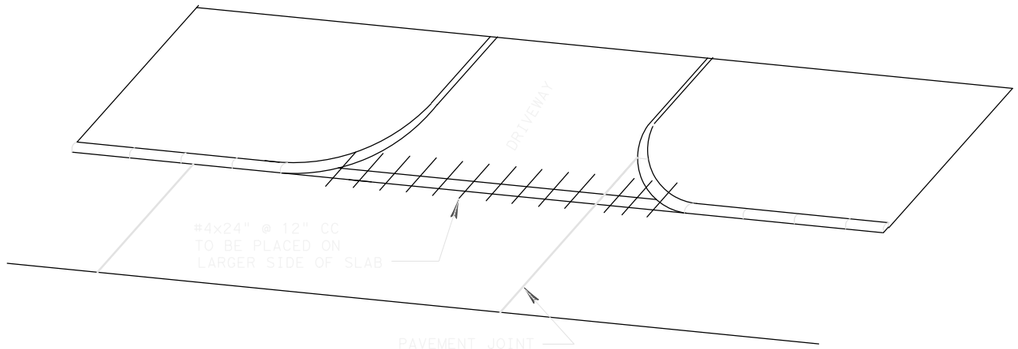

TIE BAR PLACEMENT WITH JRCP

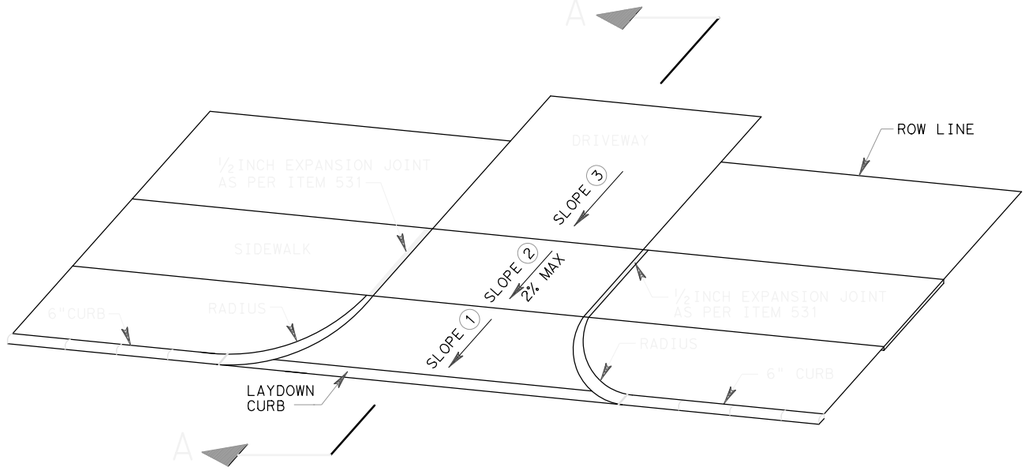

SIDEWALK OFFSET FROM CURB DETAILS

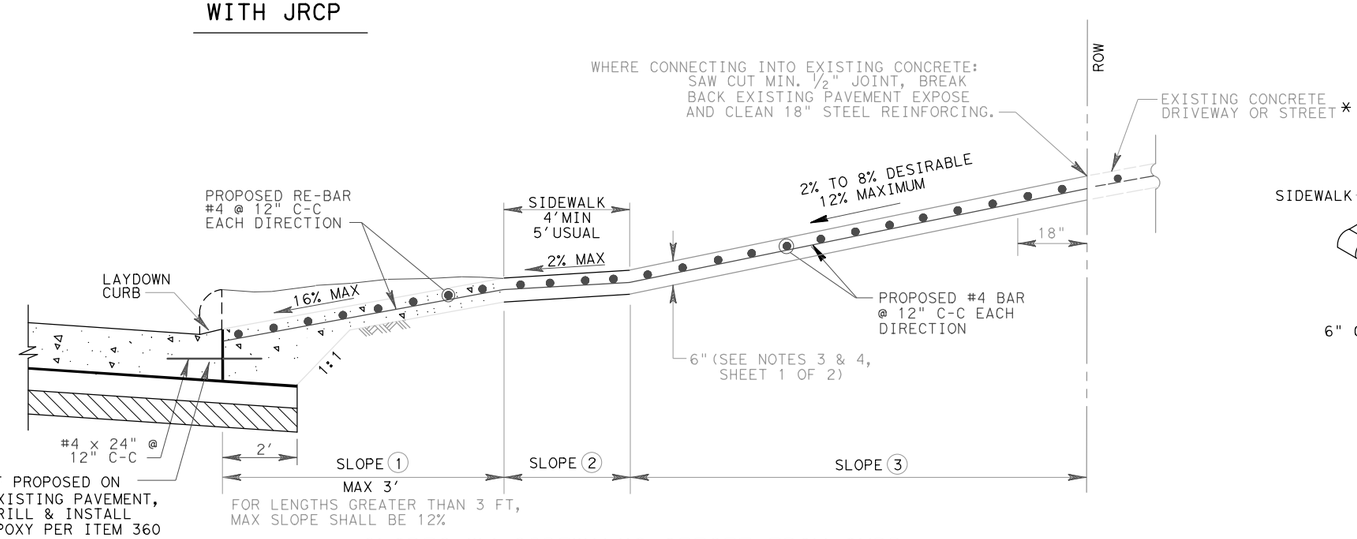

SLOPES W/ SIDEWALKS OFFSET FROM CURB (SECTION A-A)

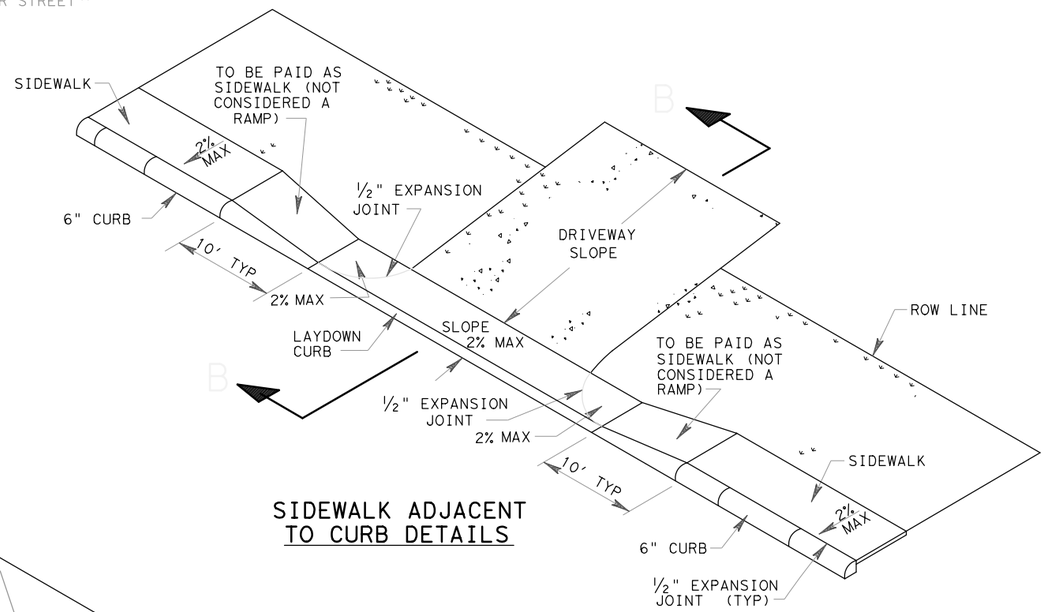

SIDEWALK ADJACENT TO CURB DETAILS

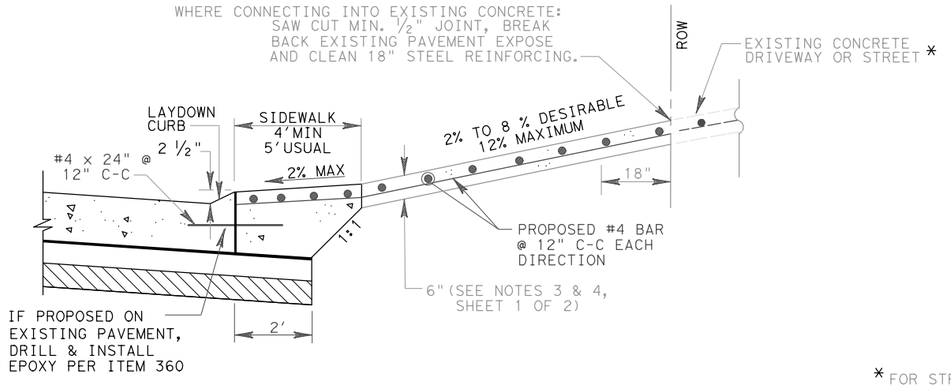

DRIVEWAY SLOPES W/ SIDEWALKS ADJACENT TO CURB (SECTION B-B)

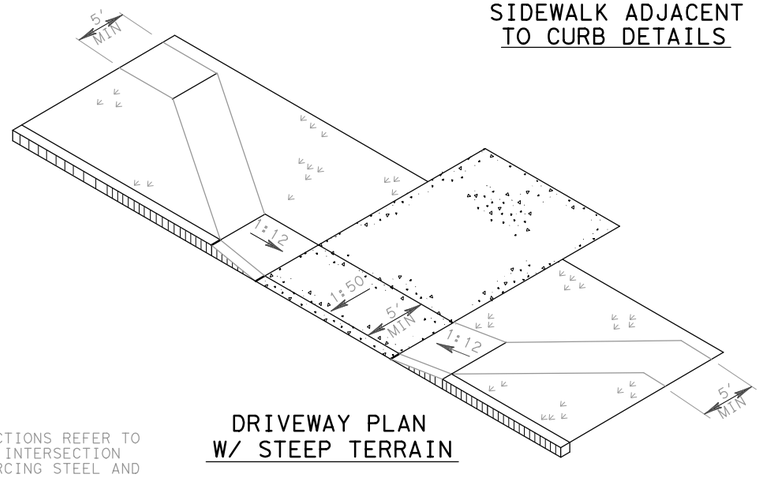

DRIVEWAY PLAN W/ STEEP TERRAIN

* FOR STREET INTERSECTIONS REFER TO PAVING DETAILS AND INTERSECTION DETAILS FOR REINFORCING STEEL AND SECTION REQUIREMENTS.

Texas Department of Transportation
Houston District

DRIVEWAY DETAILS

DD

FILE: STDB-8b.dgn	DN:	CK:	DW:	CK:	
© TxDOT SEPT. 2004	DIST	FED REG	PROJECT NO.		SHEET
REVISIONS	HOU	6			163
9/09 ADDED NOTE FOR ITEM 360.	COUNTY		CONTROL	SECT	JOB	HIGHWAY
11/15 ADDED NOTE FOR PCTB	GALVESTON		0912	73	215	FM 270 ETC

STDB8B

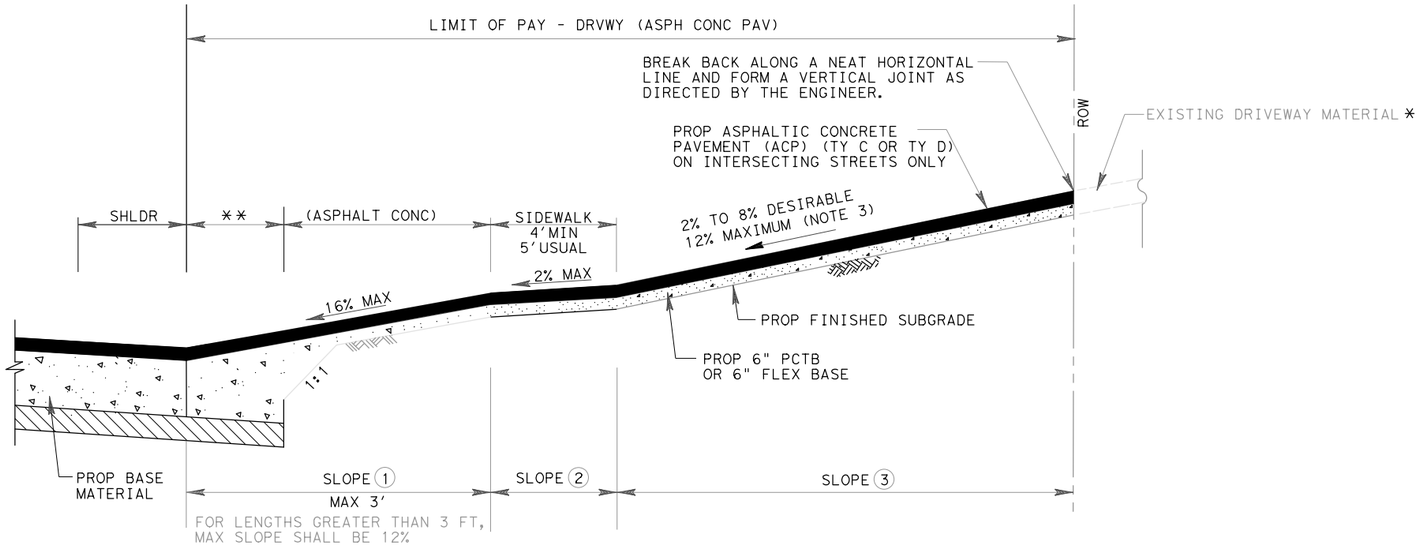

PROPOSED DRIVEWAY SLOPES
WITH SIDEWALKS OFFSET

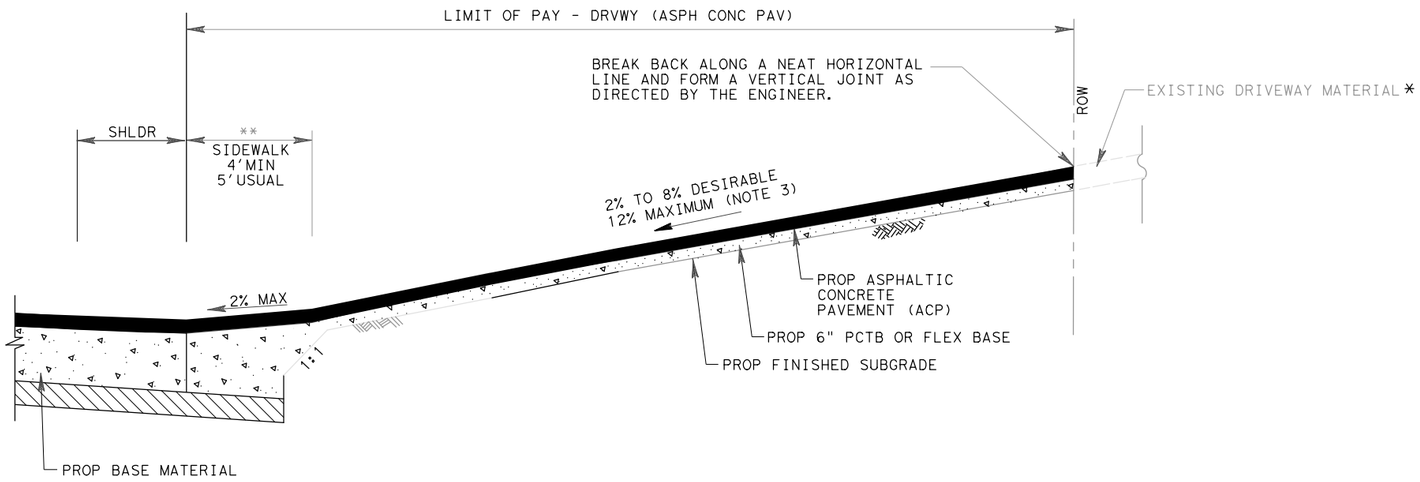

PROPOSED DRIVEWAY SLOPES
WITH SIDEWALKS ADJACENT

NOTES:

1. ALSO SEE SHEET 2 OF 3 FOR DRIVEWAY SLOPES WITH PROPOSED SIDEWALKS.
2. FOR INTERSECTIONS BUILT WITH CRCP PAVEMENT SEE CRCP DETAIL.
3. MAXIMUM SLOPE IS: 12% RESIDENTIAL 8% OTHERS

LEGEND:

PCTB- PORTLAND CEMENT TREATED BASE

ACP- ASPHALTIC CONCRETE PAVEMENT

* FOR STREET INTERSECTIONS REFER TO PAVING DETAILS AND INTERSECTION DETAILS.

** PROPOSED LIMIT OF ROADWAY BASE AND/OR SUBGRADE

Texas Department of Transportation
Houston District

DRIVEWAY DETAILS

DD

FILE: STDB-8c.dgn	DN:	CK:	DW:	CK:	
© TxDOT SEPT. 2004	DIST	FED REG	PROJECT NO.		SHEET
REVISIONS 11/15 ADDED NOTE FOR PCTB 3/17 MODIFIED PAVEMENT SLOPES	HOU	6			164
	COUNTY	CONTROL	SECT	JOB	HIGHWAY
	GALVESTON	0912	73	215	FM 270 ETC

STDB8C

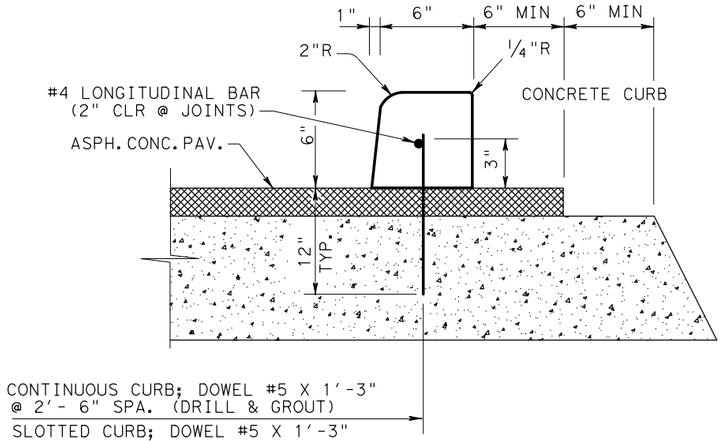

SHOWN ON EXISTING OR PROPOSED ACP PAVEMENT

(PAY ITEM 529-6011) - FOR CONTINUOUS

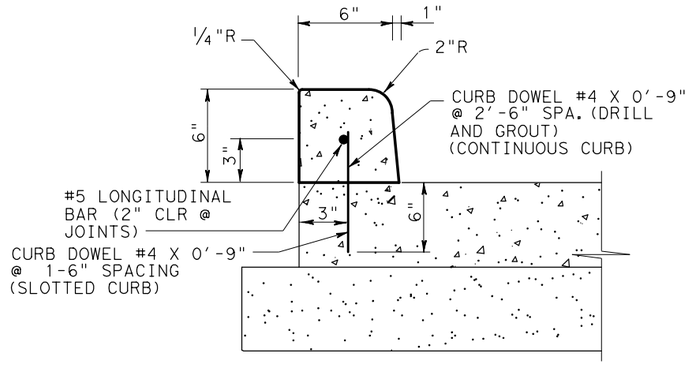

SHOWN ON EXISTING OR PROPOSED CONCRETE PAVEMENT

(PAY ITEM 529-6011) - FOR CONTINUOUS

CONCRETE CURB (DOWEL) (6 IN.)

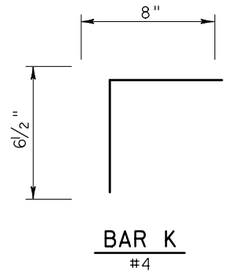

BAR K

#4

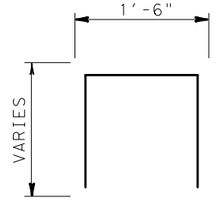

BAR J

#4

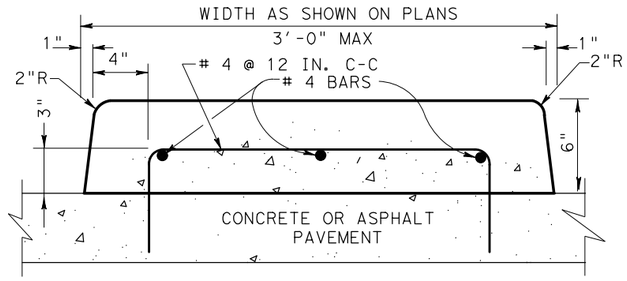

ITEM 536-6001 CONCRETE MEDIAN
SEE NOTE 2

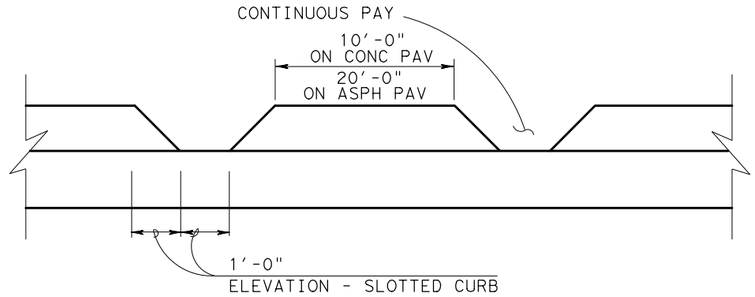

ITEM 529-6012 CONCRETE CURB (SLOTTED) - ON CONC.

ITEM 529-6009 CONC CURB (DOWEL)(SLOTTED) - ON ASPH.

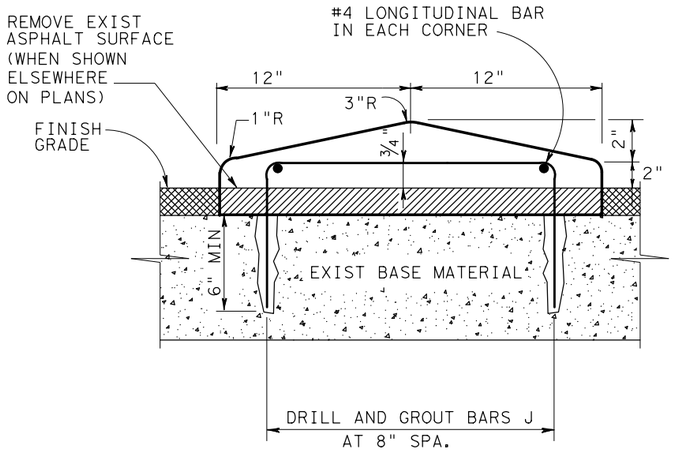

SHOWN ON EXISTING ACP PAVEMENT

SEE NOTE 2 - ITEM 536-6003 CONC DIRECTIONAL ISLAND

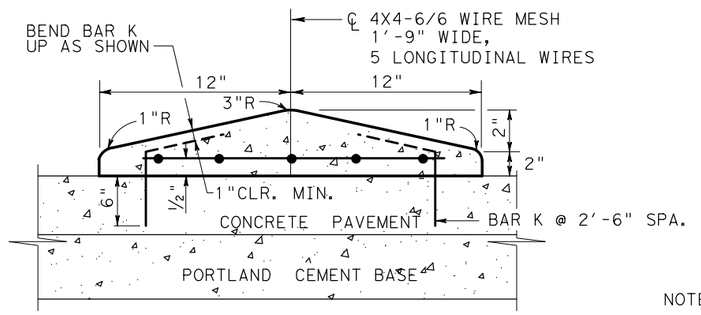

SHOWN ON EXISTING OR PROPOSED CONCRETE PAVEMENT

SEE NOTE 2 - ITEM 536-6003 CONC DIRECTIONAL ISLAND

CONCRETE DIRECTIONAL ISLAND

NOTES:

1. DRILL AND GROUT BARS SHOWN AS PER ITEM 420.4.7.10, 6" EMBEDMENT, MINIMUM ON CONC.
2. INSTALL A 2 INCH DRAINAGE OPENING AT 10 FT C-C WHEN CURB/ISLAND IS NOT ON TOP OF CROSS SECTION. (LOCATED ON A 2 OR 3 PERCENT TRANSVERSE GRADE, OR SUPERELEVATION.)

Texas Department of Transportation
Houston District

CONCRETE CURB AND DIRECTIONAL ISLAND DETAILS CC & DID

FILE: STDB-9.dgn	DN:	CK:	DW:	CK:
©TxDOT 2014	DIST	FED REG	PROJECT NO.	SHEET
REVISIONS	HOU	6		165
	COUNTY	CONTROL	SECT	JOB	HIGHWAY
	GALVESTON	0912	73	215	FM 270 ETC

DISCLAIMER:
The use of this standard is governed by the "Texas Engineering Practice Act". No warranty of any kind is made by TxDOT for any purpose whatsoever. TxDOT assumes no responsibility for the conversion of this standard to other formats or for incorrect results or damages resulting from its use.

DATE: 8/1/2023
FILE: $FILE$

TYPE 1

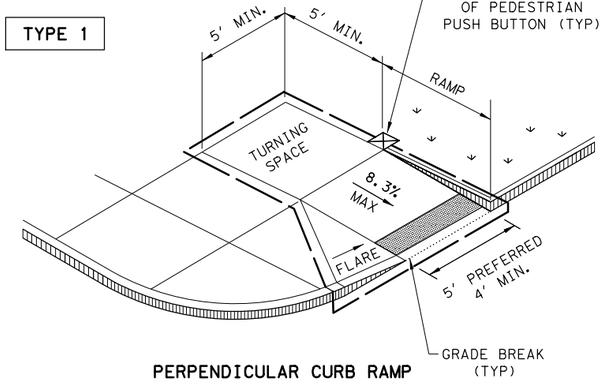

PERPENDICULAR CURB RAMP

TYPE 2

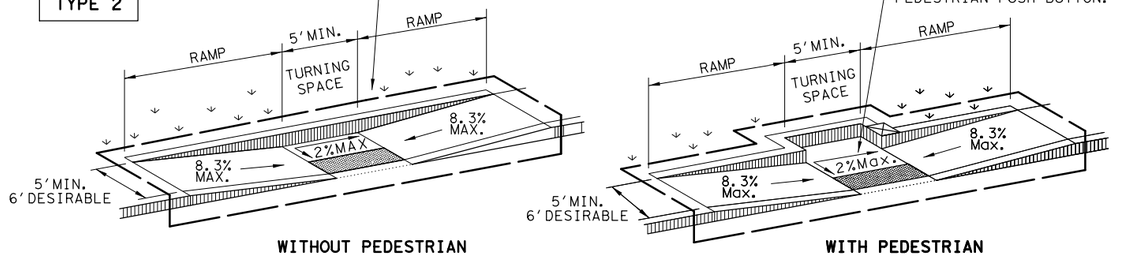

WITHOUT PEDESTRIAN PUSH BUTTON

WITH PEDESTRIAN PUSH BUTTON

PARALLEL CURB RAMP

TYPE 3

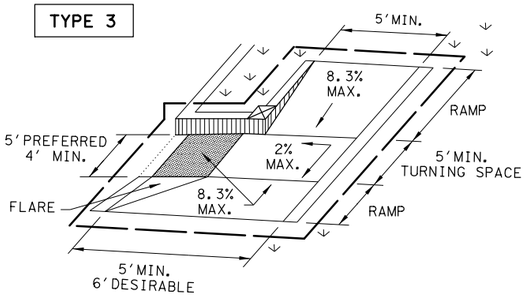

TYPE 6

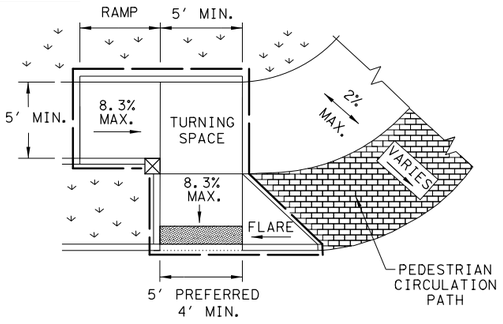

COMBINATION CURB RAMPS

TYPE 20

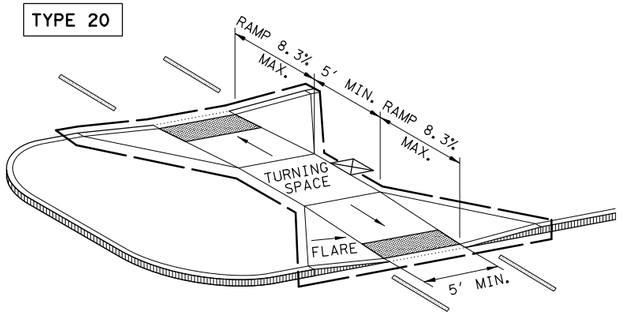

CURB RAMPS AT MEDIAN ISLANDS

TYPE 7

(SIDEWALK SET BACK FROM CURB)

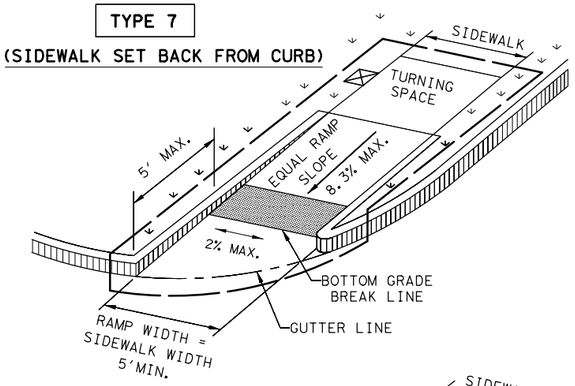

CROSS SLOPE NOT TO EXCEED 2% ON ANY PORTION OF RAMP, TURNING SPACE OR TRANSITION TO STREET.

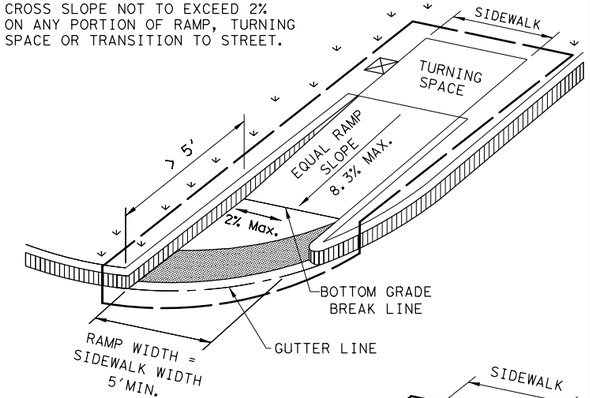

TYPE 10

(SIDEWALK ADJACENT TO CURB)

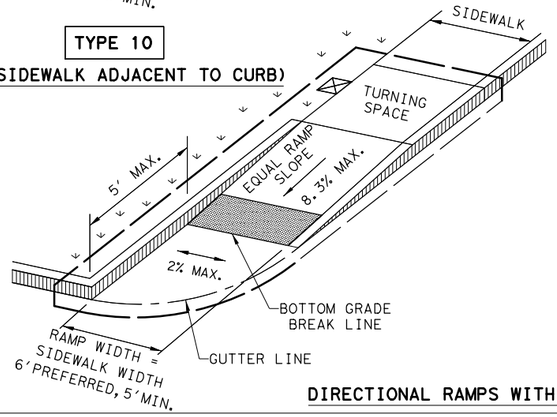

CROSS SLOPE NOT TO EXCEED 2% ON ANY PORTION OF RAMP, TURNING SPACE OR TRANSITION TO STREET.

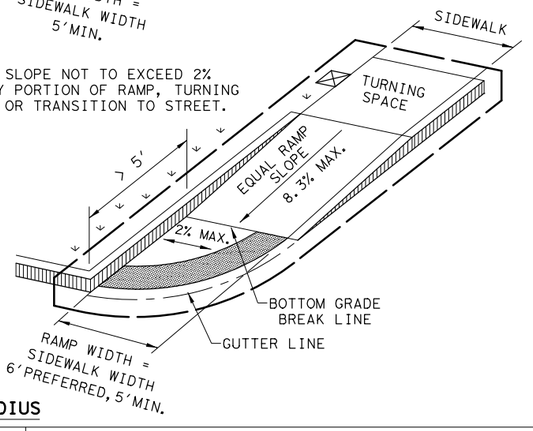

DIRECTIONAL RAMPS WITHIN RADIUS

TYPE 5

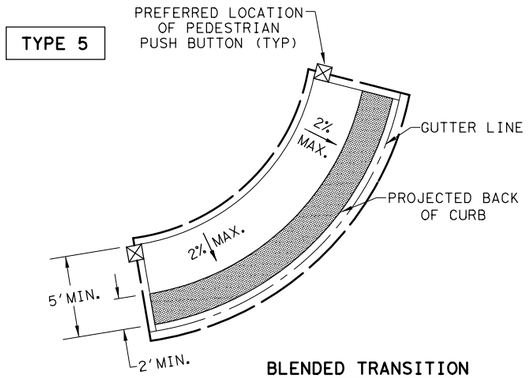

BLENDED TRANSITION
(FLUSH LANDING)

TYPE 21

INSTALL DETECTABLE WARNING SURFACE AT EACH END OF THE CUT-THROUGH RAMP WITH A MINIMUM 2' USUAL SIDEWALK SURFACE BETWEEN. IF MEDIAN IS LESS THAN 6' WIDE, ELIMINATE DETECTABLE WARNING SURFACES.

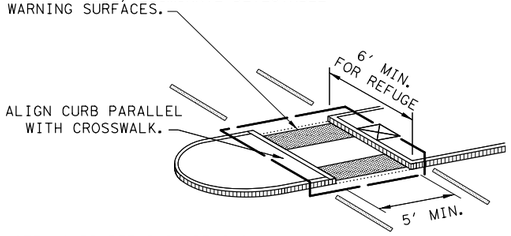

NOTE: CURB DETAILS ARE SHOWN ELSEWHERE IN THE PLANS.

TYPE 22

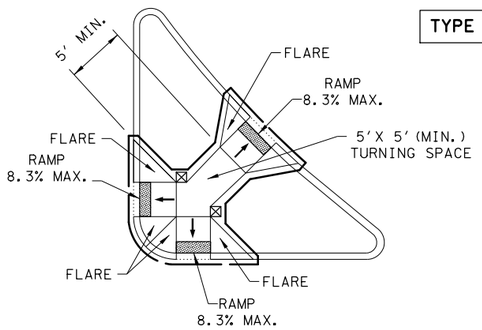

COMBINATION ISLAND RAMPS

BOTTOM GRADE BREAK OF CURB RAMP WILL NORMALLY BE AT GUTTER LINE. SURFACE SLOPES AT GRADE BREAKS SHALL BE FLUSH.

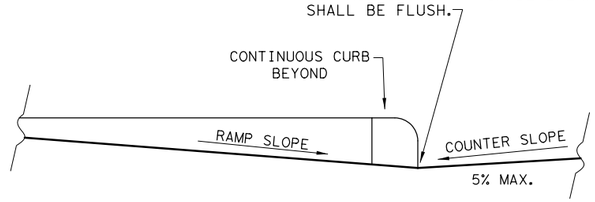

TYPICAL SECTION OF PERPENDICULAR CURB RAMP AT CONNECTION TO ROADWAY

NOTES / LEGEND:

SEE GENERAL NOTES ON SHEET 2 OF 4 FOR MORE INFORMATION.

DENOTES PLANTING OR NON-WALKING SURFACE NOT PART OF PEDESTRIAN CIRCULATION PATH.

DETECTABLE WARNING SURFACE

DENOTES PREFERRED LOCATION OF PEDESTRIAN PUSH BUTTON IF APPLICABLE.

GUTTER LINE

GRADE BREAK

RAMP LIMITS OF PAYMENT

Texas Department of Transportation

Design Division Standard

PEDESTRIAN FACILITIES CURB RAMPS

PED-18

FILE: ped18	DN: TxDOT	DW: VP	CK: KM	CK: PK & JG
© TxDOT: MARCH, 2002	CONT	SECT	JOB	HIGHWAY
REVISIONS	0912	73	215	FM 270, ETC
REVISED 08,2005 REVISED 06,2012 REVISED 01,2018	DIST	COUNTY		SHEET NO.
	HOU	GALVESTON		166

DISCLAIMER:
The use of this standard is governed by the "Texas Engineering Practice Act". No warranty of any kind is made by TxDOT for any purpose whatsoever. TxDOT assumes no responsibility for the conversion of this standard to other formats or for incorrect results or damages resulting from its use.

DATE: 8/11/2023
FILE: $FILE$

GENERAL NOTES

CURB RAMPS

1. Install a curb ramp or blended transition at each pedestrian street crossing.
2. All slopes shown are maximum allowable. Cross slopes of 1.5% and lesser running should be used. Adjust curb ramp length or grade of approach sidewalks as directed.
3. Maximum allowable cross slope on sidewalk and curb ramp surfaces is 2%.
4. The minimum sidewalk width is 5′. Where the sidewalk is adjacent to the back of curb, a 6′ sidewalk width is desirable. Where a 5′ sidewalk cannot be provided due to site constraints, sidewalk width may be reduced to 4′ for short distances. 5′x 5′ passing areas at intervals not to exceed 200′ are required.
5. Turning Spaces shall be 5′x 5′ minimum. Cross slope shall be maximum 2%.
6. Clear space at the bottom of curb ramps shall be a minimum of 4′x 4′ wholly contained within the crosswalk and wholly outside the parallel vehicular travel path.
7. Provide flared sides where the pedestrian circulation path crosses the curb ramp. Flared sides shall be sloped at 10% maximum, measured parallel to the curb. Returned curbs may be used only where pedestrians would not normally walk across the ramp, either because the adjacent surface is planted, substantially obstructed, or otherwise protected.
8. Additional information on curb ramp location, design, light reflective value and texture may be found in the latest draft of the Proposed Guidelines for Pedestrian Facilities in the Public Right of Way (PROWAG) as published by the U.S. Architectural and Transportation Barriers Compliance Board (Access Board).
9. To serve as a pedestrian refuge area, the median should be a minimum of 6′ wide, measured from back of curbs. Medians should be designed to provide accessible passage over or through them.
10. Small channelization islands, which do not provide a minimum 5′x 5′ landing at the top of curb ramps, shall be cut through level with the surface of the street.
11. Crosswalk dimensions, crosswalk markings and stop bar locations shall be as shown elsewhere in the plans. At intersections where crosswalk markings are not required, curb ramps shall align with theoretical crosswalks unless otherwise directed.
12. Provide curb ramps to connect the pedestrian access route at each pedestrian street crossing. Handrails are not required on curb ramps.
13. Curb ramps and landings shall be constructed and paid for in accordance with Item 531 "Sidewalks".
14. Place concrete at a minimum depth of 5" for ramps, flares and landings, unless otherwise directed.
15. Furnish and install No. 3 reinforcing steel bars at 18" o.c. both ways, unless otherwise directed.
16. Provide a smooth transition where the curb ramps connect to the street.
17. Curbs shown on sheet 1 within the limits of payment are considered part of the curb ramp for payment, whether it is concrete curb, gutter, or combined curb and gutter.
18. Existing features that comply with applicalble standards may remain in place unless otherwise shown on the plans.

DETECTABLE WARNING MATERIAL

19. Curb ramps must contain a detectable warning surface that consists of raised truncated domes complying with PROWAG. The surface must contrast visually with adjoining surfaces, including side flares. Furnish and install an approved cast-in-place dark brown or dark red detectable warning surface material adjacent to uncolored concrete, unless specified elsewhere in the plans.
20. Detectable Warning Materials must meet TxDOT Departmental Materials Specification DMS 4350 and be listed on the Material Producer List. Install products in accordance with manufacturer's specifications.
21. Detectable warning surfaces must be firm, stable and slip resistant.
22. Detectable warning surfaces shall be a minimum of 24 inches in depth in the direction of pedestrian travel, and extend the full width of the curb ramp or landing where the pedestrian access route enters the street.
23. Detectable warning surfaces shall be located so that the edge nearest the curb line is at the back of curb and neither end of that edge is greater than 5 feet from the back of curb. Detectable warning surfaces may be curved along the corner radius.
24. Shaded areas on Sheet 1 of 4 indicate the approximate location for the detectable warning surface for each curb ramp type.

DETECTABLE WARNING PAVERS (IF USED)

25. Furnish detectable warning paver units meeting all requirements of ASTM C-936, C-33. Lay in a two by two unit basket weave pattern or as directed.
26. Lay full-size units first followed by closure units consisting of at least 25 percent (25%) of a full unit. Cut detectable warning paver units using a power saw.

SIDEWALKS

27. Provide clear ground space at operable parts, including pedestrian push buttons. Operable parts shall be placed within unobstructed reach range specified in PROWAG section R406.
28. Place traffic signal or illumination poles, ground boxes, controller boxes, signs, drainage facilities and other items so as not to obstruct the pedestrian access route or clear ground space.
29. Street grades and cross slopes shall be as shown elsewhere in the plans.
30. Changes in level greater than 1/4 inch are not permitted.
31. The least possible grade should be used to maximize accessibility. The running slope of sidewalks and crosswalks within the public right of way may follow the grade of the parallel roadway. Where a continuous grade greater than five percent (5%) must be provided, handrails may be desirable to improve accessibility. Handrails may also be needed to protect pedestrians from potentially hazardous conditions. If provided, handrails shall comply with PROWAG R409.
32. Handrail extensions shall not protrude into the usable landing area or into intersecting pedestrian routes.
33. Driveways and turnouts shall be constructed and paid for in accordance with Item "Intersections, Driveways and Turnouts". Sidewalks shall be constructed and paid for in accordance with Item, "Sidewalks".
34. Sidewalk details are shown elsewhere in the plans.

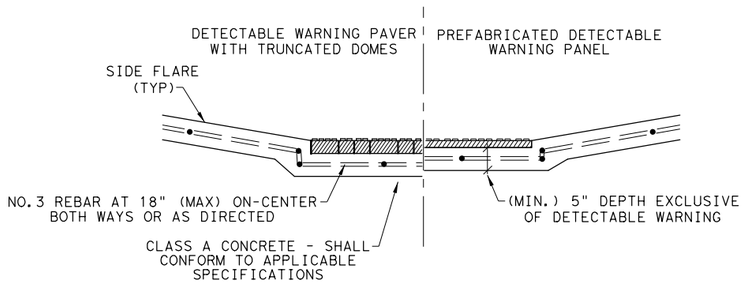

SECTION VIEW DETAIL
CURB RAMP AT DETECTIBLE WARNINGS

DETECTABLE WARNING SURFACE DETAILS

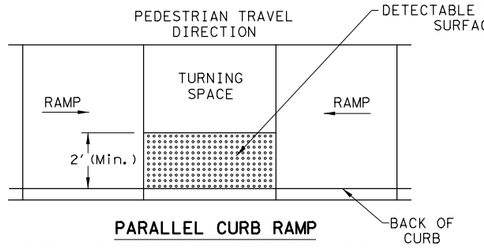

PARALLEL CURB RAMP
TYPICAL PLACEMENT OF DETECTABLE WARNING SURFACE ON LANDING AT STREET EDGE.

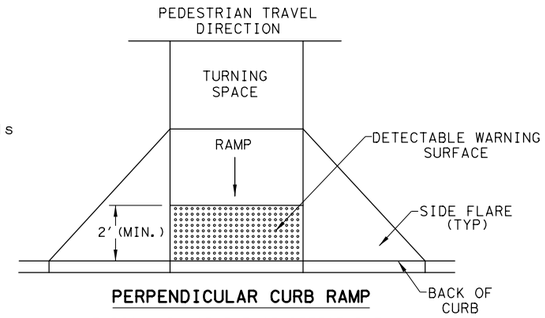

PERPENDICULAR CURB RAMP
TYPICAL PLACEMENT OF DETECTABLE WARNING SURFACE ON SLOPING RAMP RUN.

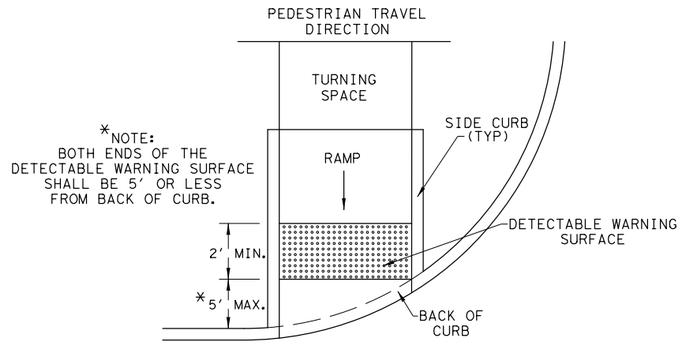

DIRECTIONAL CURB RAMP
TYPICAL PLACEMENT OF DETECTABLE WARNING SURFACE ON SLOPING RAMP RUN.

Texas Department of Transportation

Design Division Standard

PEDESTRIAN FACILITIES CURB RAMPS

PED-18

FILE: ped18	DN: TxDOT		DW: VP	CK: KM	CK: PK & JG
© TxDOT: MARCH, 2002	CONT	SECT	JOB		HIGHWAY
REVISIONS	0912	73	215		FM 270, ETC
REVISED 08,2005 REVISED 06,2012 REVISED 01,2018	DIST	COUNTY			SHEET NO.
	HOU	GALVESTON			167

DISCLAIMER:
The use of this standard is governed by the "Texas Engineering Practice Act". No warranty of any kind is made by TxDOT for any purpose whatsoever. TxDOT assumes no responsibility for the conversion of this standard to other formats or for incorrect results or damages resulting from its use.

DATE: 8/1/2023
FILE: $FILE$

SIDEWALK TREATMENT AT DRIVEWAYS

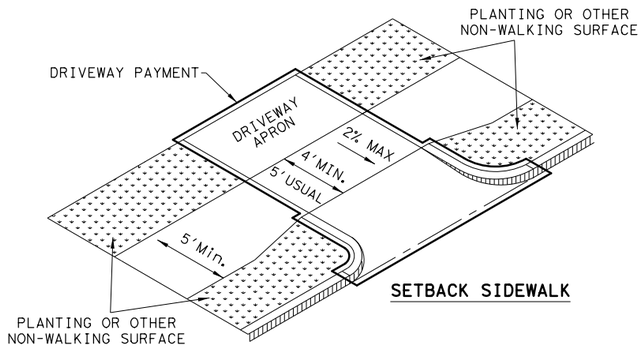

SETBACK SIDEWALK

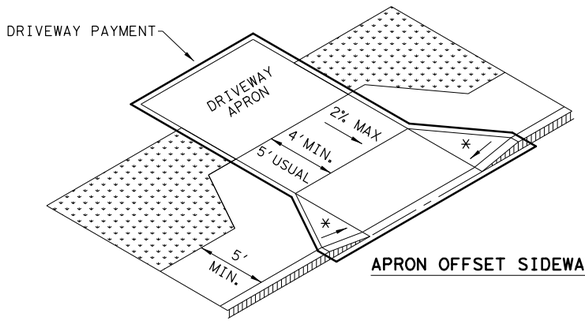

APRON OFFSET SIDEWALK

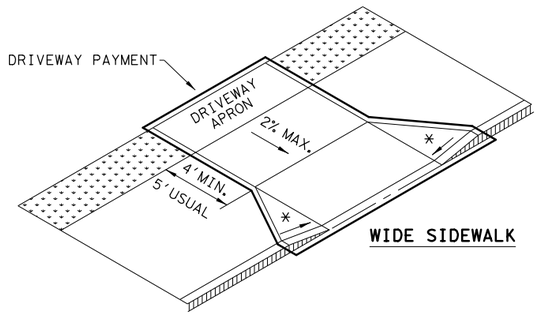

WIDE SIDEWALK

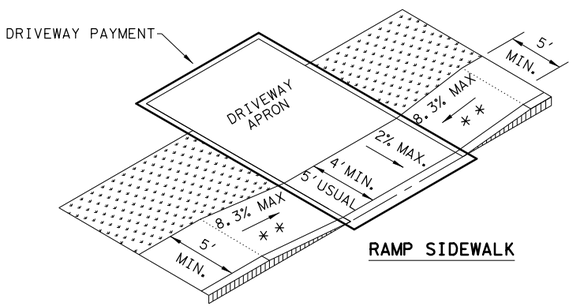

RAMP SIDEWALK

NOTES:

* WHERE DRIVEWAYS CROSS THE PEDESTRIAN ROUTE, SIDES SHALL BE FLARED AT 10% MAX SLOPE.

* * IF CURB HEIGHT IS GREATER THAN 6 INCHES, USE GRADE LESS THAN OR EQUAL TO 5%. HANDRAIL AND DETECTABLE WARNING ARE NOT REQUIRED.

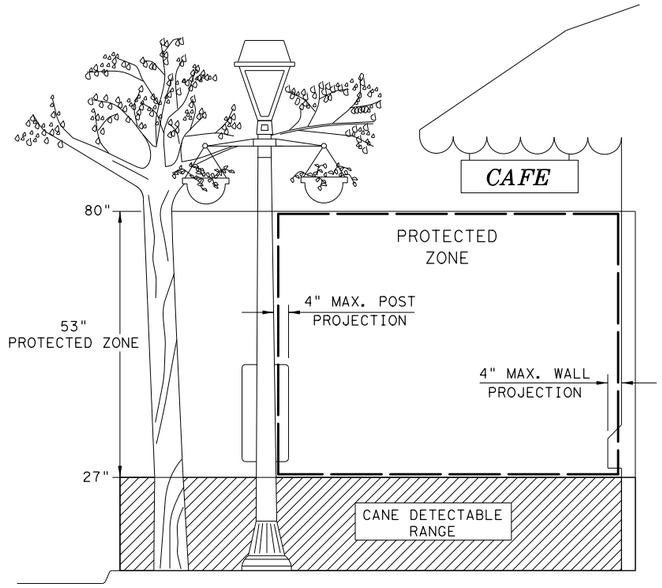

PROTECTED ZONE

NOTE: IN PEDESTRIAN CIRCULATION AREA, MAXIMUM 4" PROJECTION FOR POST OR WALL MOUNTED OBJECTS BETWEEN 27" AND 80" ABOVE THE SURFACE.

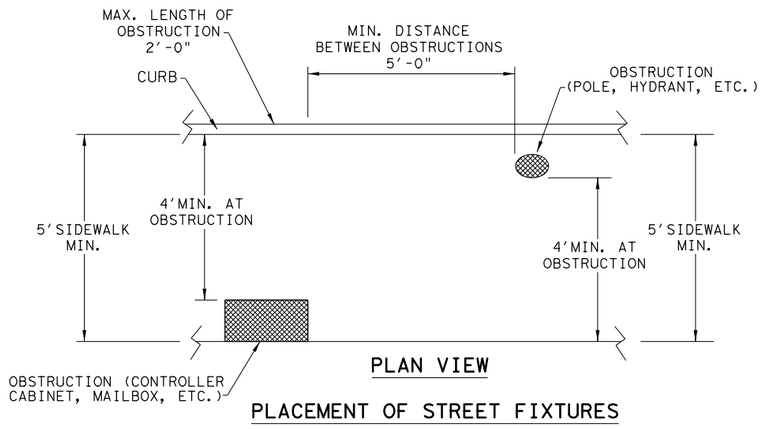

PLAN VIEW

PLACEMENT OF STREET FIXTURES

NOTE: ITEMS NOT INTENDED FOR PUBLIC USE. MINIMUM 4' X 4' CLEAR GROUND SPACE REQUIRED AT PUBLIC USE FIXTURES.

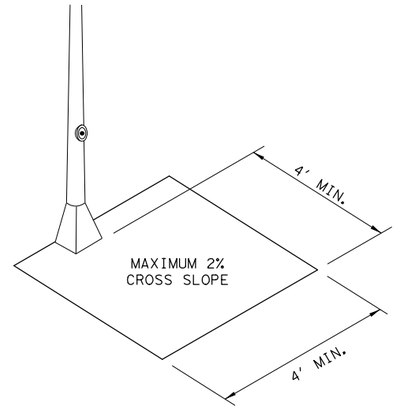

CLEAR SPACE ADJACENT TO PEDESTRIAN PUSH BUTTON

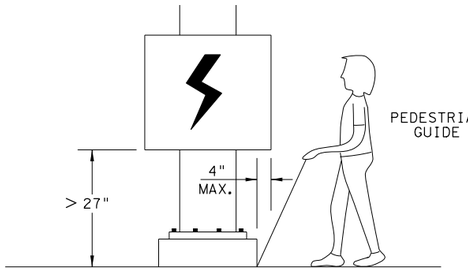

WHEN AN OBSTRUCTION OF A HEIGHT GREATER THAN 27" FROM THE SURFACE WOULD CREATE A PROTRUSION OF MORE THAN 4" INTO THE PEDESTRIAN CIRCULATION AREA, CONSTRUCT ADDITIONAL CURB OR FOUNDATION AT THE BOTTOM TO PROVIDE A MAXIMUM 4" OVERHANG.

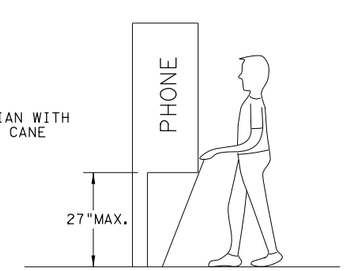

PROTRUDING OBJECTS OF A HEIGHT ≤ 27" ARE DETECTABLE BY CANE AND DO NOT REQUIRE ADDITIONAL TREATMENT.

DETECTION BARRIER FOR VERTICAL CLEARANCE < 80"

Texas Department of Transportation

Design Division Standard

PEDESTRIAN FACILITIES CURB RAMPS

PED-18

FILE: ped18	DN: TxDOT		DW: VP	CK: KM	CK: PK & JG
© TxDOT: MARCH, 2002	CONT	SECT	JOB		HIGHWAY
REVISIONS	0912	73	215		FM 270, ETC
REVISED 08,2005 REVISED 06,2012 REVISED 01,2018	DIST	COUNTY			SHEET NO.
	HOU	GALVESTON			168

DISCLAIMER:
The use of this standard is governed by the "Texas Engineering Practice Act". No warranty of any kind is made by TxDOT for any purpose whatsoever. TxDOT assumes no responsibility for the conversion of this standard to other formats or for incorrect results or damages resulting from its use.

DATE: 8/1/2023
FILE: $FILE$

TYPICAL CROSSING LAYOUTS

SEE SHEET 1 OF 4 FOR DETAILS AND DIMENSIONS

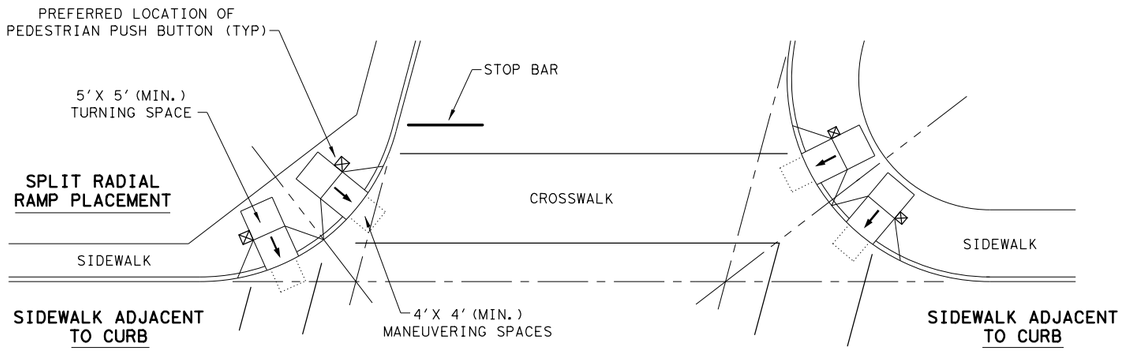

SKEWED INTERSECTION WITH "LARGE" RADIUS

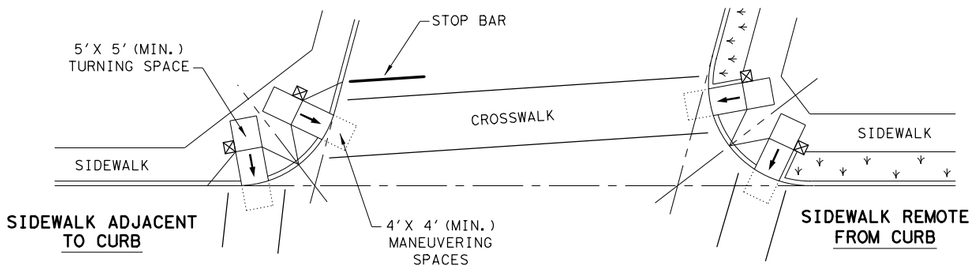

SKEWED INTERSECTION WITH "SMALL" RADIUS

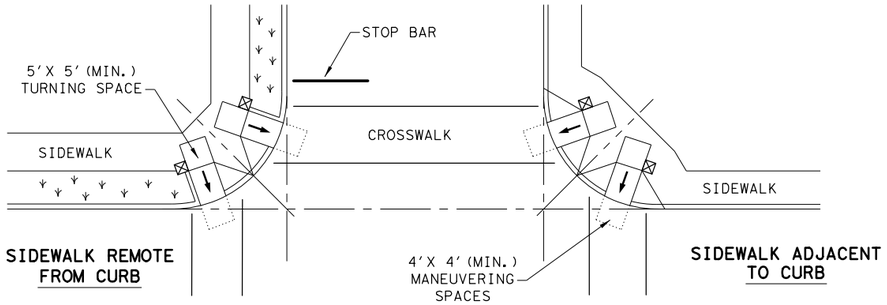

NORMAL INTERSECTION WITH "SMALL" RADIUS

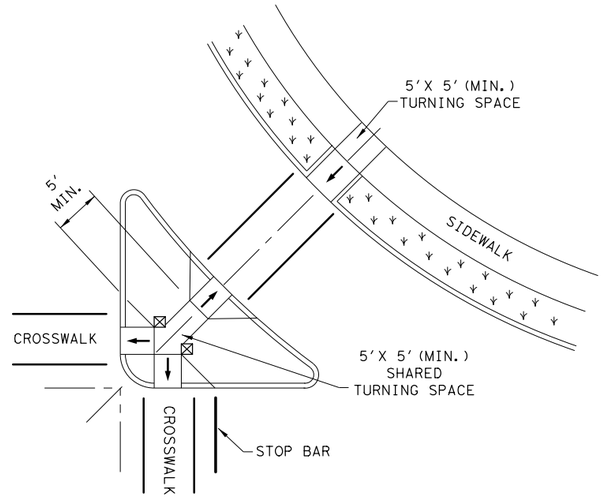

AT INTERSECTION
W/FREE RIGHT TURN & ISLAND

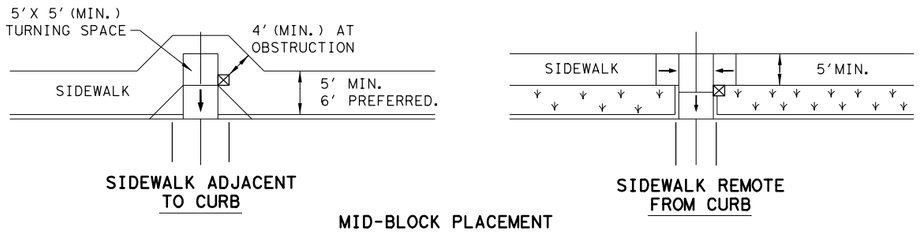

MID-BLOCK PLACEMENT
PERPENDICULAR RAMPS

LEGEND:

SHOWS DOWNWARD SLOPE. →

DENOTES PREFERRED LOCATION OF PEDESTRIAN PUSH BUTTON (IF APPLICABLE). ☒

DENOTES PLANTING OR NON-WALKING SURFACE NOT PART OF PEDESTRIAN CIRCULATION PATH.

SHEET 4 OF 4

Texas Department of Transportation — Design Division Standard

PEDESTRIAN FACILITIES CURB RAMPS

PED-18

FILE: ped18	DN: TxDOT	DW: VP	CK: KM	CK: PK & JG
© TxDOT: MARCH, 2002	CONT	SECT	JOB	HIGHWAY
REVISIONS	0912	73	215	FM 270, ETC
REVISED 08, 2005 REVISED 06, 2012 REVISED 01, 2018	DIST	COUNTY		SHEET NO.
	HOU	GALVESTON		169

DISCLAIMER:
The use of this standard is governed by the "Texas Engineering Practice Act". No warranty of any kind is made by TxDOT for any purpose whatsoever. TxDOT assumes no responsibility for the conversion of this standard to other formats or for incorrect results or damages resulting from its use.

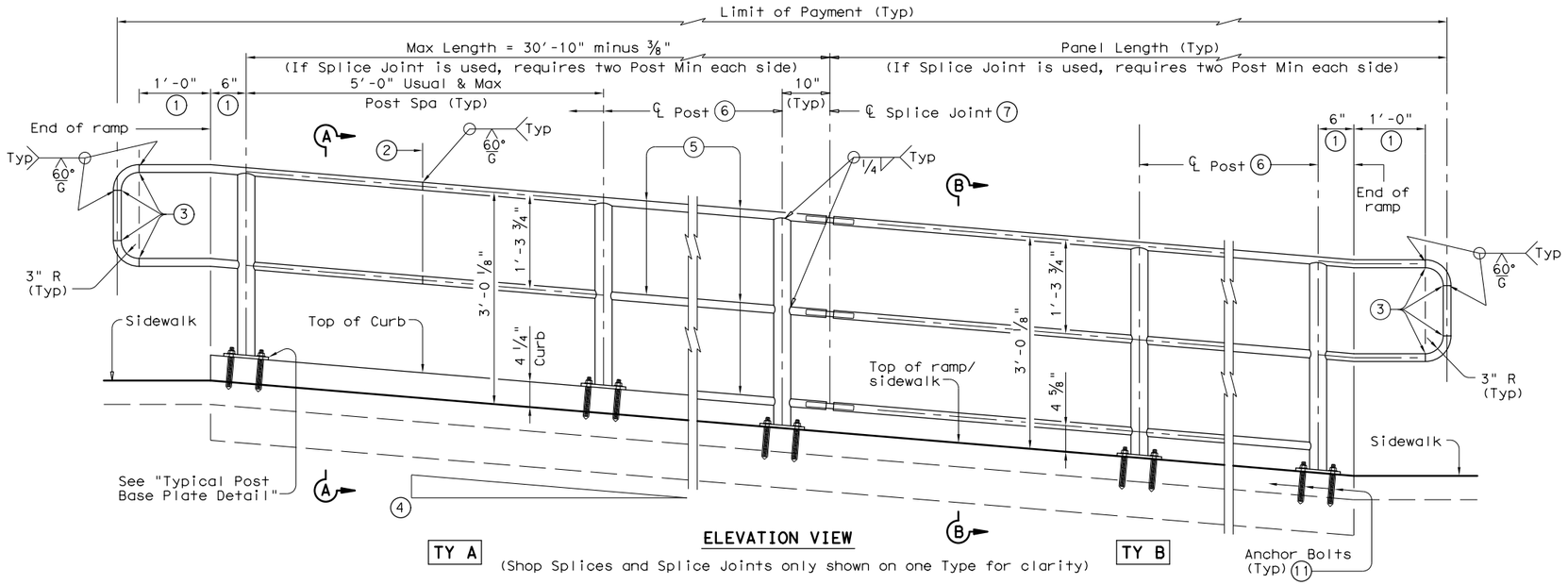

TY A

ELEVATION VIEW

(Shop Splices and Splice Joints only shown on one Type for clarity)

TY B

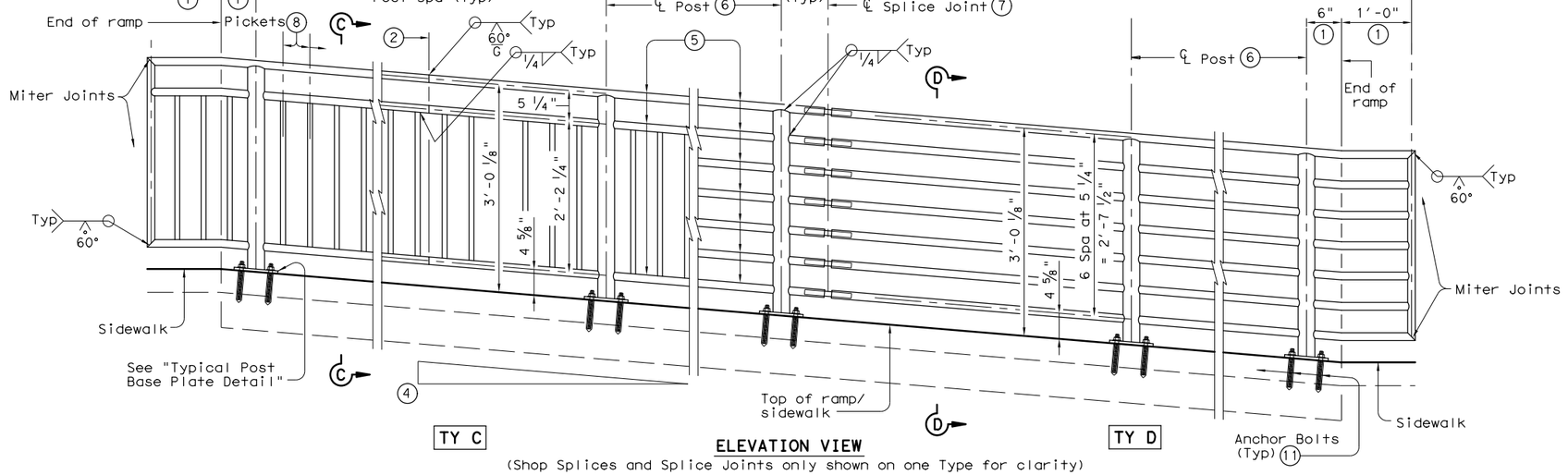

TY C

ELEVATION VIEW

(Shop Splices and Splice Joints only shown on one Type for clarity)

TY D

RECOMMENDED USAGE (9)(10)	
Dropoff Height/ Condition	Recommended Rail Options
<30" dropoff	TY A, TY B, TY C, or TY D
≥ 30" dropoff, or along Bike Path	TY E or TY F

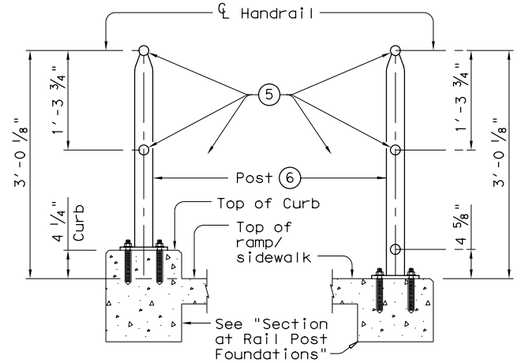

SECTION A-A

(Showing Handrail **TY A**)

SECTION B-B

(Showing Handrail **TY B**)

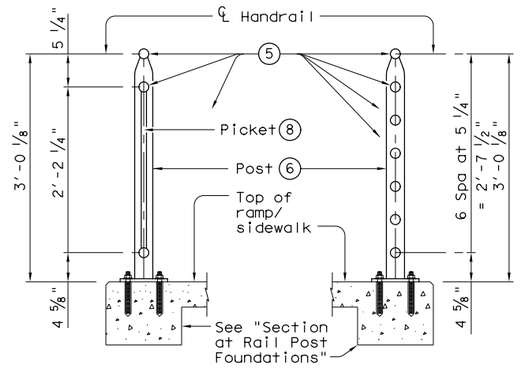

SECTION C-C

(Showing Handrail **TY C**)

SECTION D-D

(Showing Handrail **TY D**)

1. Parallel to ground.
2. One shop splice per panel is permitted with minimum 85 percent penetration. The weld may be square groove or single vee groove. Grind smooth.
3. Shop splice is permitted with minimum 85 percent penetration. The weld may be square groove or single vee groove. Grind smooth.
4. See Ramp Details located elsewhere in plans for ramp slope and dimensions. Maximum ramp slope will not exceed 8.3 percent. Level landing required for each 30" rise if grade exceeds 5 percent.
5. 1 ½" Dia. Standard Pipe (1.900" O.D., 0.145" wall thickness). Parallel to ramp / sidewalk. Provide holes as needed in 1 ½" Dia. pipe for galvanizing drainage and venting.
6. 2 ½" Dia. Standard Pipe (2.875" O.D., 0.203" wall thickness). See "Post Mount Detail" for crimping and trimming post to fit Dia. of top rail. Provide holes as needed in post for galvanizing drainage and venting. Plumb all posts.
7. See "Handrail Fabrication Details" for Splice Joints.
8. ℄ ⅝" Dia. Round Bar equal spacing at 4 ½" Max. Plumb all pickets.
9. When needed for accessibility (grade > 5 percent) or as needed for pedestrian safety.
10. Not to be used on bridges.
11. See "General Notes" for anchor bolt information.

DATE: 8/1/2023
FILE: $FILE$

SHEET 1 OF 3

Texas Department of Transportation

Design Division Standard

PEDESTRIAN HANDRAIL DETAILS

PRD-13

FILE: prd13.dgn	DN: TxDOT	CK: AM	DW: JTR	CK: CGL
©TxDOT Decmeber 2006	CONT	SECT	JOB	HIGHWAY
REVISIONS REVISED MAY, 2013 (VP)	0912	73	215	FM 270, ETC
	DIST	COUNTY		SHEET NO.
	HOU	GALVESTON		170

DISCLAIMER:
The use of this standard is governed by the "Texas Engineering Practice Act". No warranty of any kind is made by TxDOT for any purpose whatsoever. TxDOT assumes no responsibility for the conversion of this standard to other formats or for incorrect results or damages resulting from its use.

DATE: 8/1/2023
FILE: $FILE$

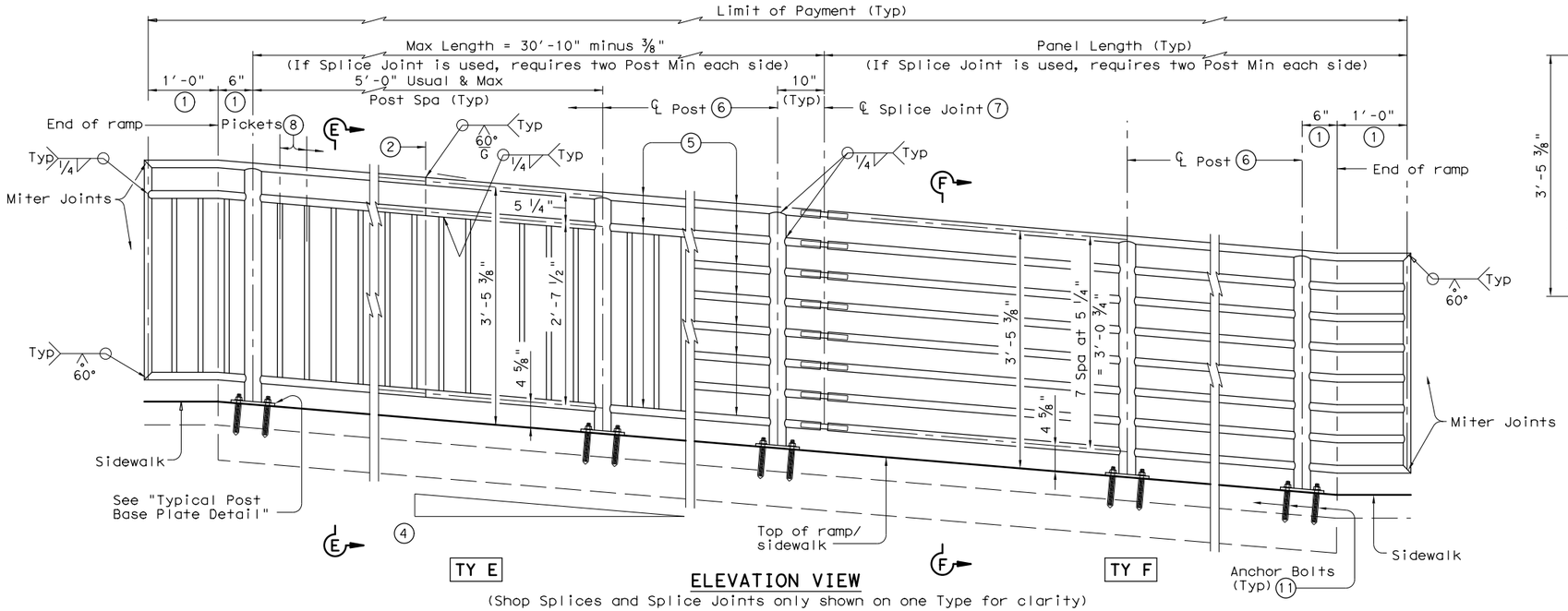

ELEVATION VIEW

(Shop Splices and Splice Joints only shown on one Type for clarity)

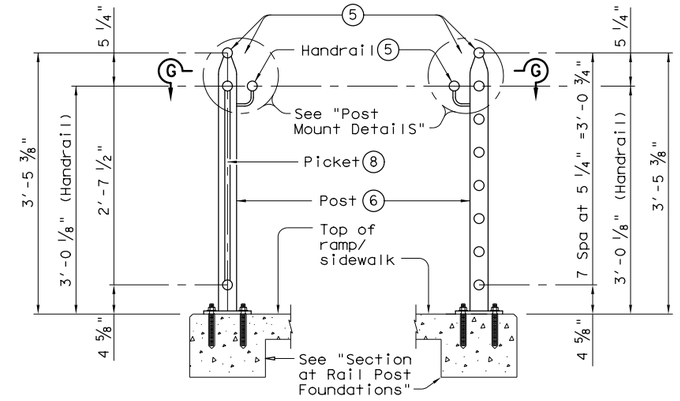

SECTION E-E
(Showing Handrail **TY E**)

SECTION F-F
(Showing Handrail **TY F**)

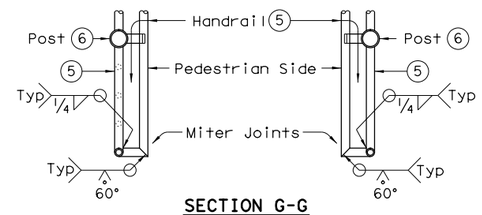

SECTION G-G
(Showing Handrail Termination)

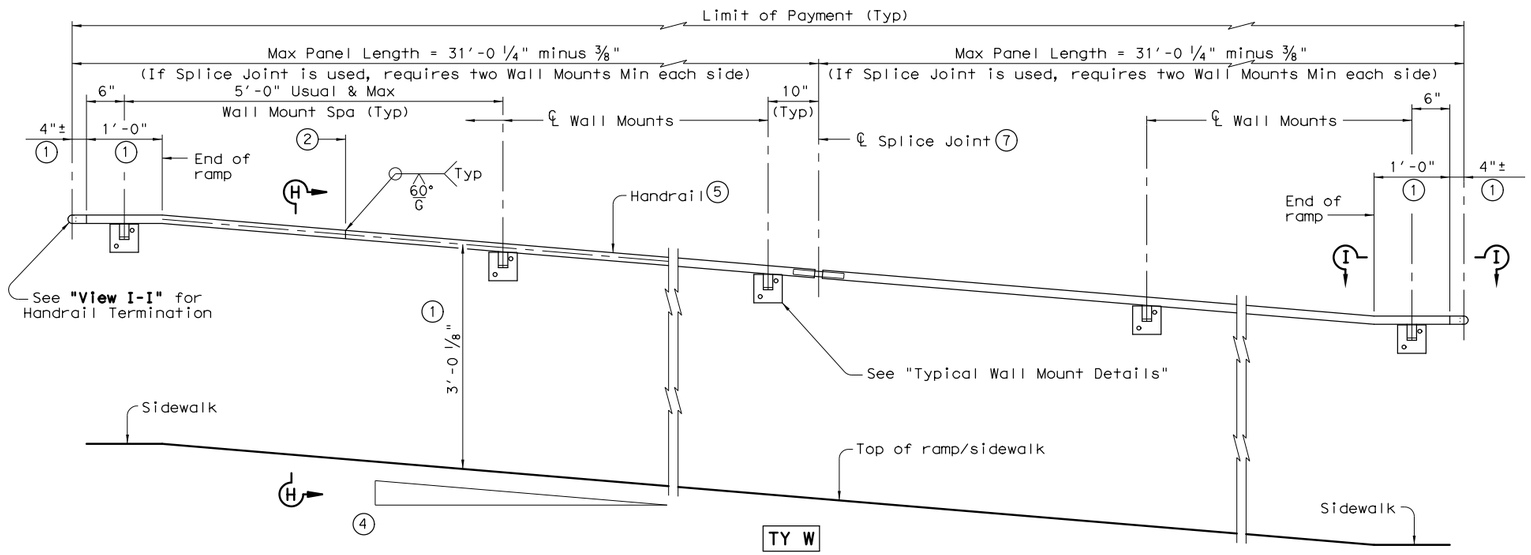

ELEVATION VIEW

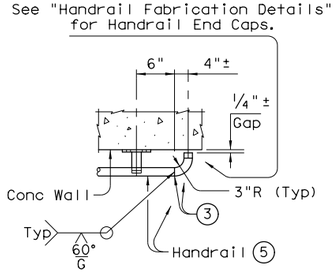

VIEW I-I
(Showing Handrail Termination)

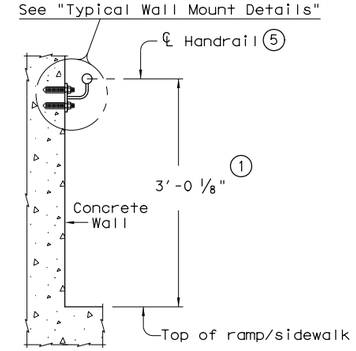

SECTION H-H
(Showing Handrail **TY W**)

1. Parallel to ground.
2. One shop splice per panel is permitted with minimum 85 percent penetration. The weld may be square groove or single vee groove. Grind smooth.
3. Shop splice is permitted with minimum 85 percent penetration. The weld may be square groove or single vee groove. Grind smooth.
4. See Ramp Details located elsewhere in plans for ramp slope and dimensions. Maximum ramp slope will not exceed 8.3 percent. Level landing required for each 30" rise if grade exceeds 5 percent.
5. 1 ½" Dia. Standard Pipe (1.900" O.D., 0.145" wall thickness). Parallel to ramp / sidewalk. Provide holes as needed in 1 ½" Dia. pipe for galvanizing drainage and venting.
6. 2 ½" Dia. Standard Pipe (2.875" O.D., 0.203" wall thickness). See "Post Mount Detail" for crimping and trimming post to fit Dia. of top rail. Provide holes as needed in post for galvanizing drainage and venting. Plumb all posts.
7. See "Handrail Fabrication Details" for Splice Joints.
8. ℄ ⅝" Dia. Round Bar equal spacing at 4 ½" Max. Plumb all pickets.
11. See "General Notes" for anchor bolt information.

Texas Department of Transportation | Design Division Standard

PEDESTRIAN HANDRAIL DETAILS

PRD-13

FILE: prd13.dgn	DN: TxDOT	CK: AM	DW: JTR	CK: CGL
©TxDOT December 2006	CONT	SECT	JOB	HIGHWAY
REVISIONS REVISED MAY, 2013 (VP)	0912	73	215	FM 270, ETC
	DIST	COUNTY		SHEET NO.
	HOU	GALVESTON		171

DISCLAIMER:
The use of this standard is governed by the "Texas Engineering Practice Act". No warranty of any kind is made by TxDOT for any purpose whatsoever. TxDOT assumes no responsibility for the conversion of this standard to other formats or for incorrect results or damages resulting from its use.

DATE: 8/1/2023
FILE: $FILE$

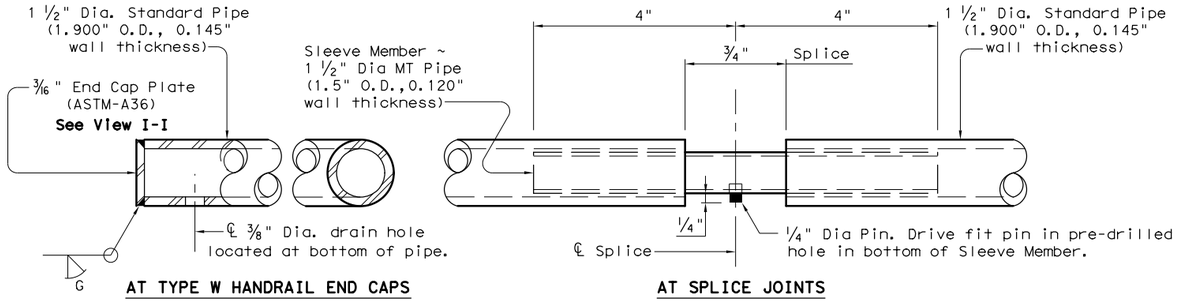

AT TYPE W HANDRAIL END CAPS

AT SPLICE JOINTS

HANDRAIL FABRICATION DETAILS

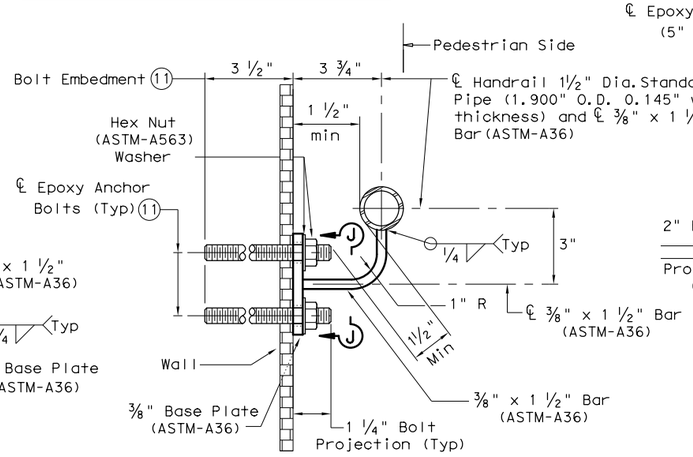

SECTION J-J
(Anchor Bolts not shown for clarity)

SECTION AT WALL MOUNT

TYPICAL WALL MOUNT DETAILS

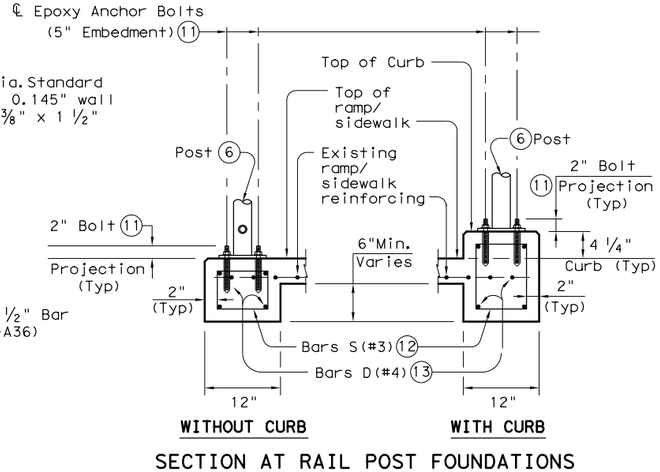

WITHOUT CURB

WITH CURB

SECTION AT RAIL POST FOUNDATIONS

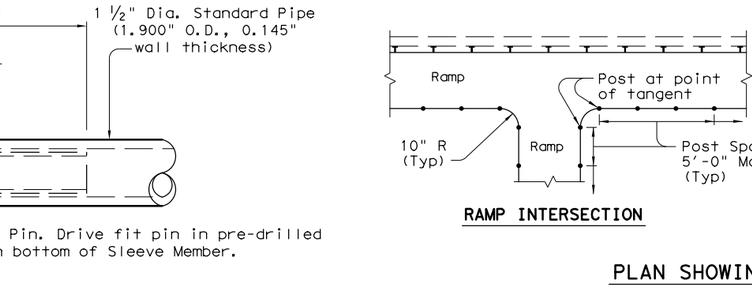

RAMP INTERSECTION

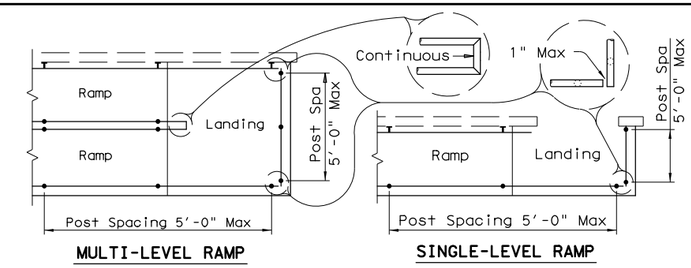

MULTI-LEVEL RAMP

SINGLE-LEVEL RAMP

PLAN SHOWING RAIL AT RAMP CONDITIONS

GENERAL NOTES

Designed according to ADAAG, Texas Accessibility Standards, Uniform Building Code, and AASHTO LRFD Specifications.

Handrail anchorage details shown on this standard may require modification for select structure types. See appropriate details elsewhere in plans for these modifications.

Pipe will conform to ASTM-A53 Grade B or A500 Grade B. Steel plates and steel bars will conform to ASTM-A36. Mechanical tubing (MT) will conform to ASTM A513 Grade 1015 or higher. Galvanize all steel components except reinforcing steel unless noted otherwise.

Concrete for foundations will be in accordance with Item 531 "Sidewalks". All reinforcing steel must be Grade 60. Bar laps, where required, will be as follows: Uncoated ~ #4 = 1'-5" Epoxy coated ~ #4 = 2'-1"

When the plans require painted steel, follow the requirements for painting galvanized steel in Item 446, "Cleaning and Painting Steel". Sleeve Members will receive galvanization and only get field painted after installation unless directed otherwise by Engineer.

Epoxy Anchor bolts for wall mount and post base plate will be ⅝" Dia. ASTM A36 threaded rods with one hex nut and one hardened steel washer at each bolt. ⅝" Dia. threaded rod embedment depth for wall mounts is 3 ½" and embedment depth for post base plate is 5".

Embed threaded rods into concrete with a Type III (Class C) epoxy meeting the requirements of DMS-6100, "Epoxies and Adhesives". Mix and dispense adhesive with the manufacturer's static mixing nozzle/dual cartridge system. Core drill holes (percussion drilling not permitted).

At the contractor's option the post base plate anchor bolts may be cast with the Ramp/Sidewalk (See Cast-in-Place Anchor Bolt Options).

Optional cast-in-place anchor bolts will be ⅝" Dia ASTM A307 Grade A bolts (or A36 threaded rods with one tack welded hex nut each) with one hex nut and one hardened steel washer at each bolt. Embedment depth of cast-in-place bolt will be 8" for post base plate.

Handrails and any wall or other surface adjacent to them will be free of any sharp or abrasive elements.

Submit shop drawings to the Engineer unless otherwise noted. For curved handrail applications, fabricate the handrail to the curve if radius is less than 600 ft. Shop drawings are required when rail is fabricated to the curve.

For all handrails, erection drawings will be submitted to the Engineer for approval to ensure proper installation.

Drawings will show handrail mount locations with bolts setting, spacing, ramp slope, and/or splice joint locations, and handrail lengths with identification showing where each handrail goes on the layout.

Payment for concrete sidewalks or curb ramps will be paid for in accordance with Item 531 "Sidewalks".

Payment for all items shown is to be included in unit price bid in accordance with Item 450 "Railing" of the type specified.

All exposed edges will be rounded or chamfered to approximately ⅛" by grinding.

(5) 1 ½" Dia. Standard Pipe (1.900" O.D., 0.145" wall thickness). Parallel to ramp/sidewalk. Provide holes as needed in 1 ½" Dia. pipe for galvanizing drainage and venting.

(6) 2 ½" Dia. Standard Pipe (2.875" O.D., 0.203" wall thickness). Plumb all posts. See "Post Mount Detail" for crimping and trimming post to fit the diamenter of top rail. Provide holes as needed in post for galvanizing drainage and venting.

(11) See "General Notes" for anchor bolt information.

(12) Bars S(#3) spaced at 12" Max (Spaced 3" from outside edge of overall length of Ramp/Sidewalk).

(13) Provide 1 ½" end cover to Bars D(#4) from outside edge of overall length of Ramp/Sidewalk.

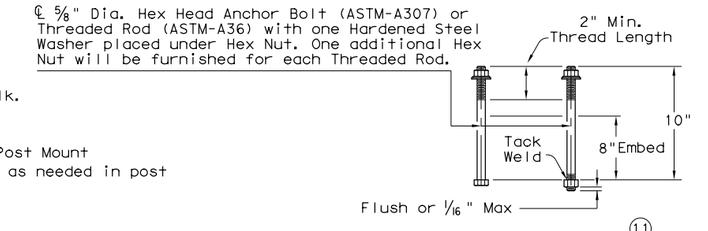

CAST-IN-PLACE ANCHOR BOLT OPTIONS
(Used for Post Base Plate only)

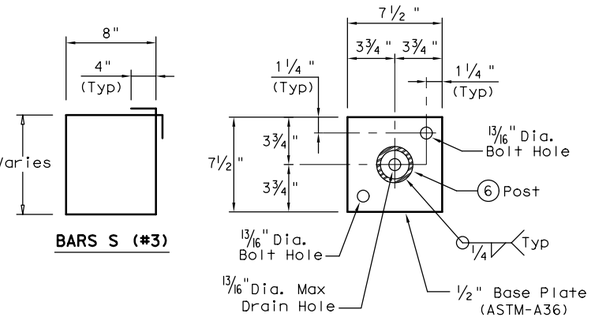

TYPICAL POST BASE PLATE DETAIL

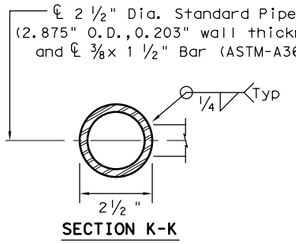

SECTION K-K

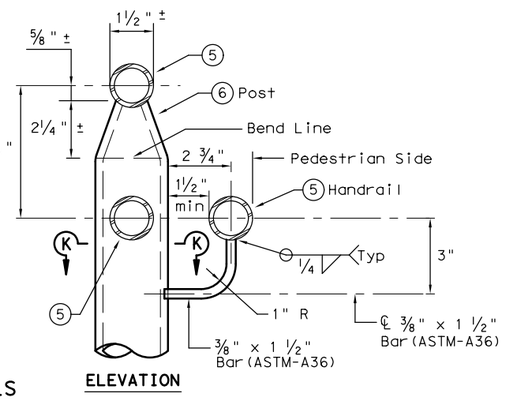

ELEVATION

POST MOUNT DETAILS

SHEET 3 OF 3

Texas Department of Transportation

Design Division Standard

PEDESTRIAN HANDRAIL DETAILS

PRD-13

FILE: prd13.dgn	DN: TxDOT	CK: AM	DW: JTR	CK: CGL
©TxDOT December 2006	CONT	SECT	JOB	HIGHWAY
REVISIONS	0912	73	215	FM 270, ETC
REVISED MAY, 2013 (VP)	DIST	COUNTY		SHEET NO.
	HOU	GALVESTON		172

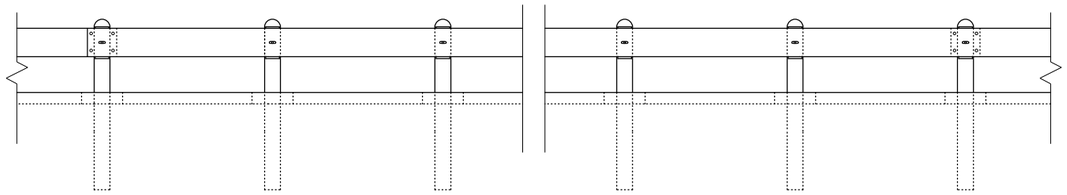

ELEVATION

TRAFFIC

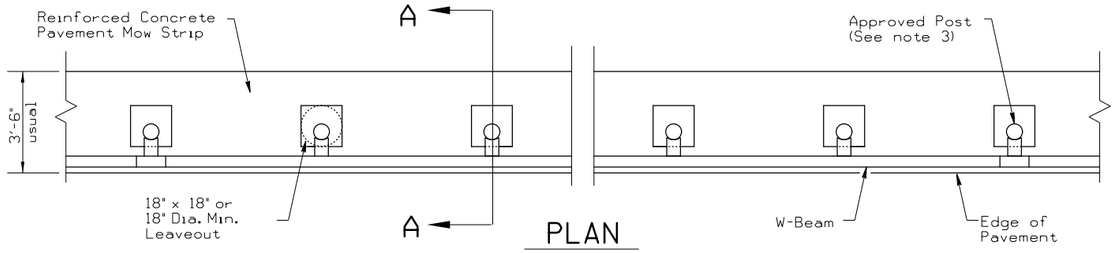

PLAN

GENERAL NOTES

1. Place concrete riprap mow strips at all Metal Beam Guard Fence locations, and in accordance with Item 432, "Riprap". Use Class B Concrete, reinforced with No. 3 bars spaced at 18 in. centers each direction and 2 in. below the surface.

2. Provide a minimum of 7 in. leave out behind the post. Do not place concrete in the leave out.

3. The type of approved post is shown elsewhere on the plans. See the applicable standard sheets for additional details and information.

4. Other curb placement options may be used. Curbs are not considered part of the mow strip and are paid for under other pertinent bid items.

5. Fill the leave outs with no more than a 2-sack grout mixture and place in accordance with Section 421.2.7, ""Mortar and Grout." Payment for furnishing and placing the grout mixture is subsidiary to the Item 432, "RIPRAP."

6. Place the mow strip the entire length of the guard fence plus any Terminal Anchor Section (TAS) or Single Guardrail Terminal (SGT) to 2 ft. beyond the face of the object marker at the end of the SGT. Do not allow concrete to adhere to the ground line strut shown on the SGT standard sheet.

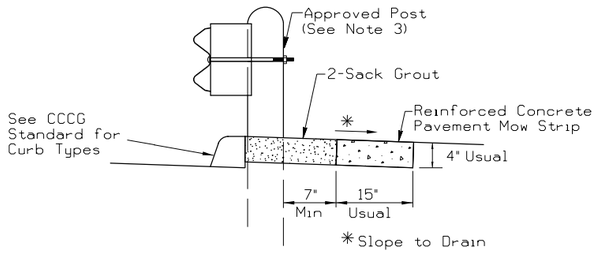

CURB OPTION (1)

Shown at Curbed Location

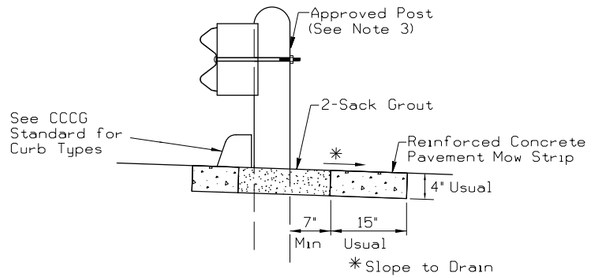

CURB OPTION (2)

Curb Shown on Top of Mow Strip

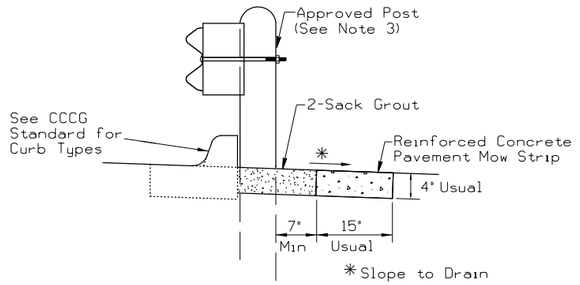

CURB OPTION (3)

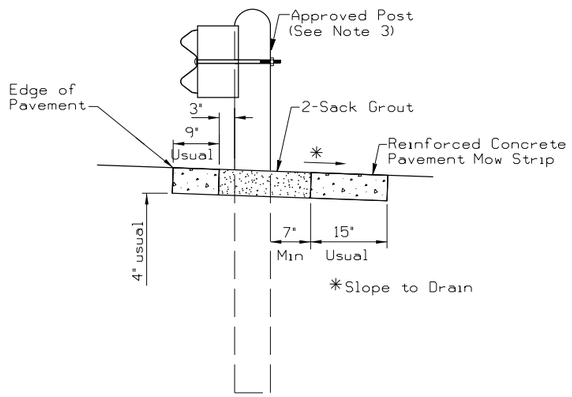

SECTION A-A

Typical

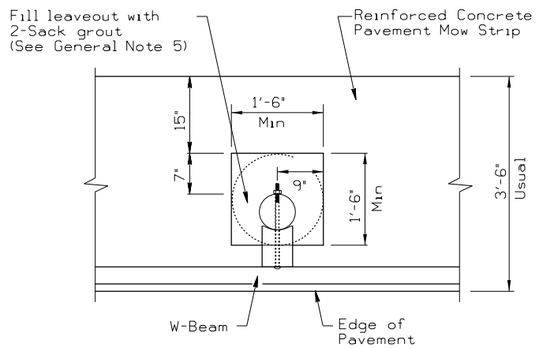

MOW STRIP DETAIL

Reinforced Concrete Pavement
Mow Strip with 18" x 18" or 18"
dia. minimum leaveout.

Texas Department of Transportation
Houston District

MOW STRIP

MS

FILE:	DN:	CK:	DW:	CK:	
© TxDOT 2014	DIST	FED REG	PROJECT NO.		SHEET
REVISIONS	HOU	6			173
03/15 2014 SPECS	COUNTY		CONTROL	SECT	JOB	HIGHWAY
	GALVESTON		0912	73	215	FM 270, ETC.

STDE5.DGN

DISCLAIMER:
THE USE OF THIS STANDARD IS GOVERNED BY THE "TEXAS ENGINEERING PRACTICE ACT". NO WARRANTY OF ANY KIND IS MADE BY TXDOT FOR ANY PURPOSE WHATSOEVER. TXDOT ASSUMES NO RESPONSIBILITY FOR THE CONVERSION OF THIS STANDARD TO OTHER FORMATS OR FOR INCORRECT RESULTS OR DAMAGES RESULTING FROM ITS USE.

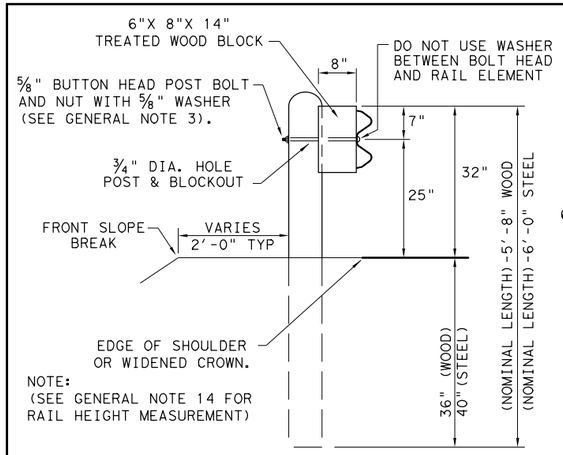

TYPICAL POST PLACEMENT

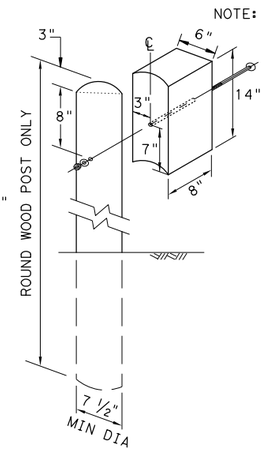

WOOD BLOCK TO ROUND WOOD POST

NOTE: TOENAIL WITH ONE 16D GALV. NAIL TO PREVENT BLOCK ROTATION.

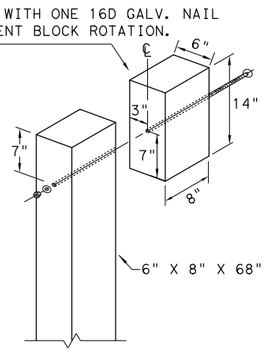

WOOD BLOCK TO RECTANGULAR WOOD POST

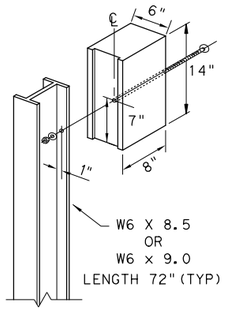

ROUTED WOOD BLOCK TO I-BEAM STEEL POST

NOTE: ✳✳ "WOOD" INDICATES DIMENSIONS FOR BOTH ROUND AND RECTANGULAR WOOD POST SYSTEMS.

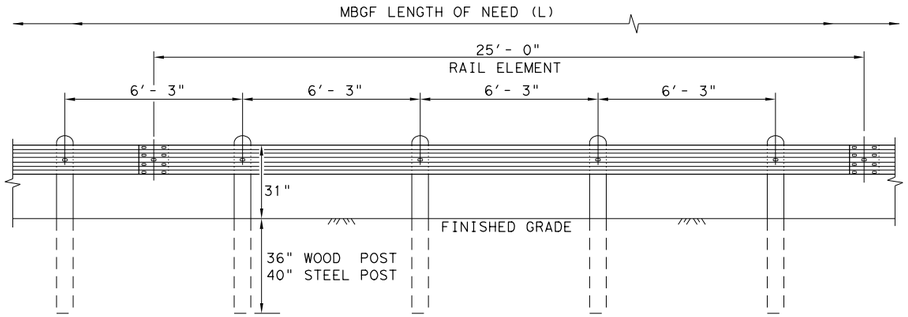

ELEVATION
MID-SPAN RAIL SPLICE

SHOWING A 25'- 0" SECTION OF W-BEAM RAIL. (SEE GENERAL NOTE 2)

DIRECTION OF TRAFFIC

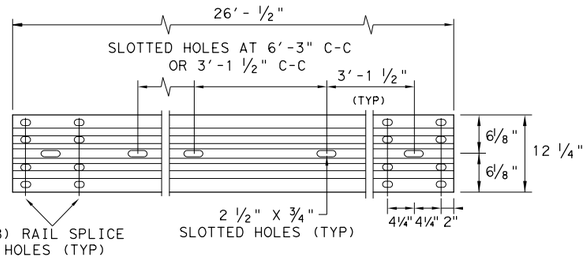

ELEVATION 25'- 0"(NOM.) W-BEAM SECTION

NOTES: SEE GENERAL NOTE 2 FOR ALLOWABLE RAIL TYPES.
SEE RAIL SPLICE DETAIL FOR REQUIRED HARDWARE.

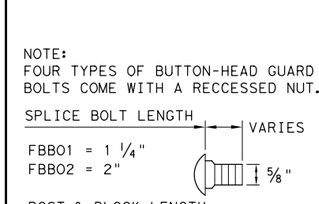

BUTTON HEAD BOLT

NOTE: SEE GENERAL NOTE 3 FOR SPLICE & POST BOLT DETAILS.

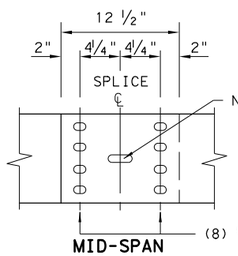

MID-SPAN RAIL SPLICE DETAIL

NOTE: GF(31), MID-SPAN RAIL SPLICES ARE REQUIRED WITH 6'-3" POST SPACINGS.

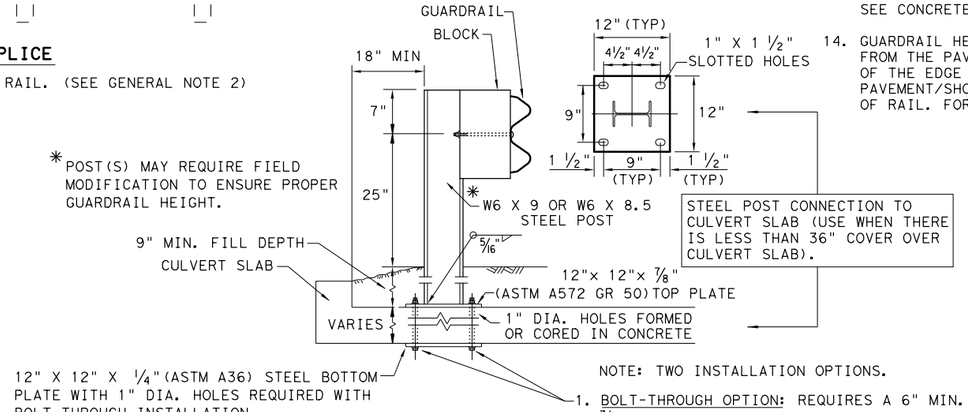

LOW FILL CULVERT POST

NOTE: TWO INSTALLATION OPTIONS.

1. BOLT-THROUGH OPTION: REQUIRES A 6" MIN. SLAB THICKNESS. ⅞" DIA (ASTM A449) HEAVY HEX BOLTS WITH TWO HARDENED WASHER EACH AND HEAVY HEX NUTS.
   NOTE: BOLT LENGTH = SLAB PLUS 2 ¼" MIN.

2. EPOXY ANCHOR OPTION: THIS OPTION MAY ONLY BE USED IF THE CULVERT SLAB IS 9" MIN. THICK. THREADED ANCHOR RODS MUST BE ⅞" DIA. ASTM A449 OR A193 GRADE B7 WITH HEAVY HEX NUT, AND ONE HARDENED WASHER EACH. EMBED ANCHOR RODS 6" WITH HILTI HIT RE 500 EPOXY ADHESIVE. OTHER TYPE III CLASS C EPOXY ADHESIVES MEETING THE REQUIREMENTS OF DMS-6100, "EPOXIES AND ADHESIVES", MAY BE USED IF IT CAN BE DEMONSTRATED THAT THEY MEET OR EXCEED THE STRENGTH OF HILTI HIT RE 500 WITH THE SAME EMBEDMENT DEPTH AND THREADED ROD DIA. FOLLOW THE MANUFACTURER'S REQUIREMENTS FOR INSTALLING EPOXIED THREADED RODS. EXTEND RODS ¼" MIN. BEYOND NUT.

NOTE: CULVERTS OF 25 FT. OR LESS, SEE GF(31)LS STANDARD FOR "LONG SPAN" OPTION.

GENERAL NOTES

1. THE TYPE OF POST (ROUND WOOD POST, RECTANGULAR WOOD POST, OR STEEL POST) WILL BE AS SHOWN IN THE PLANS. THE EXACT POSITION OF MBGF SHALL BE SHOWN IN THE PLANS OR AS DIRECTED BY THE ENGINEER. STEEL POSTS TO BE GALVANIZED IN ACCORDANCE WITH ITEM 445, "GALVANIZING."
2. RAIL ELEMENTS SHALL MEET THE REQUIREMENTS OF ITEM 540,"METAL BEAM GUARD FENCE" EXCEPT AS MODIFIED IN THE PLANS. THE CONTRACTOR MAY FURNISH RAIL ELEMENTS OF 25'- 0", OR 12'- 6" (NOM.) LENGTHS. RAIL ELEMENTS MAY HAVE SLOTTED HOLES AT 3'-1 ½" C-C OR 6'-3" C-C. A SPECIAL LENGTH OF RAIL MAY BE MANUFACTURED TO ACCOMMODATE THE DOWNSTREAM ANCHOR TERMINAL (DAT) AND THE TRANSITION SECTIONS OF GUARDRAIL.
3. BUTTON HEAD "POST BOLTS & NUTS" SHALL MEET THE REQUIREMENTS OF (ASTM A307), AND SHALL BE OF SUFFICIENT LENGTH TO EXTEND THROUGH THE FULL THICKNESS OF THE NUT AND ⅝" WASHER (FWC16a) AND NOT MORE THAN 1" BEYOND IT. TRIM REMAINING BOLT LENGTH TO MEET REQUIRED LENGTH.
4. FITTINGS (BOLTS, NUTS, AND WASHERS) SHALL BE GALVANIZED IN ACCORDANCE WITH ITEM 445,"GALVANIZING." FITTINGS SHALL BE SUBSIDIARY TO THE BID ITEM.
5. CROWN SHALL BE WIDENED TO ACCOMMODATE THE METAL BEAM GUARD FENCE.
6. THE LATERAL APPROACH TO THE GUARD FENCE, SHALL HAVE A MAXIMUM SLOPE OF 1V:10H.
7. IF SHOWN ELSEWHERE IN THE PLANS OR AS DIRECTED BY THE ENGINEER, THE GUARD FENCE MAY BE FLARED AT A RATE OF 25:1 OR FLATTER.
8. UNLESS OTHERWISE SHOWN IN THE PLANS, GUARD FENCE PLACED IN THE VICINITY OF CURBS SHALL BE POSITIONED SO THAT THE FACE OF CURB IS LOCATED DIRECTLY BELOW OR BEHIND THE FACE OF THE RAIL. RAIL PLACED OVER CURBS SHALL BE INSTALLED SO THAT THE POST BOLT IS LOCATED APPROXIMATELY 25 INCHES ABOVE THE GUTTER PAN OR EDGE OF SHOULDER.
9. APPLICATIONS IN SOLID ROCK ARE ONLY ALLOWED WITH STEEL POSTS. IF SOLID ROCK IS ENCOUNTERED WITHIN 0 TO 18" OF THE FINISHED GRADE, DRILL A 24" DIA. HOLE, 24" INTO THE ROCK. IF SOLID ROCK IS ENCOUNTERED BELOW 18", DRILL A 12" DIA. HOLE, 12" INTO THE ROCK OR TO THE STANDARD EMBEDMENT DEPTH, WHICHEVER MAYBE LESS. ANY EXCESS POST LENGTH, AFTER MEETING THESE DEPTHS, MAY BE FIELD CUT TO ENSURE PROPER GUARDRAIL MOUNTING HEIGHT. BACKFILL WITH COARSE AGGREGATE MATERIAL.
10. POSTS SHALL NOT BE SET IN CONCRETE, OF ANY DEPTH.
11. SPECIAL FABRICATION WILL BE REQUIRED AT INSTALLATION LOCATIONS HAVING A CURVATURE OF LESS THAN 150 FT. RADIUS.
12. UNLESS OTHERWISE SHOWN IN THE PLANS, A COMPOSITE MATERIAL BLOCK THAT MEETS THE REQUIREMENTS OF DMS-7210,"COMPOSITE MATERIAL POSTS AND BLOCKS FOR METAL BEAM GUARD FENCE" MAY BE SUBSTITUTED FOR BLOCKS OF SIMILAR DIMENSIONS. THE CONSTRUCTION DIVISION, TXDOT MAINTAINS A MATERIAL PRODUCER LIST (MPL) FOR PRODUCERS OF MATERIALS CONFORMING TO DMS-7210 ONLY PRODUCERS ON THE MPL MAY FURNISH COMPOSITE MATERIAL BLOCKS.
13. FOR THE LOW FILL CULVERT OPTION, POSTS LOCATED PARTIALLY OR WHOLLY BETWEEN PRECAST BOX CULVERT UNITS, THE USE OF A CAST-IN-PLACE CONCRETE CLOSURE BETWEEN BOXES IS REQUIRED. THE LENGTH OF THE CAST-IN-PLACE CONCRETE CLOSURE SHALL ACCOMMODATE THE PLACEMENT OF THE LOW FILL CULVERT OPTION. SEE CONCRETE CLOSURE DETAILS ON BRIDGE STANDARD SCP-MD.
14. GUARDRAIL HEIGHT MEASUREMENT: WHEN THE GUARDRAIL IS LOCATED ABOVE PAVEMENT, MEASURE THE HEIGHT FROM THE PAVEMENT TO THE TOP OF THE W-BEAM RAIL. WHEN THE GUARDRAIL IS LOCATED UP TO 2 FT. OFF OF THE EDGE OF PAVEMENT OR FOR A PAVEMENT OVERLAY, USE A 10-FOOT STRAIGHTEDGE TO EXTEND THE PAVEMENT/SHOULDER SLOPE TO THE BACK OF RAIL, MEASURE FROM THE BOTTOM OF STRAIGHTEDGE TO THE TOP OF RAIL. FOR GUARDRAIL LOCATED DOWN A 10:1 SLOPE, MEASURE FROM THE NOMINAL TERRAIN.

NOTE: TRANSISTIONS TO BRIDGE RAILS OR TRAFFIC BARRIERS.
SEE GF(31)TL3 TR STANDARD FOR HIGH-SPEED TL-3 TRANSITIONS.
SEE GF(31)TL2 TR STANDARD FOR LOW-SPEED TL-2 TRANSITIONS.

Texas Department of Transportation — Design Division Standard

METAL BEAM GUARD FENCE
TL-3 MASH COMPLIANT
GF(31)-19

FILE: gf3119.dgn	DN: TxDOT	CK: KM	DW: VP	CK: CGL/AG	
©TxDOT: NOVEMBER 2019	CONT	SECT	JOB	HIGHWAY	
REVISIONS	0912	73	215	FM 270, ETC	
	DIST	COUNTY		SHEET NO.	
	HOU	GALVESTON		174	

DATE: 8/1/2023
FILE: $FILE$

DISCLAIMER:
THE USE OF THIS STANDARD IS GOVERNED BY THE "TEXAS ENGINEERING PRACTICE ACT". NO WARRANTY OF ANY KIND IS MADE BY TXDOT FOR ANY PURPOSE WHATSOEVER. TXDOT ASSUMES NO RESPONSIBILITY FOR THE CONVERSION OF THIS STANDARD TO OTHER FORMATS OR FOR INCORRECT RESULTS OR DAMAGES RESULTING FROM ITS USE.

DATE: 8/1/2023
FILE: $FILE$

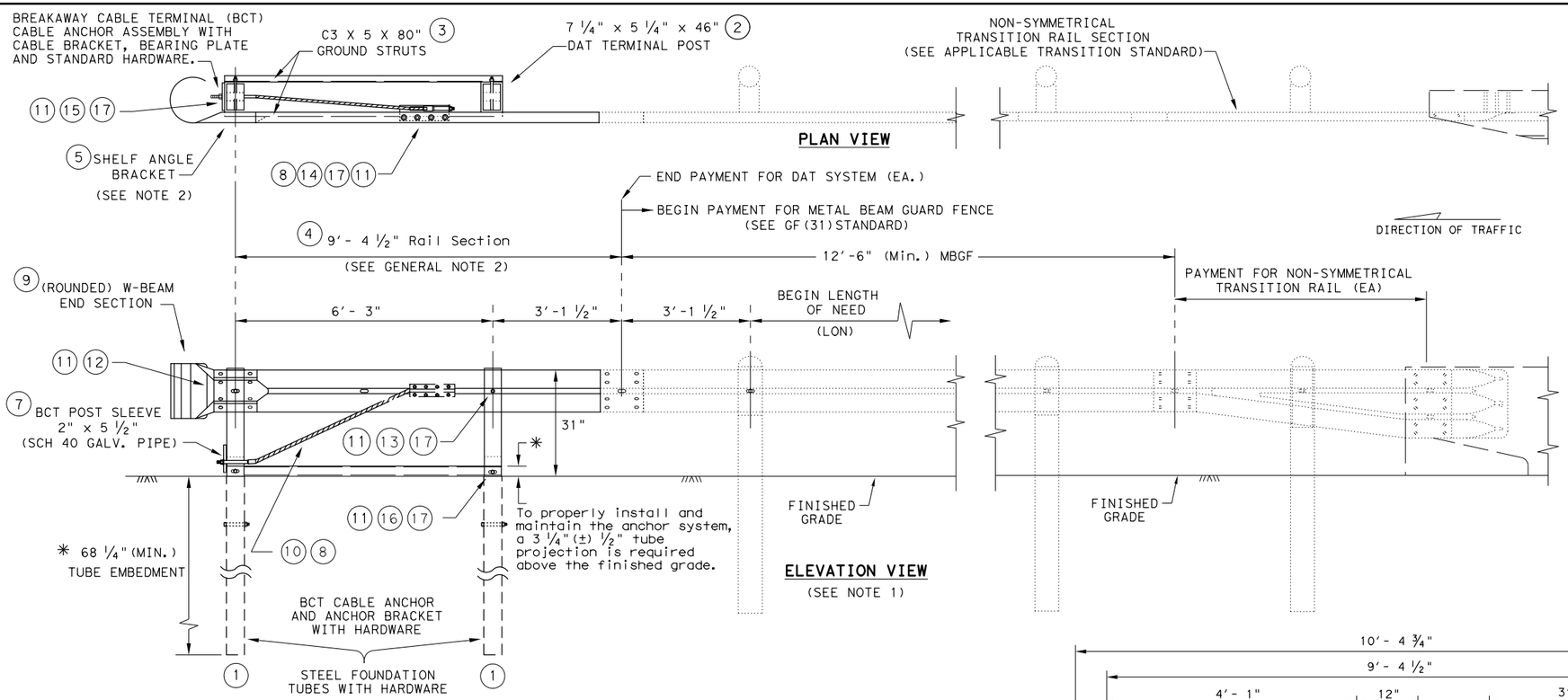

DOWNSTREAM ANCHOR TERMINAL (DAT)

NOTE: ONLY FOR DOWNSTREAM USE, WHEN LOCATED OUTSIDE THE HORIZONTAL CLEARANCE AREA OF OPPOSING TRAFFIC.

GENERAL NOTES

1. THE DETAIL SHOWN IS THE MINIMUM LENGTH OF NEED (LON) FOR A DOWNSTREAM ANCHOR TERMINAL (DAT) CONNECTED TO A CONCRETE RAIL.
2. THE RAIL SECTION AT THE END POST IS SUPPORTED BY THE SHELF ANGLE BRACKET. THE RAIL ELEMENT IS NOT ATTACHED TO THE END POST.
3. THE FOUNDATION TUBES SHALL NOT PROJECT MORE THAN 3 3/4" ABOVE THE FINISHED GRADE.
4. ALL HARDWARE FOR DAT SHALL BE ASTM A307 UNLESS OTHERWISE SHOWN.
5. REFER TO GF(31) SHEET FOR TERMINAL CONNECTION DETAILS.

MOW STRIP INSTALLATION

IF A MOW STRIP IS REQUIRED WITH THE DAT INSTALLATION THE LEAVE-OUT AREA AROUND THE STEEL FOUNDATION TUBES AND THE TWO CHANNEL STRUTS MAY BE OMITTED. THIS WILL REQUIRE A FULL POUR AT THE FOUNDATION TUBES.

#	(DAT) PARTS LIST	QTY
(1)	STEEL FOUNDATION TUBE	2
(2)	DAT TERMINAL POST	2
(3)	CHANNEL STRUT	2
(4)	TERMINAL RAIL ELEMENT	1
(5)	SHELF ANGLE BRACKET	1
(6)	BCT BEARING PLATE	1
(7)	BCT POST SLEEVE	1
(8)	GUARDRAIL ANCHOR BRACKET	1
(9)	(ROUNDED) W-BEAM END SECTION	1
(10)	BCT CABLE ANCHOR	1
(11)	RECESSED NUT, GUARDRAIL	20
(12)	1 1/4" BUTTON HEAD BOLT	4
(13)	10" BUTTON HEAD BOLT	2
(14)	5/8" X 2" HEX HEAD BOLT	8
(15)	5/8" X 8" HEX HEAD BOLT	4
(16)	5/8" X 10" HEX HEAD BOLT	2
(17)	5/8" FLAT WASHER	18

(4) **TERMINAL RAIL ELEMENT FOR DAT**

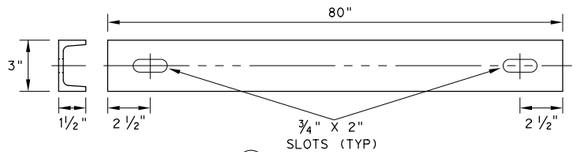

(3) **CHANNEL STRUT**
C3 X 5 X 80", GRADE A36

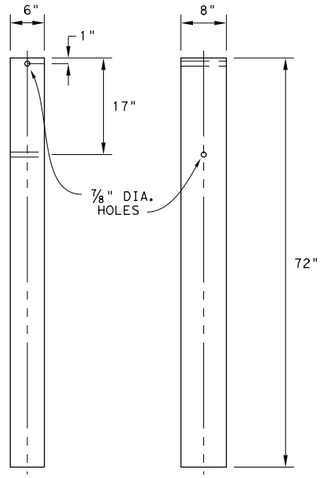

(1) **STEEL FOUNDATION TUBE**
6"x 8"x 1/8" x 72" STEEL TUBE

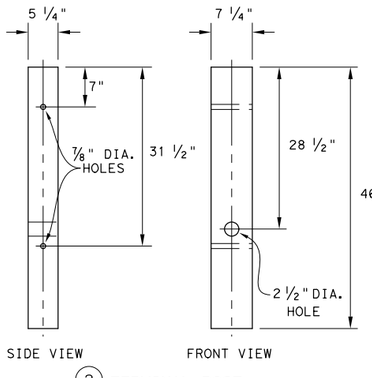

(2) **TERMINAL POST**
7 1/4"x 5 1/4"x 46" WOOD POST

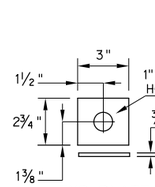

END PLATE

NOTE: DRIVE NAILS AND BEND OVER TO PREVENT PLATE ROTATION

(6) **BEARING PLATE**
8"x 8"x 5/8" R

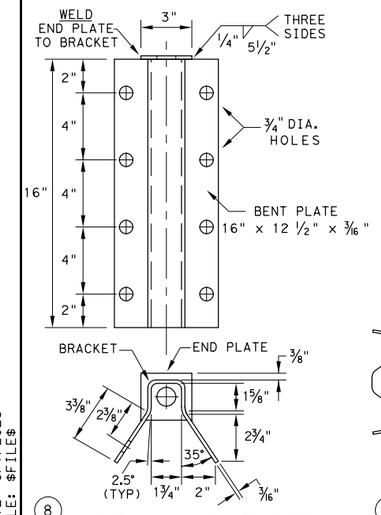

(8) **GUARDRAIL ANCHOR BRACKET**

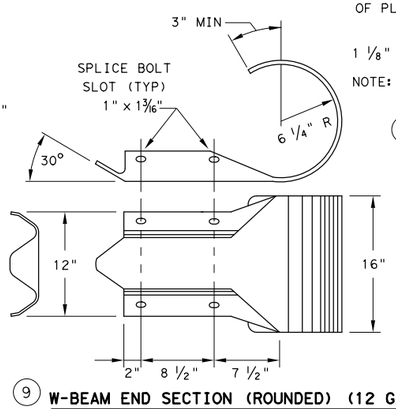

(9) **W-BEAM END SECTION (ROUNDED) (12 GA.)**

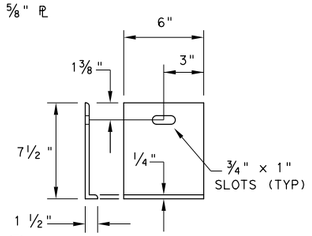

(5) **SHELF ANGLE BRACKET**

Texas Department of Transportation — Design Division Standard

METAL BEAM GUARD FENCE
(DOWNSTREAM ANCHOR TERMINAL)
TL-3 MASH COMPLIANT
GF(31)DAT-19

FILE: gf31dat19.dgn	DN: TxDOT	CK: KM	DW: VP	CK: CGL/AG	
©TxDOT: NOVEMBER 2019 REVISIONS	CONT	SECT	JOB	HIGHWAY	
	0912	73	215	FM 270, ETC	
	DIST	COUNTY		SHEET NO.	
	HOU	GALVESTON		175	

DISCLAIMER:
THE USE OF THIS STANDARD IS GOVERNED BY THE "TEXAS ENGINEERING PRACTICE ACT". NO WARRANTY OF ANY KIND IS MADE BY TXDOT FOR ANY PURPOSE WHATSOEVER. TXDOT ASSUMES NO RESPONSIBILITY FOR THE CONVERSION OF THIS STANDARD TO OTHER FORMATS OR FOR INCORRECT RESULTS OR DAMAGES RESULTING FROM ITS USE.

DATE: 8/1/2023
FILE: $FILE$

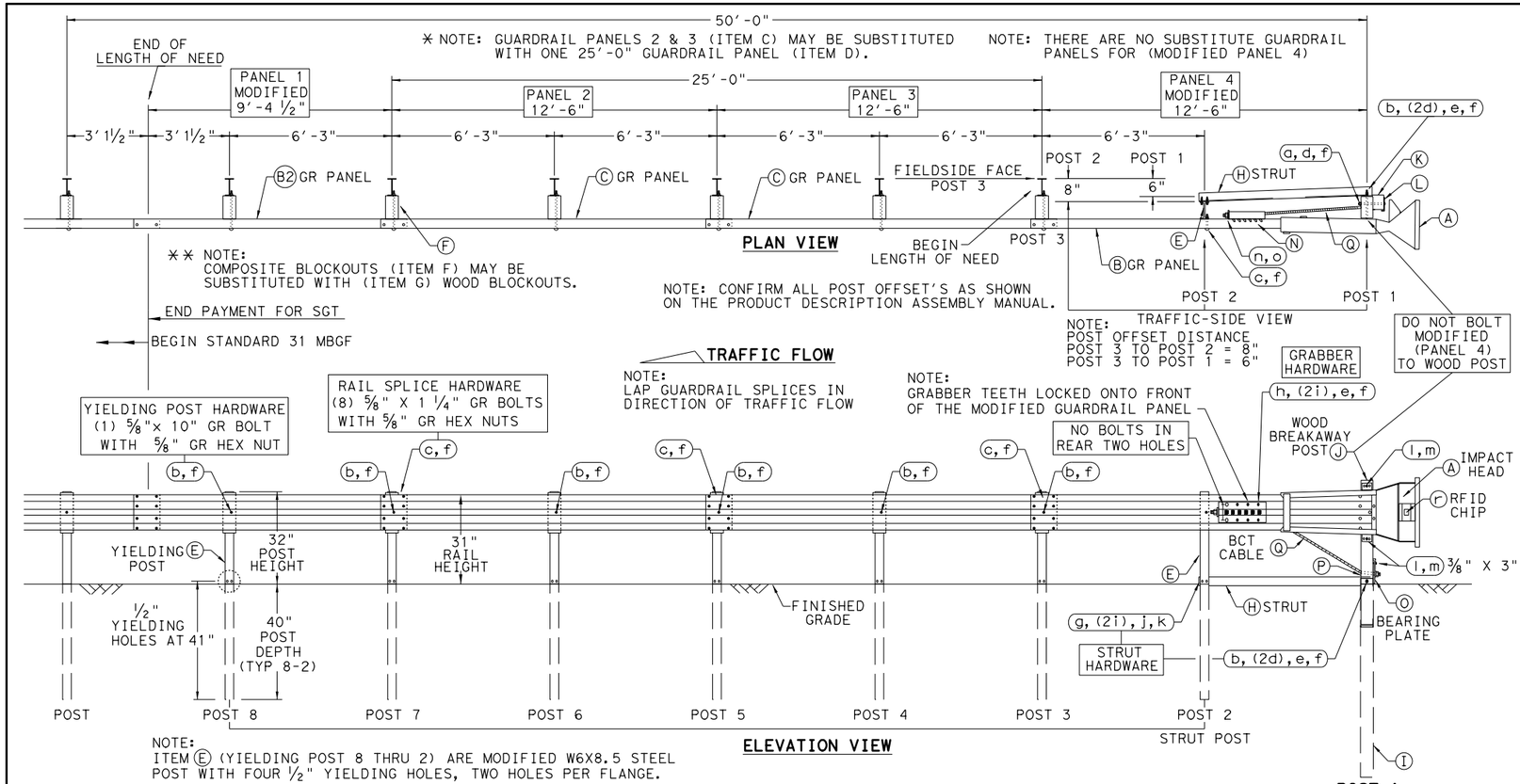

GENERAL NOTES

1. FOR SPECIFIC INFORMATION REGARDING INSTALLATION AND TECHNICAL GUIDANCE OF THE SYSTEM, CONTACT: SPIG INDUSTRY, INC. AT 1(267) 644-9510. 14675 INDUSTRIAL PARK RD; BRISTOL, VA 24202
2. FOR INSTALLATION, REPAIR AND MAINTENANCE REFER TO THE MANUFACTURER'S; SGET END TERMINAL, PRODUCT DESCRIPTION ASSEMBLY MANUAL.
3. MANUFACTURER WILL APPLY HIGH INTENSITY REFLECTIVE SHEETING, "OBJECT MARKER" TO THE FACE PLATE OF THE DEVICE PER MANUFACTURER'S RECOMMENDATIONS. THE OBJECT MARKER SHALL CONFORM TO THE STANDARDS REQUIRED IN TEXAS MUTCD.
4. THE NOMINAL HEIGHT OF THE GUARDRAIL BEAM IS 31 INCHES WITH A TOLERANCE OF +/- ONE INCH.
5. FOR POST (LEAVE-OUT) INSTALLATION AND GUIDANCE SEE TXDOT'S LATEST ROADWAY MOW STRIP STANDARD.
6. (POST 2 THROUGH POST 8) ARE MODIFIED STEEL-YIELDING POSTS WITH YIELDING HOLES AT GROUND LEVEL. THERE ARE NO SUBSTITUTE POSTS.
7. POSTS SHALL NOT BE SET IN CONCRETE.
8. IF SOLID ROCK IS ENCOUNTERED FOR ANY OF THE POSTS IN THE SYSTEM, CONTACT THE MANUFACTURER FOR SPECIFIC INSTALLATION GUIDANCE.
9. HARDWARE (BOLTS, NUTS, & WASHERS) SHALL BE GALVANIZED IN ACCORDANCE WITH ITEM 445,"GALVANIZING". FITTINGS SHALL BE SUBSIDIARY TO THE BID ITEM.
10. A COMPOSITE MATERIAL BLOCKOUT THAT MEETS DMS-7210 REQUIREMENTS MAY BE SUBSTITUTED FOR AN APPROVED WOOD BLOCKOUT. SEE CONSTRUCTION DIVISION MATERIAL PRODUCER LIST (MPL) FOR CERTIFIED PRODUCERS.
11. THE ENTIRE SYSTEM MUST BE INSTALLED IN A STRAIGHT LINE WITHOUT ANY CURVE. HOWEVER, THE SYSTEM CAN BE OFFSET BY TWO FEET AS SHOWN ON THE APPROACH GRADING DETAIL TO HELP OFF-SET THE IMPACT HEAD FROM SHOULDER OF THE ROAD.

ITEM	QTY	MAIN SYSTEM COMPONENTS	ITEM #
A	1	SGET IMPACT HEAD	SIH1A
B	1	MODIFIED GUARDRAIL PANEL 12'-6" 12GA	126SPZGP
B2	1	MODIFIED GUARDRAIL PANEL 9'-4 1/2" 12GA	GP94
C	2	STANDARD GUARDRAIL PANEL 12'-6" 12GA	GP126
D	1	STANDARD GUARDRAIL PANEL 25'-0" 12GA	GP25
E	7	MODIFIED YIELDING I-BEAM POST W6x8.5	YP6MOD
F	6	COMPOSITE BLOCKOUT 6" X 8" X 14"	CBO8
G	6	WOOD BLOCKOUT 6" X 8" X 14"	WBO8
H	1	STRUT 3" X 3" X 80" x 1/4" A36 ANGLE	STR80
I	1	FOUNDATION TUBE 6" X 8" X 72" x 3/16"	FNDT6
J	1	WOOD BREAKAWAY POST 5 1/2" x 7 1/2" x 50"	WBRK50
K	1	WOOD STRIKE BLOCK	WSBLK14
L	1	STRIKE PLATE 1/4" A36 BENT PLATE	SPLT8
M	1	REINFORCEMENT PLATE 12 GA. GR55	REPLT17
N	1	GUARDRAIL GRABBER 2 1/2" X 2 1/2" X 16 1/2"	GGR17
O	1	BEARING PLATE 8" X 8 5/8" X 5/8" A36	BPLT8
P	1	PIPE SLEEVE 4 1/4" X 2 3/8" O.D. (2 1/8" I.D.)	PSLV4
Q	1	BCT CABLE 3/4" X 81" LENGTH	CBL81
		SMALL HARDWARE	
a	1	5/8" X 12" GUARDRAIL BOLT 307A HDG	12GRBLT
b	7	5/8" X 10" GUARDRAIL BOLT 307A HDG	10GRBLT
c	33	5/8" X 1 1/4" GR SPLICE BOLTS 307A HDG	1GRBLT
d	3	5/8" FLAT WASHER F436 A325 HDG	58FW436
e	1	5/8" LOCK WASHER HDG	58LW
f	39	5/8" GUARDRAIL HEX NUT HDG	58HN563
g	2	1/2" X 2" STRUT BOLT A325 HDG	2BLT
h	6	1/2" X 1 1/4" PLATE BOLT A325 HDG	125BLT
i	16	1/2" FLAT WASHER F436 A325 HDG	12FWF436
j	8	1/2" LOCK WASHER HDG	12LW
k	8	1/2" HEX NUT A563 HDG	12HN563
l	4	3/8" X 3" HEX LAG SCREW GR5 HDG	38LS
m	4	3/8" FLAT WASHER F436 A325 HDG	38FW844
n	2	1" FLAT WASHER F436 A325 HDG	1FWF436
o	2	1" HEX NUT A563DH HDG	1HN563
p	1	18" TO 24" LONG ZIP TIE RATED 175-200LB	ZPT18
q	1	1 1/2" X 4" SCH-40 PVC PIPE	PSPCR4
r	1	RFID CHIP RATED MIL-STD-810F	RFID810F
s	1	IMPACT HEAD REFLECTIVE SHEETING	RS30M

* ALTERNATIVE ITEMS
** NOTE: SEE PLAN VIEW

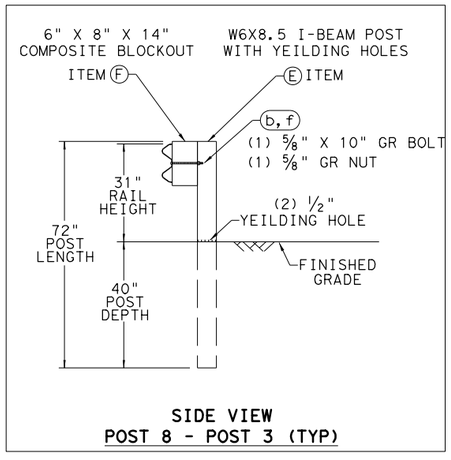

SIDE VIEW
POST 8 - POST 3 (TYP)

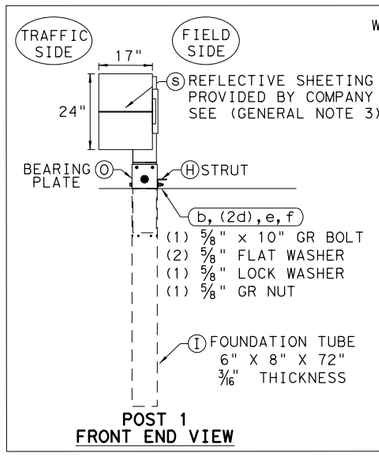

POST 1
FRONT END VIEW

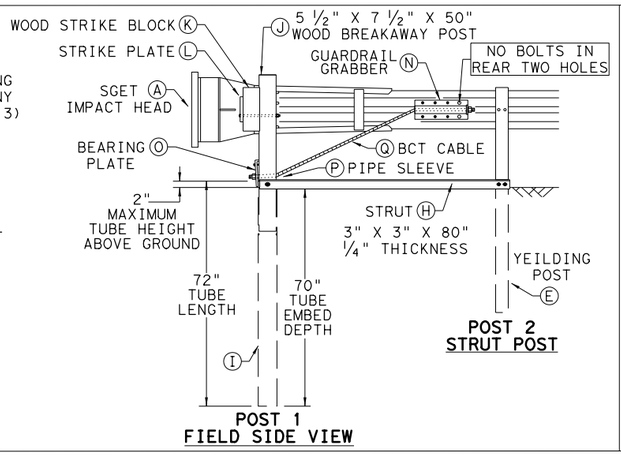

POST 1
FIELD SIDE VIEW

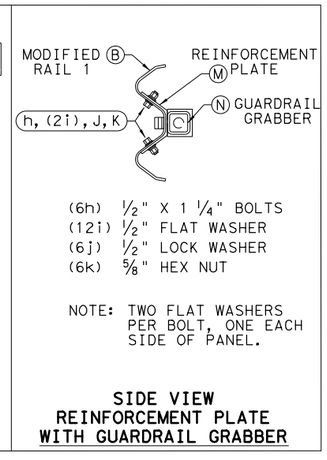

SIDE VIEW
REINFORCEMENT PLATE
WITH GUARDRAIL GRABBER

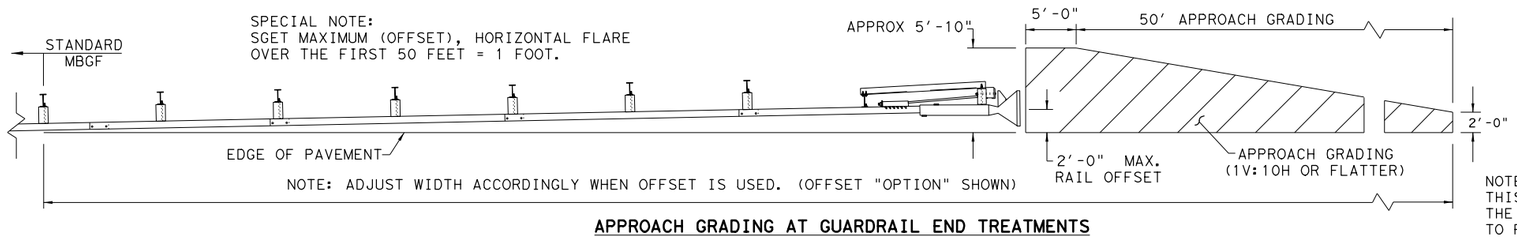

APPROACH GRADING AT GUARDRAIL END TREATMENTS

NOTE:
THIS STANDARD IS A BASIC REPRESENTATION OF THE SGET TERMINAL SYSTEM AND IS NOT INTENDED TO REPLACE THE MANUFACTURER'S ASSEMBLY MANUAL.

Texas Department of Transportation
Design Division Standard

SPIG INDUSTRY, LLC
SINGLE GUARDRAIL TERMINAL
SGET - TL-3 - MASH
SGT(15)31-20

FILE: sgt15320.dgn	DN: TxDOT	CK: KM	DW: VP	CK: VP		
©TxDOT: APRIL 2020	CONT	SECT	JOB		HIGHWAY	
REVISIONS	0912	73	215		FM 270, ETC	
	DIST	COUNTY			SHEET NO.	
	HOU	GALVESTON			176	

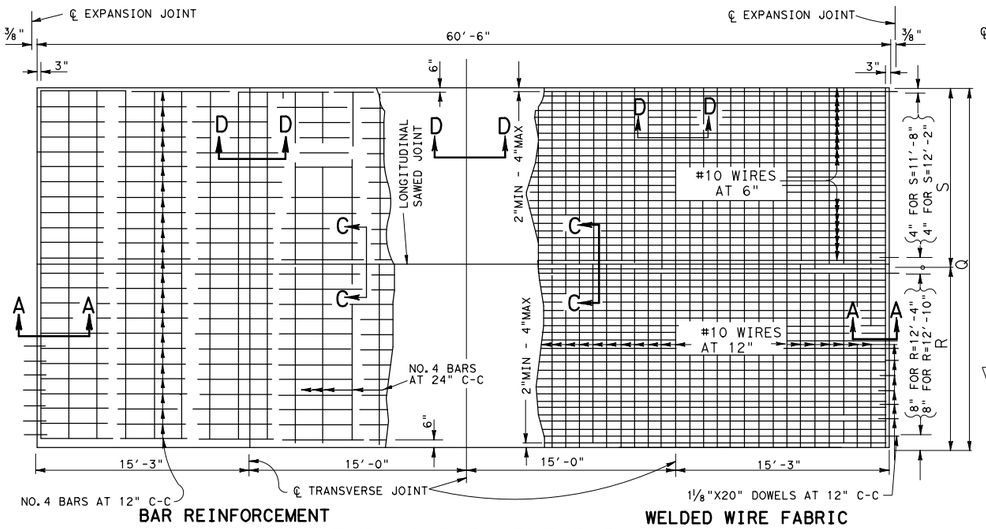

BAR REINFORCEMENT

WELDED WIRE FABRIC

TWO LANE PAVEMENT PLAN

	WIDTH - Q		
	24'-0"	24'-6"	25'-0"
R	12'-4"	12'-4"	12'-10"
S	11'-8"	12'-2"	12'-2"

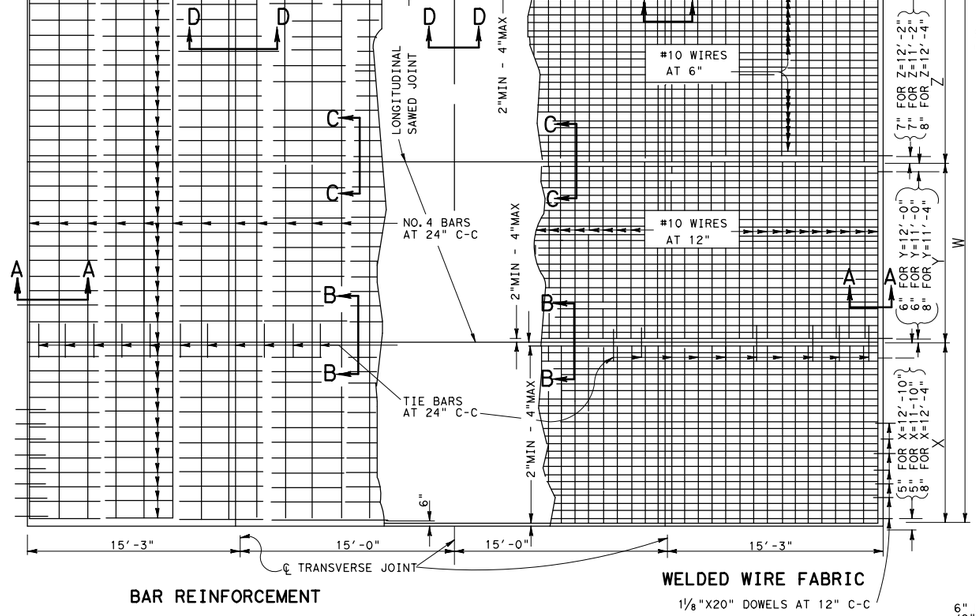

BAR REINFORCEMENT

WELDED WIRE FABRIC

1 1/8"X20" DOWELS AT 12" C-C

THREE LANE PAVEMENT PLAN

	WIDTH - W		
	37'-0"	36'-0"	34-0"
X	12'-10"	12'-4"	11'-10"
Y	12'-0"	11'-4"	11'-0"
Z	12'-2"	12'-4"	11'-2"

D = DIAMETER
R = RADIUS
T = THICKNESS

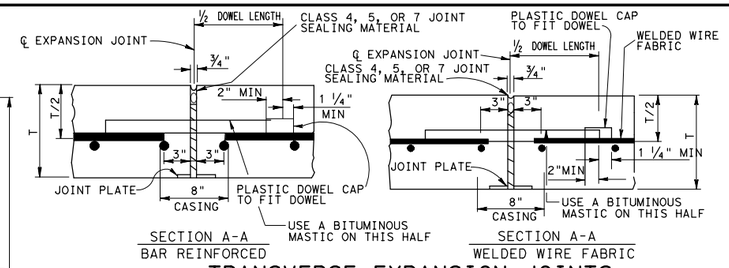

SECTION A-A
BAR REINFORCED

SECTION A-A
WELDED WIRE FABRIC

TRANSVERSE EXPANSION JOINTS

NOTE: DOWEL BARS CONFORMING TO ASTM A615 OR A616 GRADE 60 ARE ACCEPTABLE

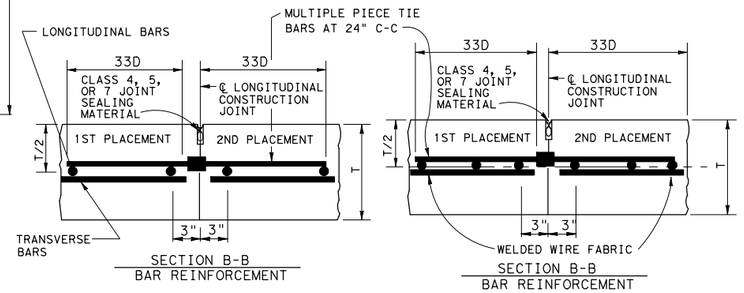

SECTION B-B
BAR REINFORCEMENT

SECTION B-B
BAR REINFORCEMENT

LONGITUDINAL CONSTRUCTION JOINTS

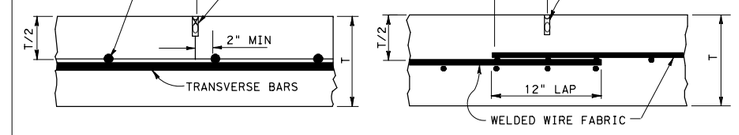

SECTION C-C
BAR REINFORCEMENT

SECTION C-C
WELDED WIRE FABRIC

LONGITUDINAL SAWED JOINTS

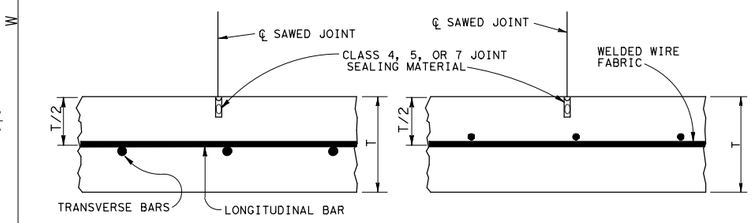

SECTION D-D
BAR REINFORCEMENT

SECTION D-D
BAR REINFORCEMENT

TRANSVERSE SAWED JOINTS

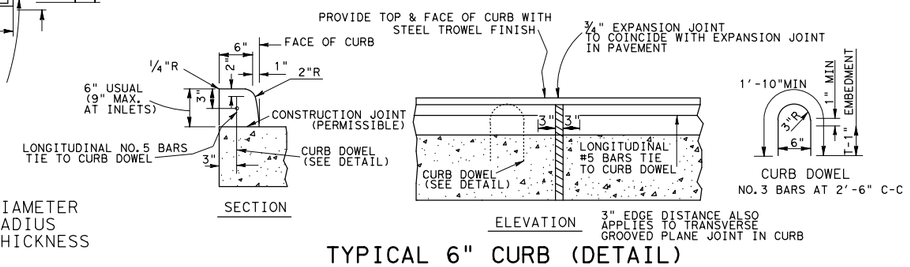

SECTION

ELEVATION

3" EDGE DISTANCE ALSO APPLIES TO TRANSVERSE GROOVED PLANE JOINT IN CURB

TYPICAL 6" CURB (DETAIL)

GENERAL NOTES

1. MULTIPLE PIECE TIE BARS ARE REQUIRED AT LONGITUDINAL CONSTRUCTION JOINTS. USE MULTIPLE PIECE TIE BAR ASSEMBLIES WITH STOP TYPE COUPLINGS AND WITH THREADS ON THE BARS. ENSURE THE MULTIPLE PIECE TIE BAR ASSEMBLIES DEVELOP A MINIMUM ULTIMATE TENSILE STRENGTH EQUAL TO 1.25 TIMES THE YIELD STRENGTH OF THE TRANSVERSE BARS BEING JOINED. USE DEFORMED REINFORCING BARS FOR TIE BARS. TIE BAR ASSEMBLIES MADE FROM STEELS OTHER THAN ASTM GRADE 60 AND WITH DEFORMATIONS OTHER THAN ASTM STANDARD MAY BE USED IF IT CAN BE PROVEN TO THE ENGINEER THAT THEY ARE IN EVERY RESPECT THE EQUAL OF THE ASSEMBLIES SPECIFIED. LABORATORY TESTING OF THE PROPOSED ASSEMBLIES, AT THE CONTRACTOR'S EXPENSE, MAY BE REQUIRED.
2. FORM CONSTRUCTION JOINTS WITH METAL OR WOOD FORMS EQUAL IN DEPTH TO THE NOMINAL DEPTH OF THE PAVEMENT OR BY OTHER MEANS APPROVED PRIOR TO THEIR USE.
3. SAW LONGITUDINAL AND TRANSVERSE JOINTS AS SOON AS SAWING CAN BE ACCOMPLISHED WITHOUT DAMAGE TO THE PAVEMENT AND BEFORE 24 HOURS AFTER PLACING THE CONCRETE, THE EXACT TIME WILL BE APPROVED BY THE ENGINEER. PREFORMED JOINT WITH ASPHALT STRIP IS NOT ACCEPTABLE.
4. LONGITUDINAL JOINTS ARE SHOWN OFFSET FOUR INCHES FROM THE THEORETICAL LANE LINE AND MAY BE OFFSET TO EITHER SIDE IF THE WIDTH OF THE WIRE FABRIC IS PROPERLY ADJUSTED.
5. ONE OF THE LONGITUDINAL JOINTS OF PAVEMENT SLABS WIDER THAN TWO LANES MAY BE A CONSTRUCTION JOINT. FOR PAVEMENT SLABS WIDER THAN 15 FT. PROVIDE A LOGITUDINAL SAWED JOINT UNLESS OTHERWISE DIRECTED.
6. FORM THE JOINT SEAL SPACE AT TRANSVERSE EXPANSION JOINTS BY USING A STRAIGHT FORM PLACED BEHIND THE LONGITUDINAL FLOAT. LOOSEN THE FORM AS SOON AS THE CONCRETE WILL RETAIN ITS SHAPE AND EDGE WITH AN APPROVED EDGING TOOL. TOOL BOTH EDGES OF LONGITUDINAL CONSTRUCTION JOINTS TO A 1/8 IN. RADIUS AT THE PAVEMENT SURFACE.
7. DO NOT DISCHARGE CONCRETE FROM THE MIXER DIRECTLY ON TOP OF OR ON THE SIDES OF THE EXPANSION JOINT ASSEMBLIES.
8. LAP TRANSVERSE EDGES OF SHEETS OF WELDED WIRE FABRIC 12 INCHES EXCEPT AT TRANSVERSE EXPANSION JOINTS. LAP LONGITUDINAL EDGES 6 INCHES EXCEPT AT LONGITUDINAL CONSTRUCTION JOINTS.
9. DOWEL BARS MAY BE COATED WITH STAINLESS STEEL, MONEL METAL, OR IN ACCORDANCE WITH THE ITEM "REINFORCING STEEL" SECTION ON EPOXY COATING; WITH A WELDED DOWEL ASSEMBLY SUPPORT, AS APPROVED. ENSURE THE CASING CONFORMS TO THE REQUIREMENTS OF ONE OF THE GRADES OF ASTM AI67-70 OR AI76-71 AND IS NOT LESS THAN 0.010 INCH THICK. PROVIDE A CASING AT LEAST 8 INCHES LONG AND THAT COVERS THE MIDDLE 8 INCHES OF THE DOWEL.
10. SECURE DOWELS PARALLEL TO THE PAVEMENT SURFACE AND PERPENDICULAR TO THE JOINT WITH THE AID OF APPROVED WELDED WIRE BASKET ARRANGEMENTS. ENSURE WELDED WIRE BASKET ARRANGEMENTS DO NOT CROSS THE EXPANSION JOINT. UNIFORMLY COAT DOWELS WITH A BITUMINOUS MASTIC ON THE END WITH THE DOWEL CAP.
11. DO NOT BEND TIE BARS AND DOWEL BARS. TO PREVENT DISPLACEMENT OF WIRE FABRIC BY CONCRETE PLACEMENT, TIE THE FABRIC PANEL TOGETHER AND TIE THE INITIAL FABRIC PANELS OF EACH SLAB TO THE DOWEL BASKET OR AS DIRECTED.
12. TOOL PAVEMENT EDGES TO A RADIUS OF 1/8 IN. WITH AN APPROVED EDGING TOOL.
13. DETAILS FOR PAVEMENT WIDTH, PAVEMENT THICKNESS, AND CROWN-SLOPE ARE ELSEWHERE SHOWN ON THE PLANS.
14. THE CONTRACTOR HAS THE OPTION OF USING WELDED WIRE FABRIC OR BAR REINFORCEMENT. LOCATE THE LONGITUDINAL STEEL AT THE CENTER OF THE SLAB. TAKE NECESSARY PRECAUTIONS TO INSURE THAT THE FINAL POSITION OF STEEL IS WITHIN 1/2 IN. OF THE SLAB CENTER. ENSURE THE LONGITUDINAL AND TRANSVERSE STEEL SPACING DOES NOT VARY MORE THAN ONE-TWELFTH OF SPACING SHOWN.
15. LONGITUDINAL STEEL MAY BE SPLICED WITH 33 TIMES BAR DIAMETER LAPS.
16. FOR LANE WIDTHS NOT SHOWN OR FOR VARIABLE PANEL LENGTHS AND WIDTHS, SPACE REINFORCING STEEL AND DOWELS AS DIRECTED.
17. USE APPROVED BAR MAT CHAIRS. DO NOT EXCEED CHAIR SPACING OF 30 IN. C-C (TRANSVERSE) AND 48 IN. C-C (LONGITUDINAL). GALVANIZING THE CHAIRS IS NOT REQUIRED.
18. OBTAIN BOARDS FOR EXPANSION JOINT FILLER FROM REDWOOD TIMBER.
19. PROVIDE AND CONSTRUCT THE JOINT PLATE AS APPROVED.
20. WHEN CURB IS PLACED SEPARATELY FROM THE CONCRETE PAVEMENT, PROVIDE THE REINFORCING STEEL AS SHOWN IN THE CURB DETAIL. THE CURB REINFORCING STEEL MAY BE OMITTED WHEN THE CURB IS PLACED MONOLITHICALLY.

(GENERAL NOTES CONTINUED ON SHEET 2 OF 2)

Texas Department of Transportation
Houston District

JOINTED REINFORCED CONCRETE PAVEMENT DETAILS

(FOR PAVEMENT THICKNESS 10 INCHES OR LESS)

JRCP SHEET 1 OF 2

FILE: STDB-2.dgn	DN:	CK:	DW:	CK:	
©TxDOT MAR.2004	DIST	FED REG	PROJECT NO.		SHEET
REVISIONS 5/05 2004 SPECS 7/2010 ADDED NOTE 8/2015 MODIFIED NOTES	HOU	6			177
	COUNTY	CONTROL	SECT	JOB	HIGHWAY
	GALVESTON	0912	73	215	FM 270 ETC

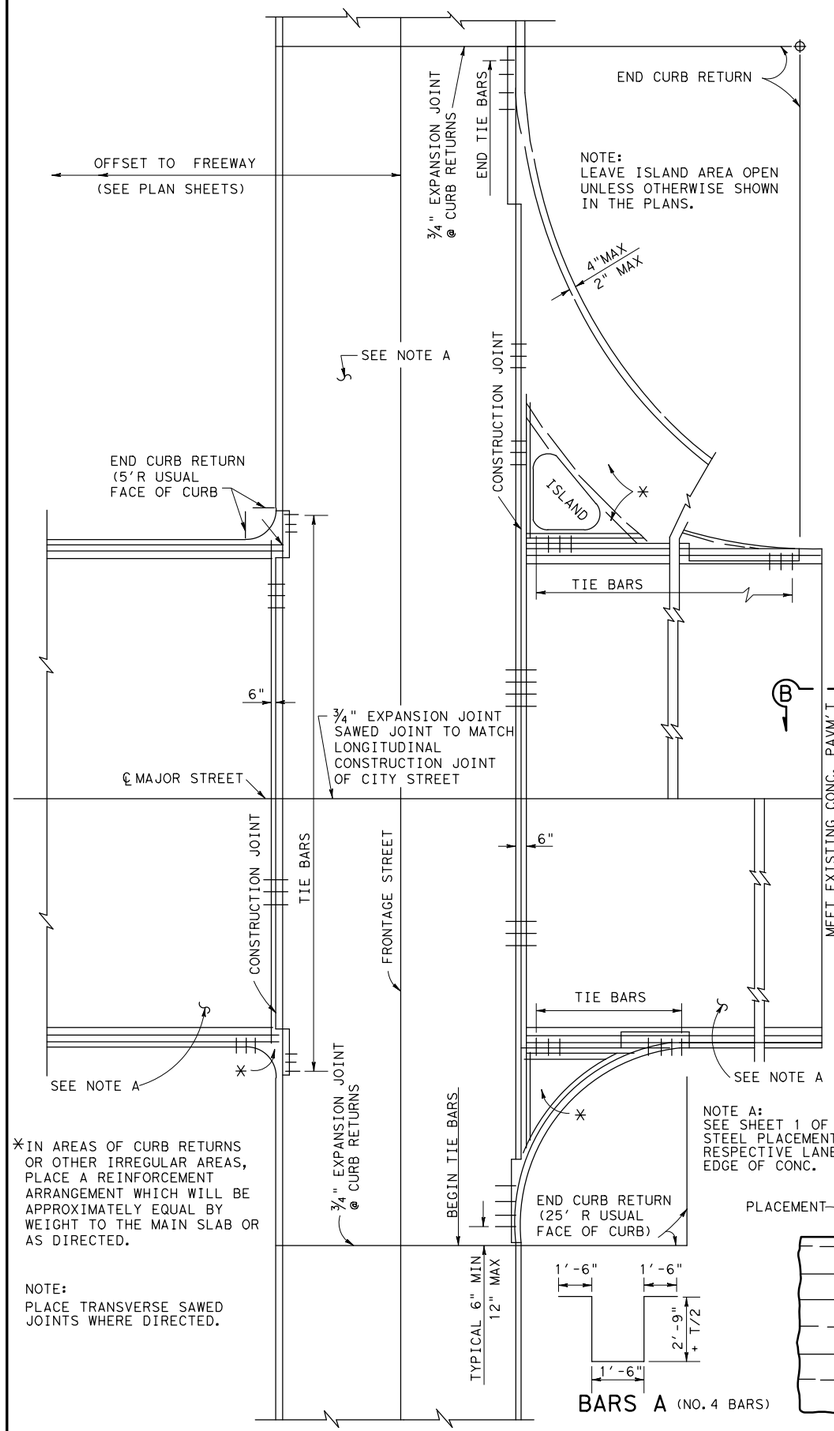

INTERSECTION OF MAJOR STREET WITH FRONTAGE STREET TYPICAL REINFORCING PLAN

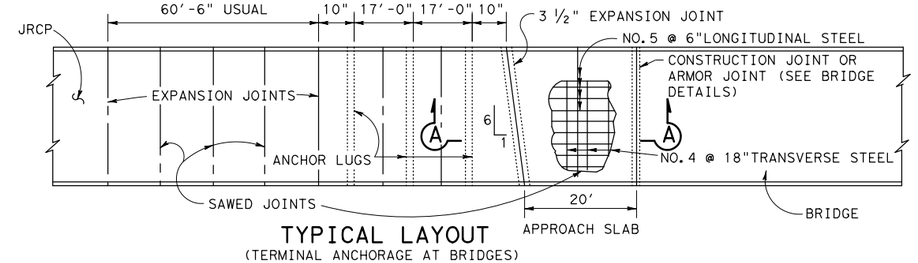

TYPICAL LAYOUT
(TERMINAL ANCHORAGE AT BRIDGES)

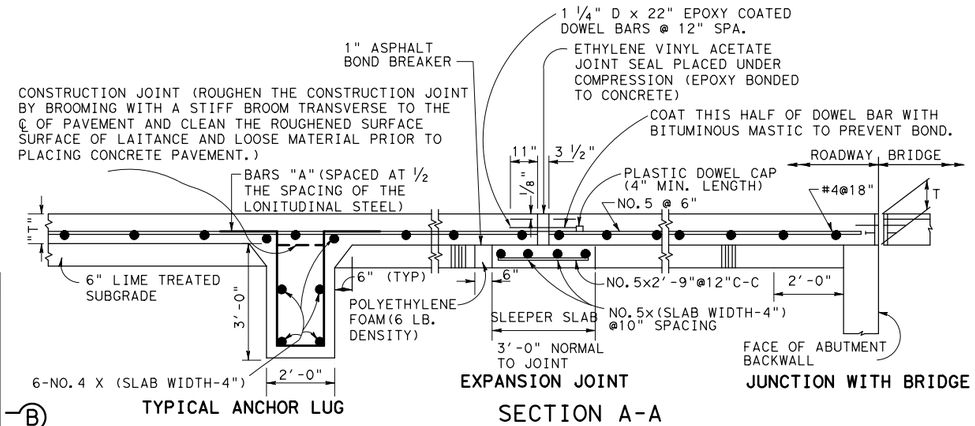

TYPICAL ANCHOR LUG | **EXPANSION JOINT** | **JUNCTION WITH BRIDGE**

SECTION A-A

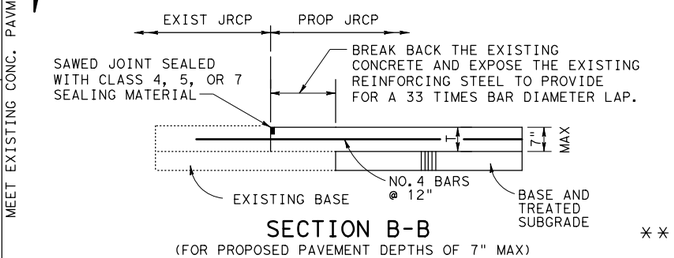

SECTION B-B
(FOR PROPOSED PAVEMENT DEPTHS OF 7" MAX)

**

REPLACE ANY BENT LONGITUDNIAL REINFORCING. IF THERE IS NOT SUFFICIENT EXPOSED REINFORCING TO PROVIDE A MINIMUM OF A 33 TIMES BAR DIAMETER LAP, REMOVE THE EXISTING PAVEMENT AND SUFFICIENTLY EXPOSE THE EXISTING REINFORCING TO PROVIDE A 33 TIMES BAR DIAMETER LAP. REPLACE ANY SHEAR BARS THAT ARE DISTURBED, BY DRILLING AND GROUTING AS REQUIRED BY NOTE #29. PERFORM THIS CORRECTIVE ACTION AT NO EXPENSE TO THE DEPARTMENT.

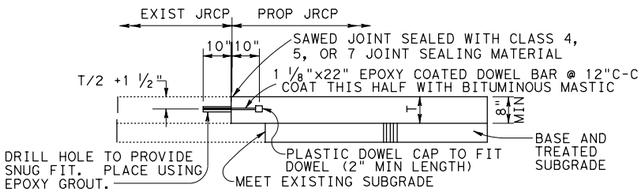

SECTION B-B
(FOR PROPOSED PAVEMENT DEPTHS OF 8" MIN)

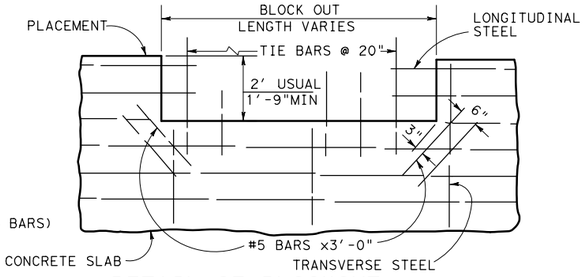

DETAIL OF BLOCKOUT

*OMIT TIE BARS @ INLET BLOCK-OUT

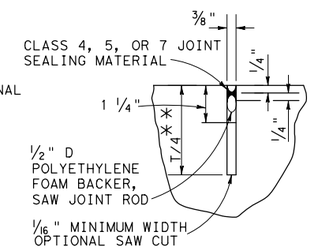

SAWED JOINT

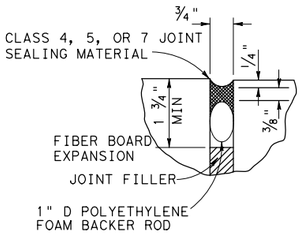

EXPANSION JOINTS

** IF SILICEOUS RIVER GRAVEL IS USED AS THE COARSE AGGREGATE, THIS DEPTH IS T/3.

JOINT SEALING DETAILS

GENERAL NOTES (CONTINUED FROM SHEET 1 OF 2)

21. CONSTRUCT ANCHOR LUGS, EXPANSION JOINTS, AND SLEEPER SLABS AS DETAILED IN SECTION A-A. THESE WILL BE PAID FOR IN ACCORDANCE WITH ITEM, "CONCRETE PAVEMENT TERMINALS."
22. REINFORCING STEEL FOR TERMINAL ANCHOR SYSTEMS MAY BE GRADE 40 OR GRADE 60.
23. PLACE CONCRETE FOR ANCHOR LUGS AS SOON AS POSSIBLE AFTER COMPLETING EXCAVATION, TO PRESERVE THE INHERENT SOIL CHARACTERISTICS. EXCAVATING FOR AND PLACING CONCRETE FOR ANCHOR SYSTEM MAY BE IN PREFORMED SECTIONS CORRESPONDING TO THE WIDTH OF PAVING PLACEMENT.
24. APPLY A STEEL TROWEL FINISH TO SLEEPER SLABS AND AND COAT WITH AN ASPHALT BOND BREAKER.
25. THE DETAILS FOR ANCHORS, LUGS, EXPANSION JOINTS, AND SLEEPER SLABS ARE NOT APPLICABLE UNLESS SHOWN ELSEWHERE IN THE PLANS.
26. APPROACH SLAB WILL BE PAID FOR IN ACCORDANCE WITH THE ITEM "CONCRETE STRUCTURES."
27. WITHIN 5 MINUTES OF SAWING, COMPLETELY REMOVE THE RESULTING SLURRY FROM THE JOINT BY FLUSHING WITH HIGH PRESSURE WATER. THEN ALLOW THE JOINT TO DRY FOR A MINIMUM OF 48 HOURS BEFORE SANDBLASTING THE JOINT.
28. DO NOT SHEAR CUT DOWEL BARS.
29. SIZE ADDITIONAL SHEAR BARS AS LONGITUDIAL BARS AND SPACE THEM MIDWAY BETWEEN ALTERNATE LONGITUDINAL BARS ALONG THE TRANSVERSE CONSTRUCTION JOINT FORMED AT THE LEAVE-OUT.
30. IF THE CONCRETE DESIGN REQUIRES GREATER THAN 5.5 SACKS OF CEMENTITIOUS MATERIAL PER CUBIC YARD, WRITTEN APPROVAL BY THE AREA ENGINEER WILL BE REQUIRED. ENSURE CONCRETE PAVEMENT MIXES PLACED FROM APRIL 1 TO OCTOBER 31 CONTAIN A MINIMUM OF 25 PERCENT BY WEIGHT OF CLASS "F" FLY ASH.
31. IN LOCATIONS WHERE THE PLANS CALL FOR FAST TRACK CONCRETE PAVEMENT IN LIEU OF JRCP (LAID ON COMPACTED OR STABILIZED SUBGRADE), USE DETAILS IN THIS STANDARD IN CONJUNCTION WITH THE APPROPRIATE FAST TRACK CONCRETE SPECIFICATION. IF THE JRCP IS LAID UPON A BASE STRUCTURE, ADD 3" TO THE FAST TRACK PAVEMENT THICKNESS TO COMPENSATE FOR THE BASE.

Texas Department of Transportation
Houston District

JOINTED REINFORCED CONCRETE PAVEMENT DETAILS
EXPANSION JOINT DESIGN
(FOR PAVEMENT THICKNESS 10 INCHES OR LESS)

JRCP SHEET 2 OF 2

FILE: STDB-2.dgn	DN:	CK:	DW:	CK:	
©TxDOT MAR. 2004	DIST	FED REG	PROJECT NO.		SHEET
REVISIONS 5/05 2004 SPECS 7/2010 ADDED NOTE 9/2013 ADDED NOTE 8/2015 MODIFIED NOTES	HOU	6			178
	COUNTY	CONTROL	SECT	JOB	HIGHWAY
	GALVESTON	0912	73	215	FM 270 ETC

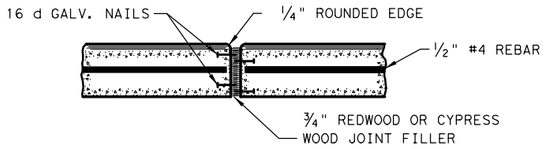

TYPICAL CURB EXPANSION JOINT DETAIL

EXPANSION JOINTS TO BE PLACED AT BEGINNING AND END OF CURVES, DRIVEWAYS WHEELCHAIR RAMPS, INLETS, ILLUMINATION/ SIGNAL FOUNDATIONS AND OTHER FIXED OBJECTS.

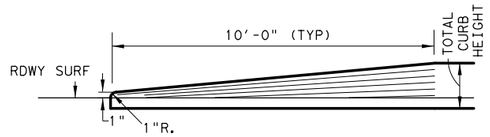

TRANSITION FOR CONCRETE CURB ENDS

SEE CURB DETAIL FOR REINFORCEMENT

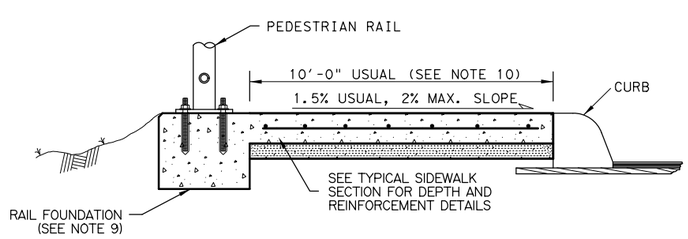

TYPICAL SIDEWALK SECTION WITH PEDESTRIAN RAIL

GENERAL NOTES:

1. CONCRETE CURB TYPE 1 AND 2 SHOWN SHALL MEET THE MINIMUM SPECIFICATION REQUIREMENTS OF CLASS "A" CONCRETE PER ITEM 529 AND 421.
2. ALL REINFORCING STEEL SHALL BE GRADE 60
3. WHERE CONCRETE CURB IS PLACED ON EXISTING CONCRETE PAVEMENT, THE PAVEMENT SHALL BE DRILLED AND THE REINFORCING BARS GROUTED IN PLACE.
4. EXPANSION AND CONTRACTION JOINTS SHALL BE CONSTRUCTED TO MATCH PAVEMENT JOINTS IN ALL CURBS AND CURB AND GUTTER ADJACENT TO JOINTED CONCRETE PAVEMENT. WHERE PLACEMENT OF CURB OR CURB AND GUTTER IS NOT ADJACENT TO CONCRETE PAVEMENT, EXPANSION JOINTS SHALL BE PROVIDED AT STRUCTURES, CURB RETURNS AT STREETS, AND AT LOCATIONS DIRECTED BY THE ENGINEER.
5. VERTICAL AND HORIZONTAL DOWEL BARS AND TRANSVERSE REINFORCING BARS SHALL BE PLACED AT 4 FEET C-C, UNLESS OTHERWISE SHOWN.
6. ONE-HALF INCH EXPANSION JOINT MATERIAL SHALL BE PROVIDED WHERE CURB OR CURB AND GUTTER IS ADJACENT TO SIDEWALK OR RIPRAP. THIS IS SUBSIDIARY TO THE CURB, ITEM 529.
7. LAYDOWN CURB AT DRIVEWAYS WILL BE PAID AS SUBSIDIARY TO ITEM 530.
8. FOR SIDEWALK DETAILS AT DRIVEWAYS, SEE SAN ANTONIO DISTRICT STANDARD "DRIVEWAY DETAILS".
9. SEE PEDESTRIAN HANDRAIL DETAILS STANDARD "PRD" FOR MORE INFORMATION. CONCRETE RAIL FOUNDATION TO BE POURED WITH THE SIDEWALK BUT PAYMENT IS SUBSIDIARY TO ITEM 450 "RAILING".
10. CLEAR SIDEWALK WIDTH EXCLUDING THE PEDESTRIAN RAIL FOUNDATION SHALL BE 10' UNLESS OTHERWISE SPECIFIED IN THE PLANS

STATE OF TEXAS
JOHANNA TORRES
130063
LICENSED
PROFESSIONAL ENGINEER
8/1/2023

© 2020 Texas Department of Transportation

MISCELLANEOUS CURB AND SIDEWALK DETAILS(MOD)

Sheet (1 of 2)

T:Engdata/Standards/MiscCurbdetails.dgn

PREPARED BY AND FOR USE OF TxDoT.

ORIGINAL DRAWING DATE: 8/1/2023

REVISIONS
09-01-08
10-10-17 sidewalk width equals 6' usual
07-22-20 9" curb + curb w/ conc pvmt det.
- -

STATE DISTRICT	FEDERAL REGION	FEDERAL AID PROJECT #	SHEET
HOU	6		179

COUNTY	CONTROL	SECTION	JOB	HIGHWAY
GALVESTON	0912	73	215	FM 270, ETC

12:02:55 PM

$FILE$

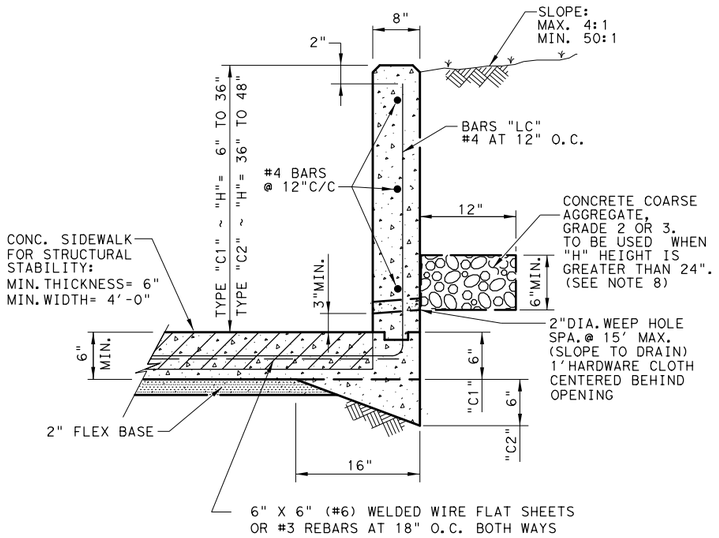

TYPE "C1" & "C2" CURB

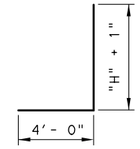

BAR "LC"

GENERAL NOTES:

1. CONCRETE FOR CURB TYPE F AND C SHOWN SHALL MEET THE MINIMUM SPECIFICATION REQUIREMENTS OF CLASS "C" CONCRETE PER ITEM 421
2. ALL REINFORCING STEEL SHALL BE GRADE 60
3. EXPANSION AND CONTRACTION JOINTS SHALL BE CONSTRUCTED TO MATCH PAVEMENT JOINITS IN ALL CURBS AND CURB AND GUTTER ADJACENT TO JOINTED CONCRETE PAVEMENT. WHERE PLACEMENT OF CURB OR CURB AND GUTTER IS NOT ADJACENT TO CONCRETE PAVEMENT, EXPANSION JOINTS SHALL BE PROVIDED AT STRUCTURES, CURB RETURNS AT STREETS, AND AT LOCATIONS DIRECTED BY THE ENGINEER.
4. VERTICAL AND HORIZONTAL DOWEL BARS AND TRANSVERSE REINFORCING BARS SHALL BE PLACED AT 4 FEET C-C, UNLESS OTHERWISE SHOWN.
5. UNTIL THE SIDEWALK IS COMPLETE, LATERAL SUPPORT FOR THE "F" CURBS WILL BE REQUIRED.
6. IF AGGREGATE IS REQUIRED PER THE DETAIL, IT IS PAID AS SUBSIDIARY TO THE CURB, ITEM 529.

DESIGN SOIL PARAMETERS:
Soil Unit Wt.= 120 pcf
Phi = 30 Degrees
Cohesion = 50 psf
Min. PI = 15
Max. PI = 30
SURCHARGE:
TYPE F CURB q = 2' Adjacent to sidewalk
Max. slope behind TYPE C Curb = 4:1
Min. Factor of Safety against sliding is 1.5.
Designed in accordance with current AASHTO Standards and Interim Specifications.

CLASS C CONCRETE PAID UNDER ITEM 531, SIDEWALK. (NOTE. ADDITIONAL CONCRETE TO MEET THE THICKENED SECTIONS REQUIRED BY THESE DETAILS IS SUBSIDIARY TO ITEM 531, CURB.)

© 2020 Texas Department of Transportation

MISCELLANEOUS CURB AND SIDEWALK DETAILS (MOD)

Sheet (2 of 2)

I:Engdata/Standards/MiscCurbdetails.dgn	PREPARED BY AND FOR USE OF TxDoT.					
ORIGINAL DRAWING DATE:	STATE DISTRICT	FEDERAL REGION	FEDERAL AID PROJECT #			SHEET
REVISIONS	HOU	6				180
09-01-08	COUNTY		CONTROL	SECTION	JOB	HIGHWAY
10-10-17 sidewalk width equals 6' usual	GALVESTON		0912	73	215	FM 270, ETC
07-22-20 9" curb + curb w/ conc pvmt det.						

8/1/2023 12:02:55 PM

$FILE$

0' 125' 250' 500'

LEGEND:

DA-X / XX.XX	DRAINAGE AREA I.D. / DRAINAGE AREAS (AC)
	DRAINAGE AREA BOUNDARY
	EXISTING ROW
	DIRECTION OF FLOW
— XX —	CONTOUR ELEVATION

NO.	DATE	REVISION	APPROVED

STATE OF TEXAS
DAVID CORNYN
138892
LICENSED
PROFESSIONAL ENGINEER
8/2/2023

Texas Department of Transportation
©2023

JONES|CARTER
Texas Board of Professional Engineers Registration No. F-23290
4350 Lockhill Selma Rd, Suite 100• San Antonio, Texas 78249 •210.494.5511

SH 96
EXTERNAL DRAINAGE AREA MAP
BEG TO STA 321+00

SHEET **01** OF **02**

DRAWN	FED. RD. DIV. NO.	FEDERAL AID PROJECT NO.		HIGHWAY NO.
CH	06			FM 270, ETC
DESIGNED	STATE	DIST.	COUNTY	SHEET NO.
DC	TEXAS	HOUSTON	GALVESTON	181
CHECKED	CONT.	SECT.	JOB	
NG	0912	73	215	
APPROVED				
DD				

PENTABLE: LCBF.tbl
PLOTDRIVER: LCBF.pltcfg
USER: do
DATE: 8/2/2023 12:54:33 AM
FILE: c:\bms\pwe101-01\daniel.ontiveros\dms22645\LCBF_CDAM_01.dgn

PLOTDRIVER: LCBF.pltcfg PENTABLE: LCBF.tbl
DATE: 8/2/2023 12:54:36 AM USER: do
FILE: c:\bms\pwe101-01\daniel.antiveros\dms22645\LCBF_CDAM_02.dgn

0' 125' 250' 500'

LEGEND:

- DA-X / XX.XX — DRAINAGE AREA I.D. / DRAINAGE AREAS (AC)
- DRAINAGE AREA BOUNDARY
- EXISTING ROW
- DIRECTION OF FLOW
- — XX — CONTOUR ELEVATION

CROSS_1B 135.20
CROSS_2 49.51
CROSS_3 54.47
CROSS_4A 26.30
CROSS_4B 33.43

MATCHLINE STA 321+00

℄ SH_96
℄ SUP_96
SH 96
130+00 EXIST ROW
165+00 EXIST ROW

NO.	DATE	REVISION	APPROVED

STATE OF TEXAS
DAVID CORNYN
138892
LICENSED
PROFESSIONAL ENGINEER
8/2/2023

Texas Department of Transportation
©2023

JONES|CARTER
Texas Board of Professional Engineers Registration No. F-23290
4350 Lockhill Selma Rd, Suite 100 • San Antonio, Texas 78249 • 210.494.5511

SH 96
EXTERNAL DRAINAGE AREA MAP
STA 321+00 TO END

SHEET 02 OF 02

DRAWN	FED. RD. DIV. NO.	FEDERAL AID PROJECT NO.		HIGHWAY NO.
CH	06			FM 270, ETC
DESIGNED	STATE	DIST.	COUNTY	SHEET NO.
DC	TEXAS	HOUSTON	GALVESTON	182
CHECKED	CONT.	SECT.	JOB	
NG	0912	73	215	
APPROVED				
DD				

PLOTDRIVER: LCBF.pltcfg
PENTABLE: LCBF.tbl
DATE: 8/2/2023 12:54:38 AM USER: do
FILE: c:\bms\pwe101-01\daniel.ontiveros\dms22645\LCBF_DAM_01.dgn

0' 50' 100' 200'

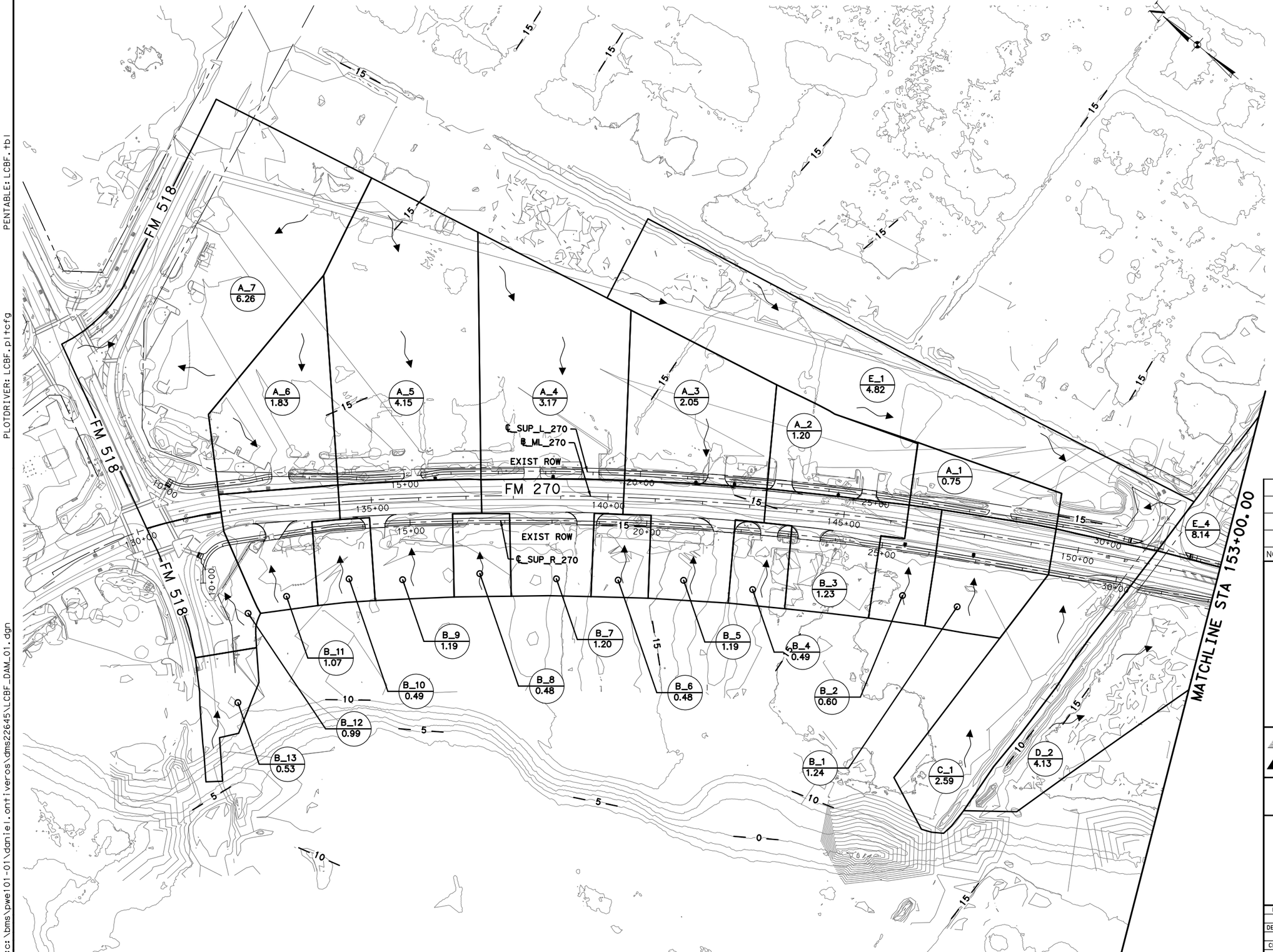

LEGEND:

- DA-X / XX.XX — DRAINAGE AREA I.D. / DRAINAGE AREAS (AC)
- DRAINAGE AREA BOUNDARY
- EXISTING ROW
- DIRECTION OF FLOW
- — XX — CONTOUR ELEVATION

NO.	DATE	REVISION	APPROVED

STATE OF TEXAS
DAVID CORNYN
138892
LICENSED
PROFESSIONAL ENGINEER
8/2/2023

Texas Department of Transportation
©2023

JONES|CARTER
Texas Board of Professional Engineers Registration No. F-23290
4350 Lockhill Selma Rd, Suite 100 • San Antonio, Texas 78249 • 210.494.5511

FM 270
DRAINAGE AREA MAP
BEG TO STA 153+00

SHEET 01 OF 14

DRAWN	FED. RD. DIV. NO.	FEDERAL AID PROJECT NO.		HIGHWAY NO.
CH	06			FM 270, ETC
DESIGNED	STATE	DIST.	COUNTY	SHEET NO.
DC	TEXAS	HOUSTON	GALVESTON	183
CHECKED	CONT.	SECT.	JOB	
NG	0912	73	215	
APPROVED				
DD				

LEGEND:

DA-X / XX.XX	DRAINAGE AREA I.D. / DRAINAGE AREAS (AC)
———	DRAINAGE AREA BOUNDARY
— - - —	EXISTING ROW
◄~	DIRECTION OF FLOW
— XX —	CONTOUR ELEVATION

NO.	DATE	REVISION	APPROVED

STATE OF TEXAS
DAVID CORNYN
138892
LICENSED
PROFESSIONAL ENGINEER
8/2/2023

Texas Department of Transportation
©2023

JONES | CARTER
Texas Board of Professional Engineers Registration No. F-23290
4350 Lockhill Selma Rd, Suite 100 • San Antonio, Texas 78249 • 210.494.5511

SH 96, FM 270
FM 270
DRAINAGE AREA MAP
STA 153+00 TO STA 177+00

SHEET 02 OF 14

DRAWN	FED. RD. DIV. NO.	FEDERAL AID PROJECT NO.		HIGHWAY NO.
CH	06			FM 270, ETC
DESIGNED	STATE	DIST.	COUNTY	SHEET NO.
DC	TEXAS	HOUSTON	GALVESTON	184
CHECKED	CONT.	SECT.	JOB	
NG	0912	73	215	
APPROVED				
DD				

PENTABLE: LCBF.tbl
PLOTDRIVER: LCBF.pltcfg
USER: do
DATE: 8/2/2023 12:54:41 AM
FILE: c:\bms\pwe101-01\daniel.ontiveros\dms22645\LCBF_DAM_02.dgn

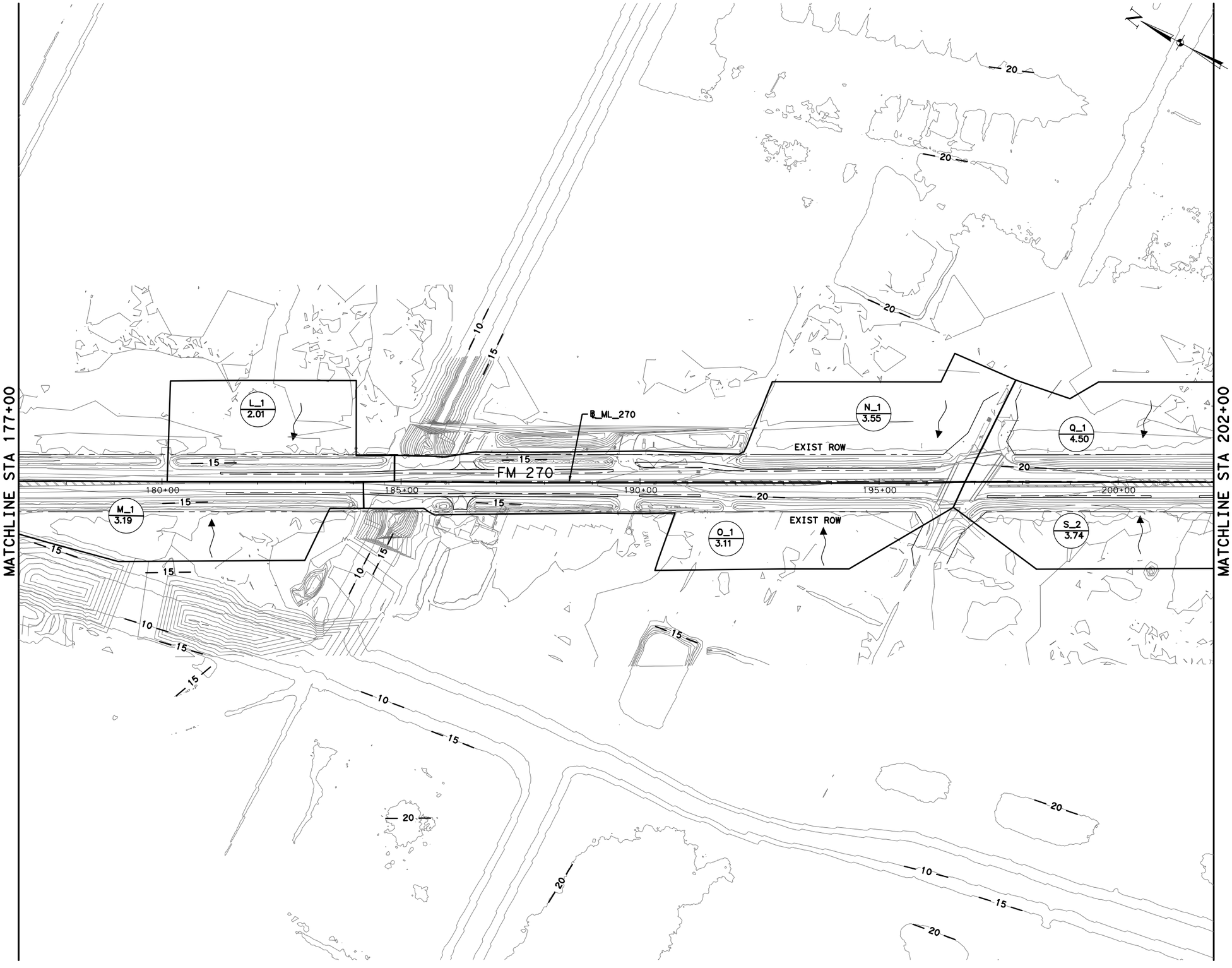

0' 50' 100' 200'

LEGEND:

DA-X / XX.XX	DRAINAGE AREA I.D. / DRAINAGE AREAS (AC)
	DRAINAGE AREA BOUNDARY
	EXISTING ROW
	DIRECTION OF FLOW
— XX —	CONTOUR ELEVATION

NO.	DATE	REVISION	APPROVED

STATE OF TEXAS
DAVID CORNYN
138892
LICENSED
PROFESSIONAL ENGINEER
8/2/2023

Texas Department of Transportation
©2023

JONES | CARTER
Texas Board of Professional Engineers Registration No. F-23290
4350 Lockhill Selma Rd, Suite 100 • San Antonio, Texas 78249 • 210.494.5511

SH 96, FM 270
FM 270
DRAINAGE AREA MAP
STA 177+00 TO STA 202+00

SHEET 03 OF 14

DRAWN	FED. RD. DIV. NO.	FEDERAL AID PROJECT NO.		HIGHWAY NO.
CH	06			FM 270, ETC
DESIGNED	STATE	DIST.	COUNTY	SHEET NO.
DC	TEXAS	HOUSTON	GALVESTON	185
CHECKED	CONT.	SECT.	JOB	
NG	0912	73	215	
APPROVED				
DD				

PENTABLE: LCBF.tbl
PLOTDRIVER: LCBF.pltcfg
USER: do
DATE: 8/2/2023 12:54:44 AM
FILE: c:\bms\pwe101-01\daniel.ontiveros\dms22645\LCBF_DAM_03.dgn

PLOTDRIVER: LCBF.pltcfg
PENTABLE: LCBF.tbl
DATE: 8/2/2023 12:54:48 AM USER: do
FILE: c:\bms\pwe101-01\daniel.ontiveros\dms22645\LCBF_DAM_04.dgn

0' 50' 100' 200'

LEGEND:

- DA-X / XX.XX — DRAINAGE AREA I.D. / DRAINAGE AREAS (AC)
- DRAINAGE AREA BOUNDARY
- EXISTING ROW
- DIRECTION OF FLOW
- — XX — CONTOUR ELEVATION

MATCHLINE STA 202+00

MATCHLINE STA 226+50

Q_1 4.50

S_2 3.74

T_3 3.95

T_2 3.63

T_1 8.29

U_2 5.56

U_1 4.24

W_1 2.61

℄ ML_270

FM 270

EXIST ROW

205+00 210+00 215+00 220+00 225+00

20 15 10

NO.	DATE	REVISION	APPROVED

STATE OF TEXAS
DAVID CORNYN
138892
LICENSED
PROFESSIONAL ENGINEER
8/2/2023

Texas Department of Transportation
©2023

JONES|CARTER
Texas Board of Professional Engineers Registration No. F-23290
4350 Lockhill Selma Rd, Suite 100 • San Antonio, Texas 78249 • 210.494.5511

SH 96, FM 270
FM 270
DRAINAGE AREA MAP
STA 202+00 TO STA 226+50

SHEET 04 OF 14

DRAWN	FED.RD. DIV.NO.	FEDERAL AID PROJECT NO.		HIGHWAY NO.
CH	06			FM 270, ETC
DESIGNED	STATE	DIST.	COUNTY	SHEET NO.
DC	TEXAS	HOUSTON	GALVESTON	186
CHECKED	CONT.	SECT.	JOB	
NG	0912	73	215	
APPROVED				
DD				

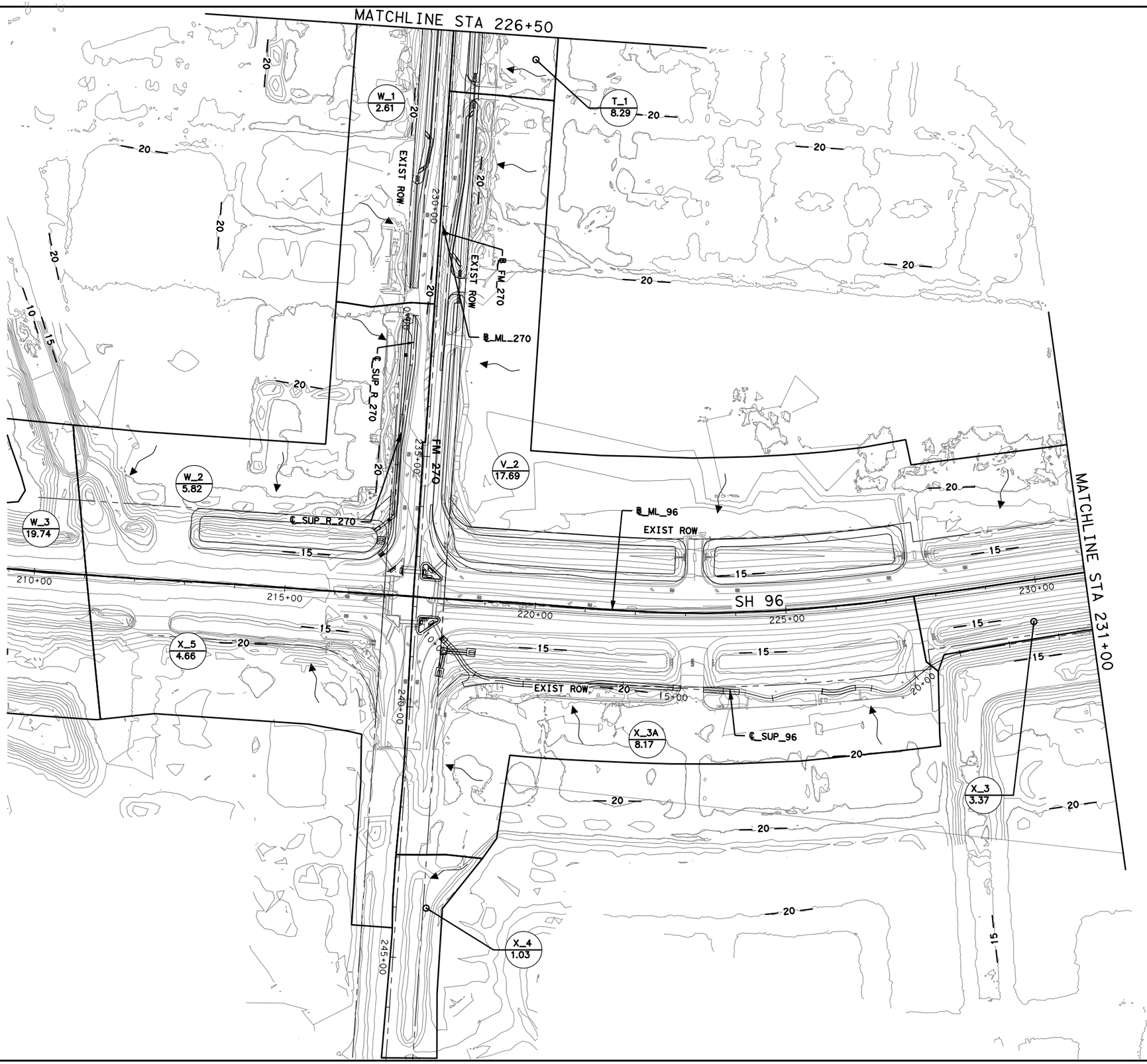

LEGEND:

- DA-X / XX.XX — DRAINAGE AREA I.D. / DRAINAGE AREAS (AC)
- DRAINAGE AREA BOUNDARY
- EXISTING ROW
- DIRECTION OF FLOW
- XX — CONTOUR ELEVATION

NO.	DATE	REVISION	APPROVED

STATE OF TEXAS
DAVID CORNYN
138892
LICENSED
PROFESSIONAL ENGINEER
8/2/2023

Texas Department of Transportation
©2023

JONES|CARTER
Texas Board of Professional Engineers Registration No. F-23290
4350 Lockhill Selma Rd, Suite 100•San Antonio, Texas 78249•210.494.5511

SH 96, FM 270
FM 270 & SH 96
DRAINAGE AREA MAP

STA 226+50 (FM 270) TO STA 231+00 (SH 96)

SHEET **05** OF **14**

DRAWN	FED.RD. DIV.NO.	FEDERAL AID PROJECT NO.		HIGHWAY NO.
CH	06			FM 270,ETC
DESIGNED	STATE	DIST.	COUNTY	SHEET NO.
DC	TEXAS	HOUSTON	GALVESTON	187
CHECKED	CONT.	SECT.	JOB	
NG	0912	73	215	
APPROVED				
DD				

PENTABLE:LCBF.tbl
PLOTDRIVER:LCBF.pltcfg
DATE:8/2/2023 12:54:51 AM USER:do
FILE:c:\bms\pwe101-01\daniel.antiveros\dms22645\LCBF_DAM_05.dgn

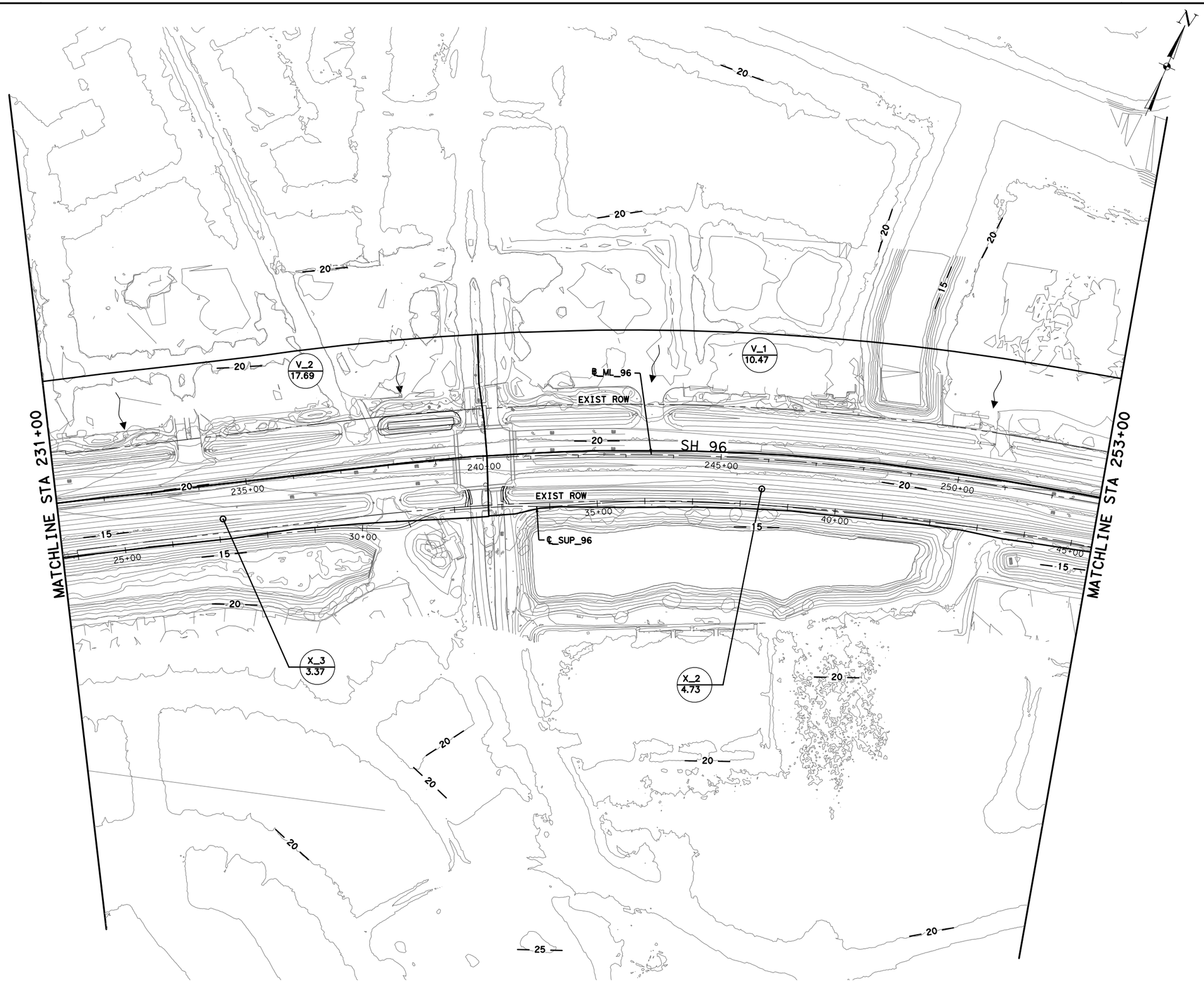

LEGEND:

- DA-X / XX.XX — DRAINAGE AREA I.D. / DRAINAGE AREAS (AC)
- DRAINAGE AREA BOUNDARY
- EXISTING ROW
- DIRECTION OF FLOW
- — XX — CONTOUR ELEVATION

NO.	DATE	REVISION	APPROVED

STATE OF TEXAS
DAVID CORNYN
138892
LICENSED
PROFESSIONAL ENGINEER
8/2/2023

Texas Department of Transportation
©2023

JONES|CARTER
Texas Board of Professional Engineers Registration No. F-23290
4350 Lockhill Selma Rd, Suite 100 • San Antonio, Texas 78249 • 210.494.5511

SH 96, FM 270
SH 96
DRAINAGE AREA MAPS
STA 231+00 TO STA STA 253+00

SHEET 06 OF 14

DRAWN	FED. RD. DIV. NO.	FEDERAL AID PROJECT NO.		HIGHWAY NO.
CH	06			FM 270, ETC
DESIGNED	STATE	DIST.	COUNTY	SHEET NO.
DC	TEXAS	HOUSTON	GALVESTON	188
CHECKED	CONT.	SECT.	JOB	
NG	0912	73	215	
APPROVED				
DD				

DATE:8/2/2023 12:54:55 AM USER:do
FILE:c:\bms\pwe101-01\daniel.ontiveros\dms22645\LCBF_DAM_06.dgn
PLOTDRIVER: LCBF.plt.cfg
PENTABLE: LCBF.tbl

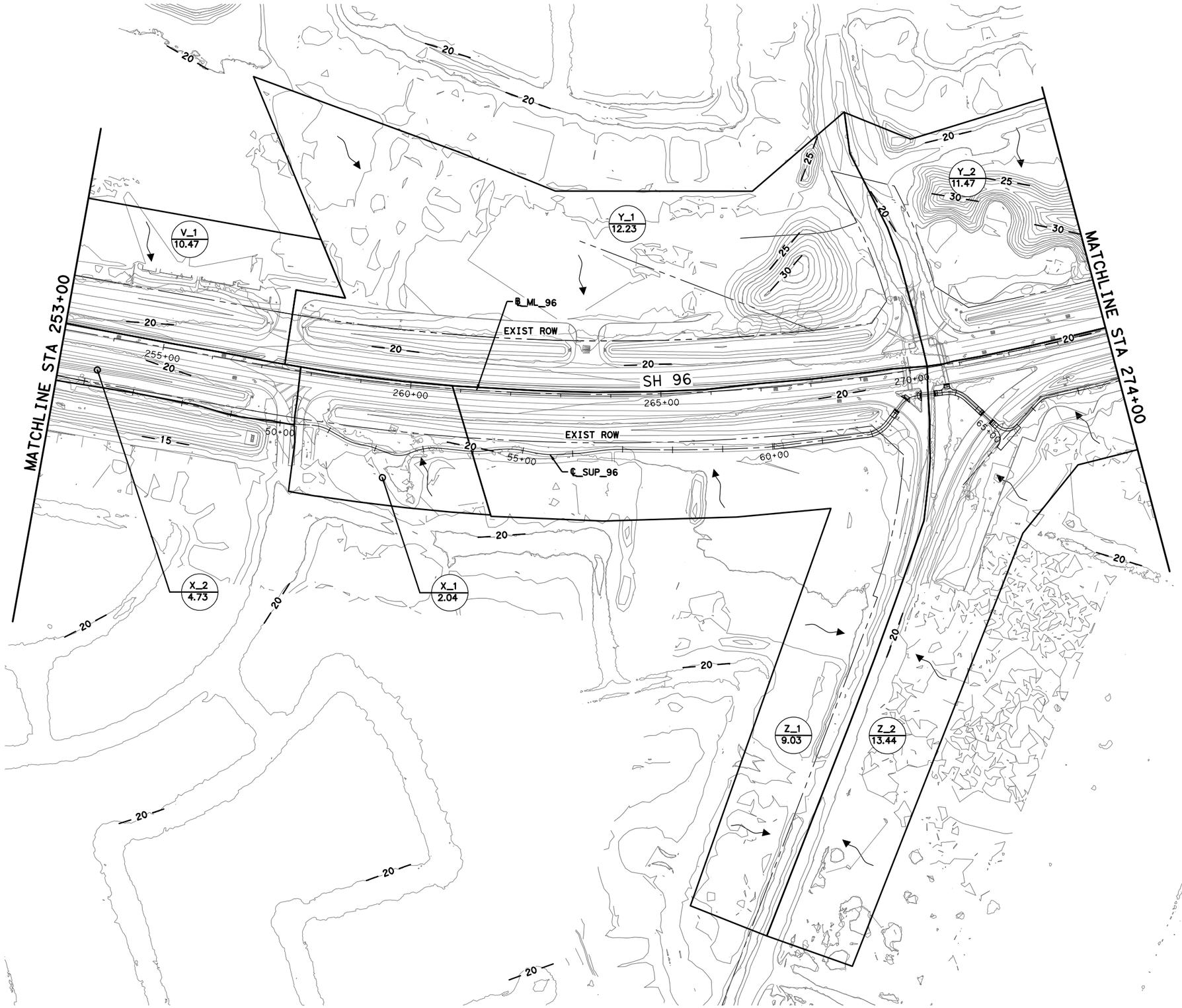

N

0′ 50′ 100′ 200′

LEGEND:

DA-X / XX.XX	DRAINAGE AREA I.D. / DRAINAGE AREAS (AC)
	DRAINAGE AREA BOUNDARY
	EXISTING ROW
	DIRECTION OF FLOW
— XX —	CONTOUR ELEVATION

NO.	DATE	REVISION	APPROVED

STATE OF TEXAS
DAVID CORNYN
138892
LICENSED
PROFESSIONAL ENGINEER
8/2/2023

Texas Department of Transportation
©2023

JONES|CARTER
Texas Board of Professional Engineers Registration No. F-23290
4350 Lockhill Selma Rd, Suite 100•San Antonio, Texas 78249•210.494.5511

SH 96, FM 270
SH 96
DRAINAGE AREA MAPS
STA 253+00 TO STA 274+00

SHEET **07** OF **14**

DRAWN	FED.RD. DIV.NO.	FEDERAL AID PROJECT NO.		HIGHWAY NO.
CH	06			FM 270, ETC
DESIGNED	STATE	DIST.	COUNTY	SHEET NO.
DC	TEXAS	HOUSTON	GALVESTON	189
CHECKED	CONT.	SECT.	JOB	
NG	0912	73	215	
APPROVED				
DD				

PENTABLE: LCBF.tbl
PLOTDRIVER: LCBF.pltcfg
DATE: 8/2/2023 12:54:58 AM USER: do
FILE: c:\bms\pwe101-01\daniel.ontiveros\dms22645\LCBF_DAM_07.dgn

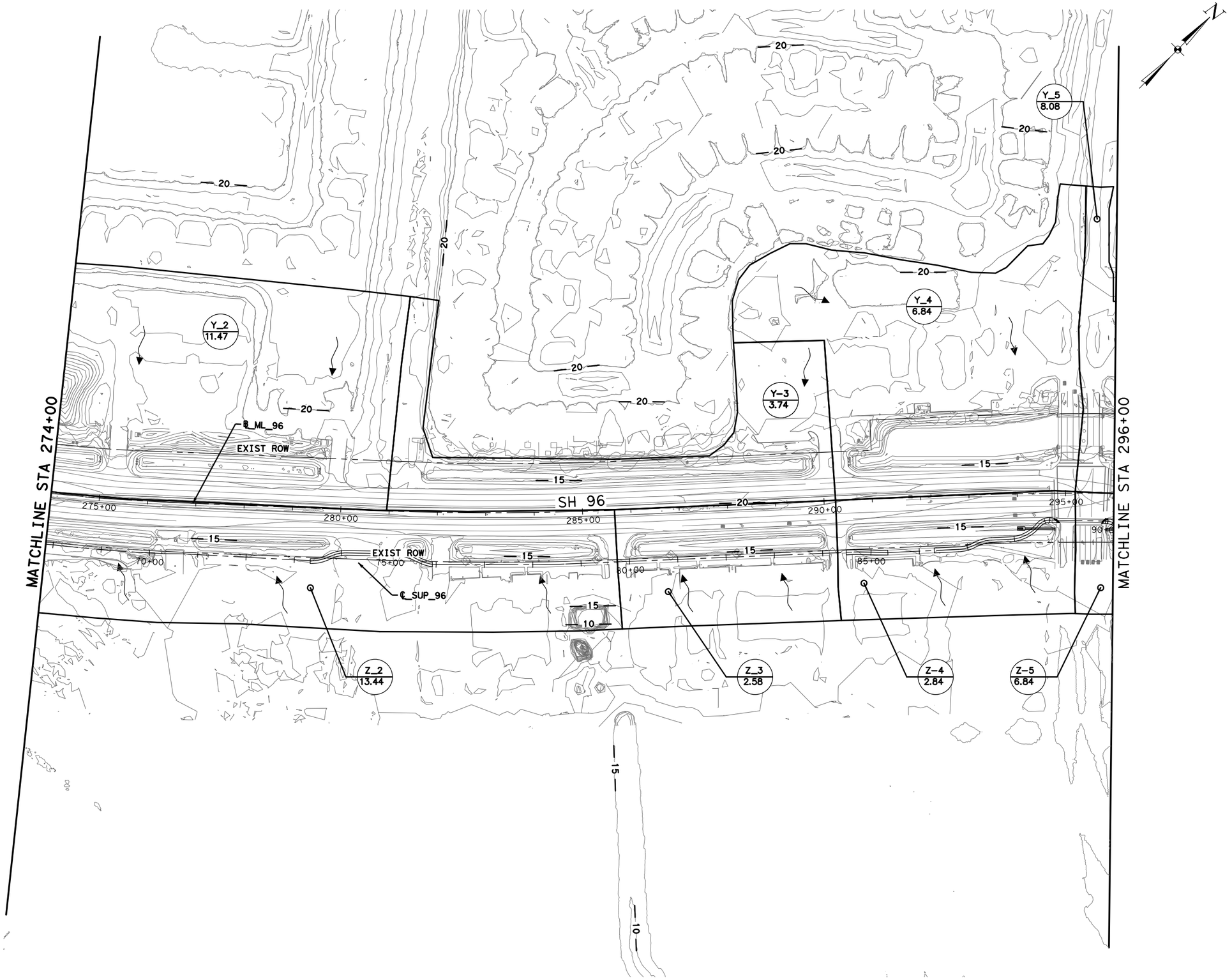

0' 50' 100' 200'

LEGEND:

DA-X / XX.XX	DRAINAGE AREA I.D. / DRAINAGE AREAS (AC)
	DRAINAGE AREA BOUNDARY
	EXISTING ROW
	DIRECTION OF FLOW
— XX —	CONTOUR ELEVATION

NO.	DATE	REVISION	APPROVED

STATE OF TEXAS
DAVID CORNYN
138892
LICENSED
PROFESSIONAL ENGINEER
8/2/2023

Texas Department of Transportation
©2023

JONES|CARTER
Texas Board of Professional Engineers Registration No. F-23290
4350 Lockhill Selma Rd, Suite 100 • San Antonio, Texas 78249 • 210.494.5511

SH 96, FM 270
SH 96
DRAINAGE AREA MAP
STA 274+00 TO STA 296+00

SHEET 08 OF 14

DRAWN	FED.RD. DIV.NO.	FEDERAL AID PROJECT NO.		HIGHWAY NO.
CH	06			FM 270, ETC
DESIGNED	STATE	DIST.	COUNTY	SHEET NO.
DC	TEXAS	HOUSTON	GALVESTON	190
CHECKED	CONT.	SECT.	JOB	
NG	0912	73	215	
APPROVED				
DD				

PLOTDRIVER: LCBF.pltcfg PENTABLE: LCBF.tbl
DATE: 8/2/2023 12:55:02 AM USER: do
FILE: c:\bms\pwe101-01\daniel.ontiveros\dms22645\LCBF_DAM_08.dgn

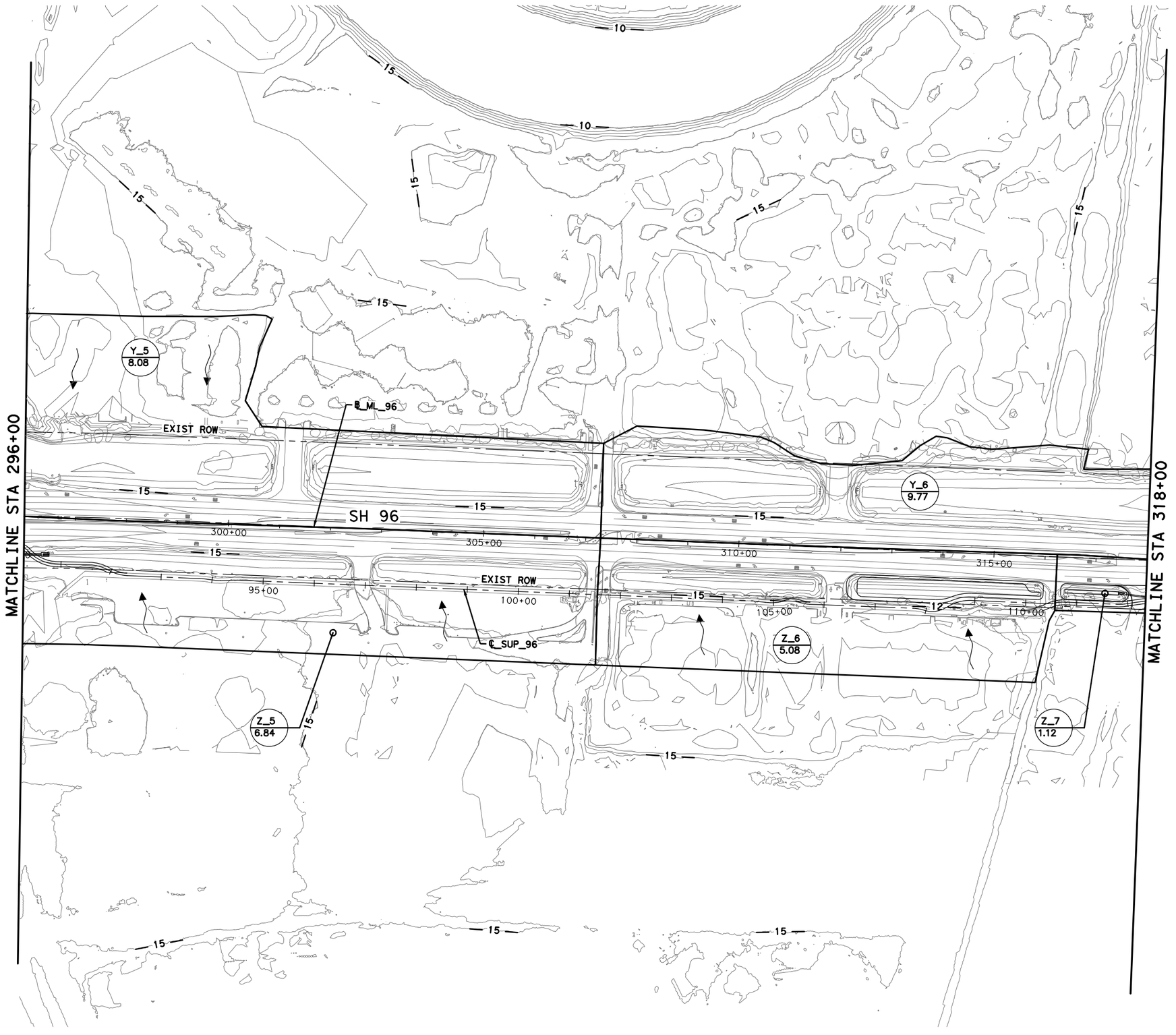

NO.	DATE	REVISION	APPROVED

STATE OF TEXAS
DAVID CORNYN
138892
LICENSED
PROFESSIONAL ENGINEER
8/2/2023

Texas Department of Transportation
©2023

JONES|CARTER
Texas Board of Professional Engineers Registration No. F-23290
4350 Lockhill Selma Rd, Suite 100• San Antonio, Texas 78249•210.494.5511

SH 96, FM 270
SH 96
DRAINAGE AREA MAPS
STA 296+00 TO STA 318+00

SHEET **09** OF **14**

DRAWN	FED.RD. DIV.NO.	FEDERAL AID PROJECT NO.		HIGHWAY NO.
CH	06			FM 270, ETC
DESIGNED	STATE	DIST.	COUNTY	SHEET NO.
DC	TEXAS	HOUSTON	GALVESTON	191
CHECKED	CONT.	SECT.	JOB	
NG	0912	73	215	
APPROVED				
DD				

PENTABLE: LCBF.tbl
PLOTDRIVER: LCBF.pltcfg
DATE: 8/2/2023 12:55:06 AM USER: do
FILE: c:\bms\pwe101-01\daniel.ontiveros\dms22645\LCBF_DAM_09.dgn

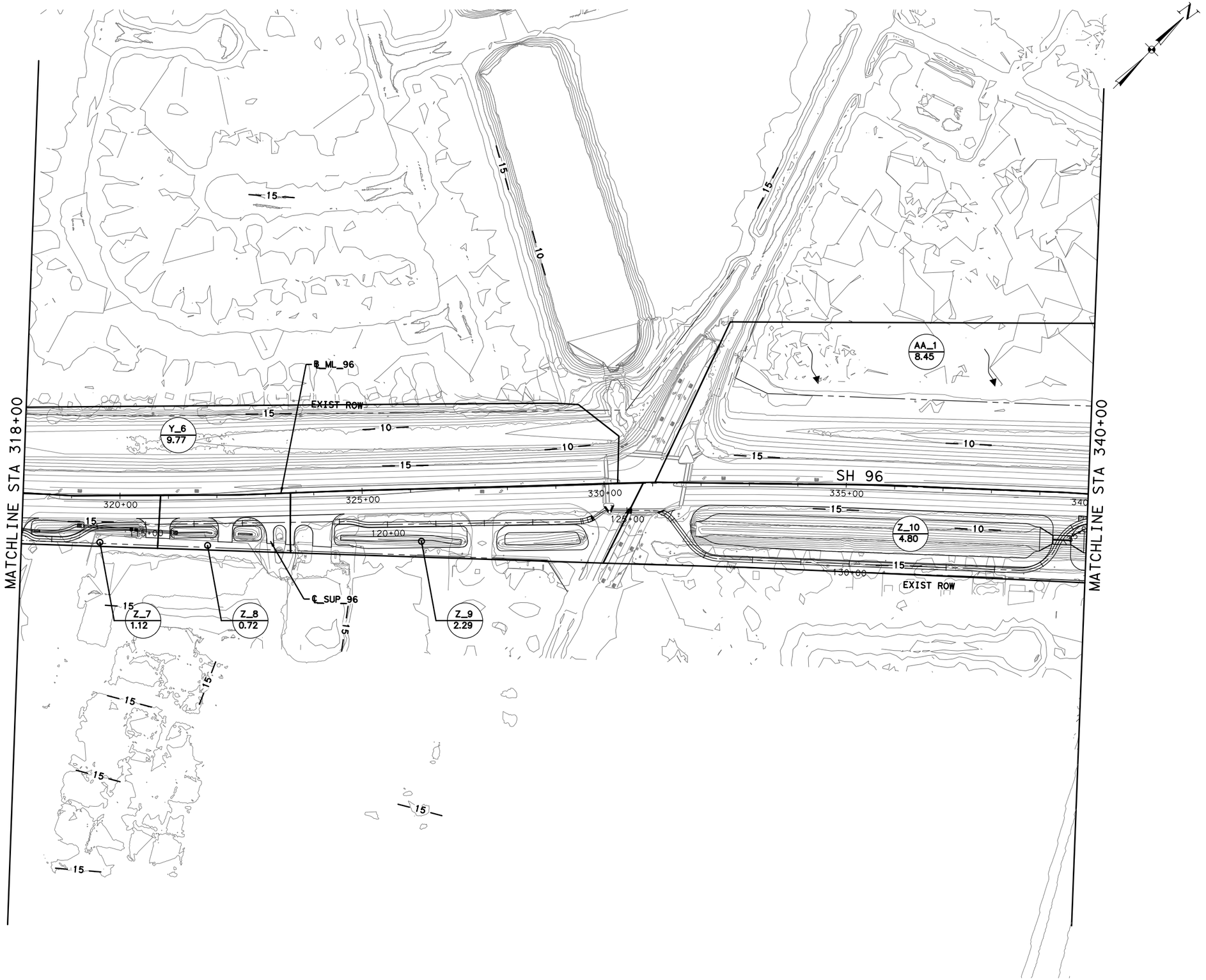

0′ 50′ 100′ 200′

LEGEND:

DA-X / XX.XX	DRAINAGE AREA I.D. / DRAINAGE AREAS (AC)
	DRAINAGE AREA BOUNDARY
	EXISTING ROW
	DIRECTION OF FLOW
— XX —	CONTOUR ELEVATION

NO.	DATE	REVISION	APPROVED

STATE OF TEXAS
DAVID CORNYN
138892
LICENSED
PROFESSIONAL ENGINEER
8/2/2023

Texas Department of Transportation
©2023

JONES|CARTER
Texas Board of Professional Engineers Registration No. F-23290
4350 Lockhill Selma Rd, Suite 100•San Antonio, Texas 78249•210.494.5511

SH 96, FM 270
SH 96
DRAINAGE AREA MAPS
STA 318+00 TO STA 340+00

SHEET **10** OF **14**

DRAWN	FED.RD. DIV.NO.	FEDERAL AID PROJECT NO.		HIGHWAY NO.
CH	06			FM 270, ETC
DESIGNED	STATE	DIST.	COUNTY	SHEET NO.
DC	TEXAS	HOUSTON	GALVESTON	192
CHECKED	CONT.	SECT.	JOB	
NG	0912	73	215	
APPROVED				
DD				

PENTABLE:LCBF.tbl
PLOTDRIVER:LCBF.pltcfg
DATE:8/2/2023 12:55:10 AM USER:do
FILE:c:\bms\pwe101-01\daniel.antiveros\dms22645\LCBF_DAM_10.dgn

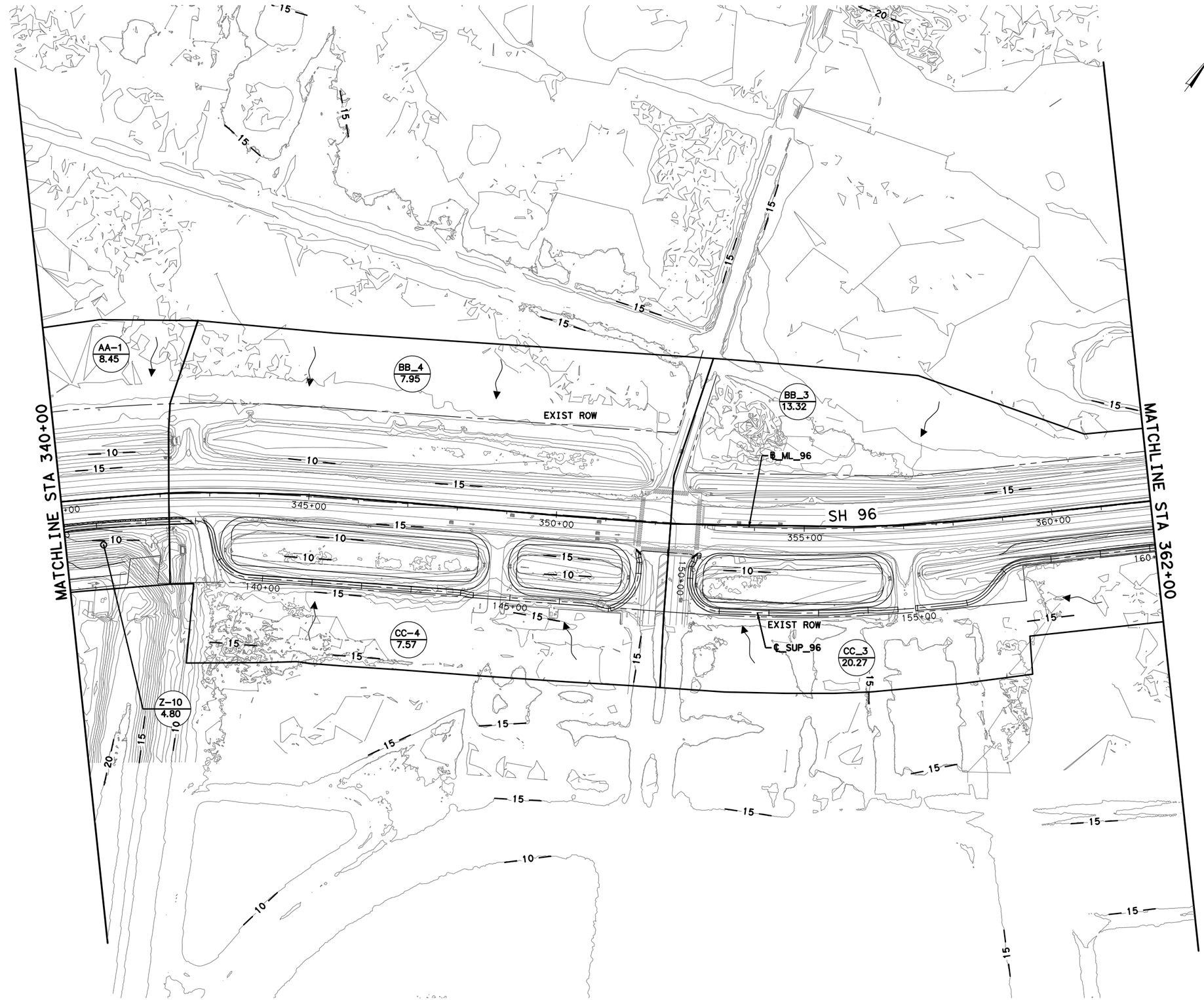

0′ 50′ 100′ 200′

LEGEND:

- DA-X / XX.XX — DRAINAGE AREA I.D. / DRAINAGE AREAS (AC)
- DRAINAGE AREA BOUNDARY
- EXISTING ROW
- DIRECTION OF FLOW
- — XX — CONTOUR ELEVATION

NO.	DATE	REVISION	APPROVED

STATE OF TEXAS
DAVID CORNYN
138892
LICENSED
PROFESSIONAL ENGINEER
8/2/2023

Texas Department of Transportation
©2023

JONES|CARTER
Texas Board of Professional Engineers Registration No. F-23290
4350 Lockhill Selma Rd, Suite 100• San Antonio, Texas 78249 • 210.494.5511

SH 96, FM 270
SH 96
DRAINAGE AREA MAPS
STA 340+00 TO STA 362+00

SHEET 11 OF 14

DRAWN	FED.RD. DIV.NO.	FEDERAL AID PROJECT NO.		HIGHWAY NO.
CH	06			FM 270, ETC
DESIGNED	STATE	DIST.	COUNTY	SHEET NO.
DC	TEXAS	HOUSTON	GALVESTON	193
CHECKED	CONT.	SECT.	JOB	
NG	0912	73	215	
APPROVED				
DD				

DATE:8/2/2023 12:55:13 AM USER:do
FILE:c:\bms\pwe101-01\daniel.ontiveros\dms22645\LCBF_DAM_11.dgn
PLOTDRIVER: LCBF.pltcfg
PENTABLE: LCBF.tbl

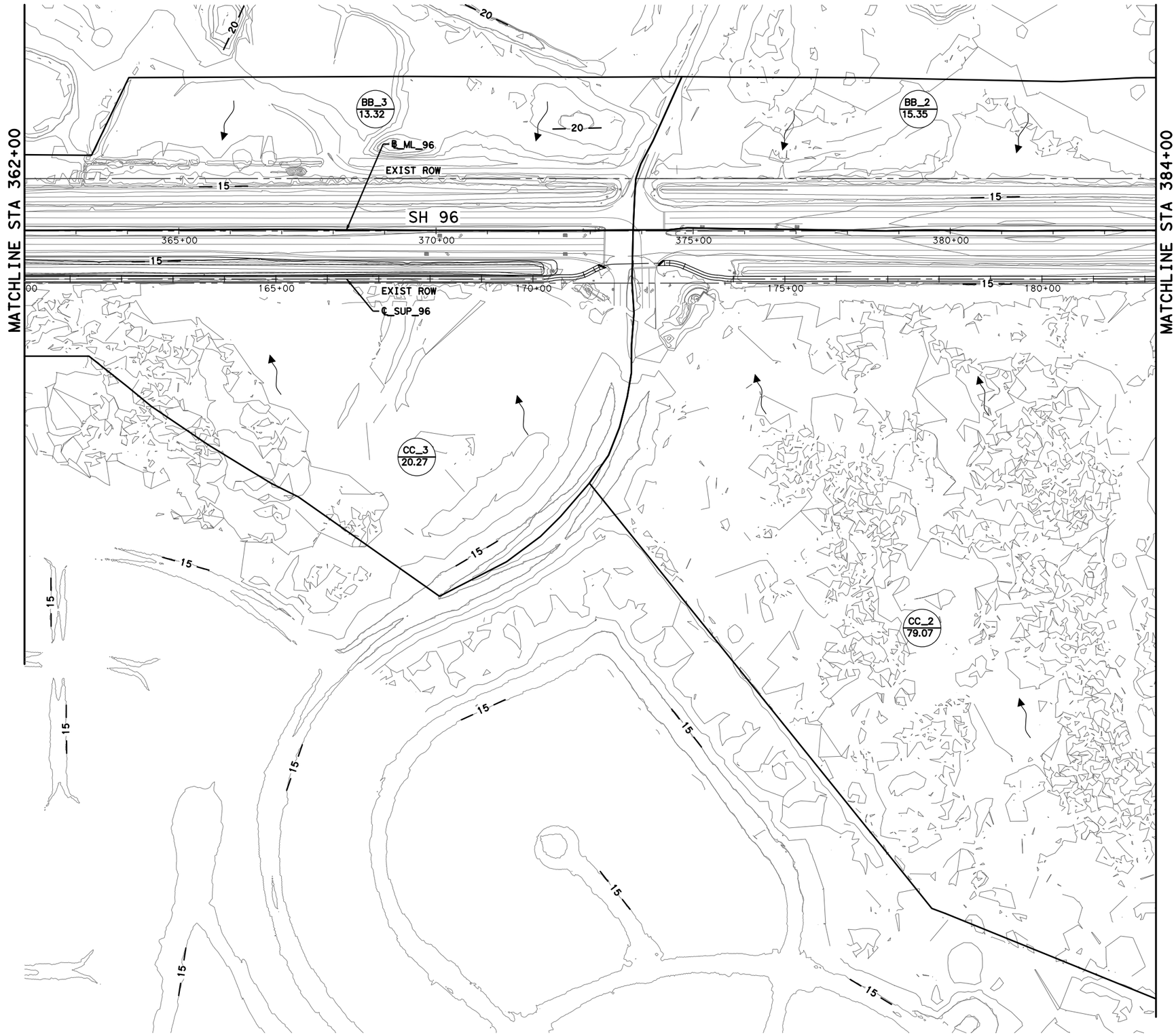

LEGEND:

- DA-X / XX.XX — DRAINAGE AREA I.D. / DRAINAGE AREAS (AC)
- DRAINAGE AREA BOUNDARY
- EXISTING ROW
- DIRECTION OF FLOW
- — XX — CONTOUR ELEVATION

NO.	DATE	REVISION	APPROVED

STATE OF TEXAS
DAVID CORNYN
138892
LICENSED
PROFESSIONAL ENGINEER
8/2/2023

Texas Department of Transportation
©2023

JONES|CARTER
Texas Board of Professional Engineers Registration No. F-23290
4350 Lockhill Selma Rd, Suite 100 • San Antonio, Texas 78249 • 210.494.5511

SH 96, FM 270
SH 96
DRAINAGE AREA MAPS
STA 362+00 TO STA 384+00

SHEET **12** OF **14**

DRAWN	FED.RD. DIV.NO.	FEDERAL AID PROJECT NO.		HIGHWAY NO.
CH	06			FM 270, ETC
DESIGNED	STATE	DIST.	COUNTY	SHEET NO.
DC	TEXAS	HOUSTON	GALVESTON	194
CHECKED	CONT.	SECT.	JOB	
NG	0912	73	215	
APPROVED				
DD				

DATE:8/2/2023 12:55:17 AM USER:do
FILE:c:\bms\pwe101-01\daniel.ontiveros\dms22645\LCBF_DAM_12.dgn
PLOTDRIVER: LCBF.pltcfg
PENTABLE: LCBF.tbl

LEGEND:

- DA-X / XX.XX — DRAINAGE AREA I.D. / DRAINAGE AREAS (AC)
- DRAINAGE AREA BOUNDARY
- EXISTING ROW
- DIRECTION OF FLOW
- — XX — CONTOUR ELEVATION

NO.	DATE	REVISION	APPROVED

STATE OF TEXAS
DAVID CORNYN
138892
LICENSED
PROFESSIONAL ENGINEER
8/2/2023

Texas Department of Transportation
©2023

JONES|CARTER
Texas Board of Professional Engineers Registration No. F-23290
4350 Lockhill Selma Rd, Suite 100• San Antonio, Texas 78249 •210.494.5511

SH 96, FM 270
SH 96
DRAINAGE AREA MAPS
STA 384+00 TO STA 406+00

SHEET 13 OF 14

DRAWN	FED.RD. DIV.NO.	FEDERAL AID PROJECT NO.		HIGHWAY NO.
CH	06			FM 270, ETC
DESIGNED	STATE	DIST.	COUNTY	SHEET NO.
DC	TEXAS	HOUSTON	GALVESTON	195
CHECKED	CONT.	SECT.	JOB	
NG	0912	73	215	
APPROVED				
DD				

DATE:8/2/2023 12:55:21 AM USER:do
FILE:c:\bms\pwe101-01\daniel.ontiveros\dms22645\LCBF_DAM_13.dgn
PLOTDRIVER: LCBF.pltcfg
PENTABLE: LCBF.tbl

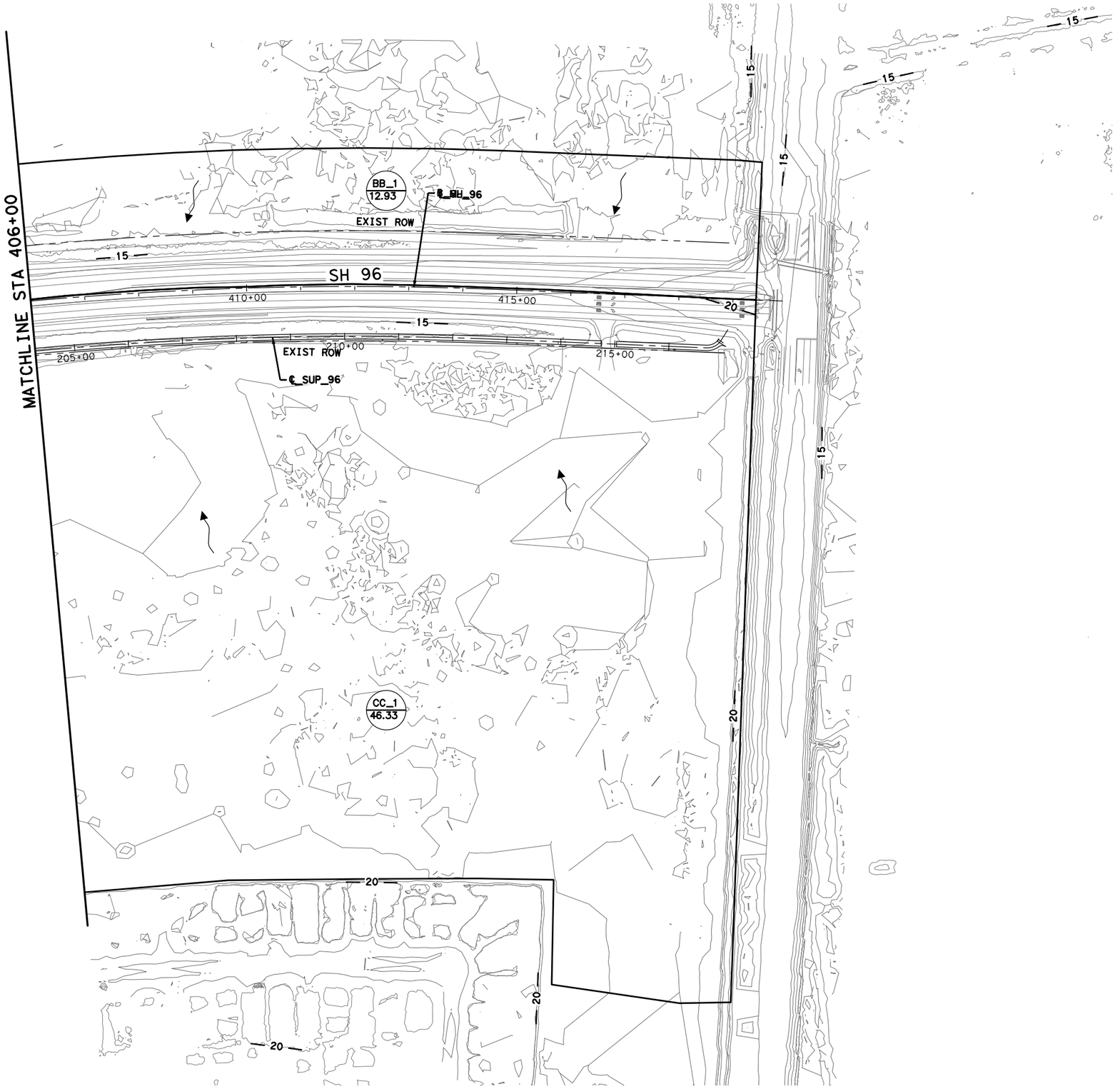

0′ 50′ 100′ 200′

LEGEND:

- DA-X / XX.XX — DRAINAGE AREA I.D. / DRAINAGE AREAS (AC)
- DRAINAGE AREA BOUNDARY
- EXISTING ROW
- DIRECTION OF FLOW
- — XX — CONTOUR ELEVATION

NO.	DATE	REVISION	APPROVED

STATE OF TEXAS
DAVID CORNYN
138892
LICENSED
PROFESSIONAL ENGINEER
8/2/2023

Texas Department of Transportation
©2023

JONES|CARTER
Texas Board of Professional Engineers Registration No. F-23290
4350 Lockhill Selma Rd, Suite 100 • San Antonio, Texas 78249 • 210.494.5511

SH 96, FM 270
SH 96
DRAINAGE AREA MAPS
STA 406+00 TO END

SHEET **14** OF **14**

DRAWN	FED.RD. DIV.NO.	FEDERAL AID PROJECT NO.		HIGHWAY NO.
CH	06			FM 270, ETC
DESIGNED	STATE	DIST.	COUNTY	SHEET NO.
DC	TEXAS	HOUSTON	GALVESTON	196
CHECKED	CONT.	SECT.	JOB	
NG	0912	73	215	
APPROVED				
DD				

PLOTDRIVER: LCBF.pltcfg PENTABLE: LCBF.tbl
DATE: 8/2/2023 12:55:25 AM USER: do
FILE: c:\bms\pwe101-01\daniel.ontiveros\dms22645\LCBF_DAM_14.dgn

DITCHES DRAINAGE AREAS EXISTING CONDITIONS

DA	C Value	Impervious %	Intensity						Area	Flow				
			TC	I_2-yr	I_5-yr	I_10-yr	I_100-yr	I_500-yr		2-yr	5-yr	10-yr	100-yr	500-yr
			(min)	(in/hr)	(in/hr)	(in/hr)	(in/hr)	(in/hr)	(ac)	(cfs)	(cfs)	(cfs)	(cfs)	(cfs)
A_1	0.65	85.13	10	5.73	7.19	8.41	12.83	16.20	0.75	2.80	3.51	4.11	6.26	7.90
A_2	0.65	85.18	10	5.73	7.19	8.41	12.83	16.20	1.20	4.45	5.58	6.53	9.96	12.57
A_3	0.65	85.01	10	5.73	7.19	8.41	12.83	16.20	2.05	7.63	9.57	11.20	17.09	21.56
A_4	0.65	85.04	11.11	5.52	6.93	8.12	12.43	15.76	3.17	11.40	14.31	16.77	25.66	32.54
A_5	0.65	85.09	14.44	4.99	6.28	7.37	11.38	14.61	4.15	13.53	17.03	20.01	30.88	39.65
A_6	0.65	85.10	13.78	5.08	6.39	7.51	11.57	14.82	1.83	6.06	7.62	8.95	13.79	17.66
A_7	0.70	86.03	15.38	4.86	6.12	7.19	11.12	14.32	6.26	21.24	26.75	31.44	48.63	62.63
B_1	0.74	86.72	10	5.73	7.19	8.41	12.83	16.20	1.24	5.26	6.60	7.72	11.78	14.87
B_2	0.70	86.04	10	5.73	7.19	8.41	12.83	16.20	0.60	2.43	3.05	3.57	5.44	6.86
B_3	0.75	87.17	10	5.73	7.19	8.41	12.83	16.20	1.23	5.32	6.67	7.81	11.92	15.04
B_4	0.65	85.47	10	5.73	7.19	8.41	12.83	16.20	0.49	1.80	2.25	2.64	4.03	5.08
B_5	0.75	87.38	10	5.73	7.19	8.41	12.83	16.20	1.19	5.13	6.43	7.53	11.49	14.50
B_6	0.65	85.46	10	5.73	7.19	8.41	12.83	16.20	0.48	1.79	2.25	2.63	4.01	5.06
B_7	0.75	87.24	10	5.73	7.19	8.41	12.83	16.20	1.20	5.14	6.44	7.54	11.51	14.52
B_8	0.65	85.02	10	5.73	7.19	8.41	12.83	16.20	0.48	1.79	2.25	2.63	4.01	5.06
B_9	0.75	87.06	10	5.73	7.19	8.41	12.83	16.20	1.19	5.13	6.43	7.53	11.49	14.50
B_10	0.65	85.00	10	5.73	7.19	8.41	12.83	16.20	0.49	1.81	2.28	2.66	4.06	5.13
B_11	0.74	86.94	10	5.73	7.19	8.41	12.83	16.20	1.07	4.56	5.72	6.69	10.21	12.88
B_12	0.76	87.00	10	5.73	7.19	8.41	12.83	16.20	0.99	4.36	5.46	6.40	9.76	12.32
B_13	0.76	87.00	10	5.73	7.19	8.41	12.83	16.20	0.53	2.29	2.88	3.37	5.14	6.48
C_1	0.45	36.29	10	5.73	7.19	8.41	12.83	16.20	2.59	6.67	8.37	9.80	14.95	18.87
D_2	0.45	36.29	14.66	4.95	6.24	7.33	11.31	14.54	4.13	9.21	11.59	13.62	21.03	27.02
E_1	0.65	72.39	22.5	4.07	5.15	6.08	9.53	12.50	4.82	12.76	16.15	19.05	29.89	39.21
E_4	0.45	36.29	20.61	4.25	5.37	6.33	9.90	12.93	8.14	15.57	19.68	23.20	36.27	47.38
F_1	0.45	36.29	14.80	4.93	6.21	7.30	11.28	14.49	2.67	5.93	7.47	8.77	13.55	17.42
G_1	0.45	36.29	13.26	5.16	6.49	7.62	11.72	14.99	2.86	6.63	8.34	9.79	15.07	19.27
G_2	0.45	36.29	12.14	5.34	6.71	7.87	12.08	15.38	2.84	6.84	8.59	10.07	15.46	19.69
H_1	0.45	36.29	10	5.73	7.19	8.41	12.83	16.20	2.36	6.08	7.63	8.94	13.63	17.20
I_2	0.45	36.29	10	5.73	7.19	8.41	12.83	16.20	0.22	0.56	0.70	0.82	1.25	1.58
L_1	0.45	36.29	14.50	4.98	6.27	7.36	11.36	14.59	2.01	4.50	5.66	6.65	10.27	13.19
M_1	0.45	36.29	16.97	4.65	5.86	6.90	10.71	13.86	3.19	6.69	8.43	9.92	15.40	19.92
N_1	0.45	36.29	21.42	4.17	5.27	6.22	9.74	12.74	3.55	6.66	8.42	9.93	15.54	20.34
O_1	0.45	36.29	16.30	4.74	5.97	7.02	10.88	14.05	3.11	6.62	8.34	9.81	15.21	19.64
Q_1	0.45	36.29	11.63	5.43	6.82	7.99	12.25	15.56	4.50	10.98	13.79	16.17	24.78	31.49
S_2	0.45	36.29	15.80	4.80	6.05	7.11	11.01	14.19	3.74	8.08	10.18	11.96	18.52	23.88
T_1	0.45	36.29	19.91	4.32	5.46	6.43	10.04	13.10	8.29	16.12	20.36	24.00	37.47	48.86
T_2	0.45	37.89	18.57	4.46	5.63	6.64	10.33	13.43	3.63	7.29	9.20	10.83	16.86	21.92
T_3	0.45	36.29	17.02	4.64	5.86	6.89	10.70	13.84	3.95	8.26	10.42	12.26	19.03	24.63
U_1	0.45	36.29	15.71	4.81	6.06	7.12	11.03	14.22	4.24	9.19	11.58	13.61	21.07	27.16
U_2	0.45	36.29	15.34	4.86	6.12	7.20	11.13	14.33	5.56	12.16	15.32	18.01	27.85	35.86
V_1	0.64	69.47	34.03	3.26	4.15	4.92	7.85	10.50	10.47	21.71	27.61	32.74	52.25	69.88
V_2	0.48	36.27	22.73	4.05	5.12	6.05	9.49	12.46	17.69	34.03	43.05	50.81	79.75	104.67
W_1	0.45	36.29	18.83	4.44	5.60	6.59	10.28	13.36	2.61	5.20	6.57	7.73	12.05	15.67
W_2	0.57	57.95	24.17	3.93	4.97	5.87	9.23	12.16	5.82	13.03	16.50	19.48	30.65	40.35
W_3	0.52	38.53	41.80	2.89	3.69	4.38	7.06	9.52	19.74	29.50	37.62	44.74	72.03	97.21
X_1	0.48	47.94	13.21	5.17	6.50	7.63	11.74	15.01	2.04	5.06	6.36	7.46	11.49	14.69
X_2	0.62	47.92	29.56	3.53	4.48	5.30	8.41	11.18	4.73	10.39	13.19	15.62	24.77	32.92
X_3	0.64	64.45	10.77	5.58	7.01	8.21	12.55	15.89	3.37	12.02	15.09	17.68	27.03	34.23
X_3A	0.70	85.56	22.62	4.06	5.14	6.06	9.51	12.48	8.17	23.17	29.31	34.59	54.27	71.22
X_4	0.53	53.37	10.00	5.73	7.19	8.41	12.83	16.20	1.03	3.14	3.94	4.62	7.04	8.89
X_5	0.58	59.75	10.00	5.73	7.19	8.41	12.83	16.20	4.66	15.49	19.43	22.75	34.71	43.81
X_6	0.60	63.36	40.10	2.96	3.78	4.49	7.21	9.72	25.01	44.46	56.67	67.35	108.24	145.82
Y_1	0.54	59.64	21.59	4.15	5.25	6.20	9.70	12.71	12.23	27.36	34.60	40.81	63.92	83.68
Y_2	0.65	80.05	15.12	4.89	6.16	7.24	11.19	14.40	11.47	36.54	46.02	54.08	83.61	107.58
Y_3	0.64	68.25	17.35	4.60	5.81	6.83	10.62	13.75	3.74	11.02	13.90	16.35	25.41	32.91
Y_4	0.67	78.77	16.01	4.77	6.01	7.07	10.95	14.13	6.84	21.79	27.46	32.28	50.01	64.52
Y_5	0.73	87.04	16.97	4.65	5.87	6.90	10.71	13.86	8.08	27.34	34.47	40.55	62.94	81.45
Y_6	0.61	62.09	14.14	5.03	6.33	7.43	11.46	14.70	9.77	29.80	37.50	44.04	67.92	87.12
Z_1	0.66	74.19	16.79	4.67	5.89	6.93	10.75	13.91	9.03	27.85	35.12	41.31	64.10	82.90
Z_2	0.47	40.26	39.56	2.99	3.81	4.52	7.27	9.78	13.44	18.95	24.15	28.69	46.09	62.05
Z_3	0.70	81.40	10.00	5.73	7.19	8.41	12.83	16.20	2.58	10.36	12.99	15.21	23.20	29.28
Z_4	0.72	85.40	10.00	5.73	7.19	8.41	12.83	16.20	2.84	11.73	14.72	17.23	26.29	33.18
Z_5	0.71	83.54	18.9638	4.42	5.58	6.57	10.25	13.33	6.84	21.52	27.16	31.99	49.87	64.88
Z_6	0.70	81.36	15.8971	4.79	6.03	7.09	10.98	14.16	5.08	17.00	21.42	25.19	39.00	50.31
Z_7	0.71	83.34	10	5.73	7.19	8.41	12.83	16.20	1.12	4.56	5.72	6.70	10.22	12.89
Z_8	0.90	90.00	10	5.73	7.19	8.41	12.83	16.20	0.72	3.70	4.64	5.43	8.29	10.46
Z_9	0.70	70.78	10	5.73	7.19	8.41	12.83	16.20	2.29	9.17	11.50	13.46	20.54	25.92
Z_10	0.46	38.09	10.00	5.73	7.19	8.41	12.83	16.20	4.80	12.64	15.86	18.57	28.33	35.75
AA_1	0.54	52.43	10.00	5.73	7.19	8.41	12.83	16.20	8.45	26.12	32.76	38.36	58.52	73.85
BB_1	0.67	76.00	47.77	2.66	3.40	4.06	6.57	8.91	12.93	23.08	29.50	35.14	56.91	77.24
BB_2	0.67	76.00	39.42	2.99	3.81	4.53	7.28	9.80	15.35	30.78	39.23	46.61	74.85	100.76
BB_3	0.63	64.75	21.52	4.16	5.26	6.21	9.72	12.72	13.32	35.05	44.31	52.27	81.86	107.15
BB_4	0.49	49.35	14.84	4.93	6.21	7.29	11.26	14.48	7.95	19.29	24.29	28.54	44.08	56.68
CC_1	0.43	21.98	79.25	1.92	2.47	2.96	4.91	6.79	46.33	38.13	49.12	58.93	97.70	135.12
CC_2	0.36	17.09	60.69	2.29	2.93	3.51	5.74	7.87	79.07	65.72	84.30	100.76	164.97	226.00
CC_3	0.56	52.14	31.32	3.42	4.34	5.14	8.18	10.90	20.27	38.71	49.18	58.27	92.65	123.45
CC_4	0.53	44.25	13.45	5.13	6.45	7.58	11.67	14.93	7.57	20.78	26.14	30.68	47.24	60.45

NOTE:
ALL DRAINAGE CALCULATIONS ARE TAKEN FROM THE DRAINAGE STUDY PLAN FOR LEAGUE CITY BIKE FACILITIES (DATED AUGUST 2022).

NO.	DATE	REVISION	APPROVED

STATE OF TEXAS
DAVID CORNYN
138892
LICENSED
PROFESSIONAL ENGINEER
8/2/2023

Texas Department of Transportation
©2023

JONES|CARTER
Texas Board of Professional Engineers Registration No. F-23290
4350 Lockhill Selma Rd, Suite 100 • San Antonio, Texas 78249 • 210.494.5511

FM 270 / SH 96
DRAINAGE AREA
CALCULATION SHEETS

SHEET **01** OF **03**

DRAWN	FED.RD. DIV.NO.	FEDERAL AID PROJECT NO.		HIGHWAY NO.
CH	06			FM 270, ETC
DESIGNED	STATE	DIST.	COUNTY	SHEET NO.
DC	TEXAS	HOUSTON	GALVESTON	197
CHECKED	CONT.	SECT.	JOB	
NG	0912	73	215	
APPROVED				
DD				

PENTABLE:LCBF.tbl
PLOTDRIVER:LCBF.pltcfg
DATE:8/2/2023 12:24:51 AM USER:sss
FILE:c:\bms\pwe101-01\stela.staver-scull\dms22645\LCBF_EDAR_01.dgn

DITCHES DRAINAGE AREAS PROPOSED CONDITIONS

DA	C Value	Impervious %	Intensity						Area	Flow				
			TC	I_2-yr	I_5-yr	I_10-yr	I_100-yr	I_500-yr		2-yr	5-yr	10-yr	100-yr	500-yr
			(min)	(in/hr)	(in/hr)	(in/hr)	(in/hr)	(in/hr)	(ac)	(cfs)	(cfs)	(cfs)	(cfs)	(cfs)
A_1	0.65	85.13	10	5.73	7.19	8.41	12.83	16.20	0.75	2.80	3.51	4.11	6.26	7.90
A_2	0.65	85.18	10	5.73	7.19	8.41	12.83	16.20	1.20	4.45	5.58	6.53	9.96	12.57
A_3	0.65	85.01	10	5.73	7.19	8.41	12.83	16.20	2.05	7.63	9.57	11.20	17.09	21.56
A_4	0.65	85.04	11.11	5.52	6.93	8.12	12.43	15.76	3.17	11.40	14.31	16.77	25.66	32.54
A_5	0.65	85.09	14.44	4.99	6.28	7.37	11.38	14.61	4.15	13.53	17.03	20.01	30.88	39.65
A_6	0.65	85.10	13.78	5.08	6.39	7.51	11.57	14.82	1.83	6.06	7.62	8.95	13.79	17.66
A_7	0.70	86.03	15.38	4.86	6.12	7.19	11.12	14.32	6.26	21.24	26.75	31.44	48.63	62.63
B_1	0.74	86.72	10	5.73	7.19	8.41	12.83	16.20	1.24	5.26	6.60	7.72	11.78	14.87
B_2	0.70	86.04	10	5.73	7.19	8.41	12.83	16.20	0.60	2.43	3.05	3.57	5.44	6.86
B_3	0.75	87.17	10	5.73	7.19	8.41	12.83	16.20	1.23	5.32	6.67	7.81	11.92	15.04
B_4	0.65	85.47	10	5.73	7.19	8.41	12.83	16.20	0.49	1.80	2.25	2.64	4.03	5.08
B_5	0.75	87.38	10	5.73	7.19	8.41	12.83	16.20	1.19	5.13	6.43	7.53	11.49	14.50
B_6	0.65	85.46	10	5.73	7.19	8.41	12.83	16.20	0.48	1.79	2.25	2.63	4.01	5.06
B_7	0.75	87.24	10	5.73	7.19	8.41	12.83	16.20	1.20	5.14	6.44	7.54	11.51	14.52
B_8	0.65	85.02	10	5.73	7.19	8.41	12.83	16.20	0.48	1.79	2.25	2.63	4.01	5.06
B_9	0.75	87.06	10	5.73	7.19	8.41	12.83	16.20	1.19	5.13	6.43	7.53	11.49	14.50
B_10	0.65	85.00	10	5.73	7.19	8.41	12.83	16.20	0.49	1.81	2.28	2.66	4.06	5.13
B_11	0.74	86.94	10	5.73	7.19	8.41	12.83	16.20	1.07	4.56	5.72	6.69	10.21	12.88
B_12	0.76	87.00	10.00	5.73	7.19	8.41	12.83	16.20	0.99	4.36	5.46	6.40	9.76	12.32
B_13	0.76	87.00	10.00	5.73	7.19	8.41	12.83	16.20	0.53	2.29	2.88	3.37	5.14	6.48
C_1	0.45	36.29	10.00	5.73	7.19	8.41	12.83	16.20	2.59	6.67	8.37	9.80	14.95	18.87
D_2	0.46	37.60	14.66	4.95	6.24	7.33	11.31	14.54	4.13	9.36	11.78	13.84	21.37	27.46
E_1	0.65	72.39	22.50	4.07	5.15	6.08	9.53	12.50	4.82	12.76	16.15	19.05	29.89	39.21
E_4	0.46	37.19	20.61	4.25	5.37	6.33	9.90	12.93	8.14	15.75	19.90	23.46	36.68	47.91
F_1	0.48	42.34	14.80	4.93	6.21	7.30	11.28	14.49	2.67	6.37	8.02	9.43	14.56	18.72
G_1	0.46	37.19	13.26	5.16	6.49	7.62	11.72	14.99	2.86	6.71	8.43	9.90	15.23	19.48
G_2	0.47	40.55	12.14	5.34	6.71	7.87	12.08	15.38	2.84	7.20	9.04	10.60	16.27	20.72
H_1	0.46	37.20	10.00	5.73	7.19	8.41	12.83	16.20	2.36	6.15	7.72	9.04	13.79	17.40
I_2	0.46	37.19	10.00	5.73	7.19	8.41	12.83	16.20	0.22	0.56	0.71	0.83	1.27	1.60
L_1	0.46	37.19	14.50	4.98	6.27	7.36	11.36	14.59	2.01	4.55	5.73	6.73	10.38	13.33
M_1	0.46	37.19	16.97	4.65	5.86	6.90	10.71	13.86	3.19	6.76	8.53	10.03	15.57	20.15
N_1	0.47	39.31	21.42	4.17	5.27	6.22	9.74	12.74	3.55	6.90	8.73	10.29	16.12	21.10
O_1	0.46	38.25	16.30	4.74	5.97	7.02	10.88	14.05	3.11	6.78	8.55	10.05	15.58	20.12
Q_1	0.46	37.19	11.63	5.43	6.82	7.99	12.25	15.56	4.50	11.10	13.94	16.35	25.05	31.84
S_2	0.46	37.19	15.80	4.80	6.05	7.11	11.01	14.19	3.74	8.17	10.29	12.10	18.73	24.15
T_1	0.46	37.19	19.91	4.32	5.46	6.43	10.04	13.10	8.29	16.30	20.59	24.26	37.89	49.41
T_2	0.45	37.89	18.57	4.46	5.63	6.64	10.33	13.43	3.63	7.29	9.20	10.83	16.86	21.92
T_3	0.45	36.29	17.02	4.64	5.86	6.89	10.70	13.84	3.95	8.26	10.42	12.26	19.03	24.63
U_1	0.46	37.35	15.71	4.81	6.06	7.12	11.03	14.22	4.24	9.31	11.73	13.79	21.34	27.51
U_2	0.45	36.29	15.34	4.86	6.12	7.20	11.13	14.33	5.56	12.16	15.32	18.01	27.85	35.86
V_1	0.64	69.47	34.03	3.26	4.15	4.92	7.85	10.50	10.47	21.71	27.61	32.74	52.25	69.88
V_2	0.49	36.76	22.73	4.05	5.12	6.05	9.49	12.46	17.69	34.76	43.97	51.90	81.45	106.91
W_1	0.47	39.58	18.83	4.44	5.60	6.59	10.28	13.36	2.61	5.41	6.83	8.05	12.54	16.31
W_2	0.57	57.95	24.17	3.93	4.97	5.87	9.23	12.16	5.82	13.03	16.50	19.48	30.65	40.35
W_3	0.52	38.53	41.80	2.89	3.69	4.38	7.06	9.52	19.74	29.50	37.62	44.74	72.03	97.21
X_1	0.48	47.94	13.21	5.17	6.50	7.63	11.74	15.01	2.04	5.06	6.36	7.46	11.49	14.69
X_2	0.62	47.92	29.56	3.53	4.48	5.30	8.41	11.18	4.73	10.39	13.19	15.62	24.77	32.92
X_3	0.64	64.45	10.77	5.58	7.01	8.21	12.55	15.89	3.37	12.02	15.09	17.68	27.03	34.23
X_3A	0.70	85.56	22.62	4.06	5.14	6.06	9.51	12.48	8.17	23.17	29.31	34.59	54.27	71.22
X_4	0.53	53.37	10.00	5.73	7.19	8.41	12.83	16.20	1.03	3.14	3.94	4.62	7.04	8.89
X_5	0.58	59.75	10.00	5.73	7.19	8.41	12.83	16.20	4.66	15.49	19.43	22.75	34.71	43.81
X_6	0.60	63.36	40.10	2.96	3.78	4.49	7.21	9.72	25.01	44.46	56.67	67.35	108.24	145.82
Y_1	0.54	59.64	21.59	4.15	5.25	6.20	9.70	12.71	12.23	27.36	34.60	40.81	63.92	83.68
Y_2	0.65	80.05	15.12	4.89	6.16	7.24	11.19	14.40	11.47	36.54	46.02	54.08	83.61	107.58
Y_3	0.64	68.25	17.35	4.60	5.81	6.83	10.62	13.75	3.74	11.02	13.90	16.35	25.41	32.91
Y_4	0.67	78.77	16.01	4.77	6.01	7.07	10.95	14.13	6.84	21.79	27.46	32.28	50.01	64.52
Y_5	0.73	87.04	16.97	4.65	5.87	6.90	10.71	13.86	8.08	27.34	34.47	40.55	62.94	81.45
Y_6	0.61	62.09	14.14	5.03	6.33	7.43	11.46	14.70	9.77	29.80	37.50	44.04	67.92	87.12
Z_1	0.66	74.19	16.79	4.67	5.89	6.93	10.75	13.91	9.03	27.85	35.12	41.31	64.10	82.90
Z_2	0.47	40.26	39.56	2.99	3.81	4.52	7.27	9.78	13.44	18.95	24.15	28.69	46.09	62.05
Z_3	0.70	81.40	10.00	5.73	7.19	8.41	12.83	16.20	2.58	10.36	12.99	15.21	23.20	29.28
Z_4	0.72	85.40	10.00	5.73	7.19	8.41	12.83	16.20	2.84	11.73	14.72	17.23	26.29	33.18
Z_5	0.71	83.54	18.9638	4.42	5.58	6.57	10.25	13.33	6.84	21.52	27.16	31.99	49.87	64.88
Z_6	0.70	81.36	15.8971	4.79	6.03	7.09	10.98	14.16	5.08	17.00	21.42	25.19	39.00	50.31
Z_7	0.71	83.34	10	5.73	7.19	8.41	12.83	16.20	1.12	4.56	5.72	6.70	10.22	12.89
Z_8	0.90	90.00	10	5.73	7.19	8.41	12.83	16.20	0.72	3.70	4.64	5.43	8.29	10.46
Z_9	0.70	70.78	10	5.73	7.19	8.41	12.83	16.20	2.29	9.17	11.50	13.46	20.54	25.92
Z_10	0.46	38.09	10.00	5.73	7.19	8.41	12.83	16.20	4.80	12.64	15.86	18.57	28.33	35.75
AA_1	0.54	52.43	10.00	5.73	7.19	8.41	12.83	16.20	8.45	26.12	32.76	38.36	58.52	73.85
BB_1	0.67	76.00	47.77	2.66	3.40	4.06	6.57	8.91	12.93	23.08	29.50	35.14	56.91	77.24
BB_2	0.67	76.00	39.42	2.99	3.81	4.53	7.28	9.80	15.35	30.78	39.23	46.61	74.85	100.76
BB_3	0.63	64.75	21.52	4.16	5.26	6.21	9.72	12.72	13.32	35.05	44.31	52.27	81.86	107.15
BB_4	0.49	49.35	14.84	4.93	6.21	7.29	11.26	14.48	7.95	19.29	24.29	28.54	44.08	56.68
CC_1	0.43	21.98	79.25	1.92	2.47	2.96	4.91	6.79	46.33	38.13	49.12	58.93	97.70	135.12
CC_2	0.36	17.09	60.69	2.29	2.93	3.51	5.74	7.87	79.07	65.72	84.30	100.76	164.97	226.00
CC_3	0.56	52.14	31.32	3.42	4.34	5.14	8.18	10.90	20.27	38.71	49.18	58.27	92.65	123.45
CC_4	0.53	44.25	13.45	5.13	6.45	7.58	11.67	14.93	7.57	20.78	26.14	30.68	47.24	60.45

NOTE:
ALL DRAINAGE CALCULATIONS ARE TAKEN FROM THE DRAINAGE STUDY PLAN FOR LEAGUE CITY BIKE FACILITIES (DATED AUGUST 2022).

NO.	DATE	REVISION	APPROVED

STATE OF TEXAS
DAVID CORNYN
138892
LICENSED
PROFESSIONAL ENGINEER
8/2/2023

Texas Department of Transportation
©2023

JONES|CARTER
Texas Board of Professional Engineers Registration No. F-23290
4350 Lockhill Selma Rd, Suite 100 • San Antonio, Texas 78249 • 210.494.5511

FM 270 / SH 96
DRAINAGE AREA
CALCULATION SHEETS

SHEET **02** OF **03**

DRAWN	FED.RD. DIV.NO.	FEDERAL AID PROJECT NO.		HIGHWAY NO.
CH	06			FM 270, ETC
DESIGNED	STATE	DIST.	COUNTY	SHEET NO.
DC	TEXAS	HOUSTON	GALVESTON	198
CHECKED	CONT.	SECT.	JOB	
NG	0912	73	215	
APPROVED				
DD				

DATE:8/2/2023 12:24:53 AM USER:sss
FILE:c:\bms\pwe101-01\stela.staver-scull\dms22645\LCBF_EDAR_02.dgn
PLOTDRIVER:LCBF.pltcfg PENTABLE:LCBF.tbl

EXISTING CONDITIONS - CROSS CULVERT DRAINAGE AREAS

DA	C Value	Intensity						Area	Flow				
		TC	I_2-yr	I_5-yr	I_10-yr	I_100-yr	I_500-yr		2-yr	5-yr	10-yr	100-yr	500-yr
		(min)	(in/hr)	(in/hr)	(in/hr)	(in/hr)	(in/hr)	(ac)	(cfs)	(cfs)	(cfs)	(cfs)	(cfs)
Cross_1A	0.48	160.63	1.16	1.51	1.84	3.15	4.45	348.30	195.25	254.46	308.61	529.29	747.23
Cross_1B	0.51	83.36	1.85	2.39	2.86	4.76	6.59	135.20	127.97	164.96	198.08	329.17	456.00
Cross_2	0.41	50.04	2.59	3.31	3.94	6.40	8.70	49.51	52.33	66.93	79.78	129.48	176.05
Cross_3	0.53	38.78	3.02	3.85	4.57	7.34	9.88	54.47	86.76	110.55	131.33	210.75	283.51
Cross_4A	0.40	34.83	3.22	4.09	4.86	7.76	10.38	26.30	33.83	43.04	51.06	81.56	109.21
Cross_4B	0.60	49.55	2.60	3.33	3.97	6.44	8.75	33.43	52.00	66.49	79.25	128.56	174.74

	EXISTING CALIBRATED XP FLOWS					PROPOSED CALIBRATED XP FLOWS					FLOW DIFFERENCE				
	2-yr	5-yr	10-yr	100-yr	500-yr	2-yr	5-yr	10-yr	100-yr	500-yr	2-yr	5-yr	10-yr	100-yr	500-yr
T_1	16.12	20.36	24.00	37.47	48.87	16.30	20.58	24.26	37.90	49.39	0.18	0.22	0.26	0.43	0.52
T_2	7.28	9.19	10.83	17.01	21.92	7.28	9.19	10.83	17.01	21.92	0	0	0	0	0
T_3	8.26	10.42	12.25	19.02	24.63	8.26	10.42	12.25	19.02	24.63	0	0	0	0	0
U_1	9.19	11.57	13.61	21.06	27.16	9.31	11.73	13.79	21.34	27.51	0.12	0.16	0.18	0.28	0.35
U_2	12.16	15.32	18.00	27.82	35.87	12.16	15.32	18.00	27.82	35.87	0	0	0	0	0
V_1	21.71	27.60	32.73	52.28	69.88	21.71	27.60	32.73	52.28	69.88	0	0	0	0	0
V_2	34.03	43.05	50.81	79.75	104.67	34.76	43.98	51.90	81.45	106.91	0.73	0.93	1.09	1.70	2.24
W_1	5.20	6.56	7.73	12.05	15.67	5.41	6.83	8.05	12.54	16.31	0.21	0.27	0.32	0.49	0.64
W_2	13.03	16.49	19.48	30.76	40.32	13.03	16.49	19.48	30.76	40.32	0	0	0	0	0
W_3	29.50	37.62	44.82	72.04	97.23	29.50	37.62	44.82	72.04	97.23	0	0	0	0	0
X_1	5.06	6.36	7.46	11.56	14.69	5.06	6.36	7.46	11.56	14.69	0	0	0	0	0
X_2	10.39	13.19	15.61	24.82	32.92	10.39	13.19	15.61	24.82	32.92	0	0	0	0	0
X_3	12.01	15.07	17.67	27.03	34.24	12.01	15.07	17.67	27.03	34.24	0	0	0	0	0
X_3A	23.16	29.27	34.56	54.18	71.22	23.16	29.27	34.56	54.18	71.22	0	0	0	0	0
X_4	3.14	3.94	4.61	7.05	8.89	3.14	3.94	4.61	7.05	8.89	0	0	0	0	0
X_5	15.48	19.41	22.74	34.59	43.83	15.48	19.41	22.74	34.59	43.83	0	0	0	0	0
X_6	44.44	56.67	67.34	108.29	145.84	44.44	56.67	67.34	108.29	145.84	0	0	0	0	0
Y_1	27.36	34.58	40.80	64.17	83.69	27.36	34.58	40.80	64.17	83.69	0	0	0	0	0
Y_2	36.53	45.95	54.03	83.41	107.58	36.53	45.95	54.03	83.41	107.58	0	0	0	0	0
Y_3	11.02	13.90	16.34	25.30	32.91	11.02	13.90	16.34	25.30	32.91	0	0	0	0	0
Y_4	21.78	27.42	32.25	49.96	64.53	21.78	27.42	32.25	49.96	64.53	0	0	0	0	0
Y_5	27.33	34.40	40.51	62.94	81.45	27.33	34.40	40.51	62.94	81.45	0	0	0	0	0
Y_6	29.79	37.46	44.02	67.62	87.12	29.79	37.46	44.02	67.62	87.12	0	0	0	0	0
Z_1	27.84	35.09	41.27	63.99	82.90	27.84	35.09	41.27	63.99	82.90	0	0	0	0	0
Z_2	18.94	24.18	28.69	46.07	62.06	18.94	24.18	28.69	46.07	62.06	0	0	0	0	0
Z_3	10.34	12.95	15.19	23.13	29.28	10.34	12.95	15.19	23.13	29.28	0	0	0	0	0
Z_4	11.72	14.67	17.23	26.20	33.18	11.72	14.67	17.23	26.20	33.18	0	0	0	0	0
Z_5	21.51	27.14	31.96	49.86	64.88	21.51	27.14	31.96	49.86	64.88	0	0	0	0	0
Z_6	17.00	21.39	25.18	39.00	50.31	17.00	21.39	25.18	39.00	50.31	0	0	0	0	0
Z_7	4.55	5.70	6.69	10.19	12.89	4.55	5.70	6.69	10.19	12.89	0	0	0	0	0
Z_8	3.70	4.64	5.42	8.29	10.46	3.70	4.64	5.42	8.29	10.46	0	0	0	0	0
Z_9	9.16	11.47	13.44	20.54	25.92	9.16	11.47	13.44	20.54	25.92	0	0	0	0	0
Z_10	12.64	15.84	18.56	28.30	35.75	12.64	15.84	18.56	28.30	35.75	0	0	0	0	0
AA_1	26.11	32.69	38.34	58.59	73.86	26.11	32.69	38.34	58.59	73.86	0	0	0	0	0
BB_1	23.07	29.49	35.13	56.91	77.24	23.07	29.49	35.13	56.91	77.24	0	0	0	0	0
BB_2	30.78	39.22	46.59	74.51	100.76	30.78	39.22	46.59	74.51	100.76	0	0	0	0	0
BB_3	35.05	44.26	52.21	81.90	107.15	35.05	44.26	52.21	81.90	107.15	0	0	0	0	0
BB_4	19.29	24.27	28.52	44.39	56.68	19.29	24.27	28.52	44.39	56.68	0	0	0	0	0
CC_1	38.13	49.21	58.93	97.22	135.84	38.13	49.21	58.93	97.22	135.84	0	0	0	0	0
CC_2	65.71	84.36	100.80	163.71	228.71	65.71	84.36	100.80	163.71	228.71	0	0	0	0	0
CC_3	38.71	49.18	58.25	92.71	123.45	38.71	49.18	58.25	92.71	123.45	0	0	0	0	0
CC_4	20.77	26.11	30.68	47.37	60.45	20.77	26.11	30.68	47.37	60.45	0	0	0	0	0
Cross_1A	195.04	254.58	308.61	518.21	750.207	195.04	254.58	308.61	518.21	750.207	0	0	0	0	0
Cross_1B	127.85	165.06	198.07	327.18	456.397	127.85	165.06	198.07	327.18	456.397	0	0	0	0	0
Cross_2	52.32	66.95	79.78	127.66	175.614	52.32	66.95	79.78	127.66	175.614	0	0	0	0	0
Cross_3	86.74	110.59	131.35	211.87	284.609	86.74	110.59	131.35	211.87	284.609	0	0	0	0	0
Cross_4A	33.83	43.05	51.06	81.82	109.637	33.83	43.05	51.06	81.82	109.637	0	0	0	0	0
Cross_4B	51.99	66.49	79.26	131.42	174.205	51.99	66.49	79.26	131.42	174.205	0	0	0	0	0

NOTE:
ALL DRAINAGE CALCULATIONS ARE TAKEN FROM THE DRAINAGE STUDY PLAN FOR LEAGUE CITY BIKE FACILITIES (DATED AUGUST 2022).

NO.	DATE	REVISION	APPROVED

STATE OF TEXAS
DAVID CORNYN
138892
LICENSED
PROFESSIONAL ENGINEER
8/2/2023

Texas Department of Transportation
©2023

JONES|CARTER
Texas Board of Professional Engineers Registration No. F-23290
4350 Lockhill Selma Rd, Suite 100 • San Antonio, Texas 78249 • 210.494.5511

FM 270 / SH 96
DRAINAGE AREA
CALCULATION SHEETS

SHEET **03** OF **03**

DRAWN	FED.RD. DIV.NO.	FEDERAL AID PROJECT NO.		HIGHWAY NO.
CH	06			FM 270, ETC
DESIGNED	STATE	DIST.	COUNTY	SHEET NO.
DC	TEXAS	HOUSTON	GALVESTON	199
CHECKED	CONT.	SECT.	JOB	
NG	0912	73	215	
APPROVED				
DD				

PLOTDRIVER: LCBF.pltcfg PENTABLE: LCBF.tbl
DATE: 8/2/2023 12:24:54 AM USER: sss
FILE: c:\bms\pwe101-01\stella.staver-scull\dms22645\LCBF_EDAR_03.dgn

PROPOSED CONDITIONS									DITCH MODEL					WATERSHED MODEL				
Link Name	Conduit Name	Conduit Type	Upstream Node	Downstream Node	Upstream Station	Upstream Offset	Downstream Station	Downstream Offset	2-Year Peak Flow (cfs)	5-Year Peak Flow (cfs)	10-Year Peak Flow (cfs)	100-Year Peak Flow (cfs)	500-Year Peak Flow (cfs)	2-Year Peak Flow (cfs)	5-Year Peak Flow (cfs)	10-Year Peak Flow (cfs)	100-Year Peak Flow (cfs)	500-Year Peak Flow (cfs)
1066	905.1	Pipe	3133	3134	218+11.17	108.61L	216+94.27	109.02L	25.15	33.06	40.35	49.91	40.49	25.15	33.06	40.34	49.85	40.58
2099	2099	Natural Section	3134	3135	216+94.27	109.02L	213+05.55	104.20L	31.34	41.39	50.65	71.40	99.24	31.34	41.39	50.61	71.39	99.30
2098	521.1	Natural Section	3131	3134	232+15.98	55.78R	216+94.27	109.02L	0.00	0.00	0.00	0.00	8.27	0.00	0.00	0.00	0.00	8.28
2098	2098 Pipe	Pipe	3131	3134	232+15.98	55.78R	216+94.27	109.02L	17.41	22.70	27.09	42.89	52.80	17.41	22.70	27.09	42.89	52.80
1065	958.1	Pipe	3130	3131	231+67.50	56.94R	232+15.98	55.78R	5.31	7.35	9.11	14.87	16.26	5.31	7.35	9.11	14.87	16.26
1064	959.1	Pipe	3129	3128	227+83.04	40.35L	227+53.26	41.17L	-4.66	-5.31	-5.85	-8.76	-8.53	-4.66	-5.31	-5.85	-8.76	-8.53
2097	560.1	Natural Section	3129	3129.4	227+83.04	40.35L	230+85.46	41.29L	1.67	3.48	6.19	18.32	31.78	1.67	3.48	6.19	18.32	31.78
2097	2097 Pipe	Pipe	3129	3129.4	227+83.04	40.35L	230+85.46	41.29L	16.83	18.78	19.86	20.21	19.81	16.83	18.78	19.86	20.21	19.81
2094	2094	Natural Section	3128	3128.1	227+53.26	41.17L	225+89.33	40.43L	6.43	9.55	12.93	23.63	30.29	6.43	9.55	12.93	23.63	30.29
1063	960.1	Pipe	3124	3123	223+09.87	41.79L	222+60.71	41.92L	4.80	7.59	10.52	18.07	19.52	4.80	7.59	10.52	18.07	19.52
2093	2093	Natural Section	3123	3119	222+60.71	41.92L	218+83.08	44.07L	3.50	6.11	8.77	15.30	16.08	3.50	6.11	8.77	15.30	16.08
1062	961.1	Pipe	3126	3125	223+21.09	53.21R	222+50.84	53.51R	-2.79	-3.54	-4.40	-7.08	-8.59	-2.79	-3.54	-4.40	-7.08	-8.58
2092	523.1	Natural Section	3125	3125.2	222+50.84	53.51R	219+73.95	51.44R	0.34	0.71	1.26	4.27	8.92	0.34	0.71	1.26	4.27	8.92
2092	2092 Pipe.1	Pipe	3125	3125.2	222+50.84	53.51R	219+73.95	51.44R	5.90	7.22	8.20	10.47	11.81	5.90	7.22	8.20	10.47	11.81
1059	962.1	Pipe	3117	3116	216+99.20	45.22L	216+66.69	44.73L	16.13	21.25	24.89	32.17	38.92	16.13	21.25	24.89	32.17	38.92
2080	2080	Natural Section	3116	3113	216+66.69	44.73L	207+94.18	46.25L	22.14	28.91	33.70	45.35	54.44	22.14	28.91	33.70	45.35	54.44
1058	963.1	Pipe	3115	3114	216+43.90	54.75R	216+20.21	55.52R	5.94	7.18	7.88	11.39	11.13	5.94	7.18	7.88	11.39	11.13
2078	2078	Natural Section	3114	3112	216+20.21	55.52R	207+64.75	52.02R	15.99	19.94	22.95	37.29	47.40	15.99	19.94	22.95	37.29	47.39
1057	1010.1	Pipe	3113	3109	207+94.18	46.25L	207+23.50	45.96L	21.74	28.42	33.19	41.05	35.38	21.74	28.42	33.19	41.05	35.38
1056	965.1	Pipe	3112	3110	207+64.75	52.02R	206+95.11	51.78R	15.19	18.49	21.04	25.22	20.78	15.19	18.49	21.04	25.22	20.78
2103	2103	Natural Section	3145	3144	216+87.74	95.19R	212+75.68	83.61R	34.11	44.09	50.61	65.27	70.68	34.11	44.09	50.61	65.27	70.68
1072	955.1	Pipe	3146	3145	218+22.08	102.26R	216+87.74	95.19R	28.40	36.26	41.16	49.58	42.63	28.40	36.26	41.16	49.58	42.63
2108	2108	Natural Section	3153	3146	222+78.24	99.76R	218+22.08	102.26R	27.09	34.80	40.02	50.78	51.42	27.09	34.80	40.02	50.78	51.41
1075	954.1	Pipe	3155	3153	223+50.95	100.16R	222+78.24	99.76R	27.99	36.06	41.80	54.82	58.95	27.99	36.06	41.80	54.82	58.95
2111	2111	Natural Section	3157	3155	227+26.29	90.15R	223+50.95	100.16R	29.48	38.06	44.52	61.21	70.94	29.48	38.06	44.52	61.21	70.93
1076	953.1	Pipe	3158	3157	227+80.13	86.03R	227+26.29	90.15R	12.85	17.08	20.10	27.46	24.06	12.85	17.08	20.10	27.46	24.06
2112	2112	Natural Section	3165	3158	237+62.51	75.59R	227+80.13	86.03R	12.19	16.31	19.31	29.17	34.91	12.19	16.31	19.31	29.17	34.91
1078	951.1	Pipe	3166	3165	238+15.68	75.11R	237+62.51	75.59R	12.33	16.44	19.47	29.32	36.12	12.33	16.44	19.47	29.32	36.12
2115	2115	Natural Section	3167	3166	239+53.93	75.76R	238+15.68	75.11R	12.36	16.47	19.50	29.35	36.16	12.36	16.47	19.50	29.35	36.16
1080	949.1	Pipe	3168	3167	240+46.55	75.12R	239+53.93	75.76R	9.45	11.87	13.61	18.97	25.24	9.45	11.87	13.61	18.97	25.27
2117	2117	Natural Section	3173	3173.1	256+92.43	66.80R	251+47.12	72.70R	11.19	13.73	15.80	22.52	28.07	11.19	13.73	15.80	22.52	28.07
2120	2120	Natural Section	3174	3175	258+40.83	67.57R	261+10.99	72.23R	3.46	5.07	6.63	12.81	17.70	3.46	5.07	6.63	12.81	17.68
1084	906.1	Pipe	3174	3173	258+40.83	67.57R	256+92.43	66.80R	1.95	2.21	2.35	-3.30	7.69	1.95	2.21	2.35	-3.30	7.76
1087	908.1	Pipe	3178	3179	269+26.53	71.08R	272+96.01	72.75R	12.80	15.00	16.71	21.64	24.69	12.80	15.00	16.71	21.62	24.59
2126	2126	Natural Section	3179	3179.1	272+96.01	72.75R	276+23.11	81.41R	17.82	18.08	19.01	31.36	49.93	17.82	17.58	17.77	30.15	46.69
1091	912.1	Pipe	3190	3191	279+80.62	70.47R	281+30.90	70.35R	16.94	18.68	19.82	24.43	25.12	16.92	17.81	16.28	18.98	20.80
2129	2129	Natural Section	3191	3192	281+30.90	70.35R	281+74.43	78.38R	16.99	18.72	19.84	26.70	37.54	16.98	17.82	16.24	24.83	31.33
1092	913.1	Pipe	3192	3193	281+74.43	78.38R	282+39.04	77.81R	17.04	18.75	19.87	26.74	37.60	17.02	17.83	16.21	24.86	31.43
2130	2130	Natural Section	3193	3195	282+39.04	77.81R	284+91.09	71.52R	17.34	18.94	20.00	26.92	37.83	17.32	17.93	16.07	25.05	31.68
1094	915.1	Pipe	3196	3197	285+28.24	81.11R	286+02.52	80.01R	8.39	10.60	12.28	14.27	15.13	8.39	10.60	13.29	16.88	16.13
2134	2134	Natural Section	3197	3200	286+02.52	80.01R	289+97.51	77.86R	11.06	15.68	18.86	26.16	29.96	11.06	15.68	18.86	26.47	28.51
1096	917.1	Pipe	3200	3201	289+97.51	77.86R	290+47.50	77.61R	11.07	14.81	17.22	22.94	25.63	11.07	14.81	17.22	23.30	23.99
2135	2135	Natural Section	3201	3204	290+47.50	77.61R	294+77.10	74.05R	16.61	22.81	26.58	36.73	41.32	16.61	22.81	26.58	36.31	38.07
1098	918.1	Pipe	3204	3205	294+77.10	74.05R	295+83.33	75.71R	15.28	19.73	23.18	24.72	24.12	15.28	19.73	23.17	23.25	17.95
2137	2137	Natural Section	3205	3206	295+83.33	75.71R	296+52.22	57.66R	14.95	18.24	21.55	21.31	23.29	14.95	18.24	21.53	19.58	25.86
2140	2140	Natural Section	3207	3208	296+53.94	63.15L	300+81.63	114.58L	61.18	65.54	69.55	112.50	180.53	61.18	65.51	69.17	115.84	156.52
2138	2138	Natural Section	3206	3210	296+52.22	57.66R	302+42.83	72.42R	24.11	39.27	48.84	61.96	69.46	24.11	39.28	48.87	54.07	48.69
1099	919.1	Pipe	3206	3207	296+52.22	57.66R	296+53.94	63.15L	12.61	-17.62	-21.49	-27.15	-25.54	12.61	-17.98	-22.02	-27.26	-22.72
1101	920.1	Pipe	3210	3211	302+42.83	72.42R	302+85.78	73.79R	17.38	23.58	26.76	30.22	28.76	17.07	21.54	22.81	18.47	18.45
2142	2142	Natural Section	3211	3214	302+85.78	73.79R	307+02.02	73.42R	17.27	23.50	26.71	36.52	46.40	16.65	20.36	24.61	39.62	-63.25
1103	921.1	Pipe	3214	3215	307+02.02	73.42R	307+53.98	72.91R	17.22	23.47	26.70	36.10	34.12	16.06	22.52	22.80	21.97	21.72
2145	2145	Natural Section	3215	3216	307+53.98	72.91R	308+64.98	58.01R	17.21	23.47	26.71	37.19	46.87	15.77	22.90	27.51	-48.00	-83.73
2146	2146	Natural Section	3216	3220	308+64.98	58.01R	311+63.84	72.41R	7.32	11.09	13.48	26.86	39.92	9.10	14.08	17.07	69.54	90.36
1104	923.1	Pipe	3216	3217	308+64.98	58.01R	308+64.53	68.10L	14.24	18.31	20.95	26.81	27.93	14.24	18.02	-21.09	-24.52	-20.89
2144	2144	Natural Section	3217	3218	308+64.53	68.10L	311+54.06	111.30L	51.72	59.87	63.97	88.98	180.54	44.63	51.38	-66.26	-74.99	94.68
1106	924.1	Pipe	3220	3221	311+63.84	72.41R	312+16.94	72.19R	7.30	11.08	13.47	26.79	34.43	9.71	15.07	16.73	16.28	19.01
2147	2147	Natural Section	3221	3223	312+16.94	72.19R	315+85.25	55.37R	7.29	11.07	13.45	26.67	30.56	11.00	16.95	17.22	74.64	57.86
1107	926.1	Pipe	3223	3222	315+85.25	55.37R	315+85.63	69.66L	7.27	11.06	13.45	26.63	30.27	12.21	18.69	-25.24	-30.30	-29.14
2149	2149	Natural Section	3222	3222.1	315+85.63	69.66L	320+56.13	107.65L	60.52	79.02	92.00	132.13	224.95	60.33	83.48	-113.74	-153.76	-196.36
1109	927.1	Pipe	3225	3226	317+60.25	74.94R	318+20.20	74.88R	4.26	5.29	6.13	8.42	10.71	4.26	12.14	15.27	11.91	11.55
2151.1	2151.1	Natural Section	3226	3226.1	318+20.20	74.88R	318+86.06	70.47R	4.09	5.05	5.82	7.87	9.88	4.09	21.65	36.19	150.02	182.09

NOTES:

1. THIS DATA WAS OBTAINED FROM THE XPSWMM (V.2021.3) MODEL IN THE "LEAGUE CITY BIKE FACILITIES DRAINAGE STUDY PLAN

NO.	DATE	REVISION	APPROVED

STATE OF TEXAS
DAVID CORNYN
138892
LICENSED
PROFESSIONAL ENGINEER
8/2/2023

Texas Department of Transportation
©2023

JONES|CARTER
Texas Board of Professional Engineers Registration No. F-23290
4350 Lockhill Selma Rd, Suite 200 • San Antonio, Texas 78249 • 210.494.5511

SH 96, FM 270

HYDRAULIC DATA SHEET

SHEET 1 OF 3

DRAWN	FED.RD. DIV.NO.	FEDERAL AID PROJECT NO.		HIGHWAY NO.
AA	06			FM 270, ETC
DESIGNED	STATE	DIST.	COUNTY	SHEET NO.
JT	TEXAS	HOUSTON	GALVESTON	200
CHECKED	CONT.	SECT.	JOB	
NG	0912	73	215	
APPROVED				
DD				

PENTABLE:LCBF.tbl
PLOTDRIVER:LCBF.pltcfg
DATE:8/2/2023 12:24:58 AM USER:sss
FILE:c:\bms\pwe101-01\stella.staver-scull\dms22645\LCBF_HYD_01.dgn

PROPOSED CONDITIONS									DITCH MODEL					WATERSHED MODEL				
Link Name	Conduit Name	Conduit Type	Upstream Node	Downstream Node	Upstream Station	Upstream Offset	Downstream Station	Downstream Offset	2-Year Peak Flow (cfs)	5-Year Peak Flow (cfs)	10-Year Peak Flow (cfs)	100-Year Peak Flow (cfs)	500-Year Peak Flow (cfs)	2-Year Peak Flow (cfs)	5-Year Peak Flow (cfs)	10-Year Peak Flow (cfs)	100-Year Peak Flow (cfs)	500-Year Peak Flow (cfs)
1110	928.1	Pipe	3227	3228	320+46.82	70.94R	321+04.18	73.68R	3.91	4.80	5.45	7.19	7.15	3.86	11.98	13.49	15.44	16.30
2152	2152	Natural Section	3228	3229	321+04.18	73.68R	321+95.46	78.44R	6.38	8.04	9.30	12.88	14.72	6.37	17.86	36.43	146.09	165.10
1111	929.1	Pipe	3229	3230	321+95.46	78.44R	322+32.71	80.99R	6.14	7.73	8.88	11.78	11.83	6.11	10.03	9.91	17.75	18.53
2153	2153	Natural Section	3230	3231	322+32.71	80.99R	322+81.47	83.87R	6.00	7.55	8.64	11.30	11.06	5.96	17.21	36.47	144.76	158.52
1112	1112 pipe	Pipe	3231	3232	322+81.47	83.87R	324+40.52	94.94R	5.86	7.39	8.42	10.79	10.28	5.76	17.21	18.53	17.14	16.58
2154	2154	Natural Section	3232	3233	324+40.52	94.94R	327+09.91	110.75R	12.89	16.38	18.87	26.03	29.68	12.62	17.47	37.47	143.93	150.12
1113	1263.1	Pipe	3233	3234	327+09.91	110.75R	327+75.67	114.85R	12.50	15.49	17.41	21.98	23.73	11.35	12.67	13.60	11.21	6.68
2155	2155	Natural Section	3234	3235	327+75.67	114.85R	329+55.54	107.36R	11.50	13.80	15.46	19.37	21.32	9.67	17.63	38.43	141.62	127.68
1115	932.1	Pipe	3235	3237.1	329+55.54	107.36R	331+37.65	87.87R	10.53	12.21	13.57	16.95	18.28	7.53	11.68	-12.41	10.54	9.58
2159	2159	Natural Section	3236	3236.1	331+75.80	96.25R	339+34.91	101.31R	58.70	78.48	94.52	142.03	223.67	261.85	293.14	380.32	777.14	1177.71
1117	934.1	Pipe	3241	3246	342+15.43	71.21L	342+18.74	67.22R	31.97	41.23	47.80	71.95	100.64	96.10	202.19	203.30	262.18	322.55
2160	2160	Natural Section	3246	3246.2	342+18.74	67.22R	342+14.81	136.94R	31.25	40.36	47.77	71.98	100.79	96.30	202.79	203.94	261.59	390.21
1118	1118.1	Pipe	3247	3246.1	343+29.85	113.53R	342+47.47	113.19R	53.05	62.48	81.52	105.78	113.53	49.57	71.25	75.87	92.56	92.87
2163	2163	Natural Section	3249	3247	348+64.25	111.29R	343+29.85	113.53R	51.77	61.07	81.15	102.64	165.94	46.83	64.16	78.12	123.14	205.21
1119	937.1	Pipe	3250	3249	349+01.74	113.41R	348+64.25	111.29R	50.86	59.70	67.89	67.18	68.58	44.33	49.57	49.63	55.42	54.20
2165	2165	Natural Section	3251	3250	351+53.26	116.07R	349+01.74	113.41R	50.65	59.05	83.20	105.71	165.86	43.23	61.59	78.00	119.15	199.39
1121	938.1	Pipe	3252	3251	352+87.63	121.86R	351+53.26	116.07R	50.27	58.43	58.40	58.98	57.85	41.71	46.19	45.57	50.51	49.45
2166	2166	Natural Section	3255	3252	356+68.20	104.76R	352+87.63	121.86R	52.76	57.31	82.85	105.20	164.74	42.03	62.37	77.58	115.18	194.08
1122	940.1	Pipe	3256	3255	357+21.57	99.67R	356+68.20	104.76R	57.21	63.80	65.18	60.04	57.66	49.28	54.99	54.72	46.47	44.99
2168	2168	Natural Section	3257	3256	372+26.88	77.65R	357+21.57	99.67R	65.48	81.03	90.25	125.58	165.01	62.60	77.74	87.87	113.30	182.67
1124	942.1	Pipe	3258	3257	375+75.21	79.74R	372+26.88	77.65R	60.25	66.37	80.28	102.84	134.45	57.29	64.22	80.34	102.18	120.99
2169	2169	Natural Section	3263	3258	398+21.53	75.40R	375+75.21	79.74R	63.30	80.91	109.96	130.14	211.96	62.74	82.04	110.88	126.79	201.98
1126	944.1	Pipe	3264	3263	401+66.88	74.27R	398+21.53	75.40R	28.62	38.16	45.62	64.49	62.16	28.01	39.32	44.05	61.10	60.60
2172	2172	Natural Section	3265	3265.1	416+37.90	75.19R	410+40.76	76.80R	27.59	40.93	51.52	85.72	114.78	27.56	40.82	51.58	86.04	114.74
1127	945.1	Pipe	3266	3265	416+81.06	75.77R	416+37.90	75.19R	9.85	9.67	9.53	10.04	10.08	9.80	9.66	9.51	10.03	10.07
2171.1	2171.1	Natural Section	3268	3268.1	418+99.44	81.10L	416+30.09	82.36L	22.54	28.83	34.34	55.55	75.95	22.54	28.83	34.33	55.55	75.94
1125	943.1	Pipe	3262	3261	398+15.45	77.69L	397+74.52	76.36L	13.73	17.46	20.22	24.66	27.43	13.37	16.69	19.01	22.39	23.22
2170	2170	Natural Section	3261	3260	397+74.52	76.36L	374+19.07	81.06L	25.79	34.81	42.07	64.33	87.79	25.16	32.90	39.56	60.99	80.99
1123	941.1	Pipe	3260	3259	374+19.07	81.06L	373+57.94	81.40L	23.89	31.31	36.50	47.71	54.35	22.59	28.42	33.44	39.04	40.13
2167	2167	Natural Section	3259	3254	373+57.94	81.40L	352+61.35	74.92L	32.01	43.97	52.81	81.29	104.44	27.04	33.27	40.03	66.48	90.24
1120	939.1	Pipe	3254	3253	352+61.35	74.92L	351+88.23	82.19L	31.30	41.87	48.10	63.70	70.72	67.50	68.09	65.65	61.39	60.35
2164	2164	Natural Section	3253	3248	351+88.23	82.19L	342+86.65	107.43L	39.47	49.41	56.87	80.95	115.26	67.10	125.62	163.80	296.35	369.88
1116	935.1	Pipe	3248	3240	342+86.65	107.43L	342+36.43	106.94L	31.37	42.01	50.43	70.47	74.91	86.21	86.75	84.43	74.47	69.22
2157	2157	Natural Section	3240	3239	342+36.43	106.94L	342+06.73	105.65L	31.28	41.97	50.40	70.43	112.08	104.69	208.21	288.85	486.62	612.38
1114	933.1	Pipe	3237	3237.1	330+42.53	77.44L	331+37.65	87.87R	58.75	72.78	82.32	120.34	203.94	266.23	298.07	327.11	336.64	325.04
2148	2148	Natural Section	3219	3222	312+23.15	110.84L	315+85.63	69.66L	56.10	74.83	87.27	122.39	208.96	55.17	69.06	-74.98	-74.57	104.41
1105	925.1	Pipe	3218	3219	311+54.06	111.30L	312+23.15	110.84L	51.64	59.84	63.95	88.23	99.17	42.18	54.45	55.54	50.49	48.82
2143	2143	Natural Section	3213	3217	307+62.85	102.13L	308+64.53	68.10L	41.14	45.91	48.74	83.89	166.30	36.36	38.64	45.12	53.53	127.46
1102	922.1	Pipe	3212	3213	306+87.07	103.46L	307+62.85	102.13L	41.29	45.97	48.80	64.81	64.24	37.34	37.60	38.21	35.20	34.48
2141	2141	Natural Section	3209	3212	301+58.53	115.77L	306+87.07	103.46L	42.70	47.63	50.40	87.32	168.25	42.02	43.84	43.18	80.17	140.43
1100	1076.1	Pipe	3208	3209	300+81.63	114.58L	301+58.53	115.77L	47.92	52.72	56.41	63.99	59.36	47.92	52.23	54.73	48.34	32.98
2136	2136	Natural Section	3199	3202	290+51.30	79.46L	294+84.25	120.43L	62.17	74.90	83.03	109.69	162.27	62.17	74.83	83.16	110.02	153.27
1095	916.1	Pipe	3198	3199	289+80.45	80.18L	290+51.30	79.46L	54.93	63.60	68.26	82.52	134.85	54.93	63.57	68.10	79.87	126.43
2131	2131	Natural Section	3195	3196	284+91.09	71.52R	285+28.24	81.11R	8.39	10.59	12.27	14.28	15.10	8.39	10.60	13.34	16.96	16.23
1093	914.1	Pipe	3195	3194	284+91.09	71.52R	284+84.77	62.12L	14.27	15.15	15.60	18.80	23.54	14.16	10.69	11.52	14.34	19.03
2133	2133	Natural Section	3194	3194.1	284+84.77	62.12L	287+28.54	75.47L	55.18	64.35	69.64	82.56	135.03	55.18	64.34	69.58	80.40	128.01
2132	2132	Natural Section	3189	3194	281+63.95	77.47L	284+84.77	62.12L	52.35	63.31	70.29	85.66	143.24	52.35	63.31	70.28	85.08	144.62
1090	911.1	Pipe	3188	3189	279+51.78	78.10L	281+63.95	77.47L	45.64	54.02	59.12	74.64	79.23	45.64	54.02	59.10	71.50	71.11
2128	2128	Natural Section	3187	3188	275+67.46	81.28L	279+51.78	78.10L	46.76	54.99	60.23	75.05	127.37	46.76	54.99	60.23	73.69	128.96
1089	910.1	Pipe	3186	3187	274+96.67	80.60L	275+67.46	81.28L	48.56	57.41	62.80	76.31	94.55	48.56	57.41	62.80	75.85	92.73
2127	2127	Natural Section	3185	3186	271+26.48	80.78L	274+96.67	80.60L	51.10	61.48	69.25	91.93	131.13	51.10	61.48	69.25	91.75	132.71
1086	909.1	Pipe	3184	3185	269+35.56	82.63L	271+26.48	80.78L	28.22	31.76	33.55	33.01	31.69	28.22	31.75	33.49	29.28	27.23
2119	2119	Natural Section	3172	3176	257+67.98	89.73L	263+19.19	90.86L	9.53	10.97	11.62	11.07	12.01	9.53	10.97	11.62	11.07	12.01
1083	907.1	Pipe	3172	3171	257+67.98	89.73L	256+99.58	87.01L	-9.73	-11.48	-12.69	-14.62	-11.76	-9.73	-11.48	-12.69	-14.61	-11.63
2118.1	2118.1	Natural Section	3171	3171.1	256+99.58	87.01L	250+98.53	86.36L	11.62	15.61	19.52	39.85	54.95	11.62	15.61	19.52	39.87	55.04
1082	947.1	Pipe	3170	3169	243+89.77	85.77L	243+18.22	84.95L	9.88	13.17	16.36	27.80	26.91	9.88	13.17	16.36	27.82	26.94
2116	2116	Natural Section	3169	3164	243+18.22	84.95L	240+50.18	78.50L	10.02	13.33	16.59	28.30	33.47	10.02	13.33	16.59	28.33	33.50
1081	948.1	Pipe	3164	3163	240+50.18	78.50L	239+55.02	78.70L	10.36	13.70	17.04	28.97	34.16	10.36	13.70	17.04	28.99	34.19
2114	2114	Natural Section	3163	3162	239+55.02	78.70L	237+89.40	75.58L	21.68	28.96	34.99	54.97	70.99	21.68	28.96	34.99	54.98	71.06
1079	950.1	Pipe	3162	3161	237+89.40	75.58L	237+11.16	75.57L	21.65	28.93	34.96	54.91	70.78	21.65	28.93	34.96	54.92	70.84
2113	2113	Natural Section	3161	3160	237+11.16	75.57L	234+19.14	75.16L	21.66	28.93	34.96	54.69	70.18	21.66	28.93	34.96	54.70	70.24
1077	952.1	Pipe	3160	3159	234+19.14	75.16L	233+58.44	75.40L	21.61	28.87	34.85	53.85	61.11	21.61	28.87	34.85	53.86	61.19
2110	2110	Natural Section	3159	3159.1	233+58.44	75.40L	227+87.93	80.33L	21.56	28.77	34.57	51.11	61.58	21.56	28.77	34.57	51.11	61.67
2104	2104	Natural Section	3149	3145	242+59.72	56.46R	216+87.74	95.19R	7.58	9.53	11.18	17.01	21.56	7.58	9.53	11.18	17.01	21.56
2107	2107	Natural Section	3147	3146	242+52.32	41.79L	218+22.08	102.26R	3.02	3.80	4.46	6.87	8.70	3.02	3.80	4.46	6.87	8.70
1073	956.1	Pipe	3148	3147	243+26.14	40.25L	242+52.32	41.79L	3.09	3.89	4.54	6.95	8.79	3.09	3.89	4.54	6.95	8.79
1074	957.1	Pipe	3150	3149	243+23.73	57.13R	242+59.72	56.46R	7.66	9.60	11.25	17.10	21.65	7.66	9.60	11.25	17.10	21.65
2158	2158	Natural Section	3239	3241	342+06.73	105.65L	342+15.43	71.21L	32.80	42.05	47.87	71.82	99.79	88.09	195.25	198.78	174.62	273.02
1060	981.1	Pipe	3121	3120	218+37.68	66.31R	217+60.28	65.89R	5.82	7.06	7.75	11.21	13.17	5.82	7.06	7.75	11.21	13.17
2079	2079	Natural Section	3120	3115	217+60.28	65.89R	216+43.90	54.75R	5.86	7.10	7.81	11.29	18.98	5.86	7.10	7.81	11.29	18.97
1061	982.1	Pipe	3119	3118	218+83.08	44.07L	217+77.47	44.70L	9.78	13.42	16.37	25.15	27.14	9.78	13.42	16.37	25.15	27.14
2081	2081	Natural Section	3118	3117	217+77.47	44.70L	216+99.20	45.22L	16.11	21.24	24.88	32.18	38.89	16.11	21.24	24.88	32.18	38.89
1071	1018.1	Pipe	3144	3143	212+75.68	83.61R	212+02.58	83.28R	33.84	43.55	49.79	63.51	66.86	33.84	43.55	49.79	63.51	66.86
1067	1017.1	Pipe	3135	3136	213+05.55	104.20L	212+28.90	104.20L	30.65	40.95	50.15	67.05	64.58	30.65	40.95	50.15	67.05	64.57
2150	2150	Natural Section	3224	3225	316+44.43	70.43R	317+60.25	74.94R	4.54	5.69	6.68	10.18	12.52	4.54	23.30	36.17	151.72	190.15
2156	2156	Natural Section	3238	3239	332+97.71	331.93L	342+06.73	105.65L	22.53	28.36	32.06	58.99	68.33	-20.56	-68.33	-92.66	-188.90	-211.34
2096.1	2096.1	Natural Section	3127	3127.1	226+19.54	49.47R	228+55.22	50.78R	5.99	7.99	9.76	15.46	18.31	5.99	7.99	9.76	15.46	18.33
2095	2095	Natural Section	3127	3126	226+19.54	49.47R	223+21.09	53.21R	-1.80	-2.53	-3.17	-5.37	-6.23	-1.80	-2.53	-3.17	-5.37	-6.23
2100	2100	Natural Section	3136	3137	212+28.90	104.20L	211+60.72	105.95L	30.66	40.95	50.16	66.81	98.77	30.66	40.95	50.15	66.79	98.83
1068	1016.1	Pipe	3137	3139	211+60.72	105.95L	211+22.30	105.81L	30.68	37.42	38.43	37.01	37.24	30.68	37.42	38.43	37.01	37.24
1069	1019.1	Pipe	3141	3140	210+80.47	77.49L	211+22.56	75.12L	22.26	29.24	31.34	25.41	26.71	22.26	29.24	31.34	25.42	26.71
1070	1260.1	Pipe	3142	3140	211+21.10	64.72R	211+22.56	75.12L	59.19	76.11	87.72	120.82	101.77	59.19	76.11	87.72	120.82	101.77
2102	2102	Natural Section	3143	3142	212+02.58	83.28R	211+21.10	64.72R	33.65	43.28	49.48	63.19	66.15	33.65	43.28	49.48	63.19	66.15
2109	2109	Natural Section	3132	3133	218+87.45	101.67L	218+11.17	108.61L	25.28	33.17	40.40	51.26	77.96	25.28	33.17	40.39	51.21	78.01
2159.2	2159.2	Natural Section	3245	3245.1	341+55.07	619.53R	339+59.85	1407.05R	124.19	159.42	180.40	279.56	384.52	376.21	551.61	528.09	912.77	1583.09
2159.1	2159.1	Natural Section	3244	3245	342+11.06	178.72R	341+55.07	619.53R	124.24	159.44	180.42	279.59	386.44	374.16	524.95	516.60	982.54	1596.18
1070.2	1262.1	Pipe	3139	3138.1	211+22.30	105.81L	210+70.29	214.03L	107.86	137.83	153.86	181.29	163.04	107.86	137.83	153.86	181.29	163.04
1070.1	1261.1	Pipe	3140	3139	211+22.56	75.12L	211+22.30	105.81L	77.83	101.30	116.84	145.22	126.66	77.83	101.30	116.84	145.22	126.65
2122	2122	Natural Section	3175	3175.1	261+10.99	72.23R	265+18.81	73.30R	16.11	20.82	24.86	40.77	54.23	16.11	20.82	24.86	40.77	54.22
2121	2121	Natural Section	3177	3184	263+84.88	90.89L	269+35.56	82.63L	30.55	36.27	40.50	52.25	79.93	30.55	36.27	40.50	52.24	79.95
1085	1075.1	Pipe	3176	3177	263+19.19	90.86L	263+84.88	90.89L	9.50	9.87	9.69	9.13	13.66	9.50	9.87	9.67	7.86	13.67
1097	1020.1	Pipe	3202	3203	294+84.25	120.43L	295+76.19	118.74L	58.00	68.84	75.67	106.94	161.85	58.00	68.93	75.22	107.24	150.61
2139	2139	Natural Section	3203	3207	295+76.19	118.74L	296+53.94	63.15L	56.77	67.41	73.87	106.37	161.73	56.76	67.24	73.07	106.54	149.51
2125	2125	Natural Section	3183	3183.1	266+59.82	1140.65R	271+42.89	151.17R	9.21	10.65	10.67	21.35	30.77	9.21	10.65	10.67	21.35	30.77
2124	2124	Natural Section	3182	3181	266+25.21	1083.07R	267+11.73	842.48R	13.18	17.14	20.27	31.54	41.02	13.18	17.14	20.27	31.54	41.02
1088	1022.1	Pipe	3181	3180	267+11.73	842.48R	267+53.42	746.52R	9.05	9.78	10.27	11.54	12.24	9.05	9.78	10.27	11.54	12.24
2123	2123	Natural Section	3180	3178	267+53.42	746.52R	269+26.53	71.08R	12.03	15.98	19.18	30.29	39.58	12.03	15.98	19.18	30.29	39.58
2106	2106	Natural Section	3152	3148	246+68.20	41.10L	243+26.14	40.25L	3.11	3.91	4.56	6.98	8.83	3.11	3.91	4.56	6.98	8.83
2105	2105	Natural Section	3151	3150	244+39.24	54.18R	243+23.73	57.13R	7.68	9.64	11.29	17.16	21.73	7.68	9.64	11.29	17.16	21.73
2173	2173	Natural Section	3267	3266	419+03.58	84.99R	416+81.06	75.77R	37.69	48.74	58.45	97.16	135.79	37.69	48.74	58.45	97.16	135.79
2089	2089	Natural Section	3274	3276	221+42.75	1113.20L	219+66.37	486.00L	7.61	9.57	11.32	17.74	23.75	7.61	9.57	11.32	17.74	23.75
2090	2090	Natural Section	3275	3119	219+56.49	449.85L	218+83.08	44.07L	7.04	8.66	9.99	15.07	20.12	7.04	8.66	9.99	15.07	20.12
1134	1029.1	Pipe	3276	3275	219+66.37	486.00L	219+56.49	449.85L	7.09	8.73	10.08	13.73	14.09	7.09	8.73	10.08	13.73	14.09
1133	1028.1	Pipe	3277	3278	218+69.36	276.96L	218+57.19	234.91L	6.63	7.82	8.56	10.73	12.83	6.63	7.82	8.56	10.73	12.83

NOTES:

1. THIS DATA WAS OBTAINED FROM THE XPSWMM (V.2021.3) MODEL IN THE "LEAGUE CITY BIKE FACILITIES DRAINAGE STUDY PLAN

NO.	DATE	REVISION	APPROVED

STATE OF TEXAS
DAVID CORNYN
138892
LICENSED
PROFESSIONAL ENGINEER
8/2/2023

Texas Department of Transportation
©2023

JONES|CARTER
Texas Board of Professional Engineers Registration No. F-23290
4350 Lockhill Selma Rd, Suite 100• San Antonio, Texas 78249 •210.494.5511

SH 96, FM 270

HYDRAULIC DATA SHEET

DRAWN	FED.RD. DIV.NO.	FEDERAL AID PROJECT NO.		HIGHWAY NO.
AA	06			FM 270,ETC
DESIGNED	STATE	DIST.	COUNTY	SHEET NO.
JT	TEXAS	HOUSTON	GALVESTON	201
CHECKED	CONT.	SECT.	JOB	
NG	0912	73	215	
APPROVED				
DD				

PENTABLE:LCBF.tbl
PLOTDRIVER:LCBF.pltcfg
DATE:8/2/2023 12:25:08 AM USER:sss
FILE:c:\dms\pwe101-01\stella.staver-scul\dms22645\LCBF_HYD_02.dgn

PROPOSED CONDITIONS									DITCH MODEL					WATERSHED MODEL				
Link Name	Conduit Name	Conduit Type	Upstream Node	Downstream Node	Upstream Station	Upstream Offset	Downstream Station	Downstream Offset	2-Year Peak Flow (cfs)	5-Year Peak Flow (cfs)	10-Year Peak Flow (cfs)	100-Year Peak Flow (cfs)	500-Year Peak Flow (cfs)	2-Year Peak Flow (cfs)	5-Year Peak Flow (cfs)	10-Year Peak Flow (cfs)	100-Year Peak Flow (cfs)	500-Year Peak Flow (cfs)
2083	2083	Natural Section	3278	3118	218+57.19	234.91L	217+77.47	44.70L	6.59	7.82	8.58	10.84	13.26	6.59	7.82	8.58	10.84	13.26
2084	2084	Natural Section	3279	3277	219+51.06	572.03L	218+69.36	276.96l	6.71	7.86	8.66	11.84	14.23	6.71	7.86	8.66	11.84	14.23
1132	1027.1	Pipe	3280	3279	219+61.27	604.05L	219+51.06	572.03L	6.86	7.94	8.78	12.43	14.03	6.86	7.94	8.78	12.43	14.03
2085	2085	Natural Section	3281	3280	220+02.83	750.03L	219+61.27	604.05L	7.10	9.05	10.41	14.37	18.30	7.10	9.05	10.41	14.37	18.30
1131	1026.1	Pipe	3282	3281	220+13.53	789.29L	220+02.83	750.03L	7.15	8.57	8.95	9.40	9.50	7.15	8.57	8.95	9.40	9.50
2086	2086	Natural Section	3283	3282	220+38.73	878.29L	220+13.53	789.29L	7.21	9.16	10.79	16.47	21.21	7.21	9.16	10.79	16.47	21.21
2171	2171	Natural Section	3268.2	3268.2.1	415+90.13	81.16L	410+38.97	76.48L	20.54	26.07	30.38	49.44	67.59	20.54	26.07	30.38	49.30	66.83
1159	1054.1	Pipe	3268.1	3268.2	416+30.09	82.36L	415+90.13	81.16L	8.14	8.08	7.96	7.63	7.52	8.14	8.08	7.96	7.63	7.52
2097.2	2097.2	Natural Section	3129.3	3132	233+28.29	42.12L	218+87.45	101.67L	18.28	21.80	24.31	32.83	48.50	18.28	21.80	24.31	32.83	48.50
1064.1	1055.1	Pipe	3129.1	3129.2	231+34.51	40.46L	231+73.03	41.29L	18.30	21.81	24.33	32.14	33.97	18.30	21.81	24.33	32.14	33.97
2097.1	2097.1	Natural Section	3129.2	3129.3	231+73.03	41.29L	233+28.29	42.12L	18.30	21.81	24.32	33.66	50.44	18.30	21.81	24.32	33.66	50.44
1077.1	1073.1	Pipe	3159.1	3159.3	227+87.93	80.33L	227+49.08	82.04L	21.33	27.54	32.56	46.90	53.45	21.33	27.54	32.56	46.91	53.66
2110.1	2110.1	Natural Section	3159.3	3159.4	227+49.08	82.04L	223+37.36	112.06L	17.95	23.08	27.86	41.22	51.42	17.95	23.08	27.86	41.05	51.46
1077.3	1072.1	Pipe	3159.4	3159.6	223+37.36	112.06L	222+98.97	110.48L	15.73	20.41	24.81	32.52	23.97	15.73	20.41	24.85	32.81	23.92
2110.2	2110.2	Natural Section	3159.6	3132	222+98.97	110.48L	218+87.45	101.67L	15.35	19.98	24.74	28.60	50.73	15.35	19.98	24.74	28.61	50.78
1083.1	1074.1	Pipe	3171.1	3171.3	250+98.53	86.36L	250+33.17	84.34L	10.38	12.38	12.75	12.40	11.90	10.38	12.38	12.75	12.40	11.90
2118	2118	Natural Section	3171.3	3170	250+33.17	84.34L	243+89.77	85.77L	10.08	13.92	17.62	31.55	37.58	10.08	13.92	17.62	31.56	37.66
1114.1	1080.1	Pipe	3237.1	3236	331+37.65	87.87R	331+75.80	96.25R	58.81	74.11	87.80	127.82	213.52	263.31	290.21	298.01	325.81	327.86
2160.1	2160.1	Natural Section	3246.1	3246.2	342+47.47	113.19R	342+14.81	136.94R	53.09	62.54	81.58	105.83	166.73	49.66	71.56	78.65	127.05	209.90
2160.2	2160.2	Natural Section	3246.2	3244	342+14.81	136.94R	342+11.06	178.72R	124.28	159.46	180.45	279.63	387.36	373.67	518.97	517.33	990.14	1602.36
2172.1	2172.1	Natural Section	3265.1	3264	410+40.76	76.80R	401+66.88	74.27R	26.81	33.25	41.64	42.92	67.04	26.58	34.18	42.41	42.62	63.58
2171.2	2171.2	Natural Section	3268.2.1	3262	410+38.97	76.48L	398+15.45	77.69L	14.51	18.89	21.76	29.23	40.55	14.51	18.76	21.58	28.18	39.55
2149.1	2149.1	Natural Section	3222.1	3237	320+56.13	107.65L	330+42.53	77.44L	59.66	73.61	84.44	121.87	210.07	70.80	98.08	-135.40	-184.63	-219.26
2133.1	2133.1	Natural Section	3194.1	3198	287+28.54	75.47L	289+80.45	80.18L	55.05	64.00	68.96	82.54	134.87	55.05	63.99	68.86	80.09	126.99
2122.1	2122.1	Natural Section	3175.1	3178	265+18.81	73.30R	269+26.53	71.08R	15.76	20.45	24.50	39.47	41.70	15.76	20.45	24.50	39.47	41.67
2117.1	2117.1	Natural Section	3173.1	3168	251+47.12	72.70R	240+46.55	75.12R	9.04	11.28	12.95	18.04	24.05	9.04	11.28	12.95	18.04	24.09
1088.1	1264.1	Pipe	3183.1	3183.1.1	271+42.89	151.17R	271+58.86	138.27R	10.30	11.66	-12.51	-19.15	-18.46	10.29	10.46	-12.52	-19.29	-19.02
2125.1.1	2125.1.1	Natural Section	3183.1.1	3179	271+58.86	138.27R	272+96.01	72.75R	10.41	11.77	-12.81	-19.67	-19.43	10.40	10.55	-12.81	-19.81	-20.01
1087.1	601.1	Pipe	3179.1	3179.2	276+23.11	81.41R	276+97.89	80.64R	16.49	18.26	19.29	20.21	20.07	16.48	17.63	17.31	17.48	17.57
2126.1.1	2126.1.1	Natural Section	3179.2	3190	276+97.89	80.64R	279+80.62	70.47R	16.69	18.45	19.44	26.78	39.07	16.68	17.69	17.02	24.69	29.25
2094.1	2094.1	Natural Section	3128.1	3124	225+89.33	40.43L	223+09.87	41.79L	5.44	8.33	11.37	20.31	24.48	5.44	8.33	11.37	20.31	24.48
2096	616.1	Natural Section	3127.1	3130	228+55.22	50.78R	231+67.50	56.94R	1.02	1.73	2.45	6.73	9.54	1.02	1.73	2.45	6.73	9.53
2096	2096 Pipe	Pipe	3127.1	3130	228+55.22	50.78R	231+67.50	56.94R	4.38	5.71	6.75	8.56	8.65	4.38	5.71	6.75	8.56	8.65
2151	2151_Channel	Natural Section	3226.1	3227	318+86.06	70.47R	320+46.82	70.94R	0.00	0.00	0.00	0.00	2.61	0.06	18.06	34.29	145.03	170.64
2151	2151_Pipe	Pipe	3226.1	3227	318+86.06	70.47R	320+46.82	70.94R	3.95	4.86	5.55	7.31	7.40	3.93	4.39	4.69	3.07	3.43
2097.3	621.1	Natural Section	3129.4	3129.1	230+85.46	41.29L	231+34.51	40.46L	11.03	15.61	18.80	30.42	46.31	11.03	15.61	18.80	30.42	46.31
2097.3	2097.3 Pipe	Pipe	3129.4	3129.1	230+85.46	41.29L	231+34.51	40.46L	7.63	7.73	7.73	7.51	7.50	7.63	7.73	7.73	7.51	7.50
2092.2	2092.2	Natural Section	3125.1	3121	219+43.25	53.52R	218+37.68	66.31R	5.83	7.33	8.28	11.74	19.01	5.83	7.33	8.28	11.74	19.01
2092.1	625.1	Natural Section	3125.2	3125.1	219+73.95	51.44R	219+43.25	53.52R	8.41	10.74	12.25	16.59	21.37	8.41	10.74	12.25	16.59	21.36
2092.1	2092 Pipe	Pipe	3125.2	3125.1	219+73.95	51.44R	219+43.25	53.52R	-2.67	-3.37	-3.64	-4.05	-3.62	-2.67	-3.37	-3.64	-4.05	-3.62
2101.2	2101.2	Natural Section	3138.1	3138	210+70.29	214.03L	209+22.06	496.87L	107.85	141.31	171.17	228.59	239.80	107.85	141.31	171.16	228.59	239.89
2203	2203	Natural Section	3305	3141	-	-	210+80.47	77.49L	22.32	29.53	35.25	50.65	55.99	22.32	29.53	35.25	50.65	55.99
1070.3	1070.3 Pipe	Pipe	3304	3305	-	-	-	-	22.88	30.17	35.70	53.82	61.34	22.88	30.17	35.70	53.82	61.34
1070.4	1070.4 Pipe	Pipe	3301	3302	-	-	-	-	34.03	42.86	49.12	73.52	76.44	34.03	42.86	49.12	73.52	76.44
2201	2201	Natural Section	3302	3142	-	-	211+21.10	64.72R	33.33	42.30	48.82	68.74	108.14	33.33	42.30	48.82	68.74	108.14
2202	2202	Natural Section	3303	3304	-	-	-	-	26.55	34.33	40.76	64.04	88.49	26.55	34.33	40.76	64.04	88.49
2200	2200	Natural Section	3300	3301	-	-	-	-	40.00	51.32	58.16	97.09	134.37	40.00	51.32	58.16	97.09	134.37
2091	2091	Natural Section	3122	3121	217+39.41	298.83R	218+37.68	66.31R	0.05	-0.61	-0.93	-1.01	-1.35	0.05	-0.61	-0.93	-1.01	-1.33
2159.3	655.1	Pipe	3236.1	3236.2	339+34.91	101.31R	339+62.81	102.06R	57.92	74.13	90.30	137.25	220.01	260.16	274.80	273.57	273.67	276.54
2159.3	2159.3 Crossing	Natural Section	3236.1	3236.2	339+34.91	101.31R	339+62.81	102.06R	0.00	0.00	0.00	0.00	0.00	0.00	32.72	126.49	724.56	1144.71
2159.4	2159.4	Natural Section	3236.2	3246.2	339+62.81	102.06R	342+14.81	136.94R	57.72	73.87	89.31	136.02	218.93	259.90	292.04	379.09	760.68	1169.98

NOTES:

1. THIS DATA WAS OBTAINED FROM THE XPSWMM (V.2021.3) MODEL IN THE "LEAGUE CITY BIKE FACILITIES DRAINAGE STUDY PLAN

TYPE A GRATE INLETS							
Link Name	Description	Grate Perimeter (FT)	Grate Area (SF)	Depth Allowed (FT)	Required Inlet Flow (CFS)	Inlet Capacity (CFS)	Number of Inlets Needed
2098	Type A - 4 Sided Grate Inlet	5	3.125	0.5	9.37	5.3	2
2151	Type A - 4 Sided Grate Inlet	5	3.125	0.5	6.06	5.3	2

FLUME LATERAL INLETS						
Link Name	Description	Pipe Area (SF)	Depth Allowed (FT)	Required Inlet Flow (CFS)	Inlet Capacity (CFS)	Number of Inlets Needed
2092	18" Flume Lateral Inlet	1.77	0.5	10.47	7.05	2
2096	18" Flume Lateral Inlet	1.77	0.5	8.56	7.05	2
2097	18" Flume Lateral Inlet	1.77	0.5	20.21	7.05	3

NO.	DATE	REVISION	APPROVED

STATE OF TEXAS
DAVID CORNYN
138892
LICENSED
PROFESSIONAL ENGINEER
8/2/2023

Texas Department of Transportation
©2023

JONES | CARTER
Texas Board of Professional Engineers Registration No. F-23290
4350 Lockhill Selma Rd, Suite 100 • San Antonio, Texas 78249 • 210.494.5511

SH 96, FM 270

HYDRAULIC DATA SHEET

SHEET 3 OF 3

DRAWN	FED.RD. DIV.NO.	FEDERAL AID PROJECT NO.		HIGHWAY NO.
AA	06			FM 270,ETC
DESIGNED				
JT	STATE	DIST.	COUNTY	SHEET NO.
CHECKED	TEXAS	HOUSTON	GALVESTON	
NG	CONT.	SECT.	JOB	202
APPROVED	0912	73	215	
DD				

PENTABLE:LCBF.tbl
PLOTDRIVER:LCBF.pltcfg
USER:sss
12:25:09 AM
DATE:8/2/2023
FILE:c:\bms\pwe101-01\stella.staver-scull\dms22645\LCBF_HYD_03.dgn

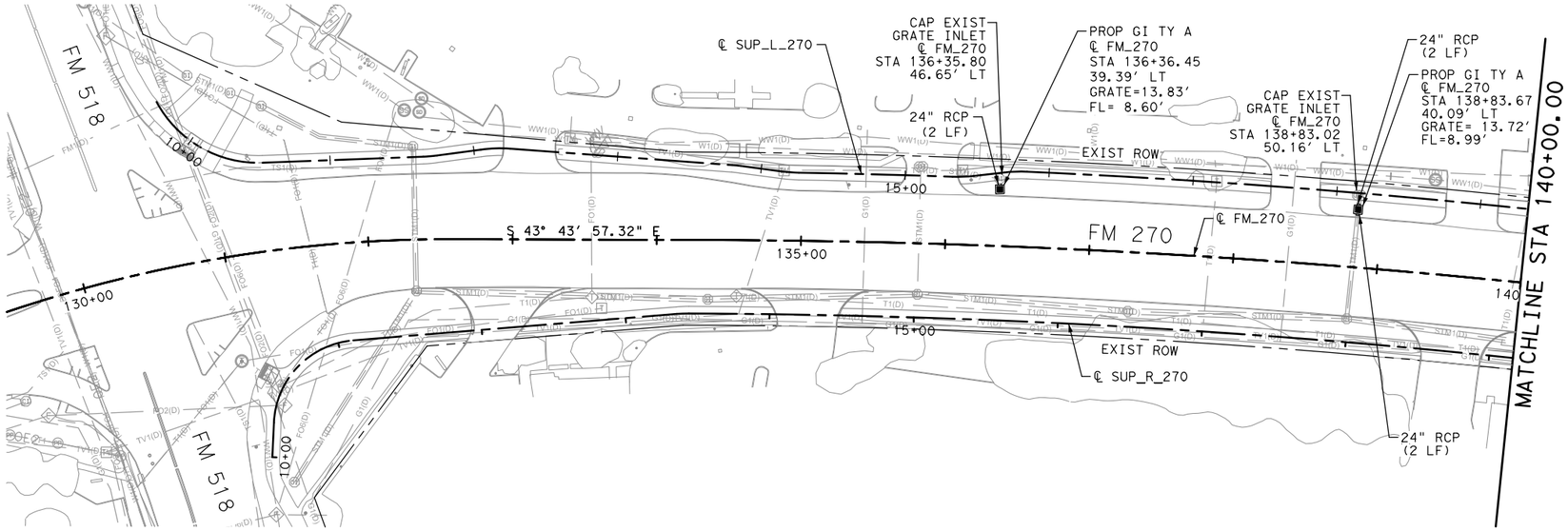

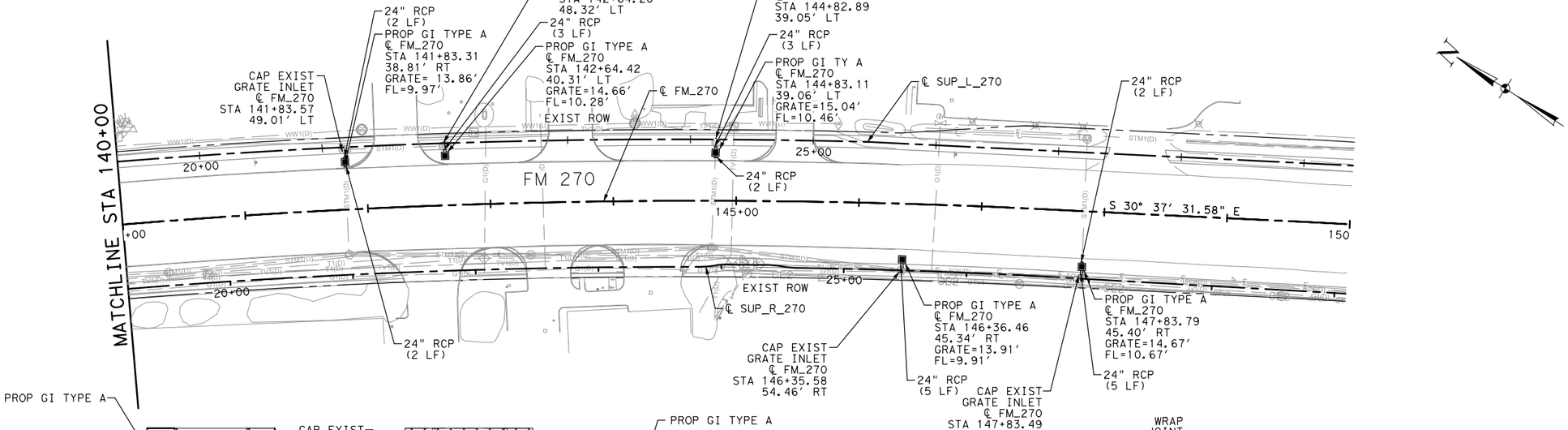

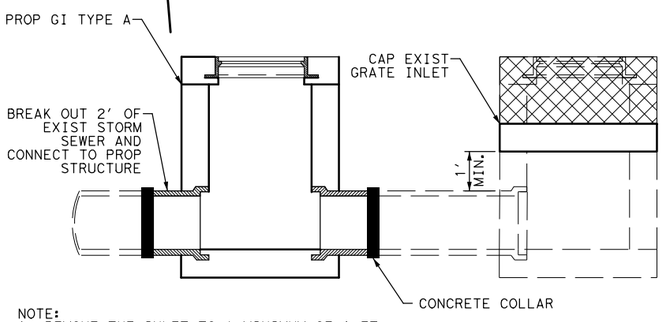

NOTE:
1. REMOVE THE INLET TO A MINIMUM OF 1 FT. BELOW SUBGRADE ELEVATION OR AS INDICATED ON THE PLANS. CAP AS SHOWN ON PLANS. SEE TXDOT SPECIFICATION ITEM 479
2. CONTRACTOR TO FIELD VERIFY ELEVATIONS OF THE EXISTING GRATE INLETS.

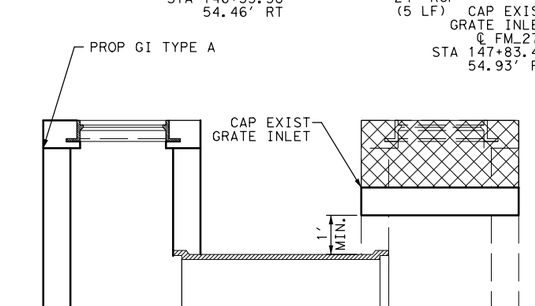

PROP GI TYPE A CONNECTION TO EXISTING STRUCTURE AND CAP DETAIL

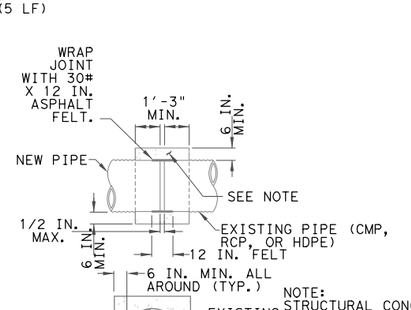

NOTE:
STRUCTURAL CONCRETE #4 BARS (GRADE) 12 IN O.C. EACH WAT - FOR COLLARS ONLY. WAIT A MINIMUM OF 24 HOURS AFTER PLACING CONCRETE TO BACKFILL.

CONCRETE COLLAR DETAIL

0' 25' 50' 100'

LEGEND:

- PROPOSED SAFETY END TREATMENT
- PROPOSED GRATE INLET
- PROPOSED MANHOLE
- STM1(D) EXISTING STM SEWER
- PROPOSED STM SEWER
- EXISTING DITCH
- PROPOSED DITCH FLOWLINE
- WETLAND

NO.	DATE	REVISION	APPROVED

STATE OF TEXAS
DAVID CORNYN
138892
LICENSED
PROFESSIONAL ENGINEER
8/2/2023

Texas Department of Transportation
©2023

JONES|CARTER
Texas Board of Professional Engineers Registration No. F-23290
4350 Lockhill Selma Rd, Suite 100 • San Antonio, Texas 78249 • 210.494.5511

FM 270 DRAINAGE PLAN AND PLAN

BEGIN TO STA 150+00

SHEET **01** OF **19**

DRAWN	FED.RD. DIV.NO.	FEDERAL AID PROJECT NO.		HIGHWAY NO.
AA	06			FM 270,ETC
DESIGNED	STATE	DIST.	COUNTY	SHEET NO.
JT	TEXAS	HOUSTON	GALVESTON	203
CHECKED	CONT.	SECT.	JOB	
NG	0912	73	215	
APPROVED				
DD				

PLOTDRIVER: LCBF.plt.cfg
PENTABLE: LCBF.tbl
DATE: 8/2/2023 1:27:43 AM USER: do
FILE: c:\bms\pwe101-01\daniel.ontiveros\dms22645\LCBF_270-DRNG_01.dgn

PENTABLE:LCBF.tbl
PLOTDRIVER:LCBF.pltcfg
DATE:8/2/2023 1:27:45 AM USER:do
FILE:c:\bms\pwe101-01\daniel.ontiveros\dms22645\LCBF_270-DRNG_02.dgn

HORZ 0′ 25′ 50′ 100′
VERT 0′ 5′ 10′

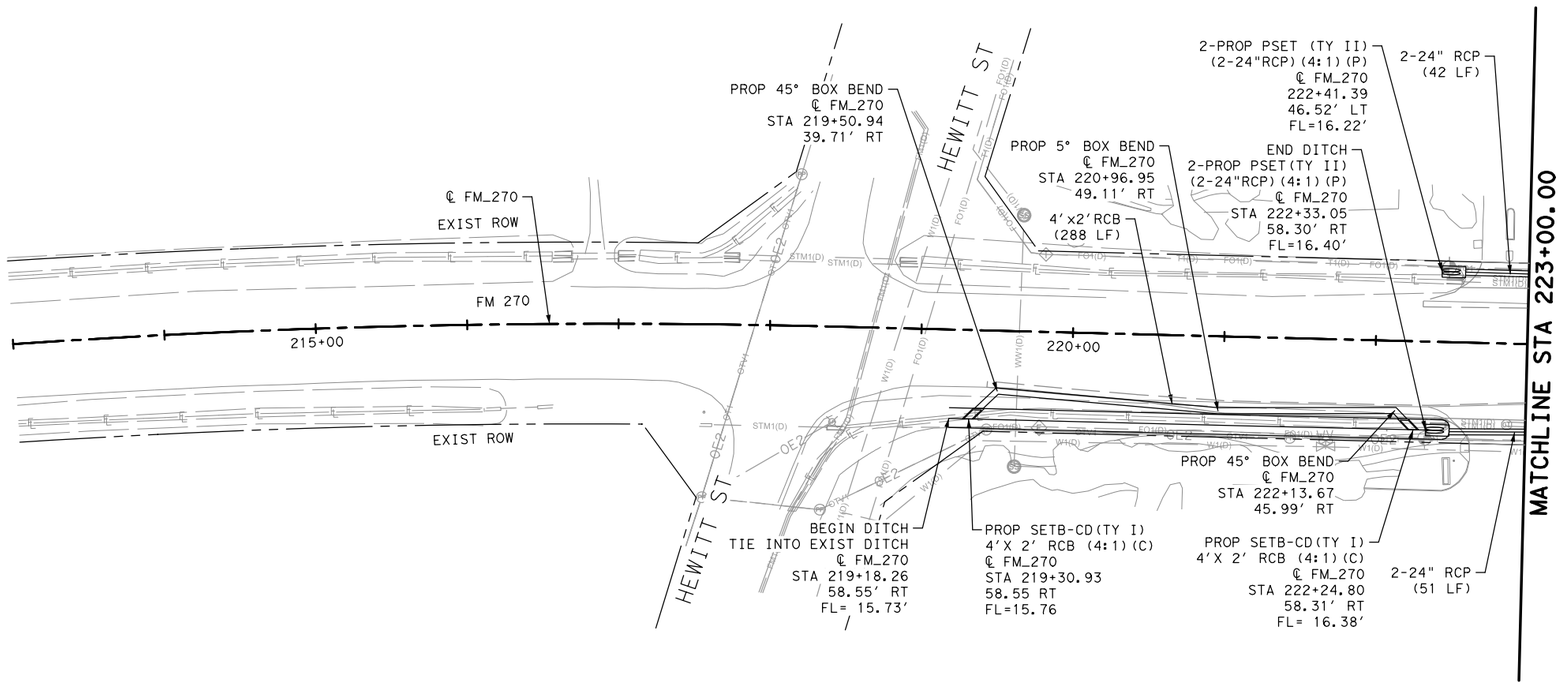

LEGEND:

- PROPOSED SAFETY END TREATMENT
- PROPOSED GRATE INLET
- PROPOSED MANHOLE
- STM1(D) — EXISTING STM SEWER
- PROPOSED STM SEWER
- EXISTING DITCH
- PROPOSED DITCH FLOWLINE
- WETLAND

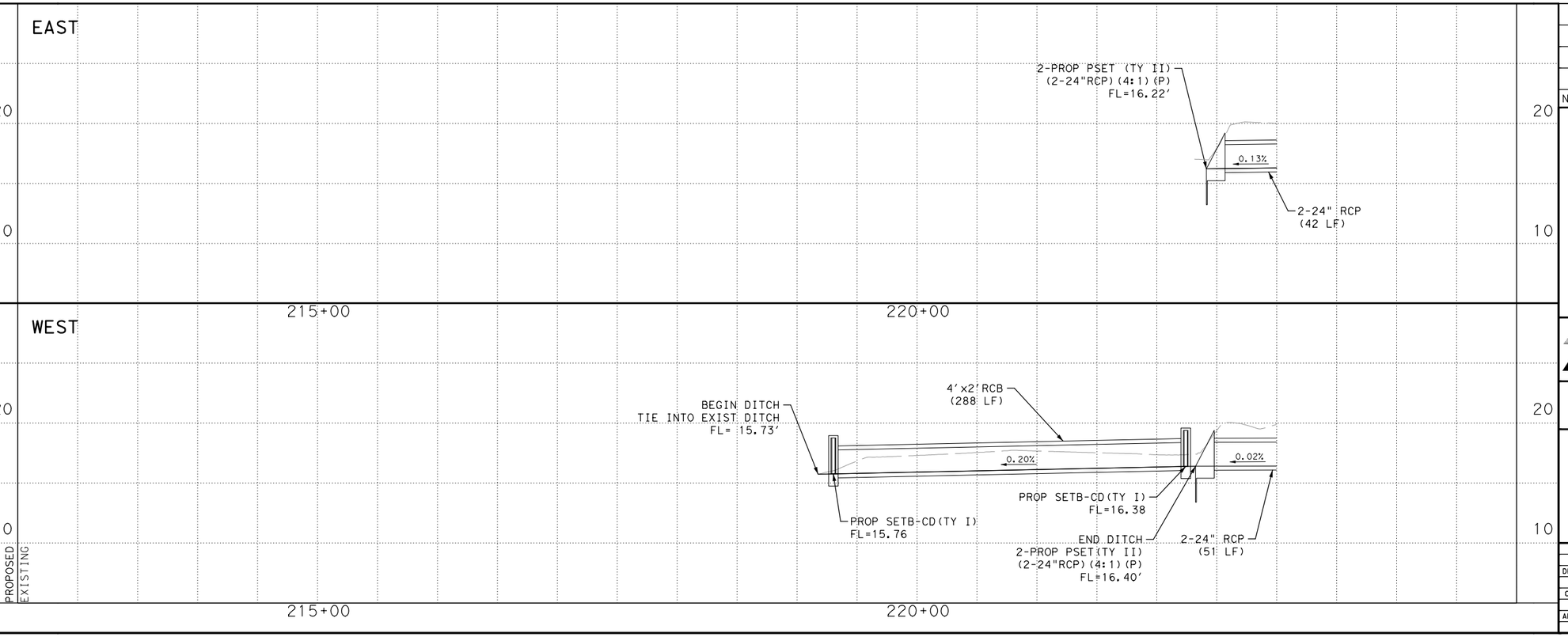

NO.	DATE	REVISION	APPROVED

STATE OF TEXAS
DAVID CORNYN
138892
LICENSED
PROFESSIONAL ENGINEER
8/2/2023

Texas Department of Transportation
©2023

JONES|CARTER
Texas Board of Professional Engineers Registration No. F-23290
4350 Lockhill Selma Rd, Suite 100• San Antonio, Texas 78249 •210.494.5511

FM 270
DRAINAGE
PLAN AND PROFILE
STA 213+00 TO STA 223+00

SHEET **02** OF **19**

DRAWN	FED.RD. DIV.NO.	FEDERAL AID PROJECT NO.		HIGHWAY NO.
CH	06			FM 270,ETC
DESIGNED	STATE	DIST.	COUNTY	SHEET NO.
DC	TEXAS	HOUSTON	GALVESTON	204
CHECKED	CONT.	SECT.	JOB	
NG	0912	73	215	
APPROVED				
DD				

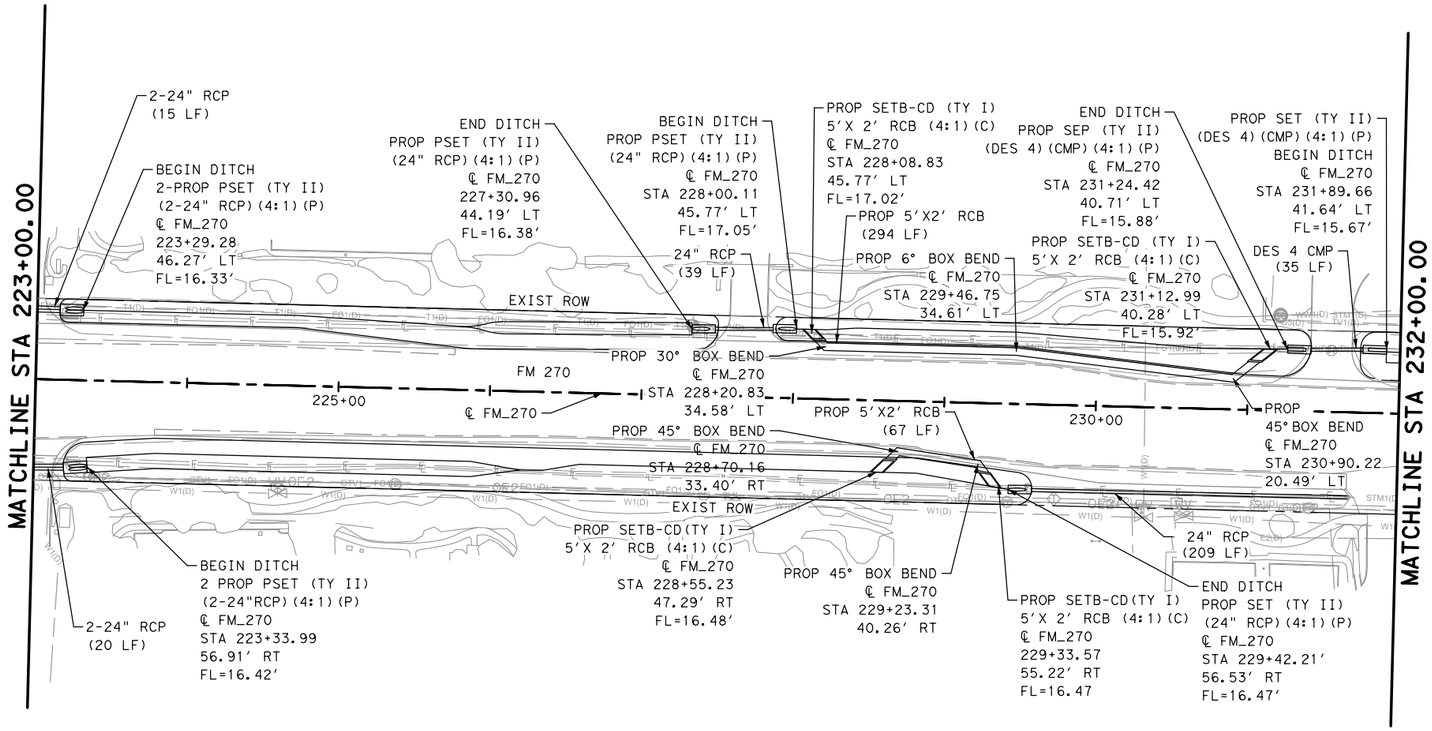

HORZ 0' 25' 50' 100'
VERT 0' 5' 10'

LEGEND:

- PROPOSED SAFETY END TREATMENT
- PROPOSED GRATE INLET
- PROPOSED MANHOLE
- STM1(D) — EXISTING STM SEWER
- PROPOSED STM SEWER
- EXISTING DITCH
- PROPOSED DITCH FLOWLINE
- WETLAND

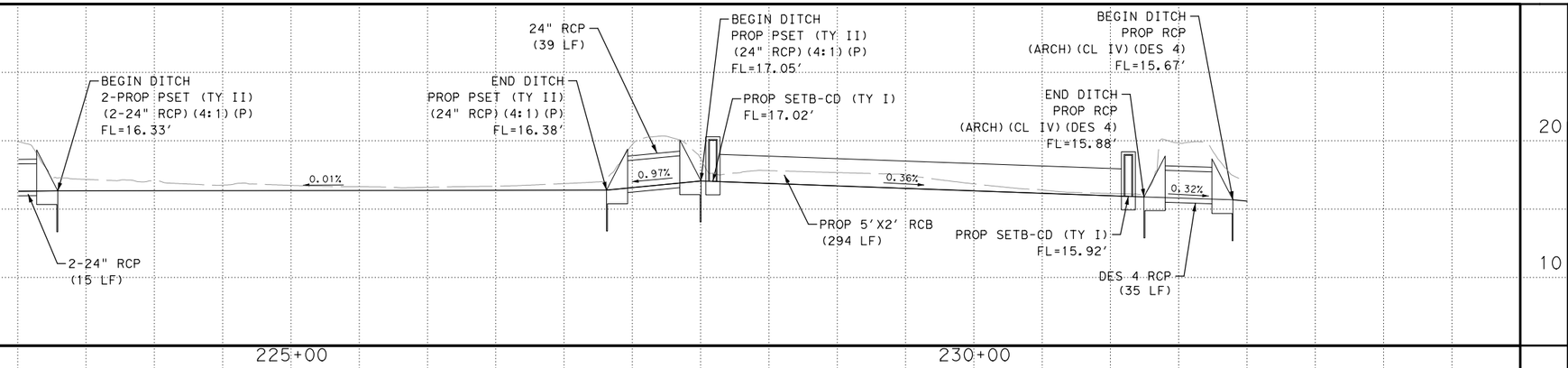

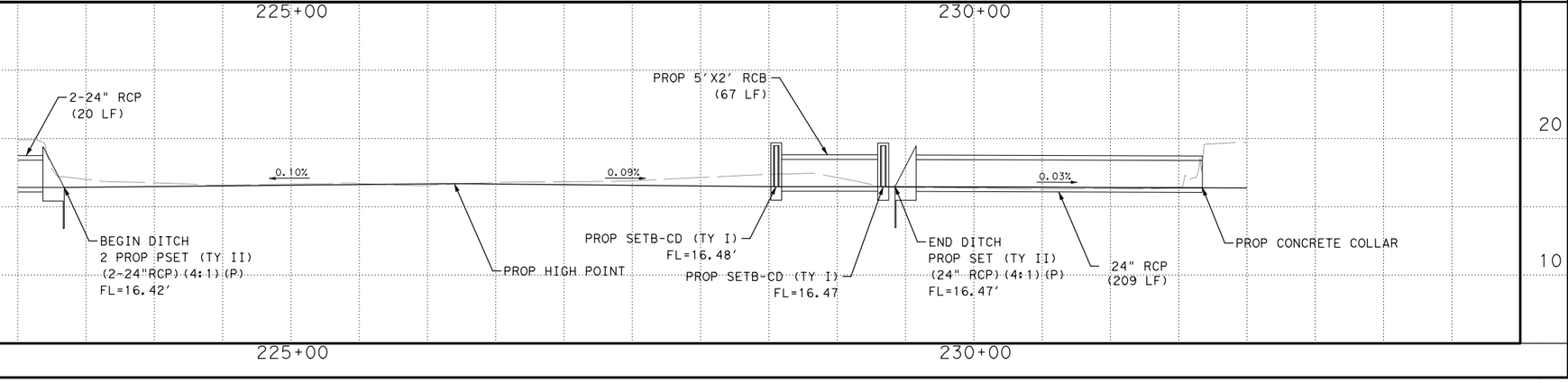

NO.	DATE	REVISION	APPROVED

STATE OF TEXAS
DAVID CORNYN
138892
LICENSED
PROFESSIONAL ENGINEER
8/2/2023

Texas Department of Transportation
©2023

JONES|CARTER
Texas Board of Professional Engineers Registration No. F-23290
4350 Lockhill Selma Rd, Suite 100• San Antonio, Texas 78249 •210.494.5511

FM 270
DRAINAGE
PLAN AND PROFILE
STA 223+00 TO STA 232+00

SHEET **03** OF **19**

DRAWN	FED. RD. DIV. NO.	FEDERAL AID PROJECT NO.		HIGHWAY NO.
CH	06			FM 270, ETC
DESIGNED	STATE	DIST.	COUNTY	SHEET NO.
DC	TEXAS	HOUSTON	GALVESTON	205
CHECKED	CONT.	SECT.	JOB	
NG	0912	73	215	
APPROVED				
DD				

PENTABLE: LCBF.tbl
PLOTDRIVER: LCBF.pltcfg
DATE: 8/2/2023 1:27:47 AM USER: do
FILE: c:\bms\pwe101-01\daniel.ontiveros\dms22645\LCBF_270-DRNG_03.dgn

PENTABLE:LCBF.tbl
PLOTDRIVER:LCBF.pltcfg
DATE:8/2/2023 1:27:49 AM USER:do
FILE:c:\bms\pwe101-01\daniel.ontiveros\dms22645\LCBF_270-DRNG_04.dgn

HORZ 0′ 25′ 50′ 100′
VERT 0′ 5′ 10′

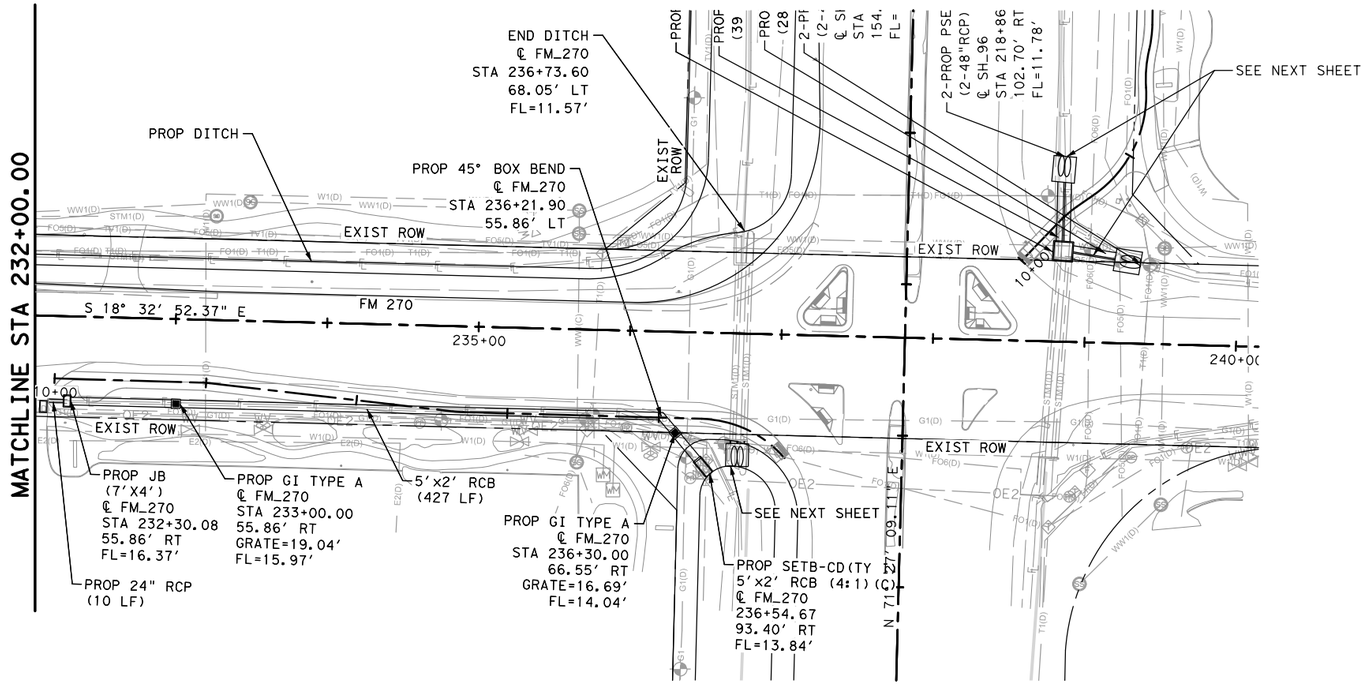

LEGEND:

- PROPOSED SAFETY END TREATMENT
- PROPOSED GRATE INLET
- PROPOSED MANHOLE
- STM1(D) — EXISTING STM SEWER
- PROPOSED STM SEWER
- EXISTING DITCH
- PROPOSED DITCH FLOWLINE
- WETLAND

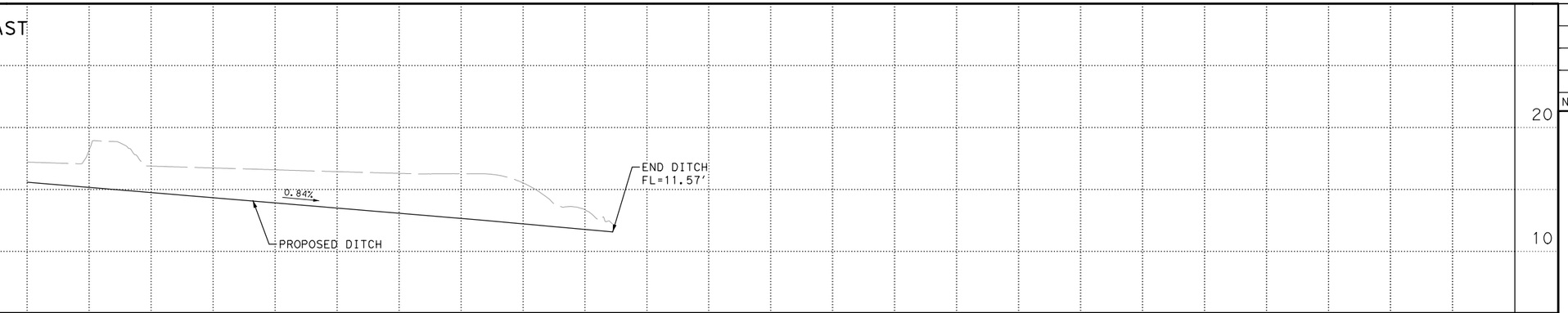

NO.	DATE	REVISION	APPROVED

STATE OF TEXAS
DAVID CORNYN
138892
LICENSED
PROFESSIONAL ENGINEER
8/2/2023

Texas Department of Transportation
©2023

JONES|CARTER
Texas Board of Professional Engineers Registration No. F-23290
4350 Lockhill Selma Rd, Suite 100• San Antonio, Texas 78249 •210.494.5511

FM 270
DRAINAGE
PLAN AND PROFILE
STA 232+00 TO SH 96

SHEET **04** OF **19**

DRAWN	FED.RD. DIV.NO.	FEDERAL AID PROJECT NO.		HIGHWAY NO.
CH	06			FM 270,ETC
DESIGNED	STATE	DIST.	COUNTY	SHEET NO.
DC	TEXAS	HOUSTON	GALVESTON	206
CHECKED	CONT.	SECT.	JOB	
NG	0912	73	215	
APPROVED				
DD				

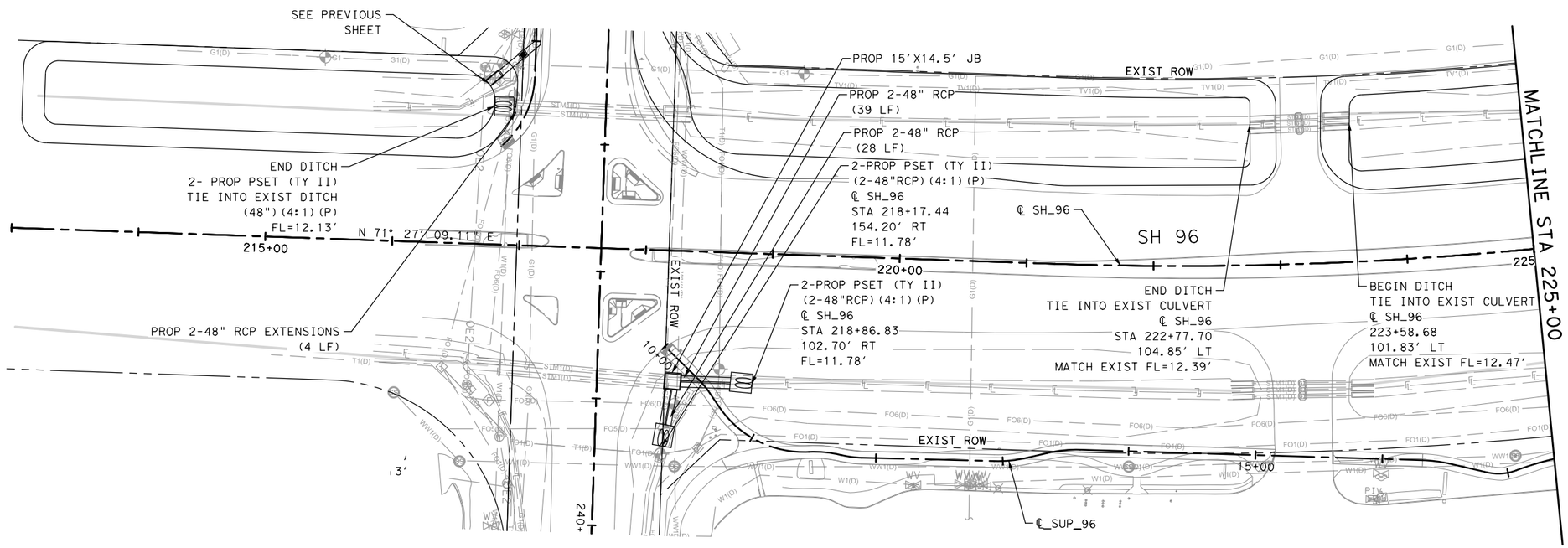

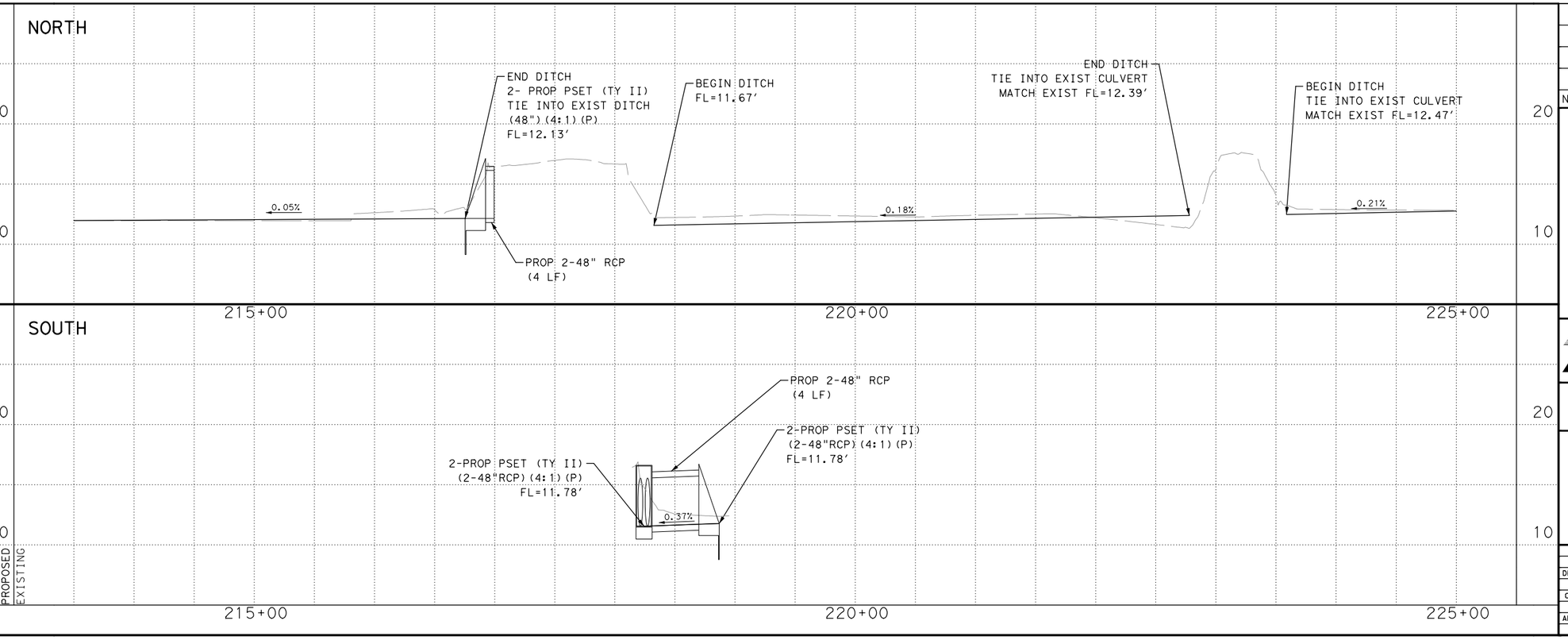

NO.	DATE	REVISION	APPROVED

STATE OF TEXAS
DAVID CORNYN
138892
LICENSED
PROFESSIONAL ENGINEER
8/2/2023

©2023

Texas Department of Transportation

JONES|CARTER
Texas Board of Professional Engineers Registration No. F-23290
4350 Lockhill Selma Rd, Suite 100• San Antonio, Texas 78249 •210.494.5511

SH 96
DRAINAGE
PLAN AND PROFILE
BEGIN TO STA 225+00

SHEET **05** OF **19**

DRAWN	FED. RD. DIV. NO.	FEDERAL AID PROJECT NO.		HIGHWAY NO.
CH	06			FM 270, ETC
DESIGNED	STATE	DIST.	COUNTY	SHEET NO.
DC	TEXAS	HOUSTON	GALVESTON	207
CHECKED	CONT.	SECT.	JOB	
NG	0912	73	215	
APPROVED				
DD				

PENTABLE: LCBF.tbl
PLOTDRIVER: LCBF.pltcfg
DATE: 8/2/2023 1:27:51 AM USER: do
FILE: c:\bms\pwe101-01\daniel.ontiveros\dms22645\LCBF_96-DRNG_05.dgn

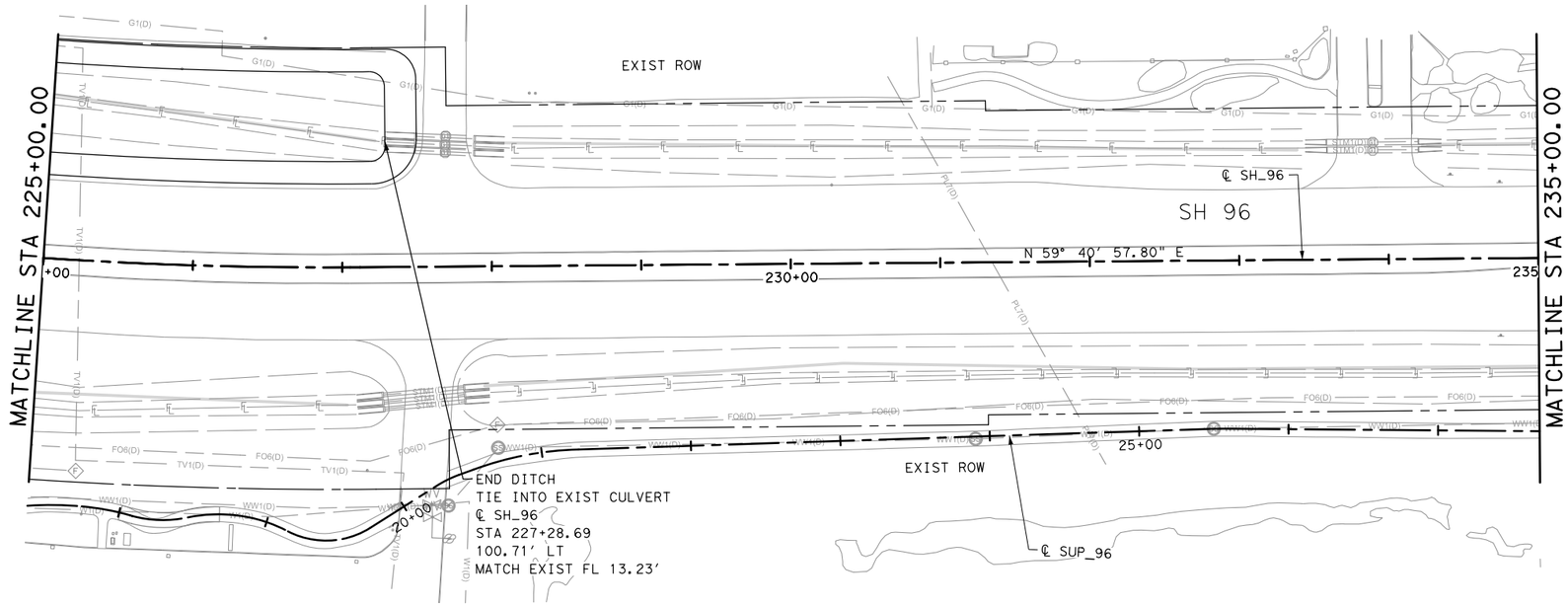

HORZ 0' 25' 50' 100'
VERT 0' 5' 10'

LEGEND:

- PROPOSED SAFETY END TREATMENT
- PROPOSED GRATE INLET
- PROPOSED MANHOLE
- STM1(D) — EXISTING STM SEWER
- PROPOSED STM SEWER
- EXISTING DITCH
- PROPOSED DITCH FLOWLINE
- WETLAND

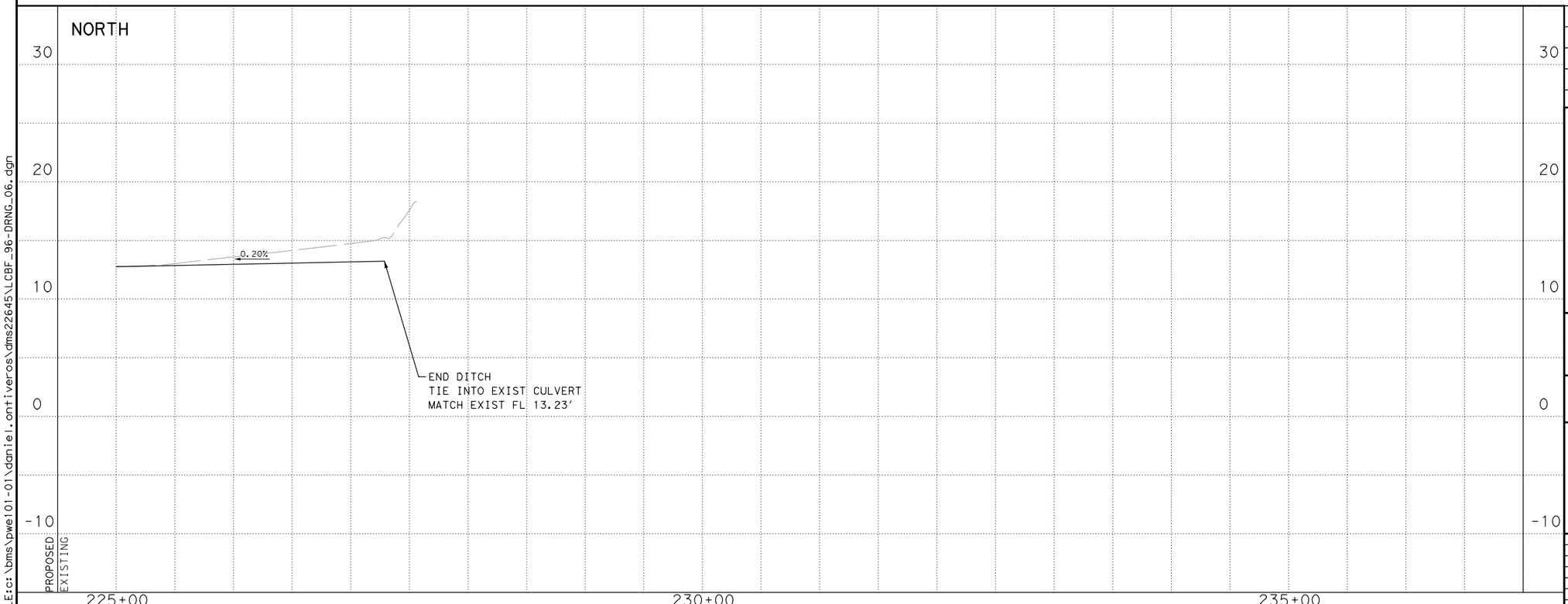

NO.	DATE	REVISION	APPROVED

STATE OF TEXAS
DAVID CORNYN
138892
LICENSED
PROFESSIONAL ENGINEER
8/2/2023

Texas Department of Transportation
©2023

JONES|CARTER
Texas Board of Professional Engineers Registration No. F-23290
4350 Lockhill Selma Rd, Suite 100• San Antonio, Texas 78249 •210.494.5511

SH 96
DRAINAGE
PLAN AND PROFILE
STA 225+00 TO STA 235+00

SHEET **06** OF **19**

DRAWN	FED. RD. DIV. NO.	FEDERAL AID PROJECT NO.		HIGHWAY NO.
CH	06			FM 270, ETC
DESIGNED	STATE	DIST.	COUNTY	SHEET NO.
DC	TEXAS	HOUSTON	GALVESTON	208
CHECKED	CONT.	SECT.	JOB	
NG	0912	73	215	
APPROVED				
DD				

PENTABLE:LCBF.tbl
PLOTDRIVER:LCBF.pltcfg
DATE:8/2/2023 1:27:53 AM USER:do
FILE:c:\bms\pwe101-01\daniel.ontiveros\dms22645\LCBF_96-DRNG_06.dgn

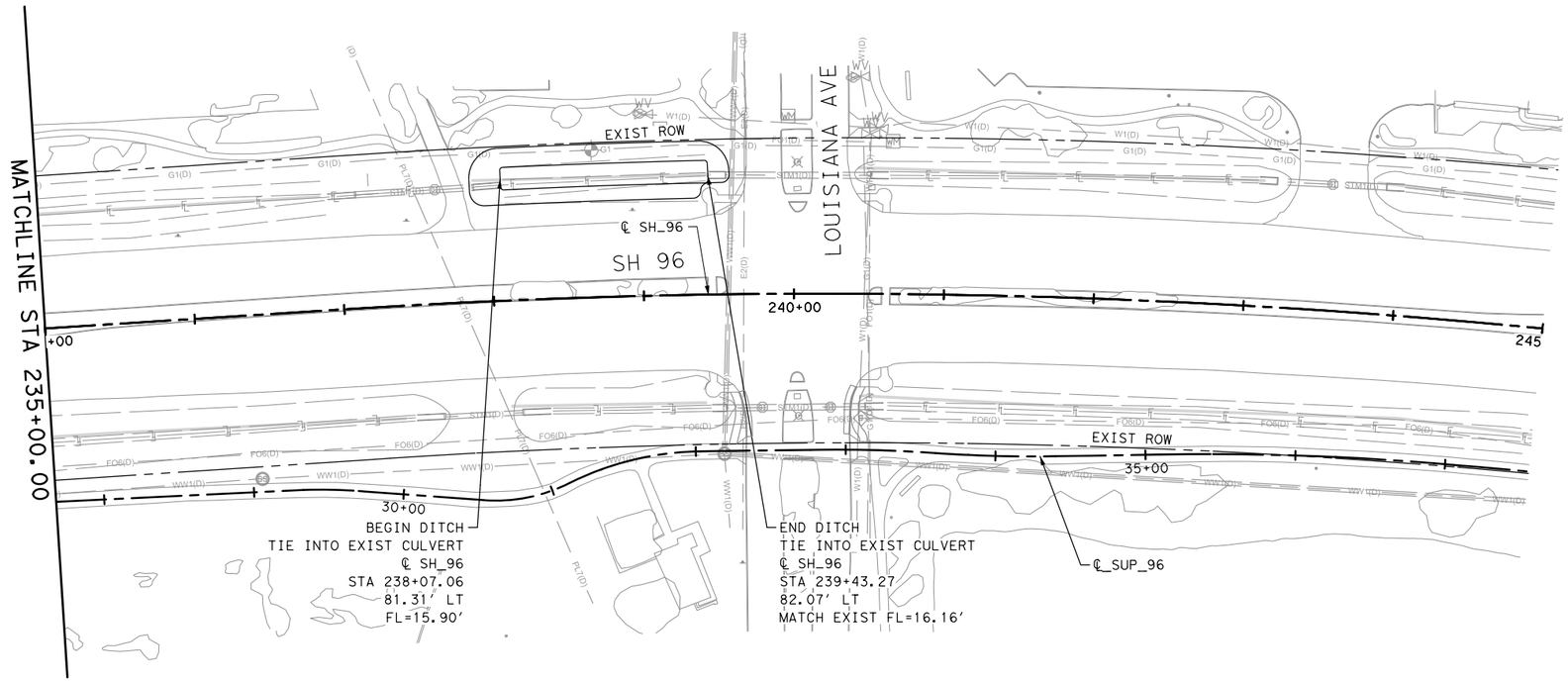

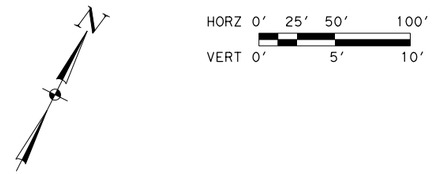

LEGEND:

- PROPOSED SAFETY END TREATMENT
- PROPOSED GRATE INLET
- PROPOSED MANHOLE
- STM1(D) — EXISTING STM SEWER
- PROPOSED STM SEWER
- EXISTING DITCH
- PROPOSED DITCH FLOWLINE
- WETLAND

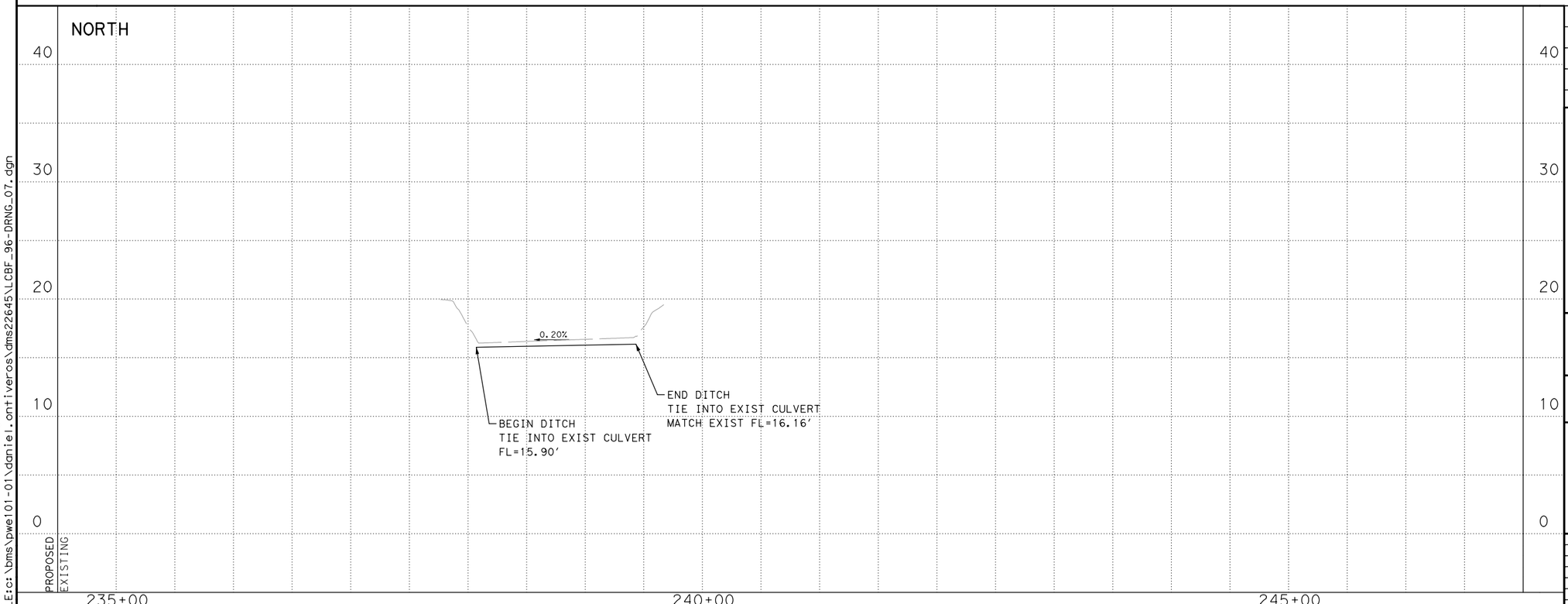

NO.	DATE	REVISION	APPROVED

STATE OF TEXAS
DAVID CORNYN
138892
LICENSED
PROFESSIONAL ENGINEER
8/2/2023

Texas Department of Transportation
©2023

JONES|CARTER
Texas Board of Professional Engineers Registration No. F-23290
4350 Lockhill Selma Rd, Suite 100• San Antonio, Texas 78249 •210.494.5511

SH 96
DRAINAGE
PLAN AND PROFILE
STA 235+00 TO STA 245+00

SHEET **07** OF **19**

DRAWN	FED.RD. DIV.NO.	FEDERAL AID PROJECT NO.		HIGHWAY NO.
CH	06			FM 270, ETC
DESIGNED	STATE	DIST.	COUNTY	SHEET NO.
DC	TEXAS	HOUSTON	GALVESTON	209
CHECKED	CONT.	SECT.	JOB	
NG	0912	73	215	
APPROVED				
DD				

PENTABLE:LCBF.tbl
PLOTDRIVER:LCBF.pltcfg
DATE:8/2/2023 1:27:54 AM USER:do
FILE:c:\bms\pwe101-01\daniel.ontiveros\dms22645\LCBF_96-DRNG_07.dgn

PENTABLE:LCBF.tbl
PLOTDRIVER:LCBF.pltcfg
DATE:8/2/2023 1:27:57 AM USER:do
FILE:c:\bms\pwe101-01\daniel.ontiveros\dms22645\LCBF_96-DRNG_08.dgn

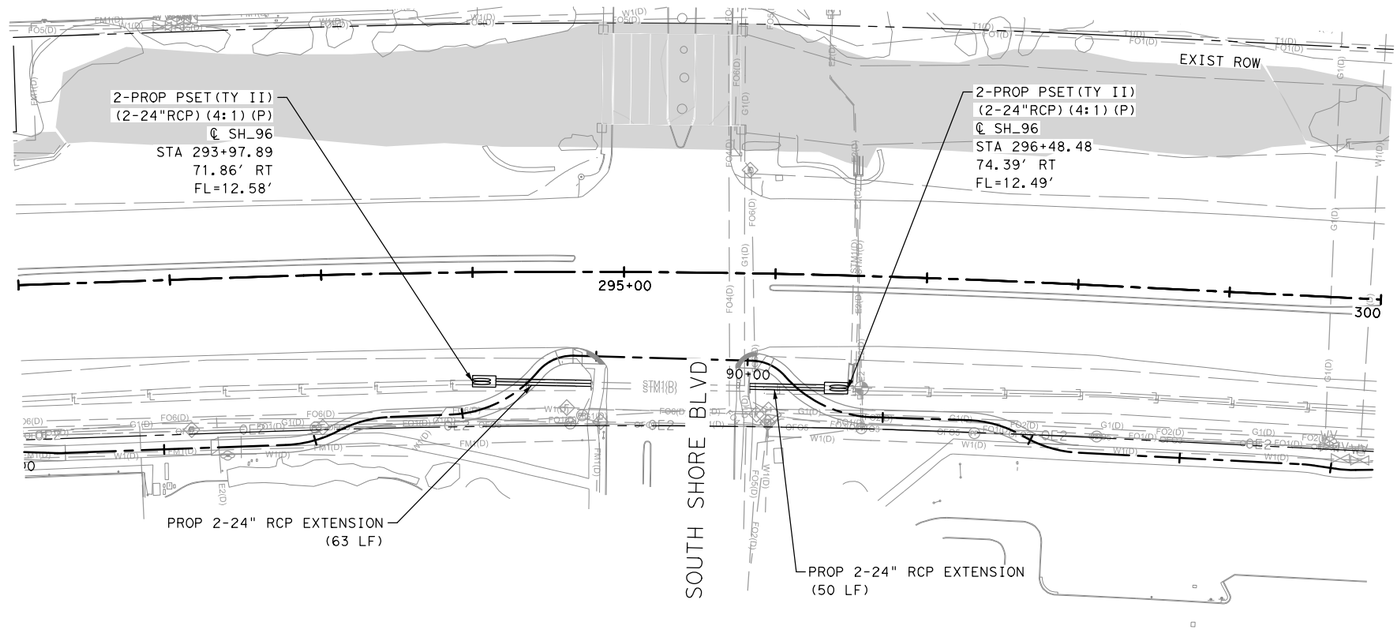

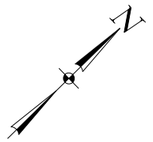

HORZ 0' 25' 50' 100'
VERT 0' 5' 10'

LEGEND:

- PROPOSED SAFETY END TREATMENT
- PROPOSED GRATE INLET
- PROPOSED MANHOLE
- STM1(D) — EXISTING STM SEWER
- PROPOSED STM SEWER
- EXISTING DITCH
- PROPOSED DITCH FLOWLINE
- WETLAND

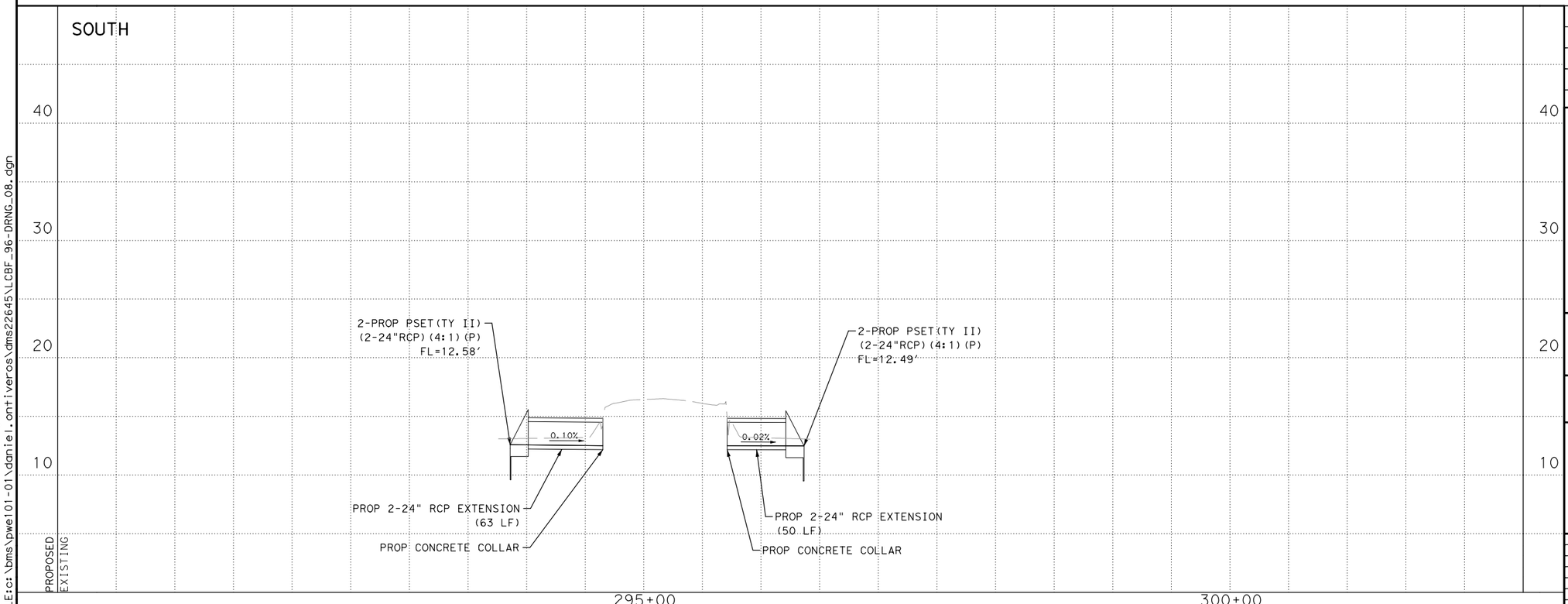

NO.	DATE	REVISION	APPROVED

STATE OF TEXAS
DAVID CORNYN
138892
LICENSED
PROFESSIONAL ENGINEER
8/2/2023

Texas Department of Transportation
©2023

JONES|CARTER
Texas Board of Professional Engineers Registration No. F-23290
4350 Lockhill Selma Rd, Suite 100•San Antonio, Texas 78249•210.494.5511

SH 96
DRAINAGE
PLAN AND PROFILE
STA 291+00 TO STA 300+00

SHEET **08** OF **19**

DRAWN	FED.RD. DIV.NO.	FEDERAL AID PROJECT NO.		HIGHWAY NO.
CH	06			FM 270, ETC
DESIGNED	STATE	DIST.	COUNTY	SHEET NO.
DC	TEXAS	HOUSTON	GALVESTON	210
CHECKED	CONT.	SECT.	JOB	
NG	0912	73	215	
APPROVED				
DD				

PENTABLE:LCBF.tbl
PLOTDRIVER:LCBF.pltcfg
DATE:8/2/2023 1:27:59 AM USER:do
FILE:c:\bms\pwe101-01\daniel.ontiveros\dms22645\LCBF_96-DRNG_09.dgn

HORZ 0′ 25′ 50′ 100′
VERT 0′ 5′ 10′

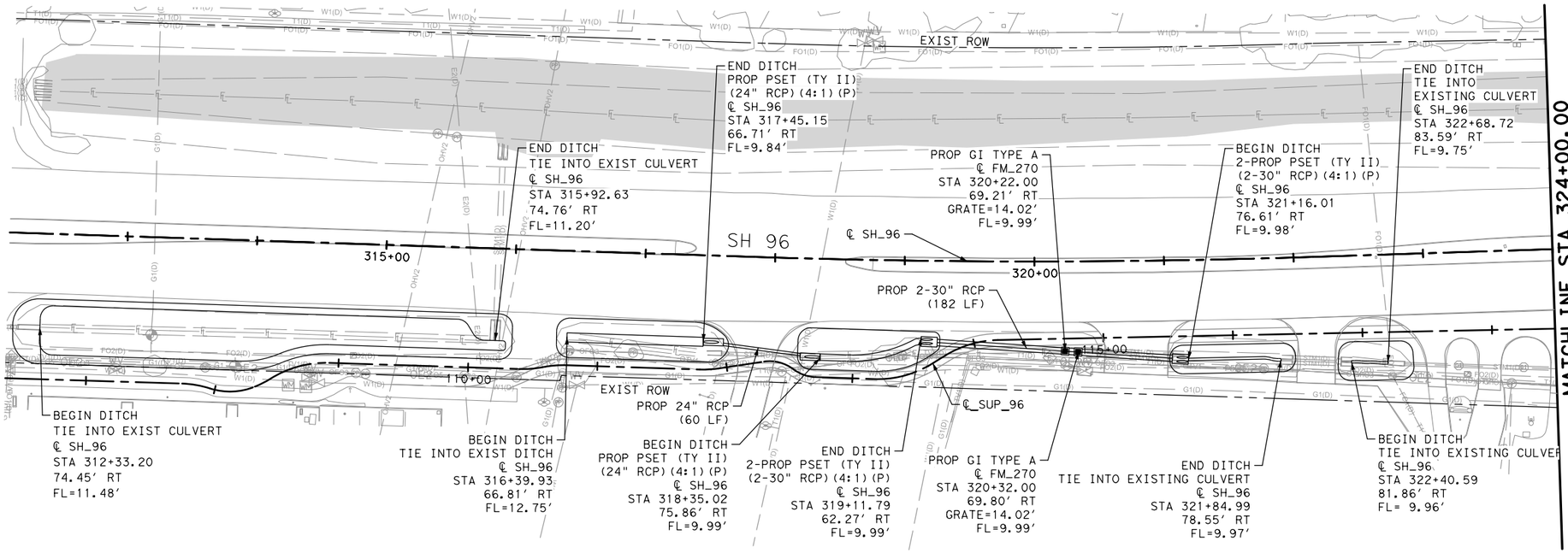

LEGEND:

- PROPOSED SAFETY END TREATMENT
- PROPOSED GRATE INLET
- PROPOSED MANHOLE
- STM1(D) — EXISTING STM SEWER
- PROPOSED STM SEWER
- EXISTING DITCH
- PROPOSED DITCH FLOWLINE
- WETLAND

SOUTH

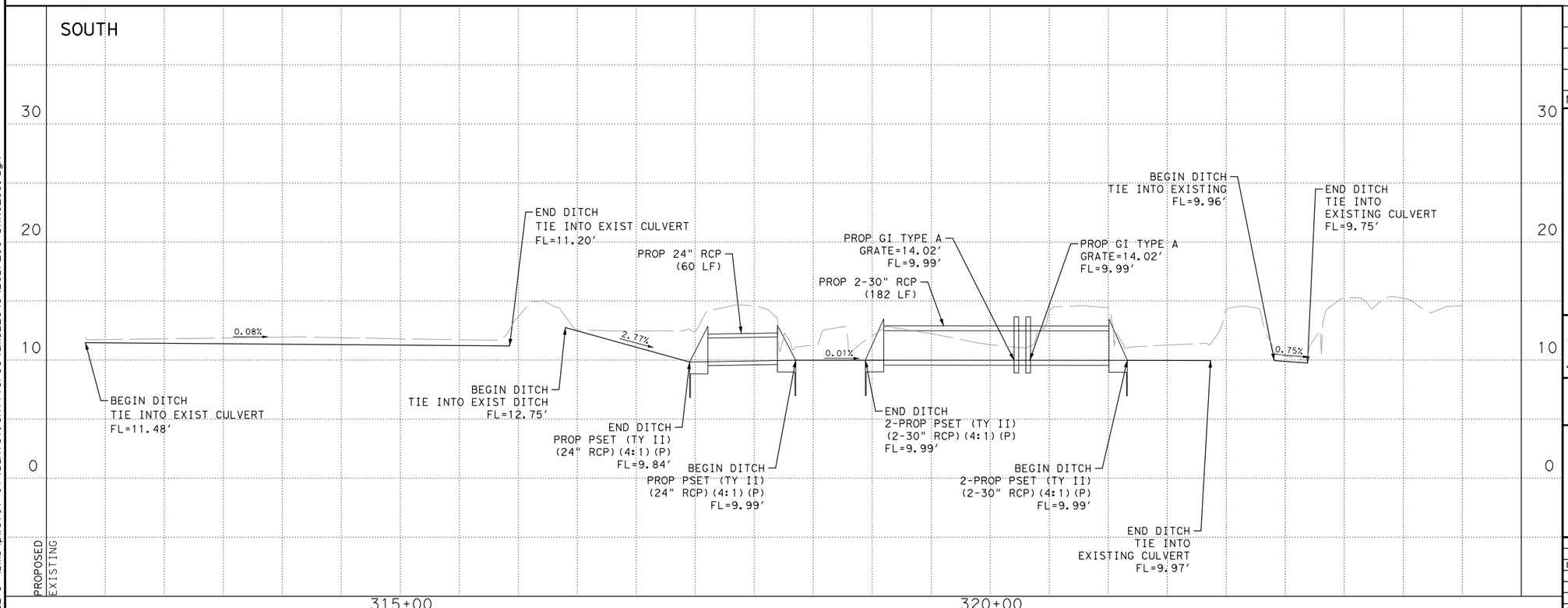

NO.	DATE	REVISION	APPROVED

STATE OF TEXAS
DAVID CORNYN
138892
LICENSED
PROFESSIONAL ENGINEER
8/2/2023

Texas Department of Transportation
©2023

JONES|CARTER
Texas Board of Professional Engineers Registration No. F-23290
4350 Lockhill Selma Rd, Suite 100• San Antonio, Texas 78249 •210.494.5511

SH 96
DRAINAGE
PLAN AND PROFILE
STA 312+10 TO STA 324+00

SHEET **09** OF **19**

DRAWN	FED.RD. DIV.NO.	FEDERAL AID PROJECT NO.		HIGHWAY NO.
CH	06			FM 270, ETC
DESIGNED	STATE	DIST.	COUNTY	SHEET NO.
DC	TEXAS	HOUSTON	GALVESTON	211
CHECKED	CONT.	SECT.	JOB	
NG	0912	73	215	
APPROVED				
DD				

PENTABLE:LCBF.tbl
PLOTDRIVER:LCBF.pltcfg
DATE:8/2/2023 1:28:01 AM USER:do
FILE:c:\bms\pwe101-01\daniel.ontiveros\dms22645\LCBF_96-DRNG_10.dgn

HORZ 0′ 25′ 50′ 100′
VERT 0′ 5′ 10′

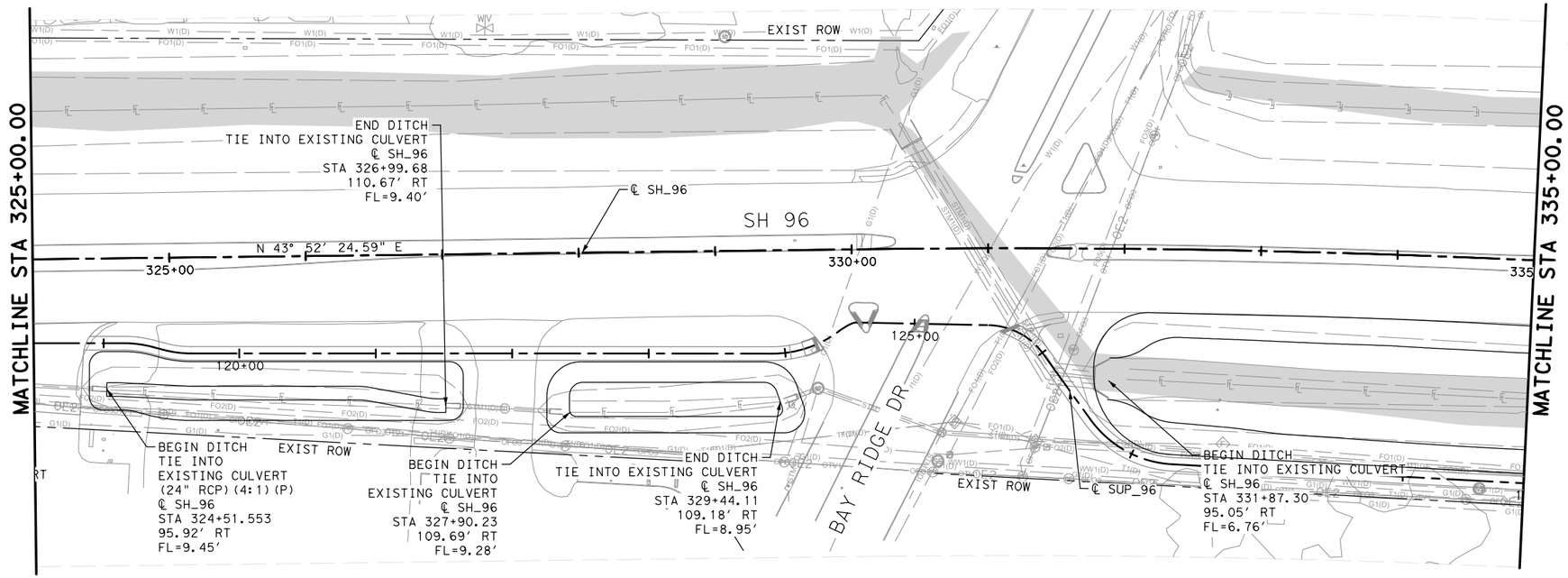

LEGEND:

- PROPOSED SAFETY END TREATMENT
- PROPOSED GRATE INLET
- PROPOSED MANHOLE
- STM1(D) — EXISTING STM SEWER
- PROPOSED STM SEWER
- EXISTING DITCH
- PROPOSED DITCH FLOWLINE
- WETLAND

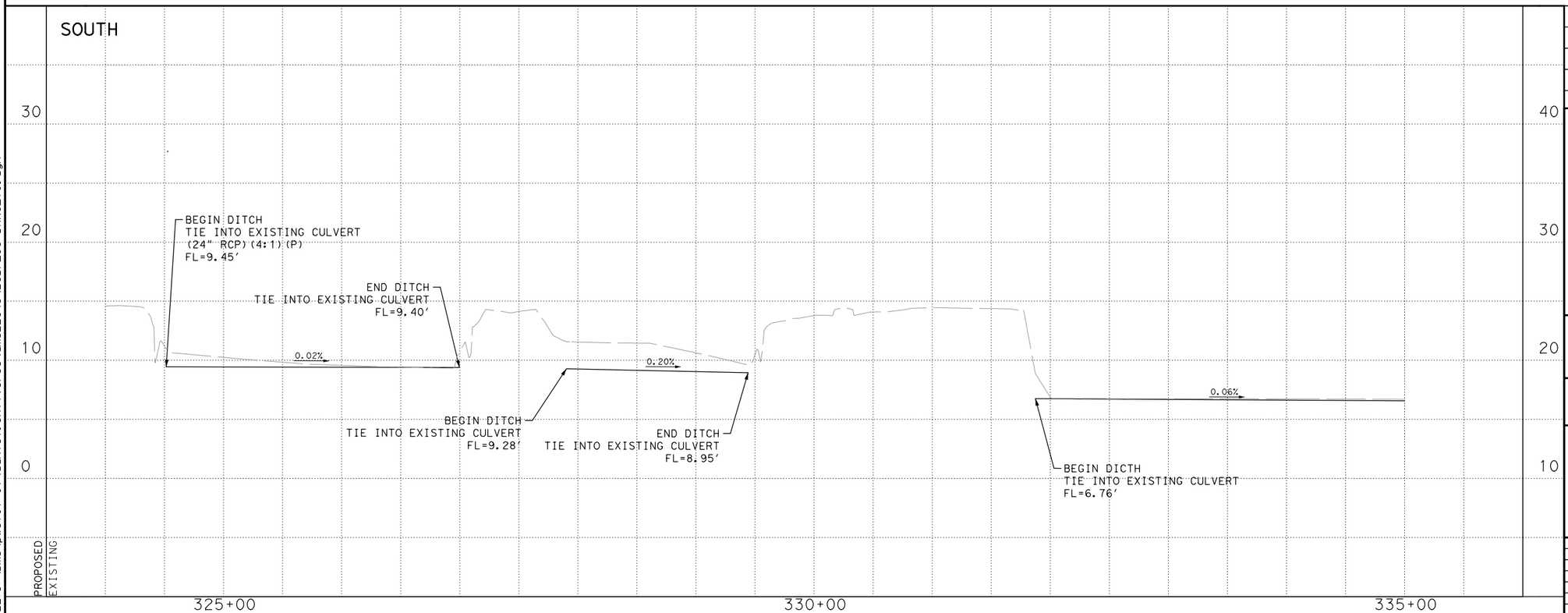

NO.	DATE	REVISION	APPROVED

STATE OF TEXAS
DAVID CORNYN
138892
LICENSED
PROFESSIONAL ENGINEER
8/2/2023

Texas Department of Transportation
©2023

JONES|CARTER
Texas Board of Professional Engineers Registration No. F-23290
4350 Lockhill Selma Rd, Suite 100• San Antonio, Texas 78249 •210.494.5511

SH 96
DRAINAGE
PLAN AND PROFILE
STA 324+00 TO STA 335+00

SHEET **10** OF **19**

DRAWN	FED.RD. DIV.NO.	FEDERAL AID PROJECT NO.		HIGHWAY NO.
CH	06			FM 270, ETC
DESIGNED	STATE	DIST.	COUNTY	SHEET NO.
DC	TEXAS	HOUSTON	GALVESTON	212
CHECKED	CONT.	SECT.	JOB	
NG	0912	73	215	
APPROVED				
DD				

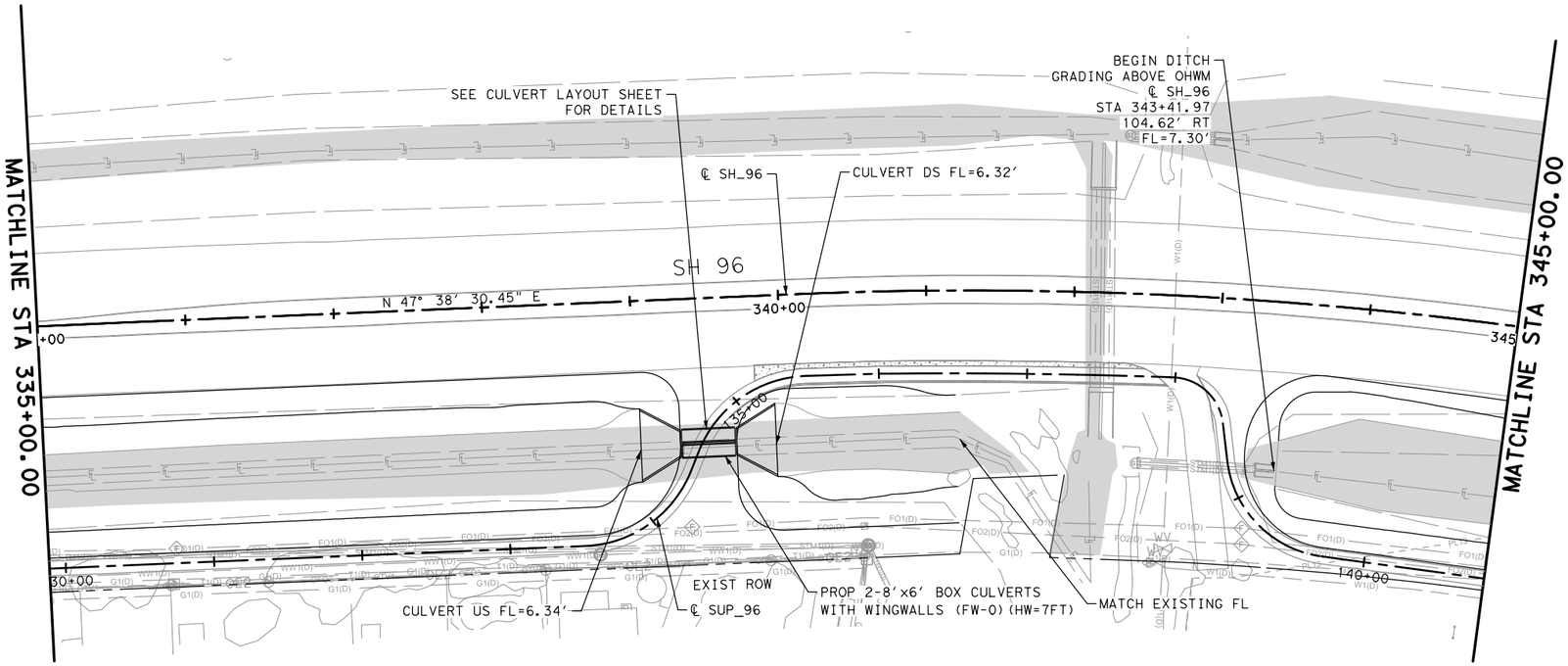

HORZ 0' 25' 50' 100'
VERT 0' 5' 10'

LEGEND:

- PROPOSED SAFETY END TREATMENT
- PROPOSED GRATE INLET
- PROPOSED MANHOLE
- STM1(D) — EXISTING STM SEWER
- PROPOSED STM SEWER
- EXISTING DITCH
- PROPOSED DITCH FLOWLINE
- WETLAND

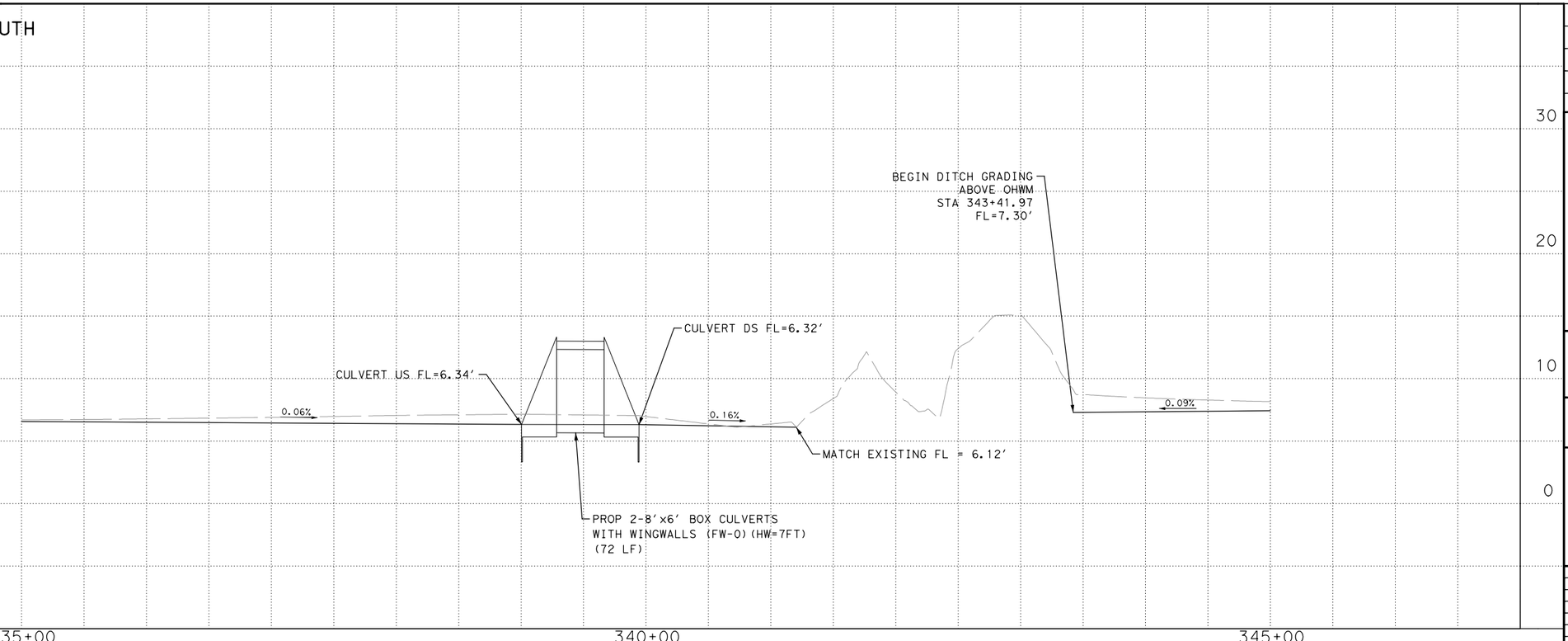

NO.	DATE	REVISION	APPROVED

STATE OF TEXAS
DAVID CORNYN
138892
LICENSED
PROFESSIONAL ENGINEER
8/2/2023

Texas Department of Transportation
©2023

JONES|CARTER
Texas Board of Professional Engineers Registration No. F-23290
4350 Lockhill Selma Rd, Suite 100• San Antonio, Texas 78249 •210.494.5511

SH 96
DRAINAGE
PLAN AND PROFILE
STA 335+00 TO STA 345+00

SHEET **11** OF **19**

DRAWN	FED.RD. DIV.NO.	FEDERAL AID PROJECT NO.		HIGHWAY NO.
CH	06			FM 270, ETC
DESIGNED	STATE	DIST.	COUNTY	SHEET NO.
DC	TEXAS	HOUSTON	GALVESTON	213
CHECKED	CONT.	SECT.	JOB	
NG	0912	73	215	
APPROVED				
DD				

PENTABLE:LCBF.tbl
PLOTDRIVER:LCBF.pltcfg
USER:do
DATE:8/2/2023 1:28:04 AM
FILE:c:\bms\pwe101-01\daniel.ontiveros\dms22645\LCBF_96-DRNG_11.dgn

PLOTDRIVER: LCBF.pltcfg
PENTABLE: LCBF.tbl
USER: do
DATE: 8/2/2023 1:28:09 AM
FILE: c:\bms\pwe101-01\daniel.ontiveros\dms22645\LCBF_96-DRNG_12.dgn

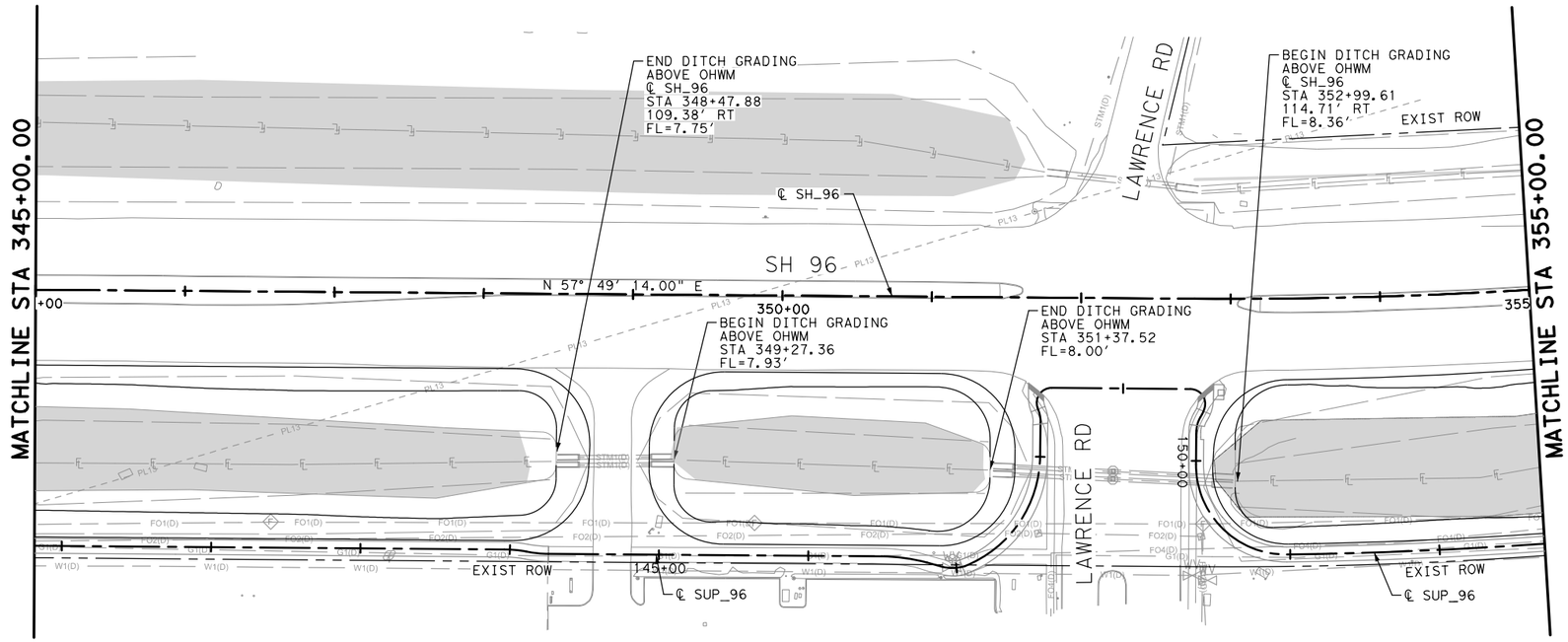

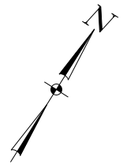

HORZ 0' 25' 50' 100'
VERT 0' 5' 10'

LEGEND:

- PROPOSED SAFETY END TREATMENT
- PROPOSED GRATE INLET
- PROPOSED MANHOLE
- STM1(D) — EXISTING STM SEWER
- PROPOSED STM SEWER
- EXISTING DITCH
- PROPOSED DITCH FLOWLINE
- WETLAND

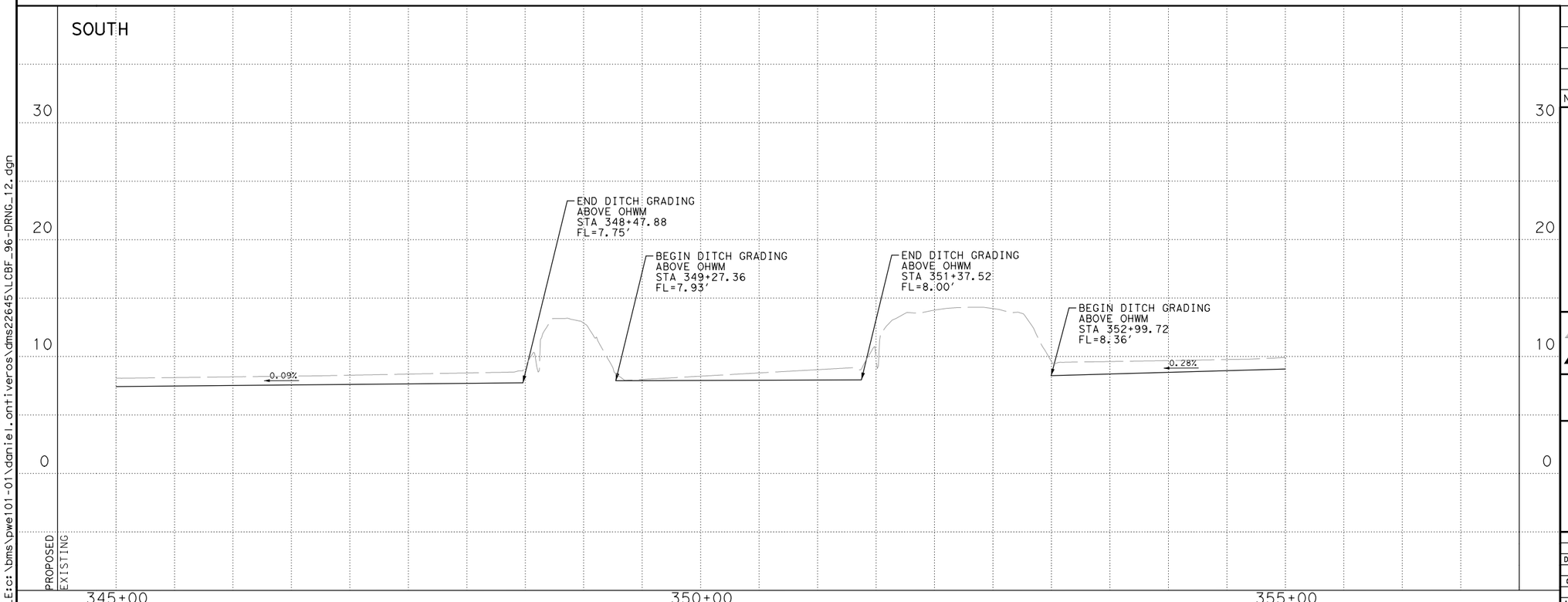

NO.	DATE	REVISION	APPROVED

STATE OF TEXAS
DAVID CORNYN
138892
LICENSED
PROFESSIONAL ENGINEER
8/2/2023

Texas Department of Transportation
©2023

JONES|CARTER
Texas Board of Professional Engineers Registration No. F-23290
4350 Lockhill Selma Rd, Suite 100•San Antonio, Texas 78249•210.494.5511

SH 96
DRAINAGE
PLAN AND PROFILE
STA 345+00 TO STA 355+00

SHEET **12** OF **19**

DRAWN	FED. RD. DIV. NO.	FEDERAL AID PROJECT NO.		HIGHWAY NO.
CH	06			FM 270, ETC
DESIGNED	STATE	DIST.	COUNTY	SHEET NO.
DC	TEXAS	HOUSTON	GALVESTON	214
CHECKED	CONT.	SECT.	JOB	
NG	0912	73	215	
APPROVED				
DD				

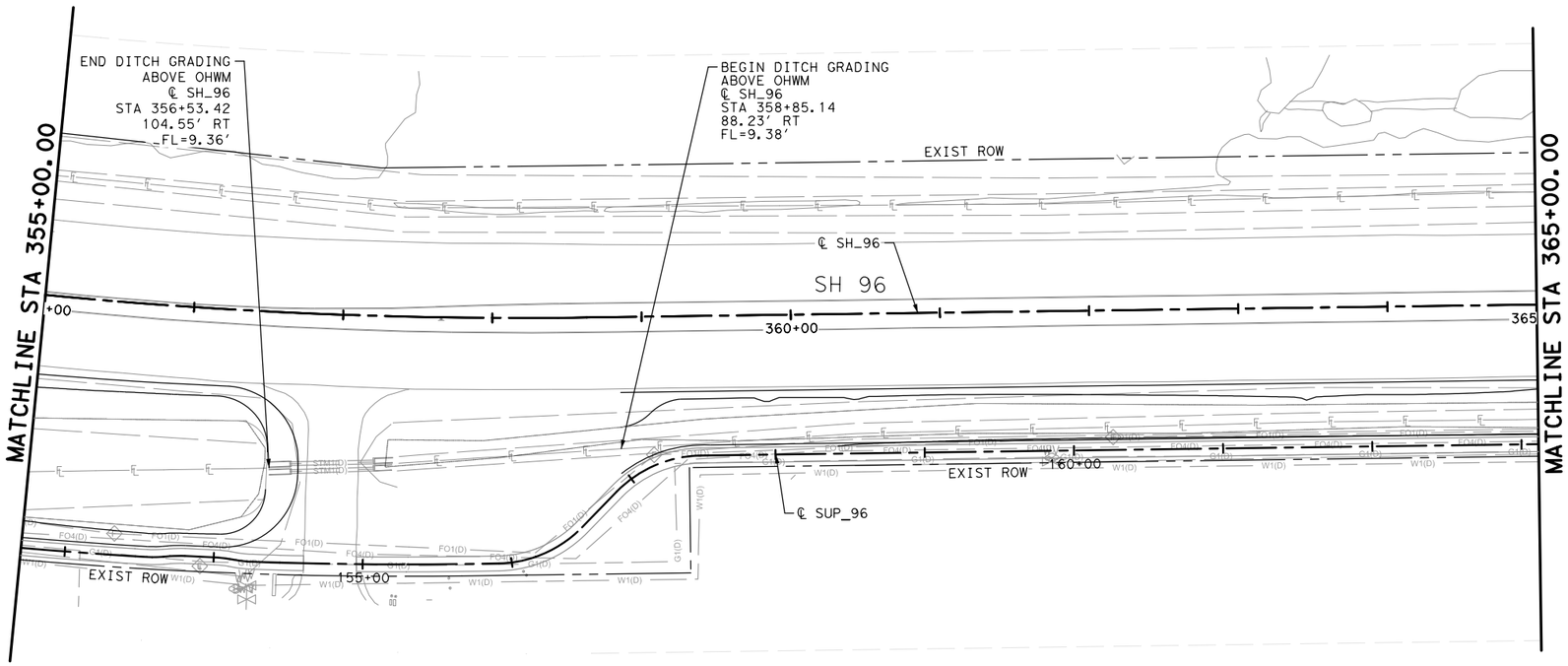

HORZ 0' 25' 50' 100'
VERT 0' 5' 10'

LEGEND:

- PROPOSED SAFETY END TREATMENT
- PROPOSED GRATE INLET
- PROPOSED MANHOLE
- STM1(D) — EXISTING STM SEWER
- PROPOSED STM SEWER
- EXISTING DITCH
- PROPOSED DITCH FLOWLINE
- WETLAND

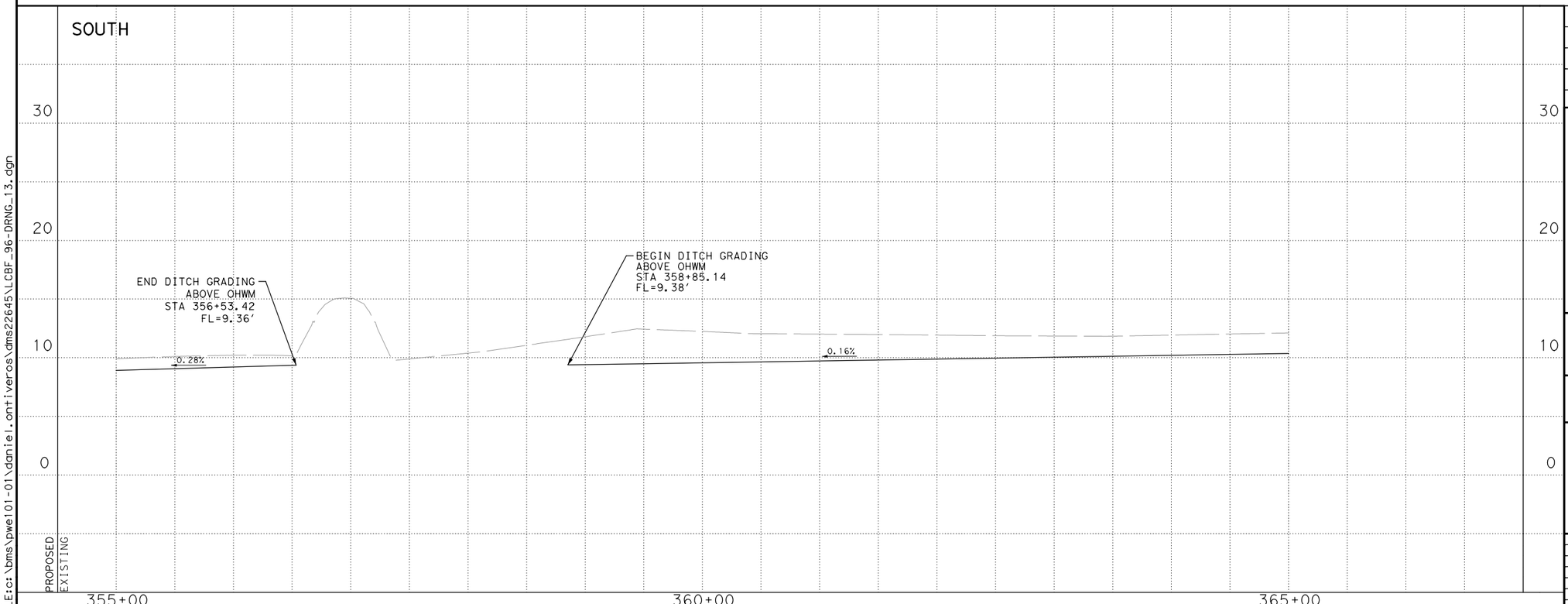

NO.	DATE	REVISION	APPROVED

STATE OF TEXAS
DAVID CORNYN
138892
LICENSED
PROFESSIONAL ENGINEER
8/2/2023

Texas Department of Transportation
©2023

JONES|CARTER
Texas Board of Professional Engineers Registration No. F-23290
4350 Lockhill Selma Rd, Suite 100• San Antonio, Texas 78249 •210.494.5511

SH 96
DRAINAGE
PLAN AND PROFILE
STA 355+00 TO STA 365+00

SHEET **13** OF **19**

DRAWN	FED. RD. DIV. NO.	FEDERAL AID PROJECT NO.		HIGHWAY NO.
CH	06			FM 270, ETC
DESIGNED	STATE	DIST.	COUNTY	SHEET NO.
DC	TEXAS	HOUSTON	GALVESTON	215
CHECKED	CONT.	SECT.	JOB	
NG	0912	73	215	
APPROVED				
DD				

PLOTDRIVER: LCBF.pltcfg PENTABLE: LCBF.tbl
DATE:8/2/2023 1:28:10 AM USER:do
FILE:c:\bms\pwe101-01\daniel.ontiveros\dms22645\LCBF_96-DRNG_13.dgn

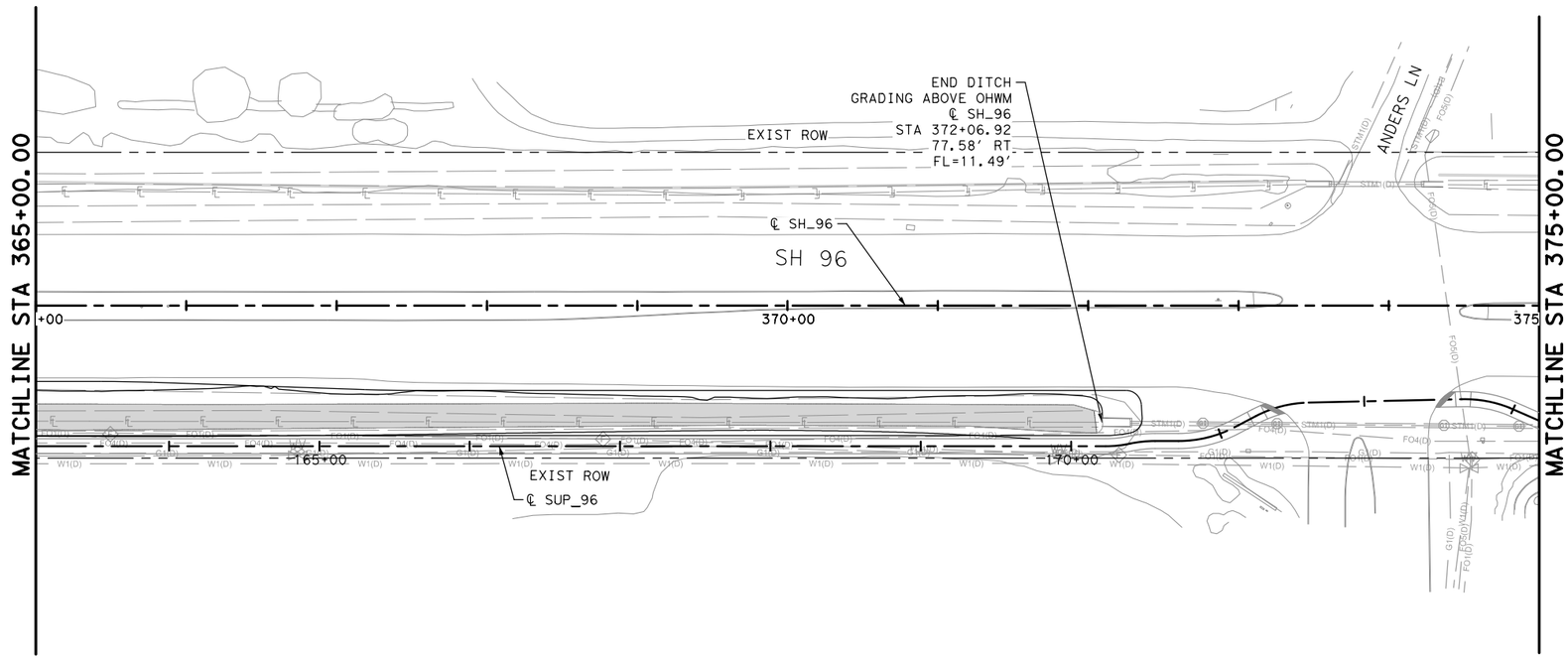

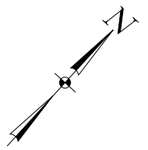

HORZ 0' 25' 50' 100'
VERT 0' 5' 10'

LEGEND:

- PROPOSED SAFETY END TREATMENT
- PROPOSED GRATE INLET
- PROPOSED MANHOLE
- STM1(D) — EXISTING STM SEWER
- PROPOSED STM SEWER
- EXISTING DITCH
- PROPOSED DITCH FLOWLINE
- WETLAND

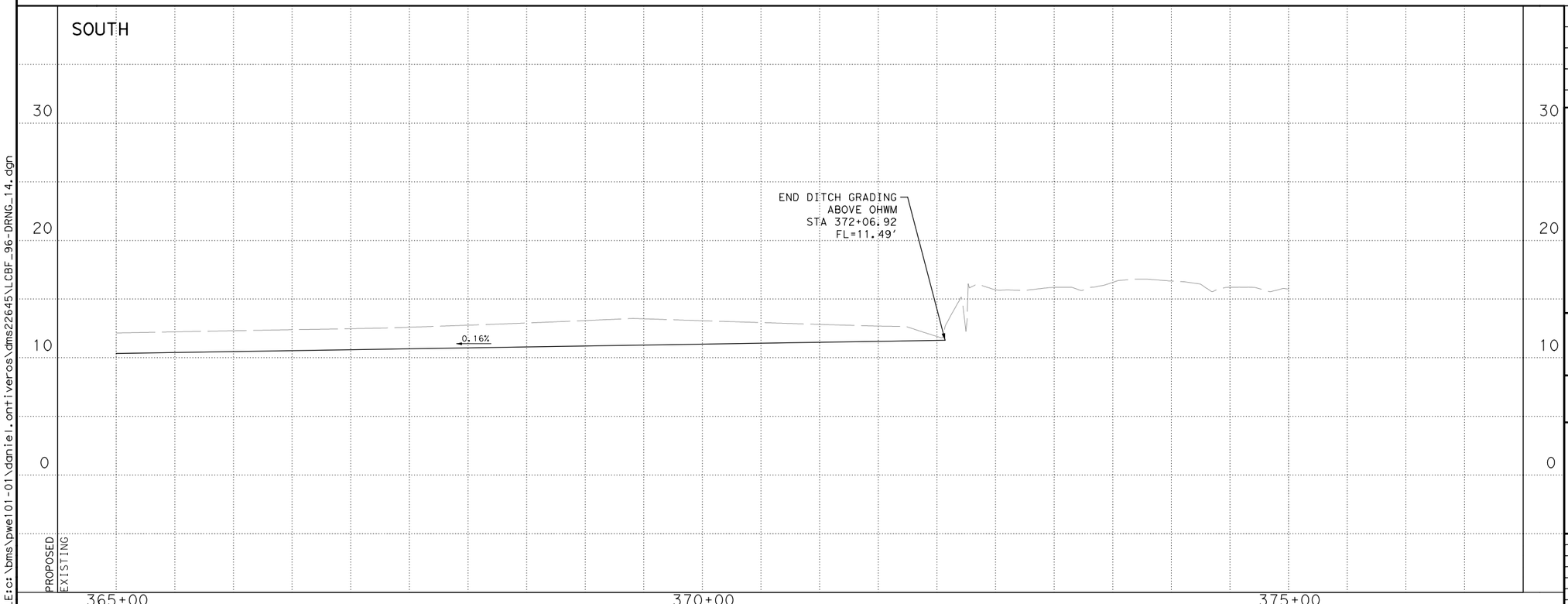

NO.	DATE	REVISION	APPROVED

STATE OF TEXAS
DAVID CORNYN
138892
LICENSED
PROFESSIONAL ENGINEER
8/2/2023

Texas Department of Transportation
©2023

JONES|CARTER
Texas Board of Professional Engineers Registration No. F-23290
4350 Lockhill Selma Rd, Suite 100• San Antonio, Texas 78249 •210.494.5511

SH 96
DRAINAGE
PLAN AND PROFILE
STA 365+00 TO STA 375+00

SHEET **14** OF **19**

DRAWN	FED. RD. DIV. NO.	FEDERAL AID PROJECT NO.		HIGHWAY NO.
CH	06			FM 270, ETC
DESIGNED	STATE	DIST.	COUNTY	SHEET NO.
DC	TEXAS	HOUSTON	GALVESTON	216
CHECKED	CONT.	SECT.	JOB	
NG	0912	73	215	
APPROVED				
DD				

PENTABLE:LCBF.tbl
PLOTDRIVER:LCBF.pltcfg
USER:do
DATE:8/2/2023 1:28:16 AM
FILE:c:\bms\pwe101-01\daniel.ontiveros\dms22645\LCBF_96-DRNG_14.dgn

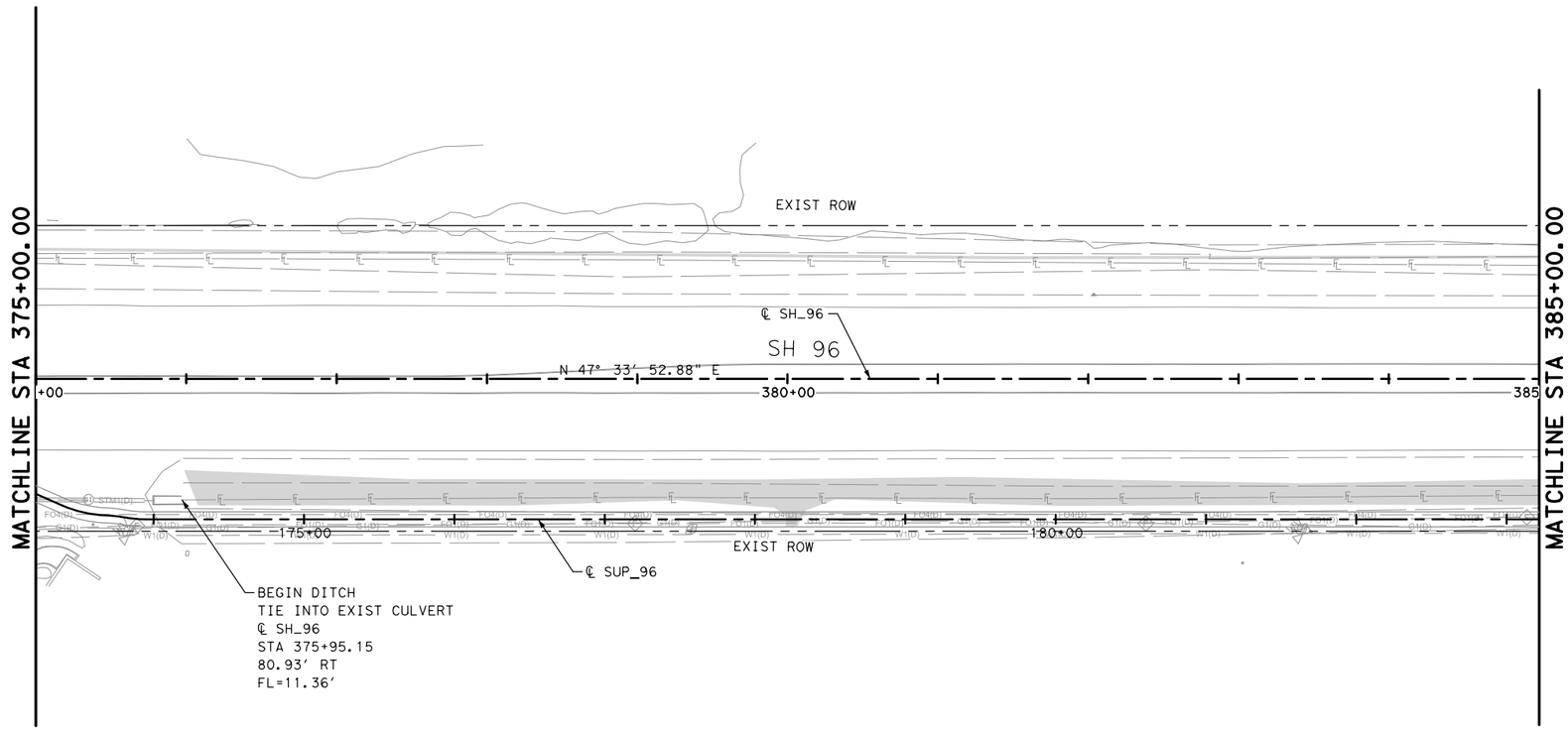

HORZ 0' 25' 50' 100'
VERT 0' 5' 10'

LEGEND:

- PROPOSED SAFETY END TREATMENT
- PROPOSED GRATE INLET
- PROPOSED MANHOLE
- STM1(D) — EXISTING STM SEWER
- PROPOSED STM SEWER
- EXISTING DITCH
- PROPOSED DITCH FLOWLINE
- WETLAND

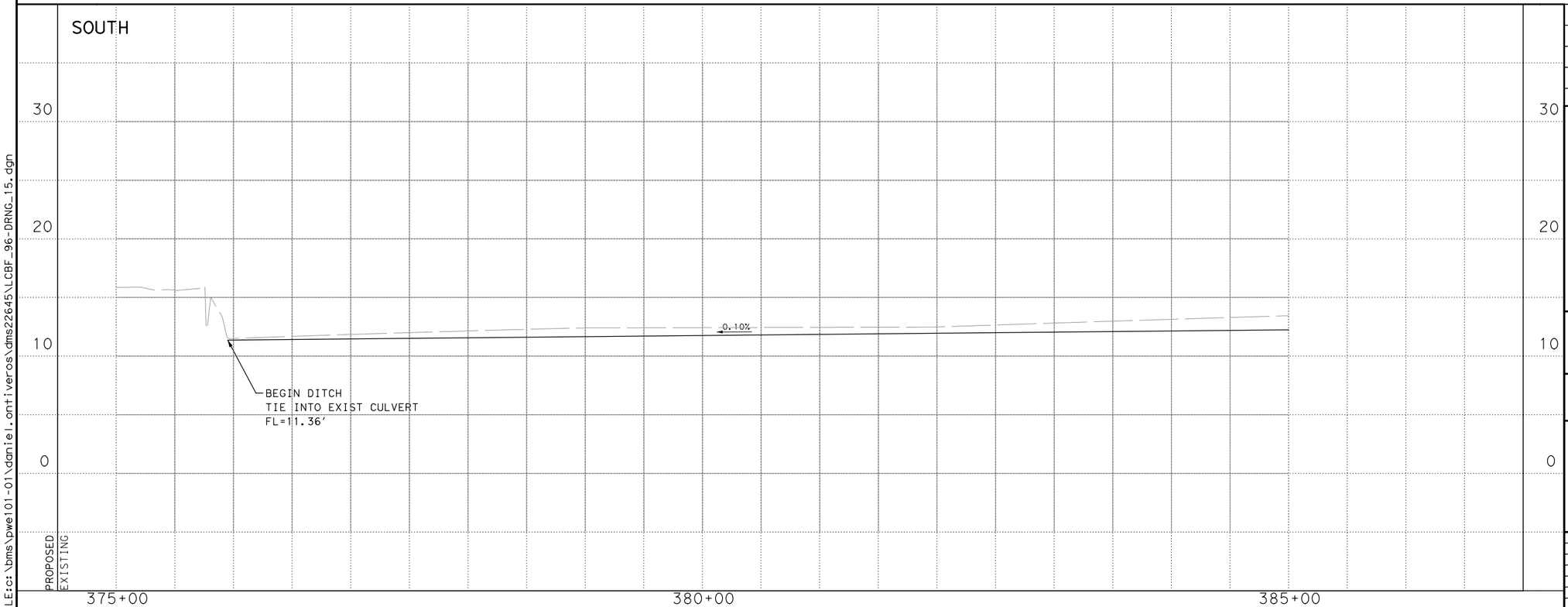

NO.	DATE	REVISION	APPROVED

STATE OF TEXAS
DAVID CORNYN
138892
LICENSED
PROFESSIONAL ENGINEER
8/2/2023

Texas Department of Transportation
©2023

JONES|CARTER
Texas Board of Professional Engineers Registration No. F-23290
4350 Lockhill Selma Rd, Suite 100• San Antonio, Texas 78249 •210.494.5511

FM 96
DRAINAGE
PLAN AND PROFILE
STA 385+00 TO STA 395+00

SHEET **15** OF **19**

DRAWN	FED. RD. DIV. NO.	FEDERAL AID PROJECT NO.		HIGHWAY NO.
CH	06			FM 270, ETC
DESIGNED	STATE	DIST.	COUNTY	SHEET NO.
DC	TEXAS	HOUSTON	GALVESTON	217
CHECKED	CONT.	SECT.	JOB	
NG	0912	73	215	
APPROVED				
DD				

PLOTDRIVER: LCBF.pltcfg PENTABLE: LCBF.tbl
DATE:8/2/2023 1:28:18 AM USER:do
FILE:c:\bms\pwe101-01\daniel.ontiveros\dms22645\LCBF_96-DRNG_15.dgn

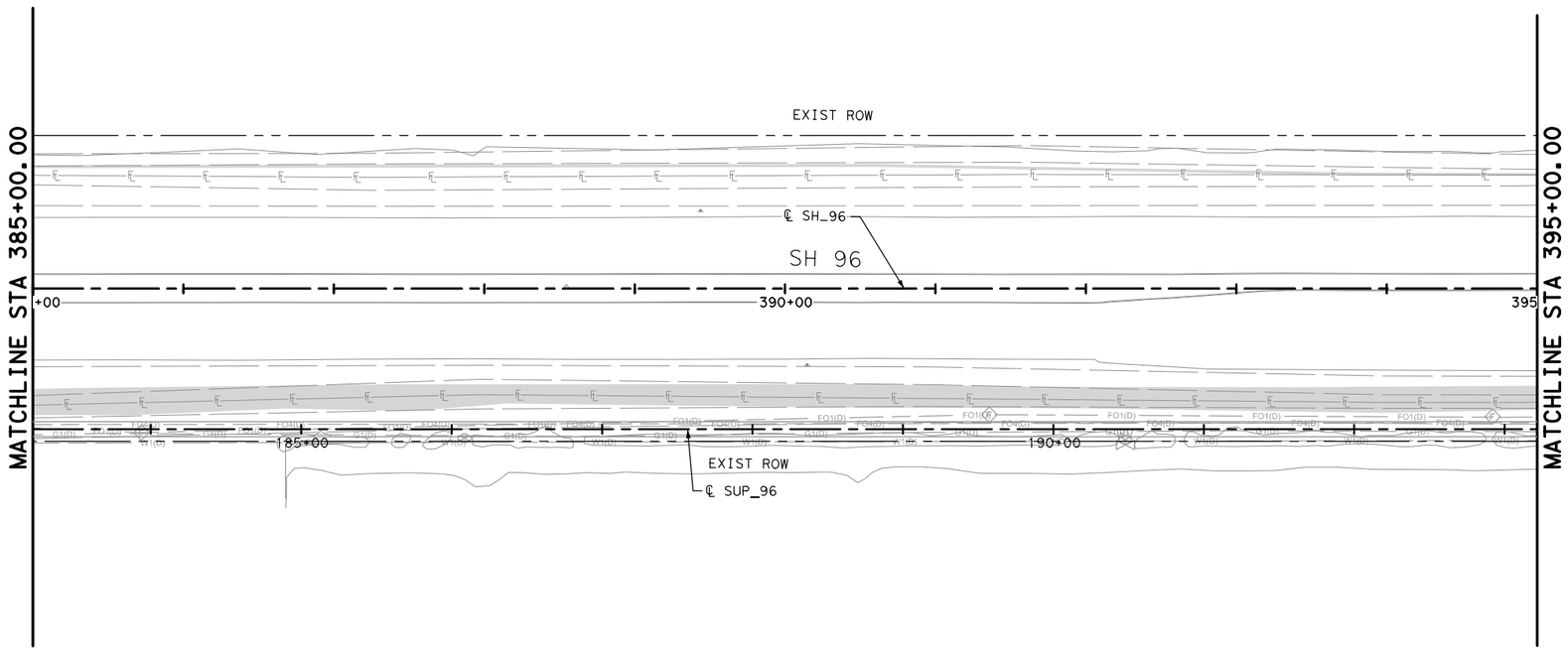

HORZ 0′ 25′ 50′ 100′
VERT 0′ 5′ 10′

LEGEND:

- PROPOSED SAFETY END TREATMENT
- PROPOSED GRATE INLET
- PROPOSED MANHOLE
- STM1(D) — EXISTING STM SEWER
- PROPOSED STM SEWER
- EXISTING DITCH
- PROPOSED DITCH FLOWLINE
- WETLAND

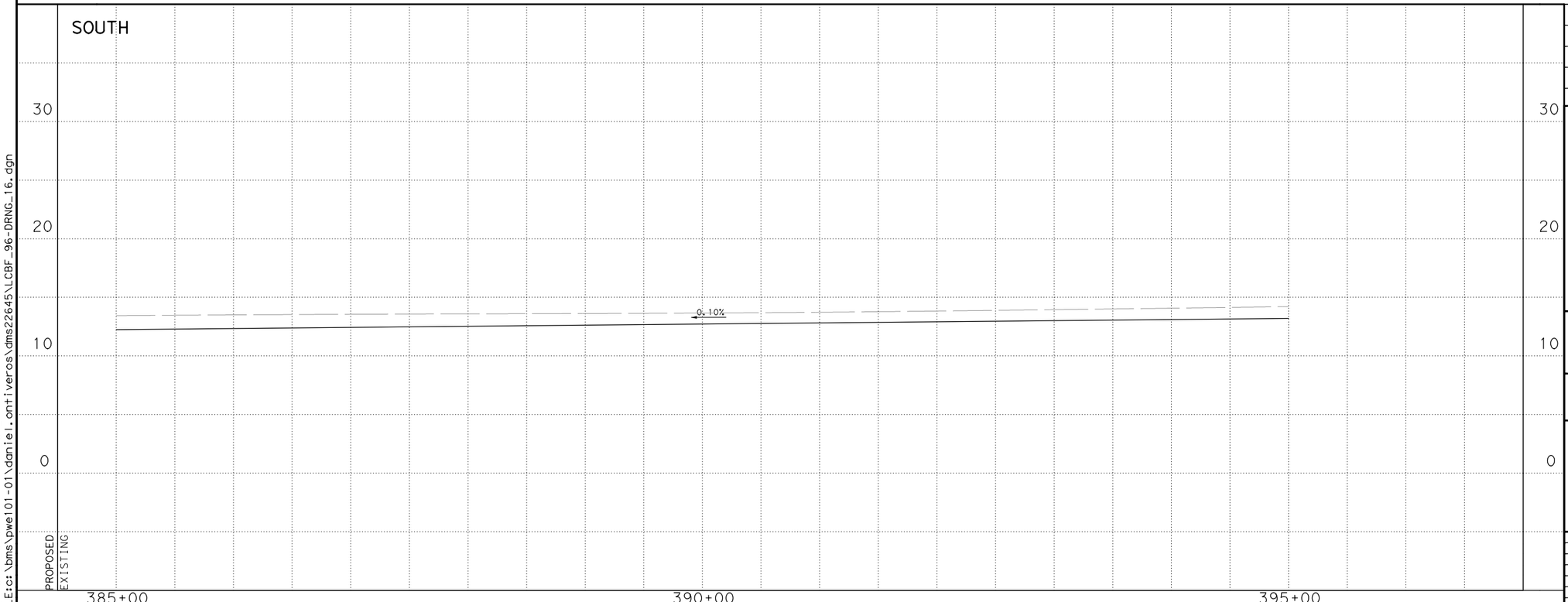

NO.	DATE	REVISION	APPROVED

STATE OF TEXAS
DAVID CORNYN
138892
LICENSED
PROFESSIONAL ENGINEER
8/2/2023

Texas Department of Transportation
©2023

JONES|CARTER
Texas Board of Professional Engineers Registration No. F-23290
4350 Lockhill Selma Rd, Suite 100• San Antonio, Texas 78249 •210.494.5511

SH 96
DRAINAGE
PLAN AND PROFILE
STA 385+00 TO STA 395+00

SHEET **16** OF **19**

DRAWN	FED. RD. DIV. NO.	FEDERAL AID PROJECT NO.		HIGHWAY NO.
CH	06			FM 270, ETC
DESIGNED	STATE	DIST.	COUNTY	SHEET NO.
DC	TEXAS	HOUSTON	GALVESTON	218
CHECKED	CONT.	SECT.	JOB	
NG	0912	73	215	
APPROVED				
DD				

PENTABLE:LCBF.tbl
PLOTDRIVER:LCBF.pltcfg
USER:do
DATE:8/2/2023 1:28:21 AM
FILE:c:\bms\pwe101-01\daniel.ontiveros\dms22645\LCBF_96-DRNG_16.dgn

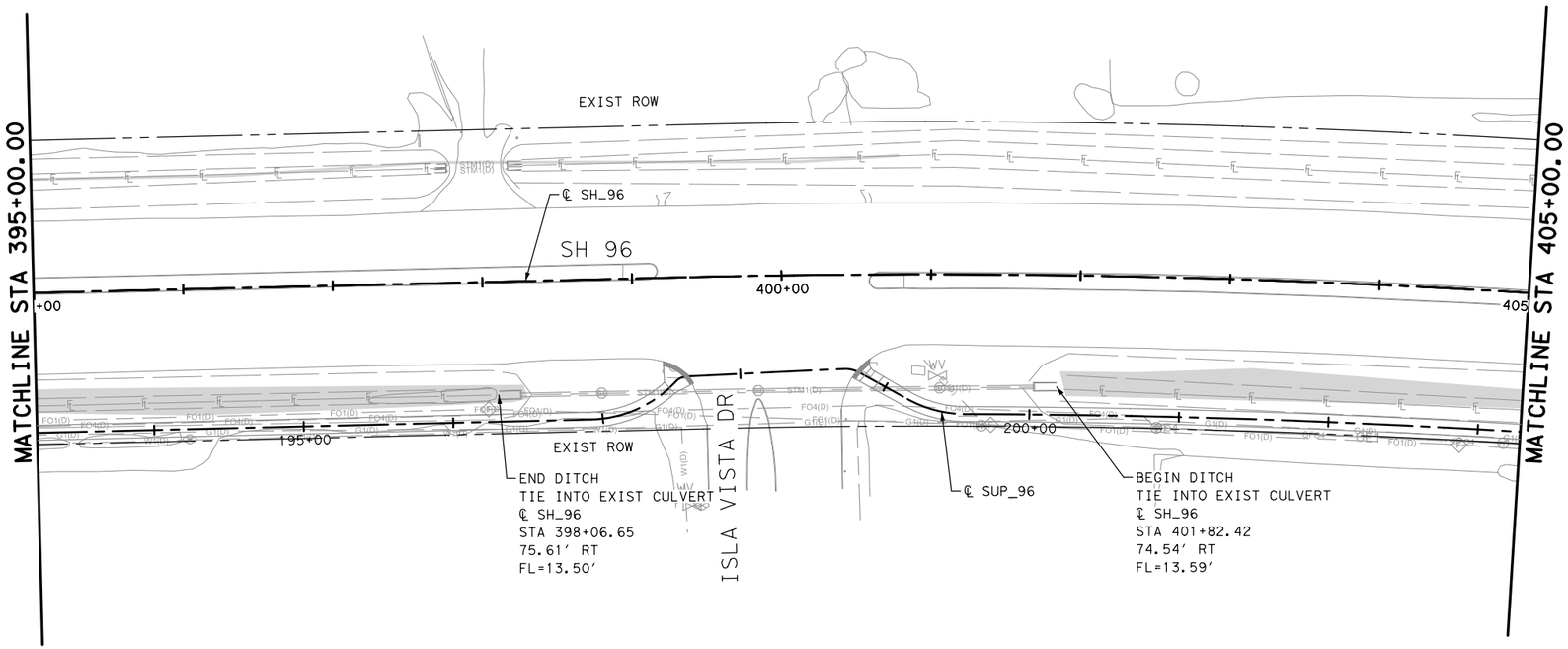

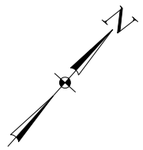

HORZ 0' 25' 50' 100'
VERT 0' 5' 10'

LEGEND:

- PROPOSED SAFETY END TREATMENT
- PROPOSED GRATE INLET
- PROPOSED MANHOLE
- STM1(D) — EXISTING STM SEWER
- PROPOSED STM SEWER
- EXISTING DITCH
- PROPOSED DITCH FLOWLINE
- WETLAND

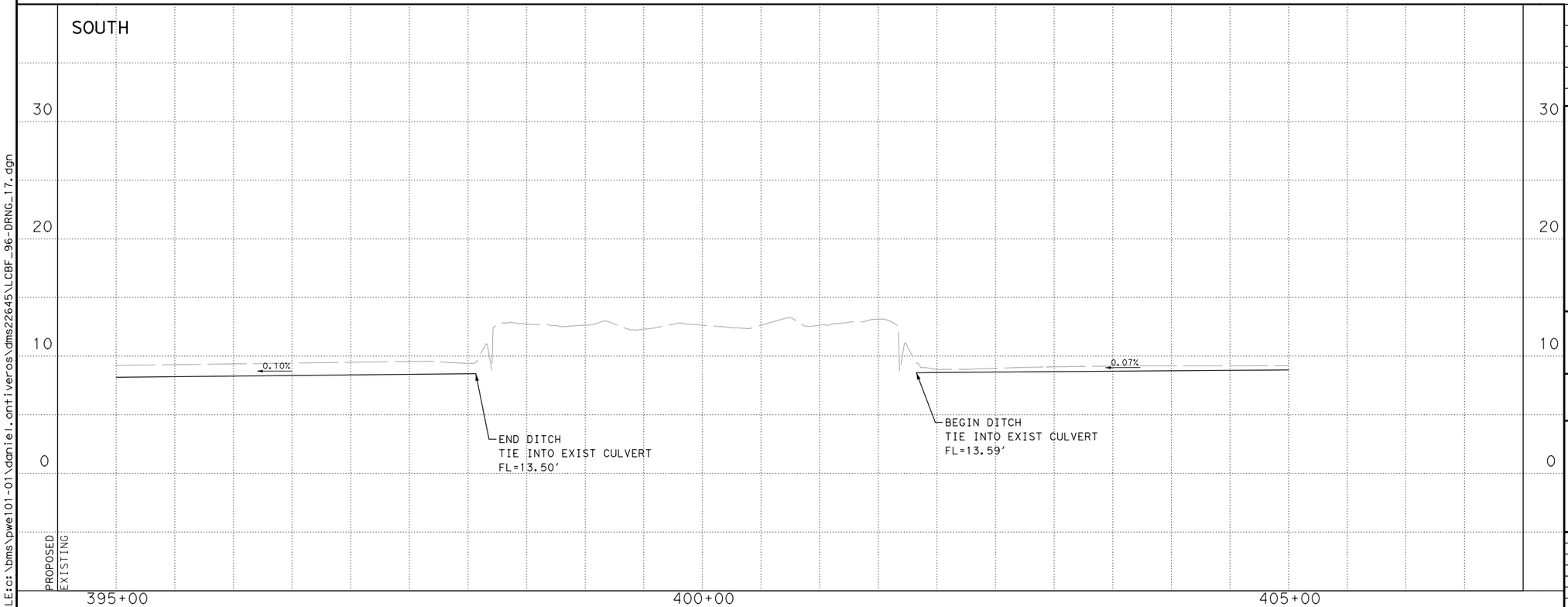

NO.	DATE	REVISION	APPROVED

STATE OF TEXAS
DAVID CORNYN
138892
LICENSED
PROFESSIONAL ENGINEER
8/2/2023

Texas Department of Transportation
©2023

JONES|CARTER
Texas Board of Professional Engineers Registration No. F-23290
4350 Lockhill Selma Rd, Suite 100• San Antonio, Texas 78249 •210.494.5511

SH 96
DRAINAGE
PLAN AND PROFILE
STA 395+00 TO STA 405+00

SHEET **17** OF **19**

DRAWN	FED. RD. DIV. NO.	FEDERAL AID PROJECT NO.		HIGHWAY NO.
CH	06			FM 270, ETC
DESIGNED	STATE	DIST.	COUNTY	SHEET NO.
DC	TEXAS	HOUSTON	GALVESTON	219
CHECKED	CONT.	SECT.	JOB	
NG	0912	73	215	
APPROVED				
DD				

PLOTDRIVER: LCBF.pltcfg
PENTABLE: LCBF.tbl
DATE: 8/2/2023 1:28:24 AM USER: do
FILE: c:\bms\pwe101-01\daniel.ontiveros\dms22645\LCBF_96-DRNG_17.dgn

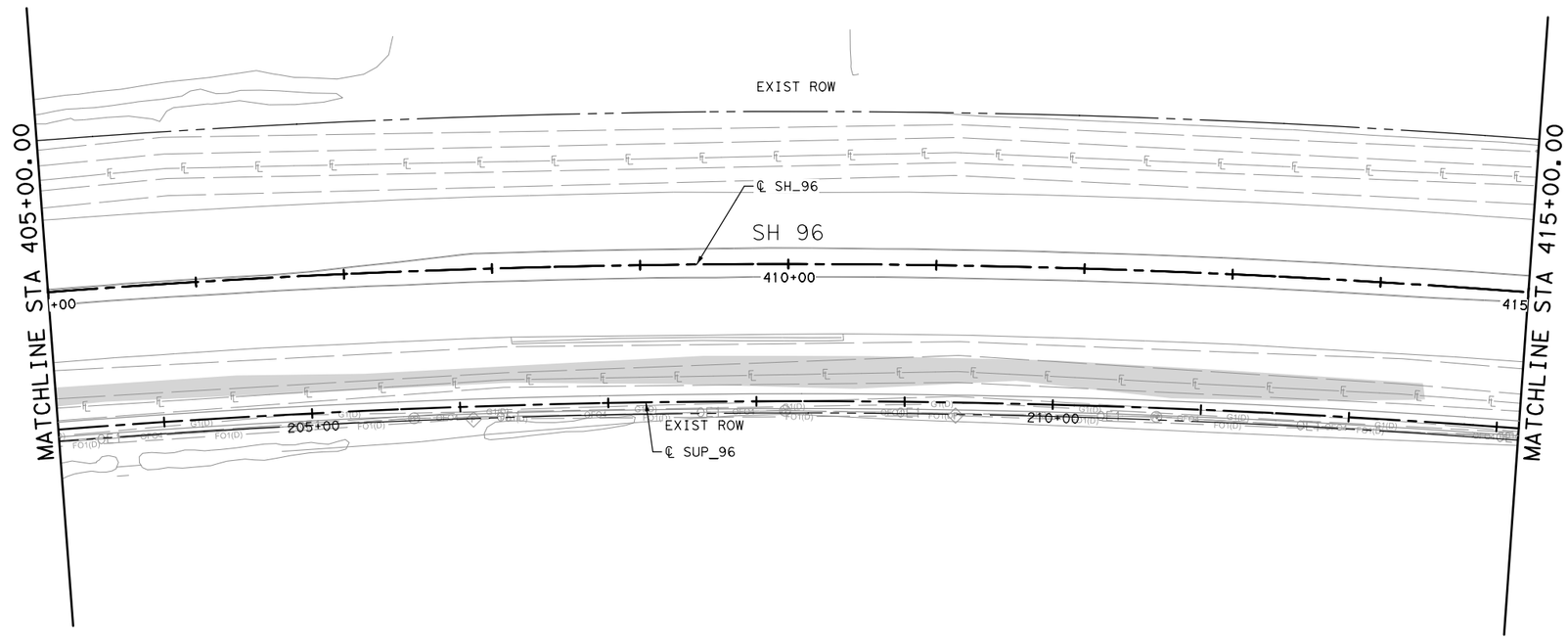

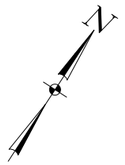

HORZ 0′ 25′ 50′ 100′
VERT 0′ 5′ 10′

LEGEND:

- PROPOSED SAFETY END TREATMENT
- PROPOSED GRATE INLET
- PROPOSED MANHOLE
- STM1(D) — EXISTING STM SEWER
- PROPOSED STM SEWER
- EXISTING DITCH
- PROPOSED DITCH FLOWLINE
- WETLAND

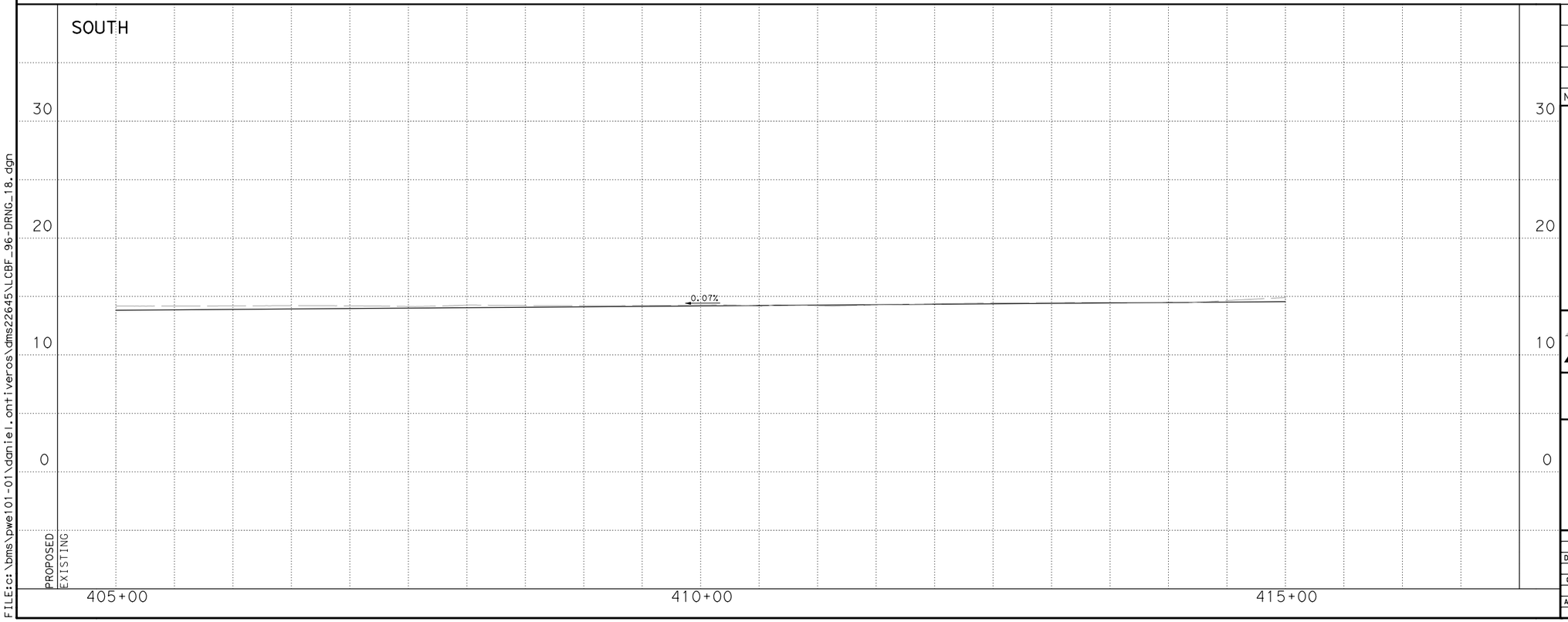

NO.	DATE	REVISION	APPROVED

STATE OF TEXAS
DAVID CORNYN
138892
LICENSED
PROFESSIONAL ENGINEER
8/2/2023

Texas Department of Transportation
©2023

JONES|CARTER
Texas Board of Professional Engineers Registration No. F-23290
4350 Lockhill Selma Rd, Suite 100• San Antonio, Texas 78249 •210.494.5511

SH 96
DRAINAGE
PLAN AND PROFILE
STA 405+00 TO STA 415+00

SHEET **18** OF **19**

DRAWN	FED. RD. DIV. NO.	FEDERAL AID PROJECT NO.		HIGHWAY NO.
CH	06			FM 270, ETC
DESIGNED	STATE	DIST.	COUNTY	SHEET NO.
DC	TEXAS	HOUSTON	GALVESTON	220
CHECKED	CONT.	SECT.	JOB	
NG	0912	73	215	
APPROVED				
DD				

PENTABLE:LCBF.tbl
PLOTDRIVER:LCBF.pltcfg
USER:do
DATE:8/2/2023 1:28:27 AM
FILE:c:\bms\pwe101-01\daniel.ontiveros\dms22645\LCBF_96-DRNG_18.dgn

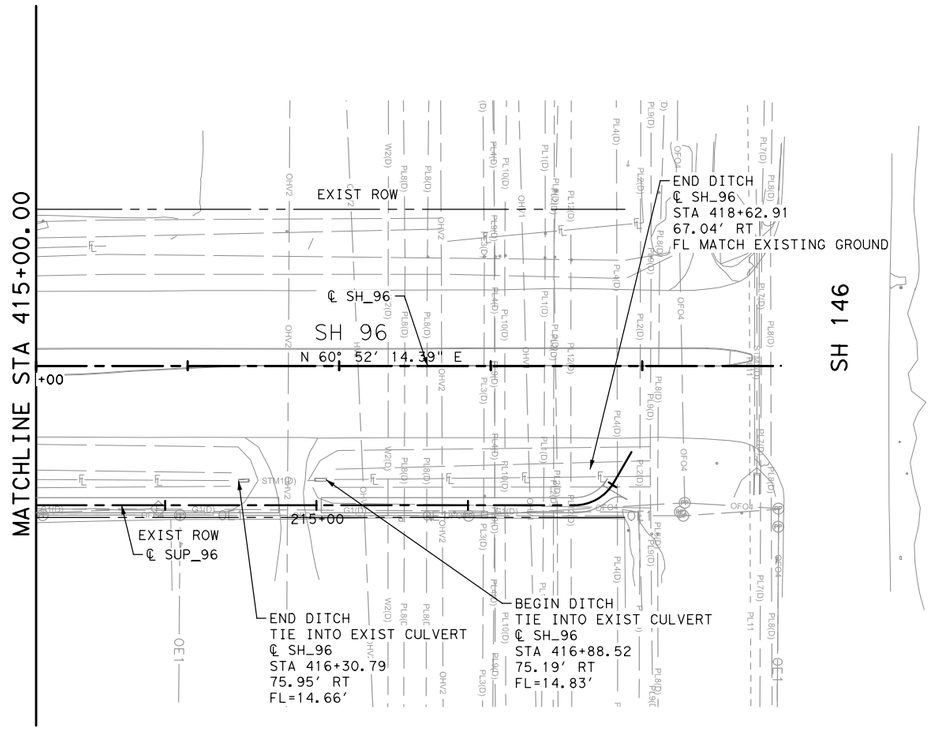

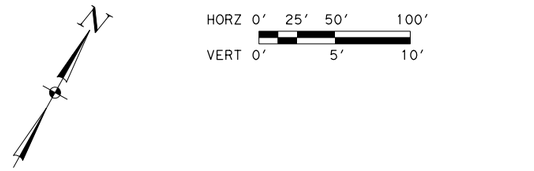

LEGEND:

- PROPOSED SAFETY END TREATMENT
- PROPOSED GRATE INLET
- PROPOSED MANHOLE
- STM1(D) — EXISTING STM SEWER
- PROPOSED STM SEWER
- EXISTING DITCH
- PROPOSED DITCH FLOWLINE
- WETLAND

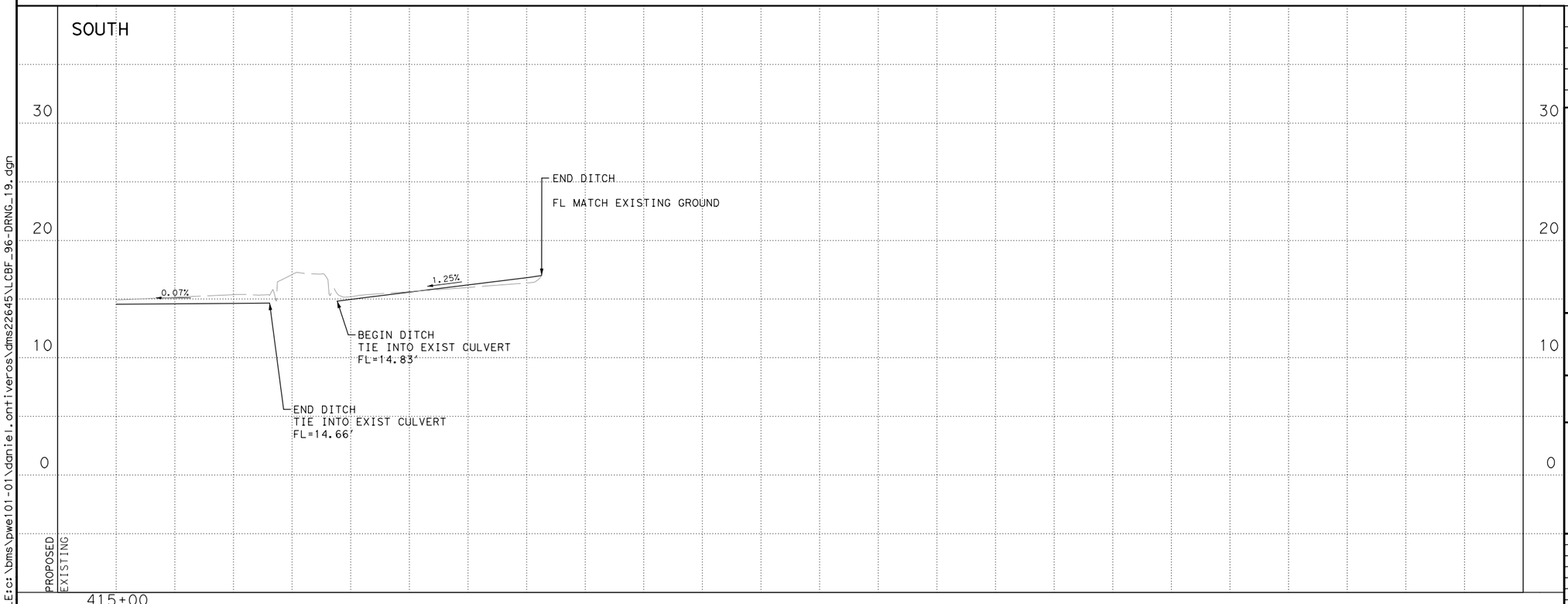

NO.	DATE	REVISION	APPROVED

STATE OF TEXAS
DAVID CORNYN
138892
LICENSED
PROFESSIONAL ENGINEER
8/2/2023

Texas Department of Transportation
©2023

JONES|CARTER
Texas Board of Professional Engineers Registration No. F-23290
4350 Lockhill Selma Rd, Suite 100• San Antonio, Texas 78249 •210.494.5511

SH 96
DRAINAGE
PLAN AND PROFILE
STA 415+00 TO END

SHEET **19** OF **19**

DRAWN	FED. RD. DIV. NO.	FEDERAL AID PROJECT NO.		HIGHWAY NO.
CH	06			FM 270, ETC
DESIGNED	STATE	DIST.	COUNTY	SHEET NO.
DC	TEXAS	HOUSTON	GALVESTON	221
CHECKED	CONT.	SECT.	JOB	
NG	0912	73	215	
APPROVED				
DD				

PLOTDRIVER: LCBF.pltcfg
PENTABLE: LCBF.tbl
USER: do
DATE: 8/2/2023 1:28:29 AM
FILE: c:\bms\pwe101-01\daniel.ontiveros\dms22645\LCBF_96-DRNG_19.dgn

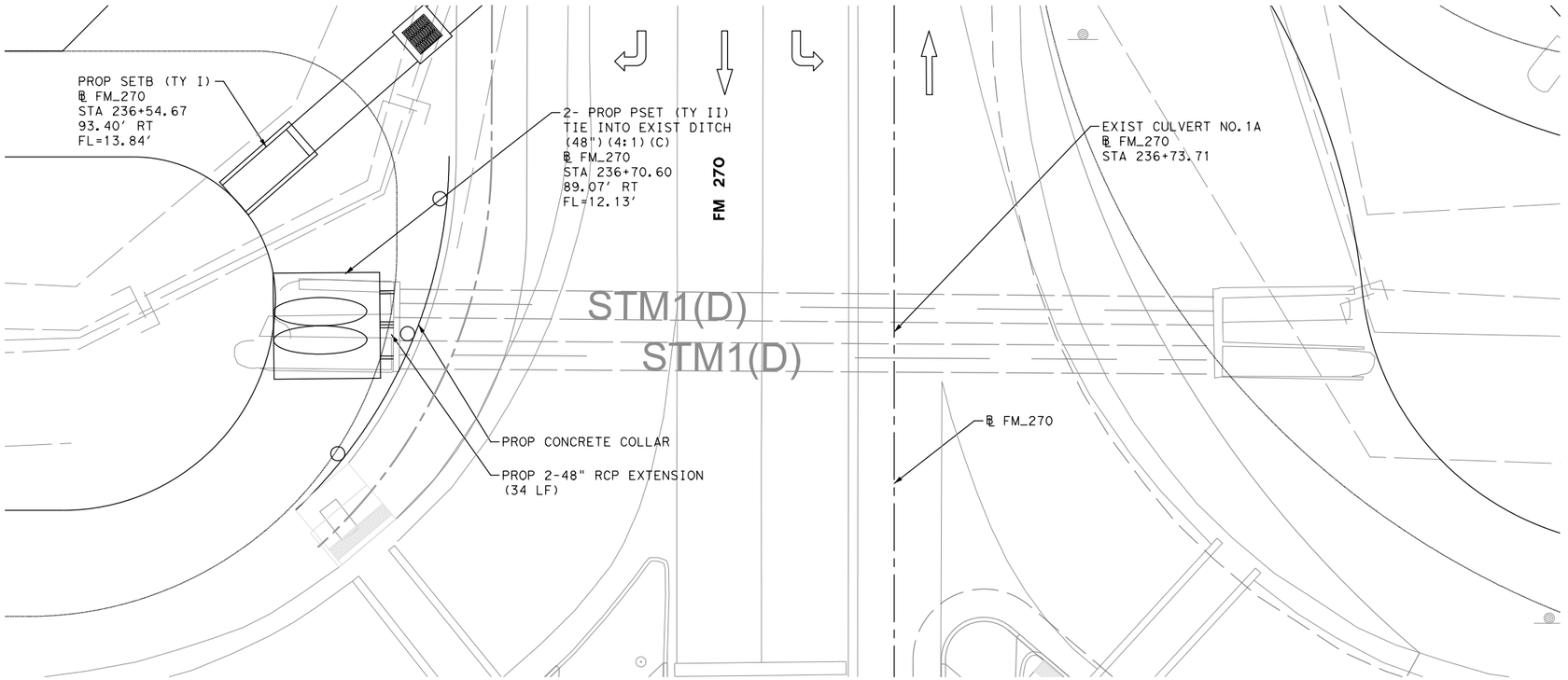

HORZ 0' 5' 10' 20'
VERT 0' 2.5' 5'

NOTES:

1. FOR HYDRAULIC INFORMATION, SEE SHEET 226

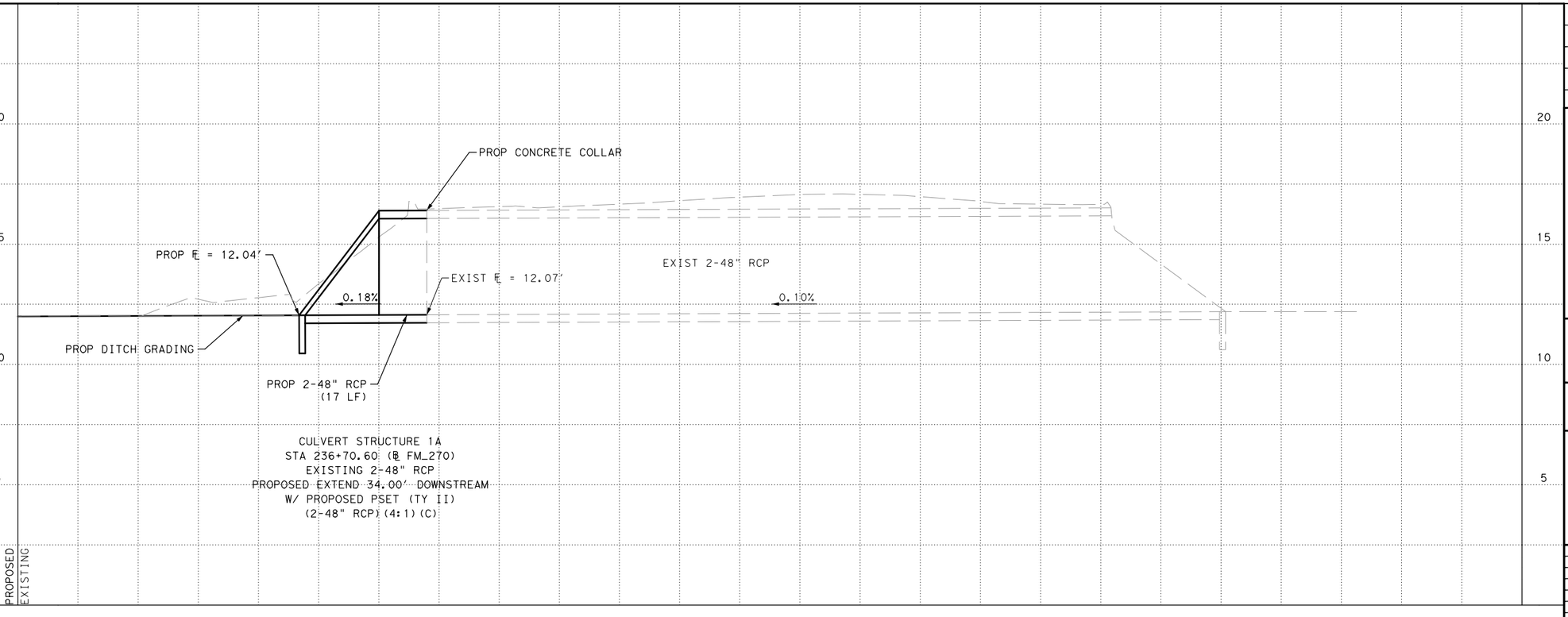

CULVERT STRUCTURE 1A
STA 236+70.60 (℄ FM_270)
EXISTING 2-48" RCP
PROPOSED EXTEND 34.00' DOWNSTREAM
W/ PROPOSED PSET (TY II)
(2-48" RCP) (4:1) (C)

NO.	DATE	REVISION	APPROVED

STATE OF TEXAS
DAVID CORNYN
138892
LICENSED
PROFESSIONAL ENGINEER
8/2/2023

Texas Department of Transportation
©2023

JONES|CARTER
Texas Board of Professional Engineers Registration No. F-23290
4350 Lockhill Selma Rd, Suite 100• San Antonio, Texas 78249 •210.494.5511

FM 270
CULVERT NO. 1
LAYOUT

SHEET **01** OF **05**

DRAWN	FED.RD. DIV.NO.	FEDERAL AID PROJECT NO.		HIGHWAY NO.
CH	06			FM 270, ETC
DESIGNED	STATE	DIST.	COUNTY	SHEET NO.
DC	TEXAS	HOUSTON	GALVESTON	222
CHECKED	CONT.	SECT.	JOB	
NG	0912	73	215	
APPROVED				
DD				

PENTABLE: LCBF.tbl
PLOTDRIVER: LCBF.pltcfg
USER: do
12:45:30 AM
DATE: 8/2/2023
FILE: c:\bms\pwe101-01\daniel.ontiveros\dms22645\LCBF_CULV01.dgn

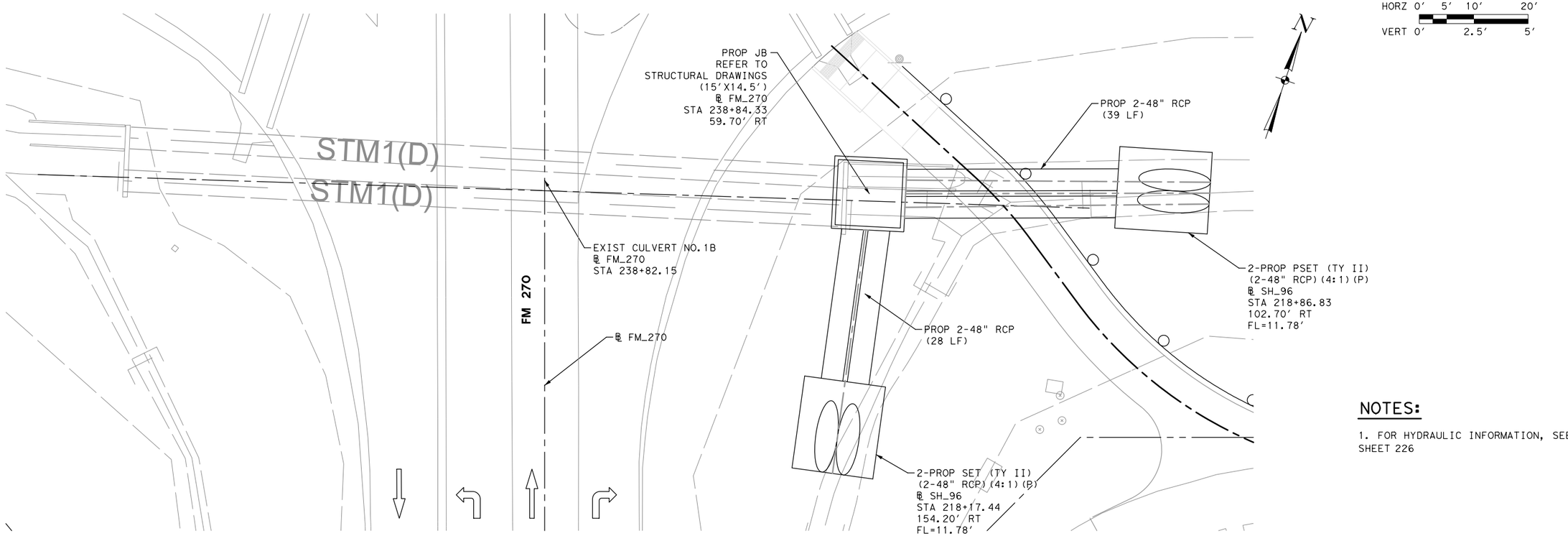

NOTES:

1. FOR HYDRAULIC INFORMATION, SEE SHEET 226

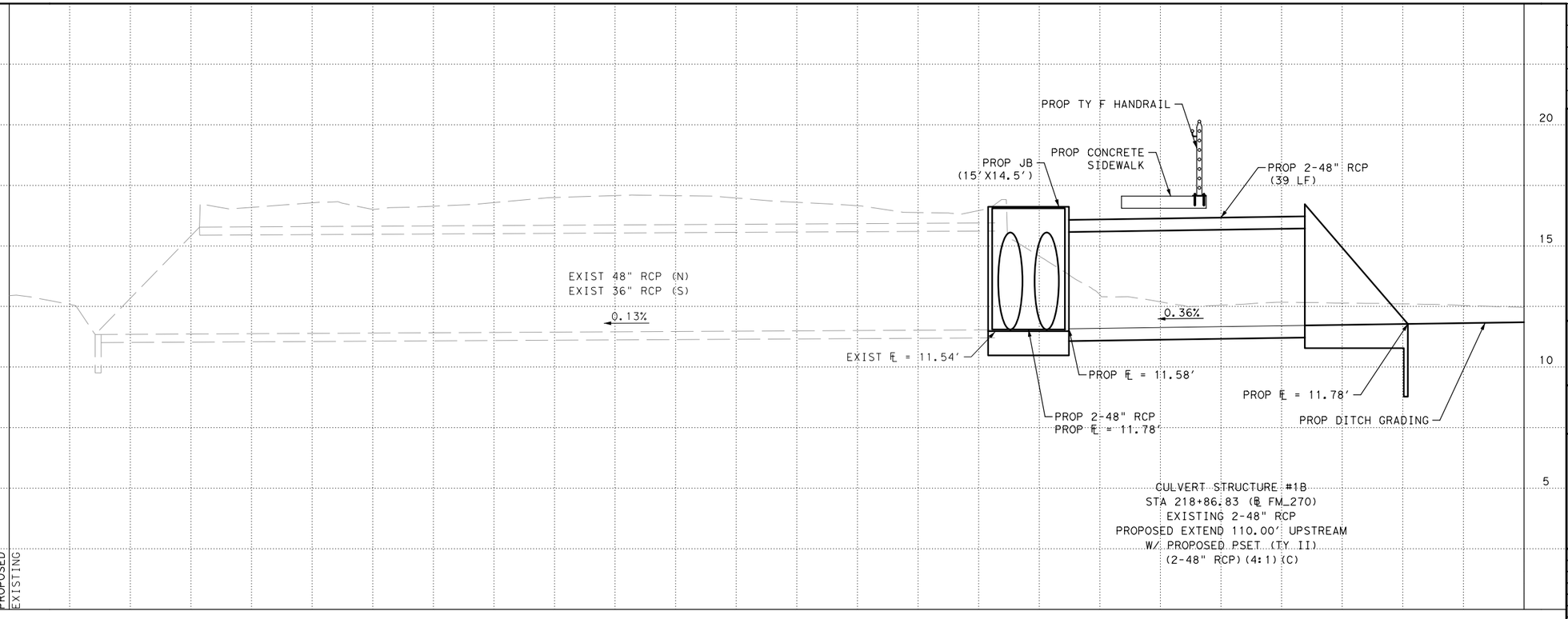

CULVERT STRUCTURE #1B
STA 218+86.83 (℄ FM_270)
EXISTING 2-48" RCP
PROPOSED EXTEND 110.00' UPSTREAM
W/ PROPOSED PSET (TY II)
(2-48" RCP)(4:1)(C)

NO.	DATE	REVISION	APPROVED

STATE OF TEXAS
DAVID CORNYN
138892
LICENSED
PROFESSIONAL ENGINEER
8/2/2023

Texas Department of Transportation
©2023

JONES|CARTER
Texas Board of Professional Engineers Registration No. F-23290
4350 Lockhill Selma Rd, Suite 100• San Antonio, Texas 78249 •210.494.5511

FM 270
CULVERT NO. 1B
LAYOUT

SHEET **02** OF **05**

DRAWN	FED.RD. DIV.NO.	FEDERAL AID PROJECT NO.		HIGHWAY NO.
CH	06			FM 270, ETC
DESIGNED	STATE	DIST.	COUNTY	SHEET NO.
DC	TEXAS	HOUSTON	GALVESTON	223
CHECKED	CONT.	SECT.	JOB	
NG	0912	73	215	
APPROVED				
DD				

PENTABLE: LCBF.tbl
PLOTDRIVER: LCBF.pltcfg
USER: do
12:45:36 AM
DATE: 8/2/2023
FILE: c:\bms\pwe101-01\daniel.ontiveros\dms22645\LCBF_CULV02.dgn

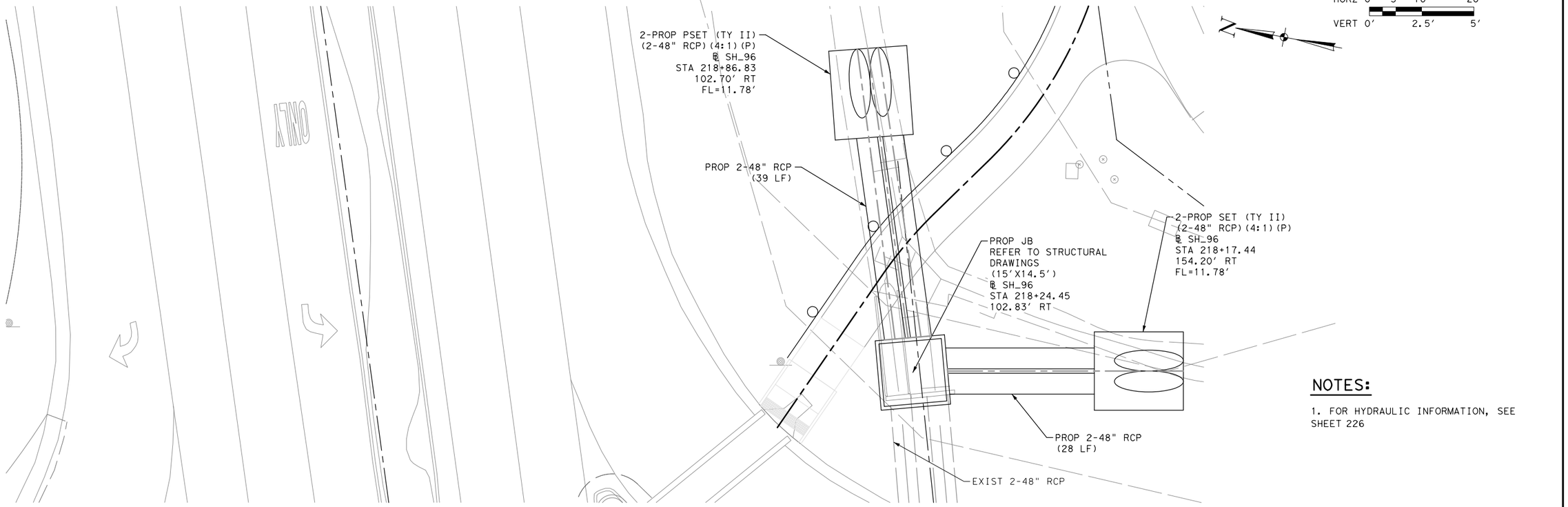

NOTES:

1. FOR HYDRAULIC INFORMATION, SEE SHEET 226

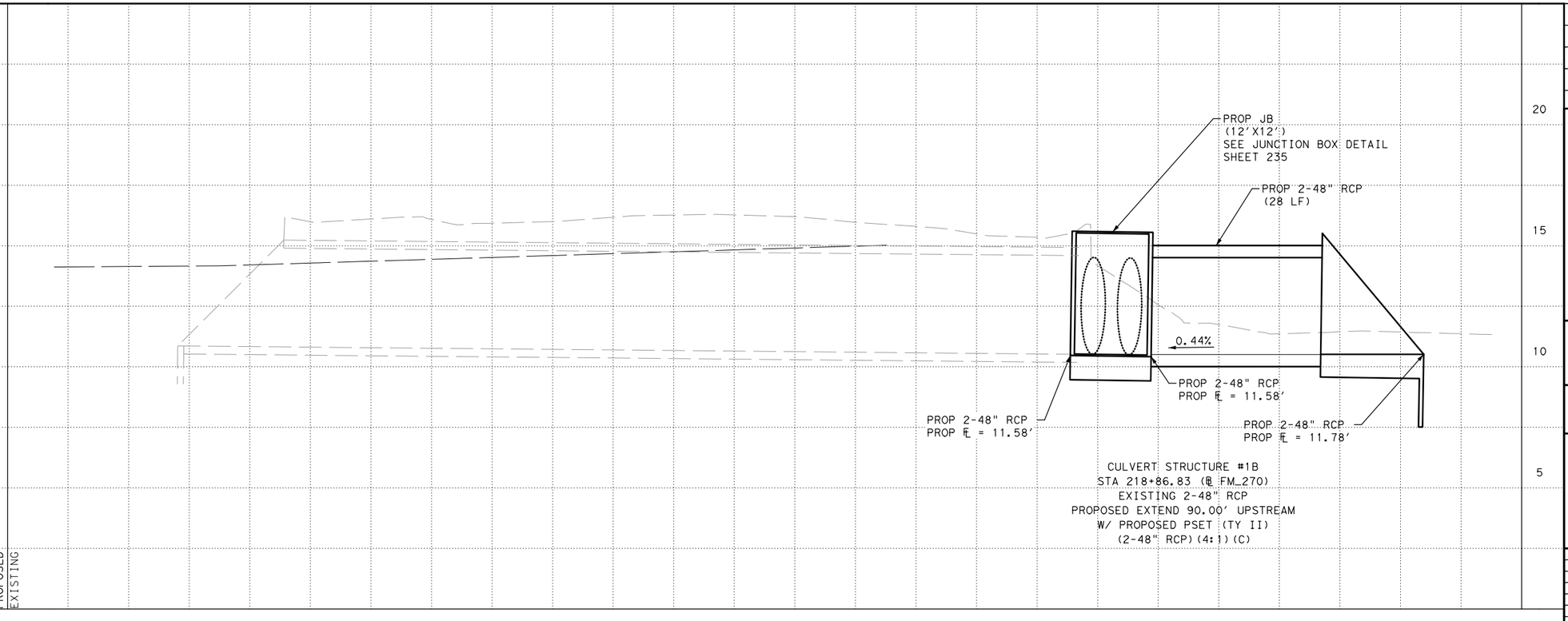

NO.	DATE	REVISION	APPROVED

STATE OF TEXAS
DAVID CORNYN
138892
LICENSED
PROFESSIONAL ENGINEER
8/2/2023

Texas Department of Transportation
©2023

JONES|CARTER
Texas Board of Professional Engineers Registration No. F-23290
4350 Lockhill Selma Rd, Suite 100• San Antonio, Texas 78249 •210.494.5511

FM 270
CULVERT NO. 1C
LAYOUT

SHEET 03 OF 05

DRAWN	FED. RD. DIV. NO.	FEDERAL AID PROJECT NO.		HIGHWAY NO.
CH	06			FM 270, ETC
DESIGNED	STATE	DIST.	COUNTY	SHEET NO.
DC	TEXAS	HOUSTON	GALVESTON	224
CHECKED	CONT.	SECT.	JOB	
NG	0912	73	215	
APPROVED				
DD				

PENTABLE: LCBF.tbl
PLOTDRIVER: LCBF.pltcfg
DATE: 8/2/2023 12:46:01 AM USER: do
FILE: c:\bms\pwe101-01\daniel.ontiveros\dms22645\LCBF_CULV03.dgn

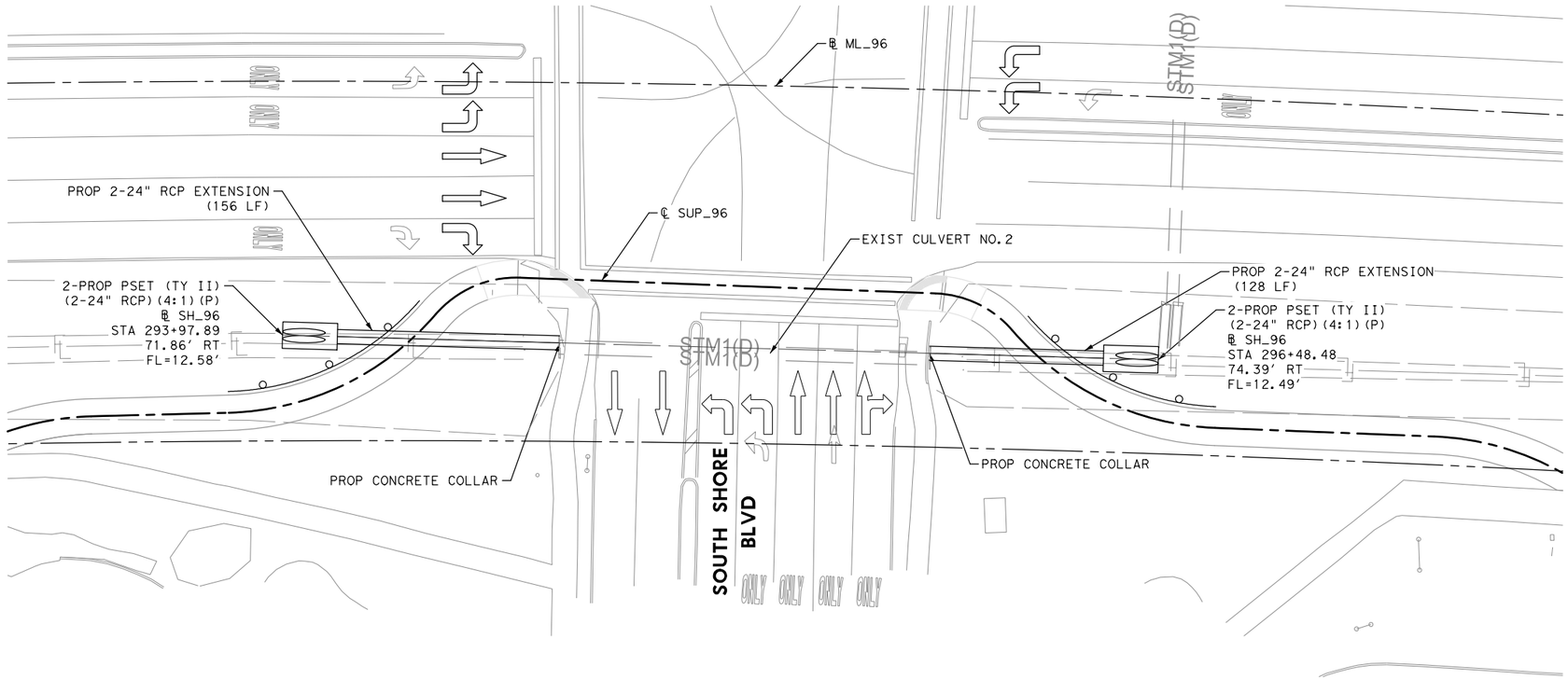

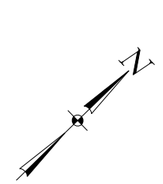

NOTES:

1. FOR HYDRAULIC INFORMATION, SEE SHEET 226

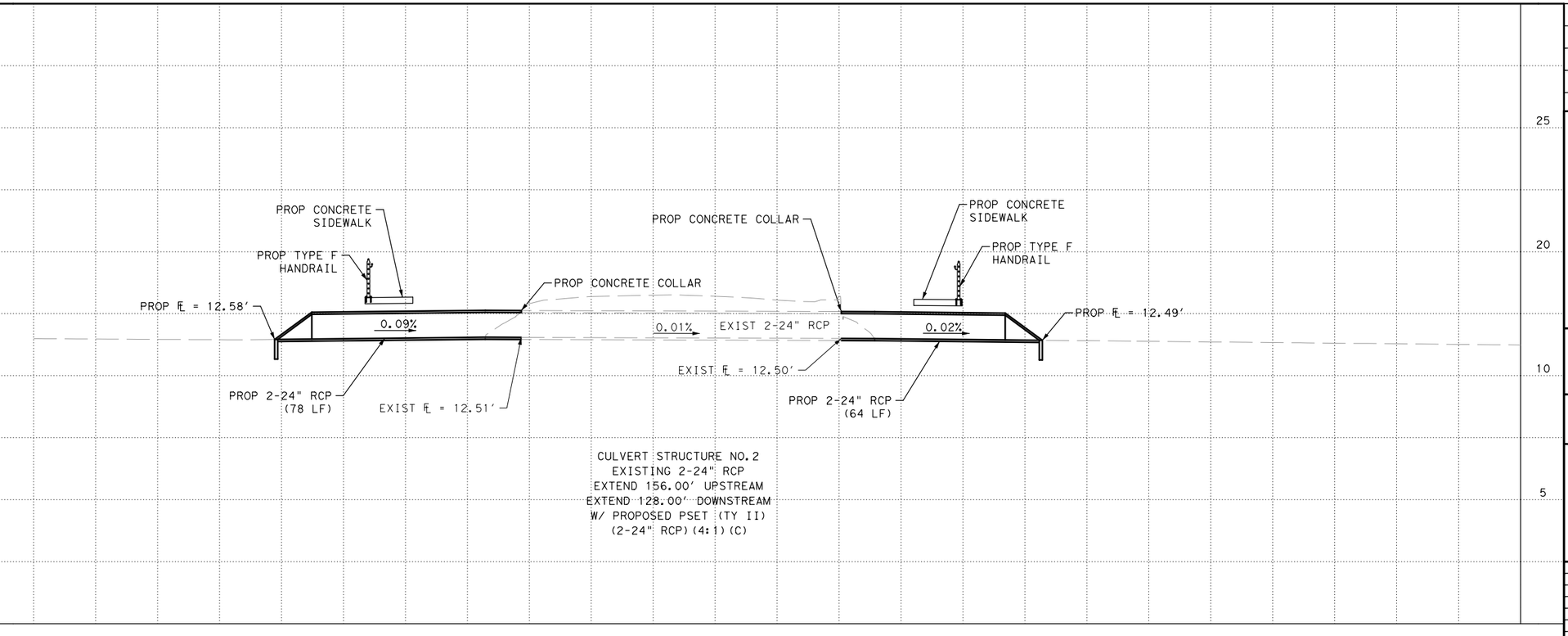

CULVERT STRUCTURE NO.2
EXISTING 2-24" RCP
EXTEND 156.00' UPSTREAM
EXTEND 128.00' DOWNSTREAM
W/ PROPOSED PSET (TY II)
(2-24" RCP)(4:1)(C)

NO.	DATE	REVISION	APPROVED

STATE OF TEXAS
DAVID CORNYN
138892
LICENSED
PROFESSIONAL ENGINEER
8/2/2023

Texas Department of Transportation
©2023

JONES|CARTER
Texas Board of Professional Engineers Registration No. F-23290
4350 Lockhill Selma Rd, Suite 100• San Antonio, Texas 78249 •210.494.5511

SH 96
CULVERT NO.2
LAYOUT

SHEET **04** OF **05**

DRAWN	FED.RD. DIV.NO.	FEDERAL AID PROJECT NO.		HIGHWAY NO.
CH	06			FM 270, ETC
DESIGNED	STATE	DIST.	COUNTY	SHEET NO.
DC	TEXAS	HOUSTON	GALVESTON	225
CHECKED	CONT.	SECT.	JOB	
NG	0912	73	215	
APPROVED				
DD				

PENTABLE:LCBF.tbl
PLOTDRIVER:LCBF.pltcfg
DATE:8/2/2023 12:46:30 AM USER:do
FILE:c:\bms\pwe101-01\daniel.ontiveros\dms22645\LCBF_CULV04.dgn

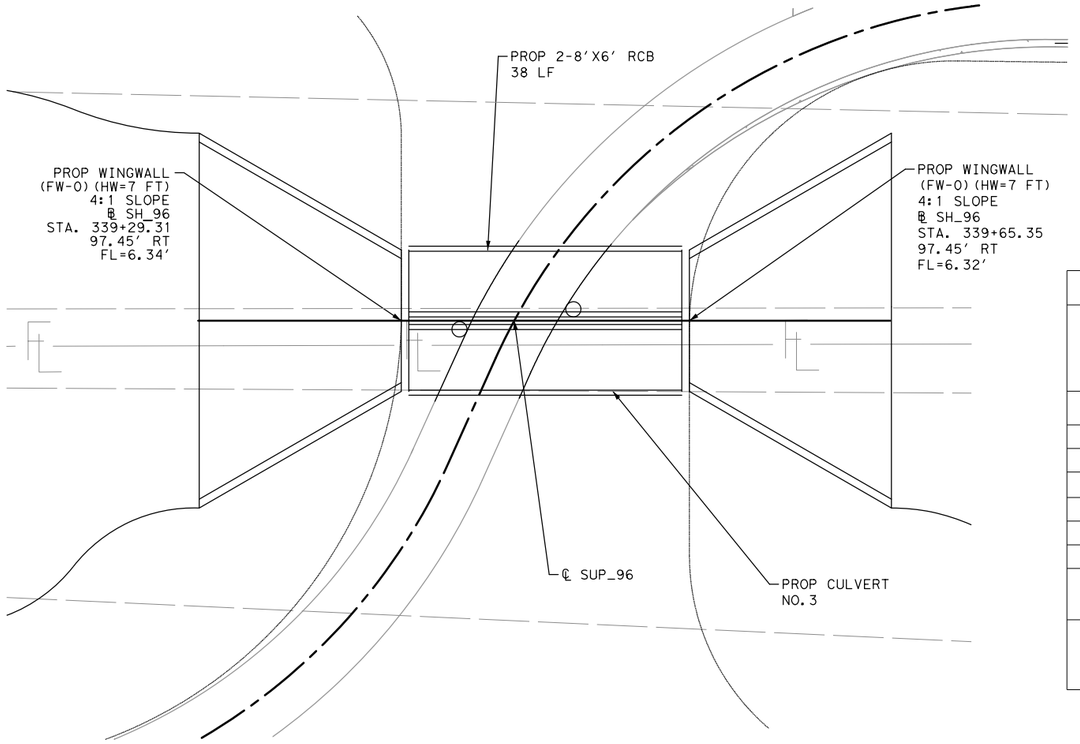

HORZ 0' 5' 10' 20'
VERT 0' 2.5' 5'

HYDRAULIC DATA SHEET

ID	ALIGNMENT	STATION	DESCRIPTION	DRAINAGE AREA NUMBER	AREA (MI)	RUNOFF FLOW (CFS)	UPSTREAM INVERT (FT)	DOWNSTREAM INVERT (FT)	CULVERT SLOPE (%)	DESIGN FREQUENCY (YR)	EXISTING			PROPOSED		
											HW (FT)	TW (FT)	Vout (FT/S)	HW (FT)	TW (FT)	Vout (FT/S)
1070	SH 96	211+21.10	3-5'x3' RCB	X_2, X_3, X_3A, X_4, X_5, X_6	0.07	256.07	11.08	10.94	0.10	100	17.12	17.09	2.69	17.12	17.09	2.68
1066	SH 96	218+11.17	2-48" RCP	V_1, V_2	0.04	133.70	11.57	12.17	-0.52	100	17.63	17.62	1.98	17.61	17.60	1.97
1072	SH 96	218+22.08	2-36" RCP	X_2, X_3, X_3A, X_4	0.03	113.12	11.77	11.46	0.23	100	17.17	17.15	3.49	17.17	17.15	3.49
1093	SH 96	284+91.09	2-24" RCP	X_1, Z_1, Z_2	0.04	121.67	12.79	12.75	0.03	100	17.18	17.05	2.26	17.15	17.00	2.27
1099	SH 96	296+52.22	2-24" RCP	Z_3, Z_4	0.01	49.49	12.33	11.8	0.43	100	16.96	16.97	-4.29	16.91	16.93	-4.31
1104	SH 96	308+64.98	2-24" RCP	Z_5	0.01	49.87	11.58	10.63	0.76	100	16.94	16.94	-3.83	16.89	16.90	-3.86
1107	SH 96	315+85.25	2-24" RCP	Z_6	0.01	39.00	11.2	9.95	1.00	100	16.91	16.94	-4.83	16.85	16.89	-4.76
1114	SH 96	330+42.53	2-7'x4'RCB	Cross_1A, Cross_1B, Y_2, Y_3, Y_4,	0.84	1212.26	7.4	6.87	0.28	100	16.94	16.48	5.94	16.89	16.36	5.98
1117	SH 96	342+15.43	2-7'x5'RCB	Cross_2, Cross_3, Cross_4A, Cross_4B, AA_1, BB_1, BB_2, BB_3,	0.35	866.57	7.2	7.1	0.07	100	15.83	15.72	3.92	15.83	15.72	3.74

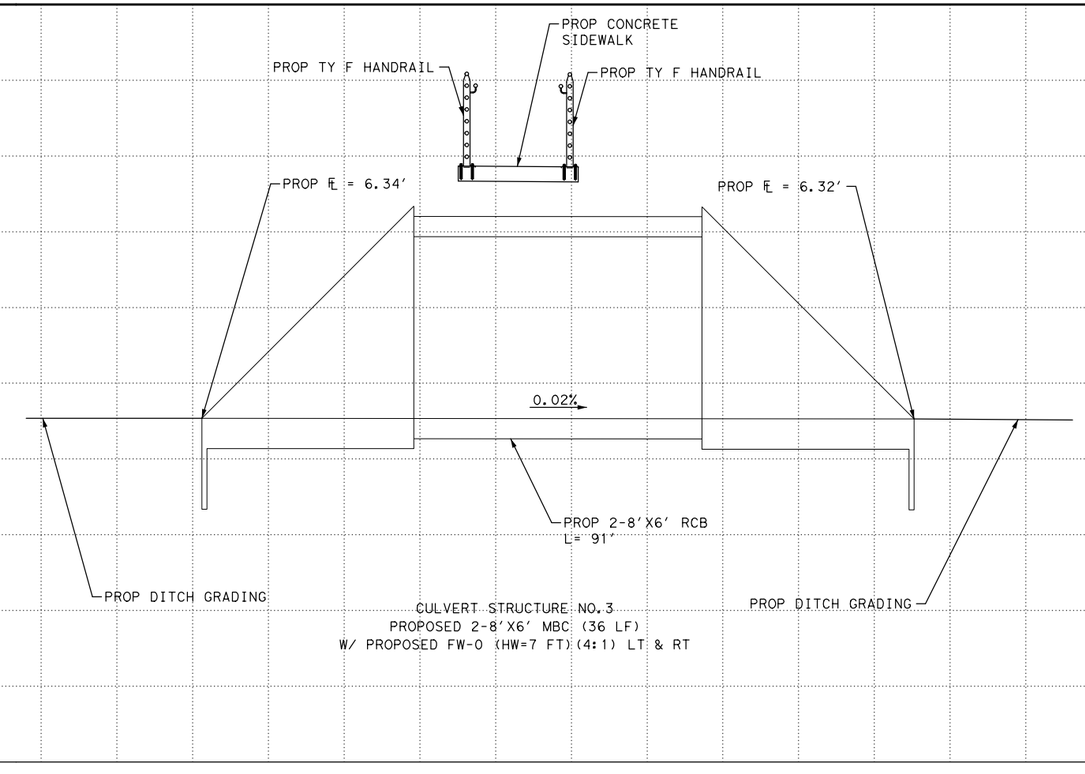

CULVERT STRUCTURE NO.3
PROPOSED 2-8'X6' MBC (36 LF)
W/ PROPOSED FW-0 (HW=7 FT)(4:1) LT & RT

NO.	DATE	REVISION	APPROVED

STATE OF TEXAS
DAVID CORNYN
138892
LICENSED
PROFESSIONAL ENGINEER
8/2/2023

Texas Department of Transportation
©2023

JONES|CARTER
Texas Board of Professional Engineers Registration No. F-23290
4350 Lockhill Selma Rd, Suite 100• San Antonio, Texas 78249 •210.494.5511

SH 96
CULVERT NO. 3
LAYOUT

SHEET **05** OF **05**

DRAWN	FED.RD. DIV.NO.	FEDERAL AID PROJECT NO.		HIGHWAY NO.
CH	06			FM 270, ETC
DESIGNED	STATE	DIST.	COUNTY	SHEET NO.
DC	TEXAS	HOUSTON	GALVESTON	226
CHECKED	CONT.	SECT.	JOB	
NG	0912	73	215	
APPROVED				
DD				

PENTABLE:LCBF.tbl
PLOTDRIVER:LCBF.pltcfg
USER:do
12:46:57 AM
DATE:8/2/2023
FILE:c:\bms\pwe101-01\daniel.ontiveros\dms22645\LCBF_CULV05.dgn

DISCLAIMER:
The use of this standard is governed by the "Texas Engineering Practice Act". No warranty of any kind is made by TxDOT for any purpose whatsoever. TxDOT assumes no responsibility for the conversion of this standard to other formats or for incorrect results or damages resulting from its use.

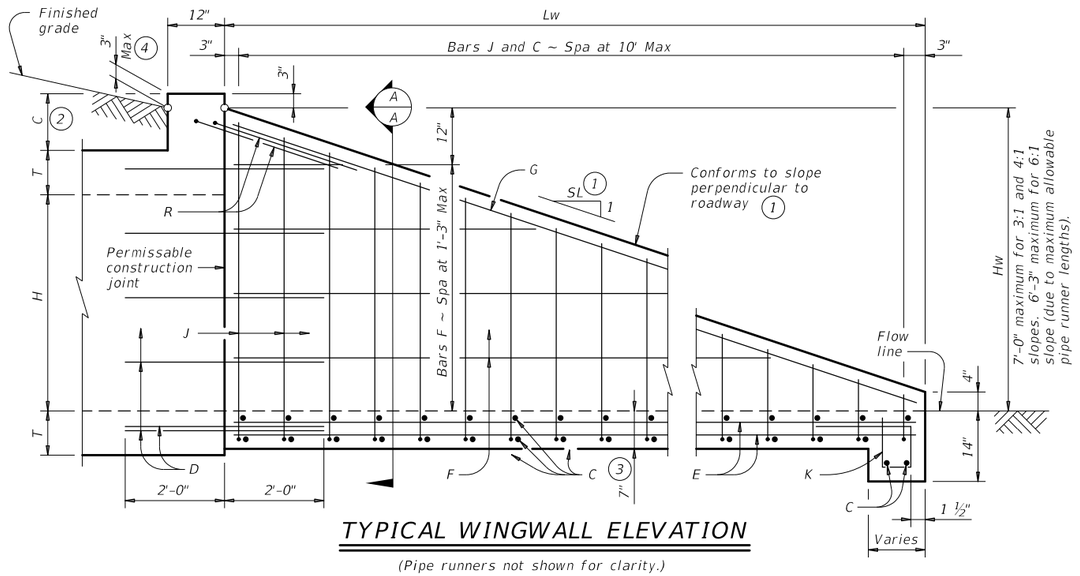

TYPICAL WINGWALL ELEVATION

(Pipe runners not shown for clarity.)

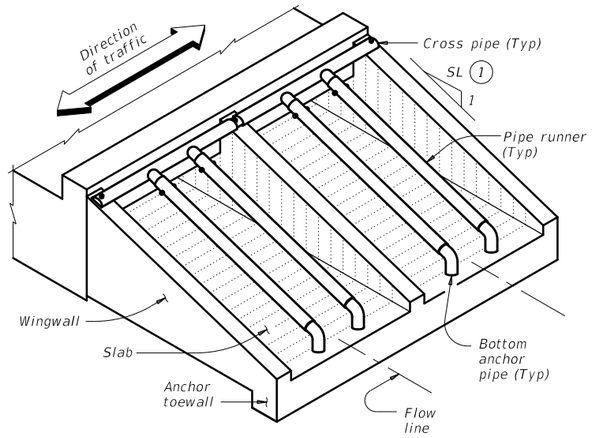

ISOMETRIC VIEW OF TYPICAL INSTALLATION

WING DIMENSION CALCULATIONS:

$Hw = H + T + C - 0.250'$

$Lw = (Hw - 0.333') (SL)$

For cast-in-place culverts:

$Atw = (N) (S) + (N + 1) (U)$

For precast culverts:

$Atw = (N) (2U + S) + (N - 1) (0.500')$

Total Wingwall Area (SF)
$= (0.5) (Hw + 0.333') (Lw) (N + 1)$

Total Concrete Volume (CY)
$= [(\text{Wingwall Area}) (0.583') +$
$(Lw) (Atw) (0.583') +$
$(Atw) (1.167') (1.167' - 0.583')] \div (27)$

PIPE RUNNER DIMENSION CALCULATIONS:

Pipe Runner Length
$= (Lw) (K1) - (1.917')$

Total Reinforcing (Lb)
$= (1.55) (Lw) (Atw) +$
$(4.43) (Atw) +$
$(K2) (Hw) (N + 1) (\sqrt{Lw})$

C = Height of curb above top of top slab (feet)
Hw = Height of wingwall (feet)
K = Constant value for use in formulas

Slope SL:1	K1	K2
3:1	~ 1.054 ~	7.45
4:1	~ 1.031 ~	8.49
6:1	~ 1.014 ~	10.30

Atw = Anchor toewall length (feet)
Lw = Length of wingwall (feet)
N = Number of culvert barrels
SL:1 = Side slope ratio (horizontal : 1 vertical)

See applicable box culvert standard for H, S, T, and U values.

MATERIAL NOTES:

Provide Grade 60 reinforcing steel.

Provide galvanized reinforcing steel if required elsewhere in the plans.

Adjust reinforcing as necessary to provide a minimum clear cover of 1 ½".

Provide Class "C" concrete (f`c = 3,600 psi).

Provide pipe runners, cross pipes, and anchor pipes meeting the requirements of ASTM A53 (Type E or S, Gr B), ASTM A500 Gr B, or API 5LX52.

Provide ASTM A307 bolts.

Galvanize all steel components, except the concrete reinforcing, unless required elsewhere in the plans, after fabrication.

Repair galvanizing damaged during transport or construction in accordance with the Item 445, "Galvanizing".

GENERAL NOTES:

Designed according to AASHTO LRFD Bridge Design Specifications.

The safety end treatments shown herein are intended for use in those installations where out of control vehicles are likely to traverse the openings approximately perpendicular to the pipe runners.

Pipe runners are designed for a traversing load of 1,800 pounds at yield as recommended by Research Report 280-1, "Safety Treatment of Roadside Cross-Drainage Structures", Texas Transportation Institute, March 1981.

The quantities for pipe runners, reinforcing steel, and concrete resulting from the formulas given herein are for Contractor's information only.

See the Box Culvert Supplement (BCS) standard sheet for additional dimensions and information.

Alternate design drawings bearing the seal of a professional engineer will be acceptable for precast construction of the safety end treatments.

Cover dimensions are clear dimensions, unless noted otherwise. Reinforcing dimensions are out-to-out of bars.

SECTION A-A

(Showing typical wingwall and wing slab reinforcing. Pipe runners not shown for clarity.)

AT TOP OF EXTERIOR WINGWALL

(Cast-in-place culvert)

AT TOP OF INTERIOR WINGWALL

(Cast-in-place culvert)

AT OUTSIDE OF BOTTOM SLAB

(Cast-in-place culvert)

AT INTERIOR WINGWALL

(Precast culvert)

PLAN VIEWS OF CORNER DETAILS

TABLE OF REINFORCING BAR SIZES AND SPACING

Bar	Size	Spacing
C	#4	10" Max
D	#4	Match F and E
E	#4	1'-0" Max
F	#4	1'-3" Max
G	#6	As shown
J	#4	10" Max
K	#4	1'-0" Max
R	#4	As shown

(1) Recommended values of slope are: 3:1, 4:1, and 6:1. Provide 3:1 or flatter slope.

(2) 0" Min to 5'-0" Max. Estimated curb heights are shown elsewhere in the plans. For structures without railing and curbs taller than 1'-0", refer to the Extended Curb Details (ECD) standard sheet.

(3) Wingwall and slab thicknesses may be the same as the adjacent culvert wall and slab thicknesses (7" minimum). If thicknesses greater than the minimum (7") are used, no changes will be made in quantities and no additional compensation will be allowed.

(4) For vehicle safety, reduce curb height, if necessary, to provide a maximum 3" projection. No changes will be made in quantities and no additional compensation will be allowed for this work.

(5) For culverts with C = 0", the precast culvert reinforcing may extend 1'-0" minimum into wingwall. Wingwall Bars D and R may be omitted. Otherwise, refer to the Wingwall Connection detail on the Box Culvert Precast Miscellaneous Details (SCP-MD) standard sheet.

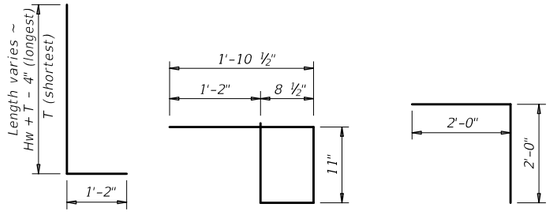

BARS J

BARS K
(Length = 4'-3")

BARS R

SHEET 1 OF 2

Texas Department of Transportation

Bridge Division Standard

SAFETY END TREATMENT

FOR 0° SKEW BOX CULVERTS (MAXIMUM Hw = 7'-0") TYPE I ~ CROSS DRAINAGE

SETB-CD

FILE: setbcdse-20.dgn	DN: GAF	CK: CAT	DW: TxDOT	CK: TxDOT
©TxDOT February 2020	CONT	SECT	JOB	HIGHWAY
REVISIONS	0912	73	215	FM 270, ETC
	DIST	COUNTY		SHEET NO.
	HOU	GALVESTON		227

DATE: 8/31/2023 10:22:02 AM
FILE: $FILE$

DISCLAIMER:
The use of this standard is governed by the "Texas Engineering Practice Act". No warranty of any kind is made by TxDOT for any purpose whatsoever. TxDOT assumes no responsibility for the conversion of this standard to other formats or for incorrect results or damages resulting from its use.

DATE: 8/31/2023 10:22:03 AM
FILE: $FILE$

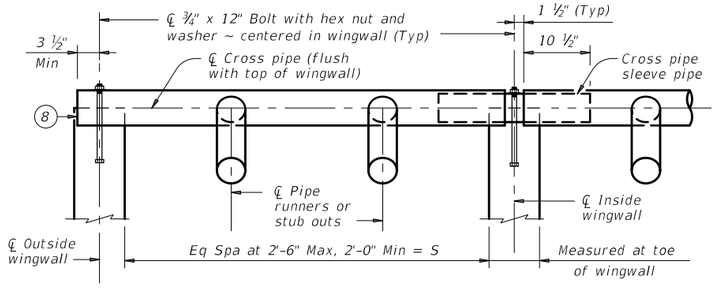

NOTE: At Contractor's option, make the cross pipe continuous across the inside wingwalls. If option is selected, omit the sleeve pipe and make a $^{15}/_{16}$" diameter through hole in the cross pipe to accept the anchor bolt at the centerline of each inside wingwall.

CROSS PIPE INSTALLATION DETAILS

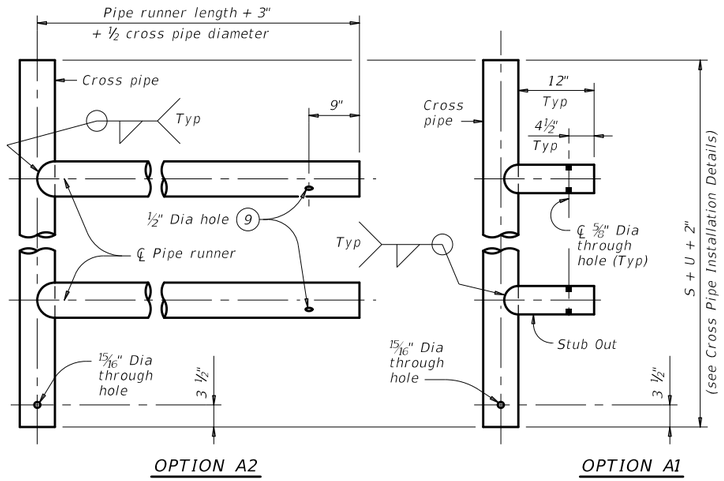

OPTION A2 OPTION A1

FOR USE IN OUTSIDE CULVERT BAY

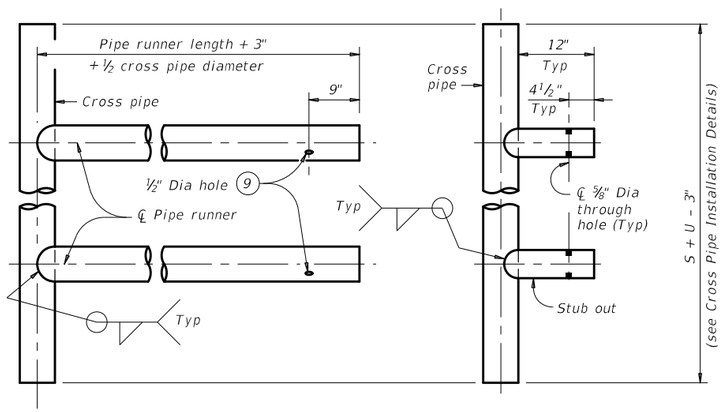

OPTION A2 OPTION A1

FOR USE IN INSIDE CULVERT BAY

CROSS PIPE AND CONNECTIONS DETAILS

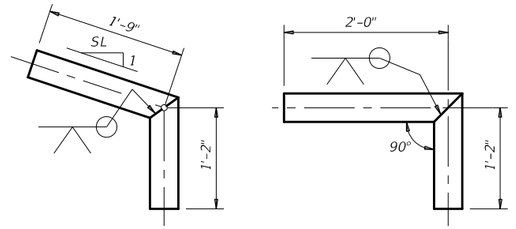

OPTION A OPTION B

BOTTOM ANCHOR PIPE DETAILS (10)

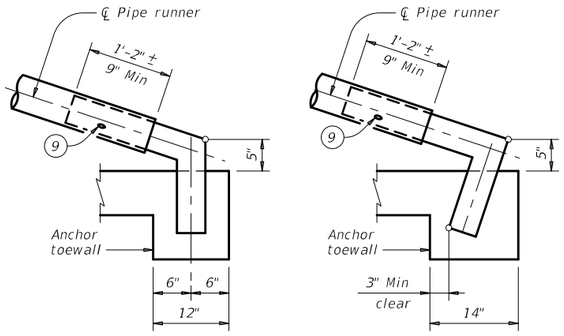

OPTION B1 OPTION B2

BOTTOM ANCHOR TOEWALL DETAILS

(Wingwall not shown for clarity.)

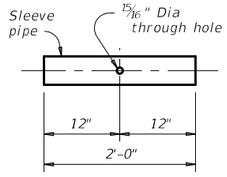

CROSS PIPE SLEEVE PIPE DETAILS

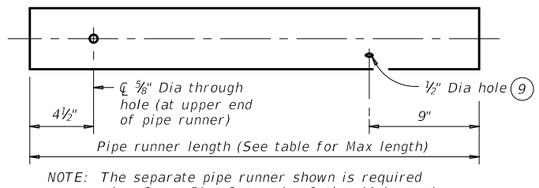

NOTE: The separate pipe runner shown is required when Cross Pipe Connection Option A1 is used.

PIPE RUNNER DETAILS

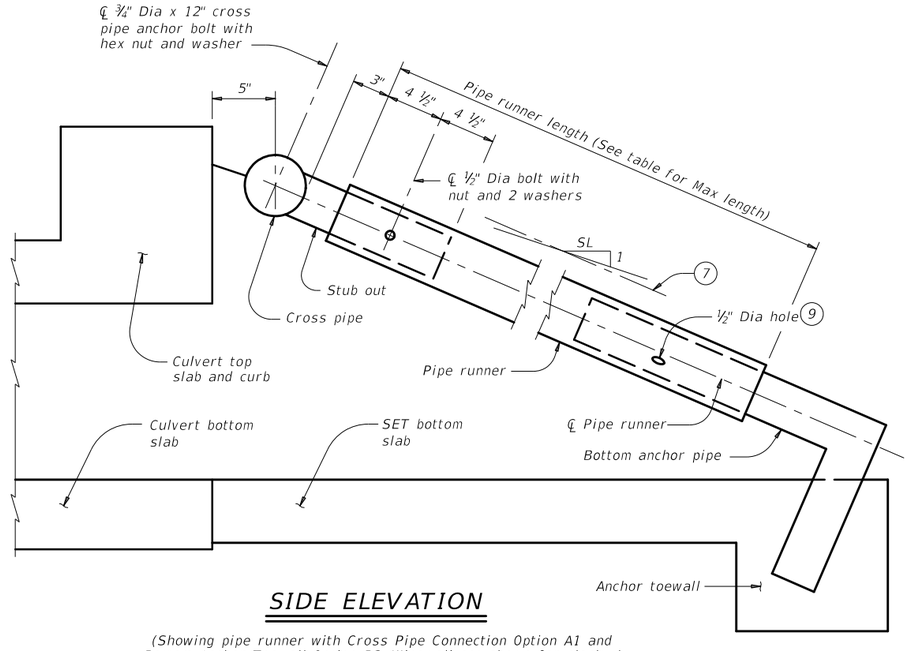

SIDE ELEVATION

(Showing pipe runner with Cross Pipe Connection Option A1 and Bottom Anchor Toewall Option B2. Wingwall not shown for clarity.)

(6) Cross pipe is the same size as the pipe runner. Cross pipe stub out is the same size as the anchor pipe.

(7) Note that actual slope of safety pipe runner may vary slightly from side slope.

(8) Take care to ensure that riprap concrete does not flow into the cross pipe so as to permit disassembly of the bolted connection to allow cleanout access.

(9) After installation, inspect the 1#2" hole to ensure that the lap of the safety pipe runner with the bottom anchor pipe is adequate.

(10) At fabricator's option, a heat bend to a smooth 5" radius or a manufactured elbow (of the same material as the runner) may be substituted for the mitered and welded joint in the bottom anchor pipe.

MAXIMUM PIPE RUNNER LENGTHS AND (6) REQUIRED PIPE RUNNER AND ANCHOR PIPE SIZES

Maximum Pipe Runner Length	Required Pipe Runner Size			Required Anchor Pipe Size		
	Pipe Size	Pipe O.D.	Pipe I.D.	Pipe Size	Pipe O.D.	Pipe I.D.
10'- 0"	3" STD	3.500"	3.068"	2" STD	2.375"	2.067"
19'- 8"	4" STD	4.500"	4.026"	3" STD	3.500"	3.068"
34'- 2"	5" STD	5.563"	5.047"	4" STD	4.500"	4.026"

SHEET 2 OF 2

Texas Department of Transportation

Bridge Division Standard

SAFETY END TREATMENT

FOR 0° SKEW BOX CULVERTS
(MAXIMUM Hw = 7'-0")
TYPE I ~ CROSS DRAINAGE

SETB-CD

FILE: setbcdse-20.dgn	DN: GAF	CK: CAT	DW: TxDOT	CK: TxDOT
©TxDOT February 2020 REVISIONS	CONT	SECT	JOB	HIGHWAY
	0912	73	215	FM 270, ETC
	DIST	COUNTY		SHEET NO.
	HOU	GALVESTON		228

DISCLAIMER:
The use of this standard is governed by the "Texas Engineering Practice Act". No warranty of any kind is made by TxDOT for any purpose whatsoever. TxDOT assumes no responsibility for the conversion of this standard to other formats or for incorrect results or damages resulting from its use.

DATE:
FILE:

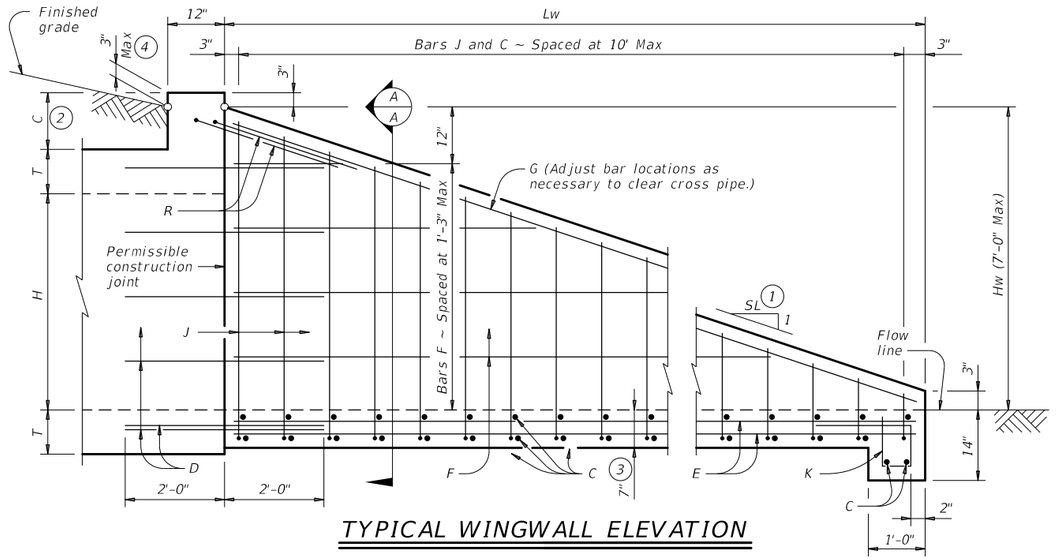

TYPICAL WINGWALL ELEVATION

(Cross pipes not shown for clarity.)

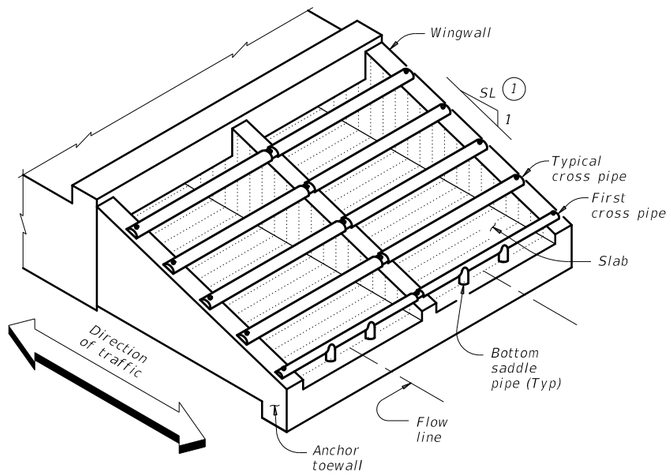

ISOMETRIC VIEW OF TYPICAL INSTALLATION

(Showing bolted anchor option.)

WING DIMENSION CALCULATIONS:

$Hw = H + T + C - 0.250'$

$Lw = (Hw - 0.250')\ (SL)$

For cast-in-place culverts:

$Atw = (N)\ (S) + (N + 1)\ (U)$

For precast culverts:

$Atw = (N)\ (2U + S) + (N - 1)\ (0.500')$

Total Wingwall Area (SF)
$= (0.5)\ (Hw + 0.250')\ (Lw)\ (N - 1)$

Total Concrete Volume (CY)
$= [(\text{Wingwall Area})\ (0.583') +$
$(Lw)\ (Atw)\ (0.583') +$
$(Atw)\ (1.000')\ (1.167' - 0.583')] \div (27)$

Total Reinforcing (Lb)
$= (1.55)\ (Lw)\ (Atw) +$
$(4.43)\ (Atw) +$
$(K)\ (Hw)\ (N + 1)\ (\sqrt{Lw})$

C = Height of curb above top of top slab (feet)
Hw = Height of wingwall (feet)
K = Constant value for use in formulas

Slope SL:1	K
6:1 ~	10.41

Atw = Anchor toewall length (feet)
Lw = Length of wingwall (feet)
N = Number of culvert barrels
SL:1 = Side slope ratio (horizontal : 1 vertical)

See applicable box culvert standard for H, S, T, and U values.

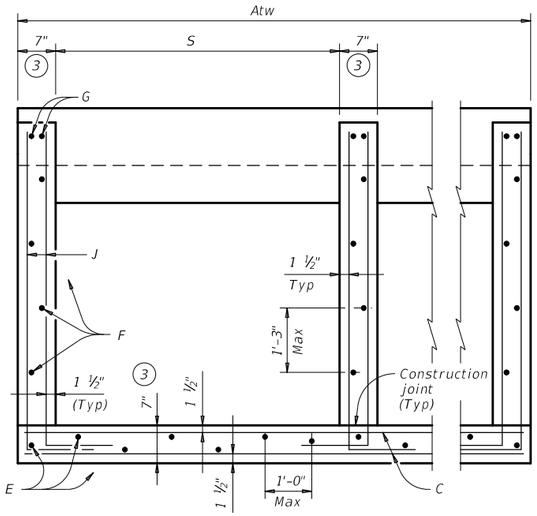

SECTION A-A

(Showing typical wingwall and wing slab reinforcing. Pipe runners not shown for clarity.)

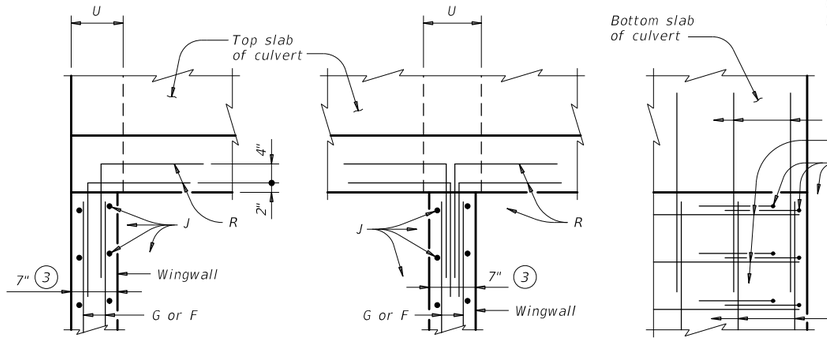

AT TOP OF EXTERIOR WINGWALL

(Cast-in-place culvert)

AT TOP OF INTERIOR WINGWALL

(Cast-in-place culvert)

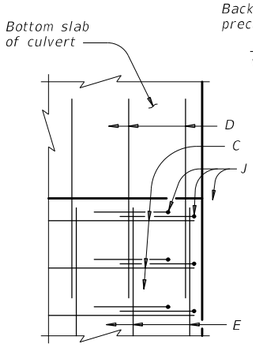

AT OUTSIDE OF BOTTOM SLAB

(Cast-in-place culvert)

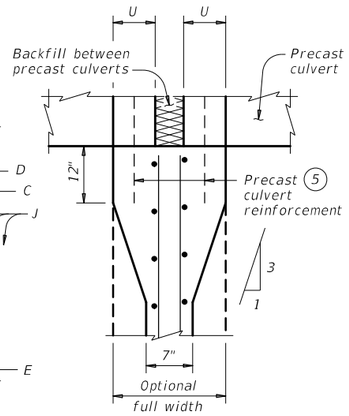

AT INTERIOR WINGWALL

(Precast culvert)

PLAN VIEWS OF CORNER DETAILS

MATERIAL NOTES:

Provide Grade 60 reinforcing steel.
Provide galvanized reinforcing steel if required elsewhere in the plans.
Adjust reinforcing as necessary to provide a minimum clear cover of 1½".
Provide Class "C" concrete (f`c = 3,600 psi).
Provide pipe runners, cross pipes, and anchor pipes meeting the requirements of ASTM A53 (Type E or S, Gr B), ASTM A500 Gr B, or API 5LX52.
Provide ASTM A307 bolts.
Galvanize all steel components, except the concrete reinforcing, unless required elsewhere in the plans, after fabrication.
Repair galvanizing damaged during transport or construction in accordance with Item 445, "Galvanizing."

GENERAL NOTES:

Designed according to AASHTO LRFD Bridge Design Specifications.
The safety end treatments shown herein are intended for use in those installations where out of control vehicles are likely to traverse the openings approximately perpendicular to the cross pipes.
Cross pipes are designed for a traversing load of 10,000 pounds at yield as recommended by Research Report 280-2F, "Safety Treatment of Roadside Parallel-Drainage Structures", Texas Transportation Institute, March 1981.
The quantities for concrete, reinforcing steel, and cross pipes resulting from the formulas given herein are for Contractor's information only.
See the Box Culvert Supplement (BCS) standard sheet for additional dimensions and information.
Alternate design drawings bearing the seal of a professional engineer will be acceptable for precast construction of the safety end treatments.

Cover dimensions are clear dimensions, unless noted otherwise. Reinforcing dimensions are out-to-out of bars.

TABLE OF REINFORCING BAR SIZES AND SPACING

Bar	Size	Spacing
C	#4	10" Max
D	#4	Match F and E
E	#4	1'- 0" Max
F	#4	1'- 3" Max
G	#6	As shown
J	#4	10" Max
K	#4	1'- 0" Max
R	#4	As shown

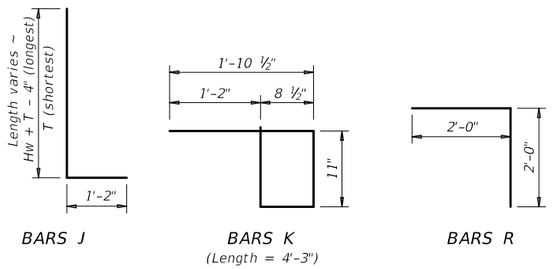

BARS J BARS K BARS R

(Length = 4'-3")

1. Provide 6:1 or flatter slope.
2. 0" Min to 5'-0" Max. Estimated curb heights are shown elsewhere in the plans. For structures without railing and curbs taller than 1'-0", refer to Extended Curb Details the Extended Curb Details (ECD) standard sheet.
3. Wingwall and slab thicknesses may be the same as the adjacent culvert wall and slab thicknesses (7" Minimum). If thicknesses greater than the minimum (7") are used, no changes will be made in quantities and no additional compensation will be allowed.
4. For vehicle safety, reduce height, if necessary, to provide a maximum 3" projection above finished grade. No changes will be made in quantities and no additional compensation will be allowed for this work.
5. For culverts with C = 0", the precast culvert reinforcing may extend 1'-0" minimum into wingwall. Wingwall bars D and R may be omitted. Otherwise, refer to the Wingwall Connection detail on the Box Culvert Precast Miscellaneous Details (SCP-MD) standard sheet.

SHEET 1 OF 2

Texas Department of Transportation

Bridge Division Standard

SAFETY END TREATMENT

FOR BOX CULVERTS (MAXIMUM Hw = 7'-0") TYPE I ~ PARALLEL DRAINAGE

SETB-PD

FILE: setbpdse-22.dgn	DN: GAF	CK: CAT	DW: TxDOT	CK: TxDOT
©TxDOT February 2020	CONT	SECT	JOB	HIGHWAY
REVISIONS 06-2022 ~ Wing dimesions	0912			FM 270, ETC
	DIST	COUNTY		SHEET NO.
	HOUS	GALVESTON		229

DISCLAIMER:
The use of this standard is governed by the "Texas Engineering Practice Act". No warranty of any kind is made by TxDOT for any purpose whatsoever. TxDOT assumes no responsibility for the conversion of this standard to other formats or for incorrect results or damages resulting from its use.

DATE:
FILE:

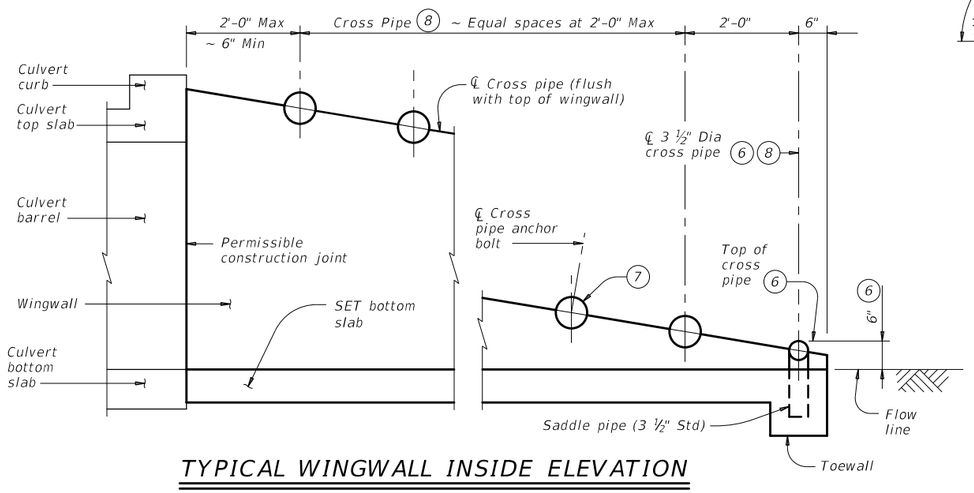

TYPICAL WINGWALL INSIDE ELEVATION

(Showing installation of cross pipes.)

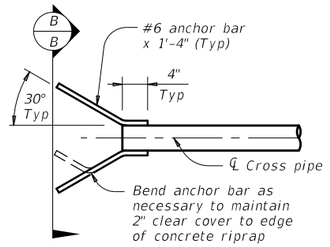

PART PLAN

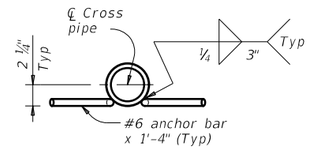

SECTION B-B

OPTIONAL ANCHOR BAR DETAILS

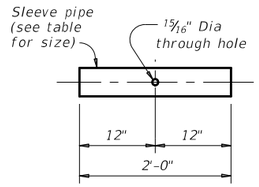

SLEEVE PIPE DETAILS (9)

REQUIRED PIPE SIZES (8)		
Culvert Span Sizes	Cross Pipe Size	Sleeve Pipe Size (9)
First Pipe	3 ½" STD	2 ½" STD
30" to 42"	4" STD	3" STD
48" to 72"	5" STD	4" STD
78" to 120"	6" STD	5" STD

STANDARD PIPE SIZES		
Pipe Size	Pipe O.D.	Pipe I.D.
2 ½" STD	2.875"	2.469"
3" STD	3.500"	3.068"
3 ½" STD	4.000"	3.548"
4" STD	4.500"	4.026"
5" STD	5.563"	5.047"
6" STD	6.625"	6.065"

(6) The proper installation of the first cross pipe is critical for vechicle saftey. Place the top of the first cross pipe at no more than 6" above the flow line.

(7) Always install the third cross pipe from the bottom of the culvert using a bolted connection. Take care to ensure that concrete does not flow into this cross pipe so as to permit disassembly of the bolted connection to allow cleanout access.

(8) Provide cross pipes and sleeve pipes (if required) as shown in the Required Pipe Sizes table. Provide 3 1#2" saddle pipes for the 3 1#2" first cross pipe.

(9) At Contractor's option, make the cross pipe continuous across the inside wingwalls. If this option is selected, omit the sleeve pipe and make a 15#16" diameter throughhole in the cross pipe to accept the anchor bolt at the centerline of each interior wingwall.

(10) Provide riprap when using the Optional Anchor Bar details. Riprap is included in the bid price for Safety End Treatment. Provide riprap in accordance with Item 432, "Riprap".

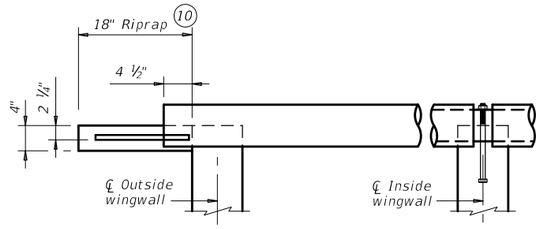

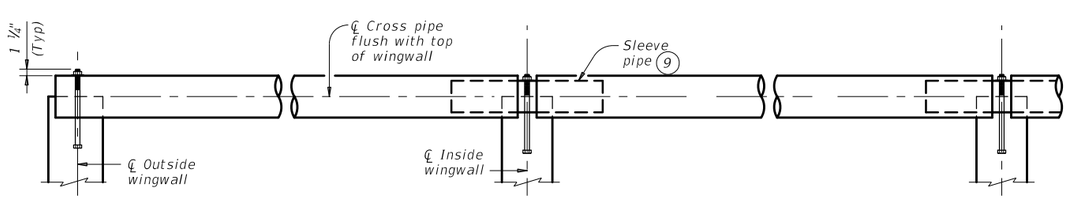

SECTION THROUGH INSTALLATION OF TYPICAL FULL CROSS PIPE

(Anchor details and dimensions are similar to those shown below in Section Through Installation of 3 ½" First Cross Pipe detail.)

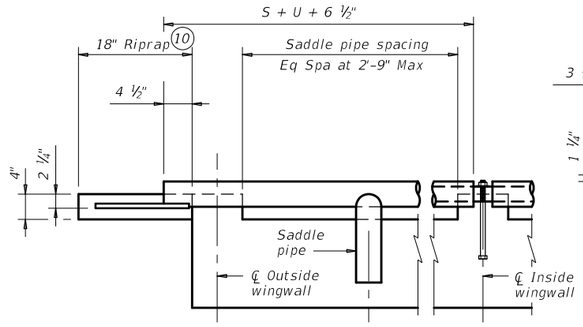

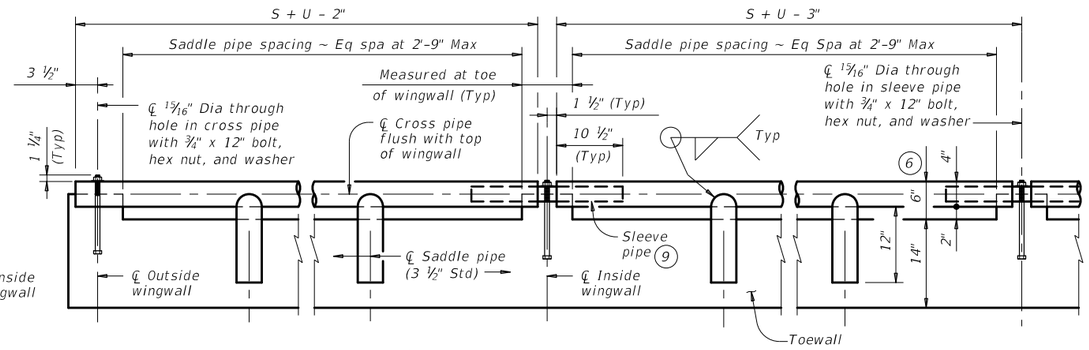

SECTION THROUGH INSTALLATION OF 3 ½" FIRST CROSS PIPE

OUTSIDE CULVERT BARREL WITH OPTIONAL ANCHOR BARS & RIPRAP

OUTSIDE CULVERT BARREL WITH BOLTED ANCHOR

INSIDE CULVERT BARREL

CROSS PIPE INSTALLATION DETAILS

SHEET 2 OF 2

Texas Department of Transportation

Bridge Division Standard

SAFETY END TREATMENT

FOR BOX CULVERTS
(MAXIMUM Hw = 7'-0")
TYPE I ~ PARALLEL DRAINAGE

SETB-PD

FILE: setbpdse-22.dgn	DN: GAF	CK: CAT	DW: TxDOT	CK: TxDOT
©TxDOT February 2020	CONT	SECT	JOB	HIGHWAY
REVISIONS 06-2022 ~ Wing dimesions	0912			FM 270, ETC
	DIST	COUNTY		SHEET NO.
	HOUS	GALVESTON		230

DISCLAIMER:
The use of this standard is governed by the "Texas Engineering Practice Act". No warranty of any kind is made by TxDOT for any purpose whatsoever. TxDOT assumes no responsibility for the conversion of this standard to other formats or for incorrect results or damages resulting from its use.

DATE: 8/31/2023 10:22:07 AM
FILE: $FILE$

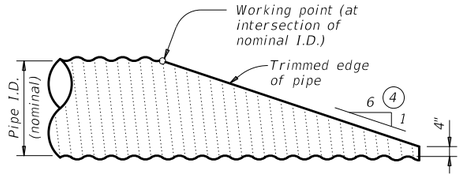

NOTE: All cross pipes, calculations, and dimensions are based on the pipe culverts mitered as shown in this detail. Alternate styles of mitered ends will require that appropriate adjustments be made to the values presented on this standard.

SIDE ELEVATION OF TYPICAL PIPE CULVERT MITER

(Showing corrugated metal pipe (CMP) culvert Details at reinforced concrete pipe (RCP) culvert are similar.)

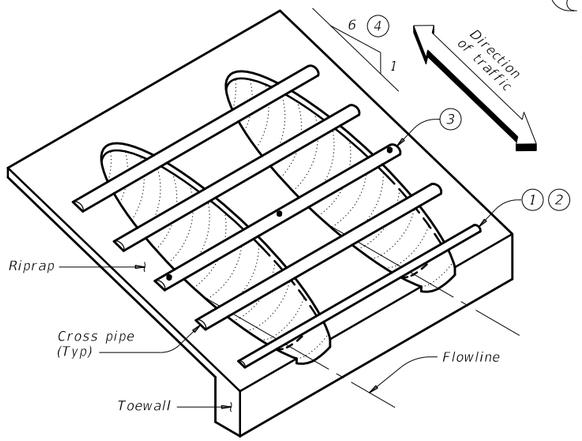

ISOMETRIC VIEW OF TYPICAL INSTALLATION

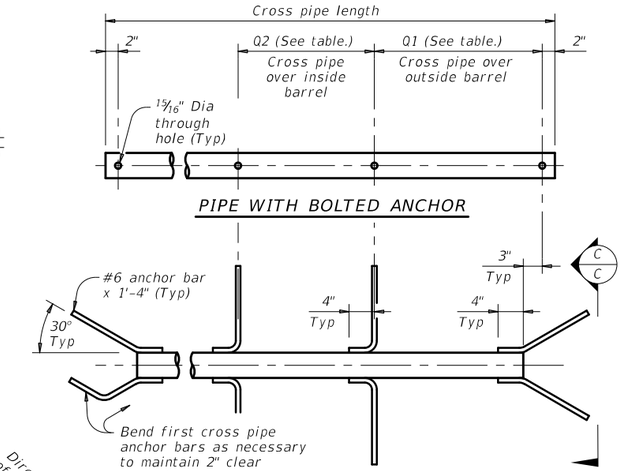

PIPE WITH BOLTED ANCHOR

PIPE WITH ANCHOR BARS

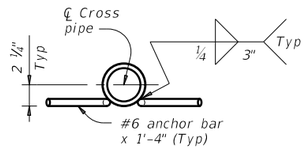

SECTION C-C

CROSS PIPE DETAILS

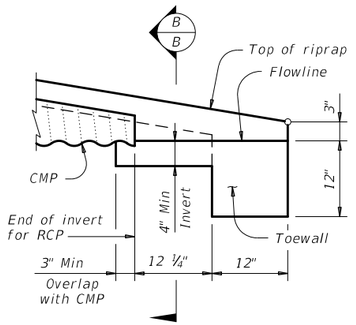

DETAIL "A"

(Showing invert with corrugated metal pipe (CMP) culvert. Reinforced concrete pipe (RCP) culvert details are similar. Cross pipes not shown for clarity.)

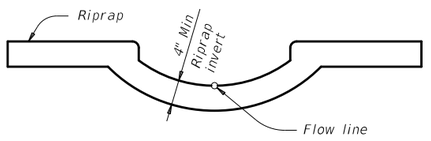

SECTION B-B

(Cross pipes not shown for clarity.)

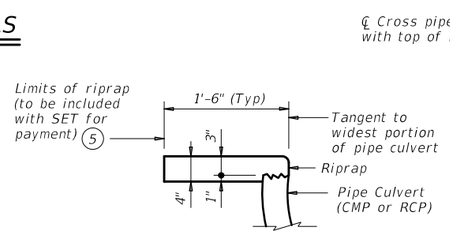

SHOWING TYPICAL PIPE CULVERT AND RIPRAP

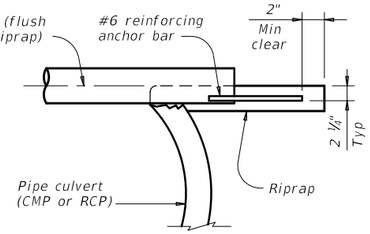

SHOWING CROSS PIPE WITH ANCHOR BAR

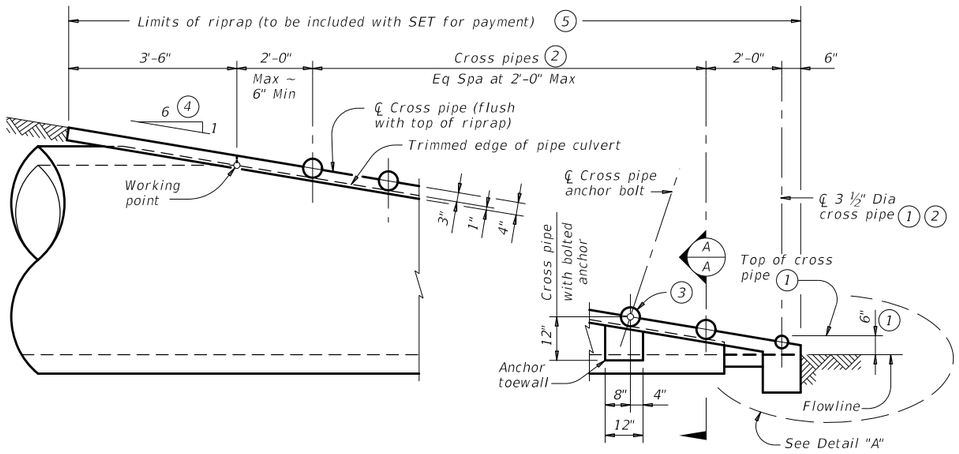

SIDE ELEVATION OF CAST-IN-PLACE CONCRETE

(Showing reinforced concrete pipe (RCP) culvert. Details at corrugated metal pipe (CMP) culvert are similar.)

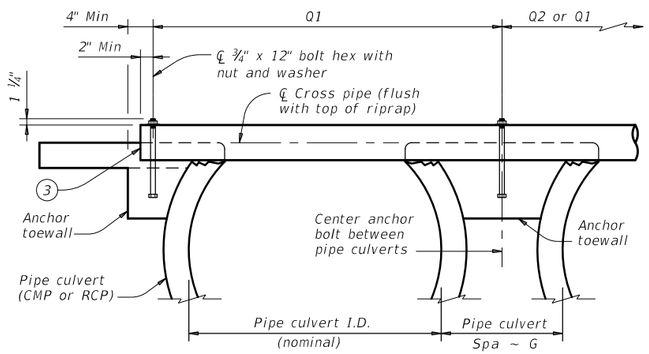

SHOWING CROSS PIPE WITH BOLTED ANCHOR

SECTION A-A

CROSS PIPE LENGTHS, REQUIRED PIPE SIZES, AND RIPRAP QUANTITIES (2)

Nominal Culvert I.D.	Conc Riprap (CY) (6)	Pipe Culvert Spa ~ G	Single Barrel ~ Q1	Multi-Barrel ~ Q1	Q2	Conditions for Use of Cross Pipes	Cross Pipe Sizes
12"	0.6	0' - 9"	N/A	2' - 1"	1' - 9"	3 or more pipe culverts	3" Std (3.500" O.D.)
15"	0.7	0' - 11"	N/A	2' - 5"	2' - 2"		
18"	0.8	1' - 2"	N/A	2' - 10"	2' - 8"		
21"	0.9	1' - 4"	N/A	3' - 2"	3' - 1"		
24"	0.9	1' - 7"	N/A	3' - 6"	3' - 7"		
27"	1.0	1' - 8"	N/A	3' - 10"	3' - 11"	3 or more pipe culverts	3 1/2" Std (4.000" O.D.)
30"	1.1	1' - 10"	N/A	4' - 2"	4' - 4"	2 or more pipe culverts	
33"	1.2	1' - 11"	4' - 2"	4' - 5"	4' - 8"	All pipe culverts	
36"	1.3	2' - 1"	4' - 5"	4' - 9"	5' - 1"	All pipe culverts	4" Std (4.500" O.D.)
42"	1.5	2' - 4"	4' - 11"	5' - 5"	5' - 10"		
48"	1.7	2' - 7"	5' - 5"	6' - 0"	6' - 7"	All pipe culverts	5" Std (5.563" O.D.)
54"	2.0	3' - 0"	5' - 11"	6' - 9"	7' - 6"		
60"	2.2	3' - 3"	6' - 5"	7' - 4"	8' - 3"		
66"	2.4	3' - 3"	6' - 11"	7' - 10"	8' - 9"		
72"	2.7	3' - 4"	7' - 5"	8' - 5"	9' - 4"		

(1) The proper installation of the first cross pipe is critical for vehicle safety. Place the top of the first cross pipe no more than 6" above the flow line.

(2) Provide cross pipes, except the first bottom pipe, of the size shown in the table. Provide a 3 1#2" standard pipe (4" O.D.) for the first bottom pipe.

(3) Install the third cross pipe from the bottom of the culvert using a bolted connection. Ensure that riprap concrete does not flow into the cross pipe so as to permit disassembly of the bolted connection to allow cleanout access. At the Contractor's option, install all other cross pipes using the bolted connection details.

(4) Match cross slope as shown elsewhere in the plans. Cross slope of 6:1 or flatter is required for vehicle safety.

(5) Riprap placed beyond the limits shown will be paid for as concrete riprap in accordance with Item 432, "Riprap".

(6) Quantities shown are for one end of one reinforced concrete pipe (RCP) culvert. For multiple pipe culverts or for corrugated metal pipe (CMP) culverts, quantities will need to be adjusted. Riprap quantities are for contractor's information only.

MATERIAL NOTES:

Synthetic fibers listed on the "Fibers for Concrete" Material Producer List (MPL) may be used in lieu of steel reinforcing in riprap concrete unless noted otherwise.

Provide cross pipes that meet the requirements of ASTM A53 (Type E or S, Gr B), ASTM A500 (Gr B), or API 5LX52.

Provide ASTM A307 bolts and nuts.

Galvanize all steel components, except concrete reinforcing, after fabrication. Repair galvanizing damaged during transport or construction in accordance with the specifications.

GENERAL NOTES:

Cross pipes are designed for a traversing load of 10,000 pounds at yield as recommended by Research Report 280-2F, "Safety Treatment of Roadside Parallel-Drainage Structures", Texas Transportation Institute, March 1981.

Safety end treatments (SET) shown herein are intended for use in those installations where out of control vehicles are likely to traverse the openings approximately perpendicular to the cross pipes.

Construct concrete riprap and all necessary inverts in accordance with the requirements of Item 432, "Riprap".

Payment for riprap and toewall is included in the Price Bid for each Safety End Treatment.

Texas Department of Transportation

Bridge Division Standard

SAFETY END TREATMENT

FOR 12" DIA TO 72" DIA
PIPE CULVERTS
TYPE II ~ PARALLEL DRAINAGE

SETP-PD

FILE: setppdse-20.dgn	DN: GAF	CK: CAT	DW: JRP	CK: GAF
©TxDOT February 2020	CONT	SECT	JOB	HIGHWAY
REVISIONS	0912	73	215	FM 270, ETC
	DIST	COUNTY		SHEET NO.
	HOU	GALVESTON		231

DISCLAIMER:
The use of this standard is governed by the "Texas Engineering Practice Act". No warranty of any kind is made by TxDOT for any purpose whatsoever. TxDOT assumes no responsibility for the conversion of this standard to other formats or for incorrect results or damages resulting from its use.

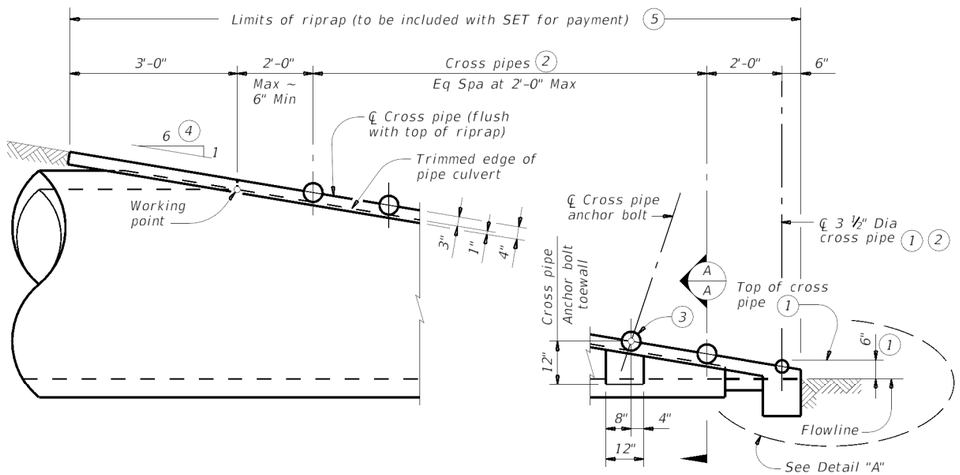

SIDE ELEVATION OF CAST-IN-PLACE CONCRETE

(Showing reinforced concrete pipe (RCP) culvert. Details of corrugated metal pipe (CMP) culvert are similar. pipe runners not shown for clarity.)

CROSS PIPE LENGTHS AND REQUIRED PIPE SIZES 2

Corrugated Metal Pipe (CMP) Culverts

Design	Conc Riprap (CY) 6	Pipe Culvert Span	Pipe Culvert Rise	Pipe Culvert Spa ~ G	Single Barrel ~ Q1	Multi-Barrel ~ Q1	Q2	Conditions for Use of Cross Pipes	Cross Pipe Sizes
1	0.6	17"	13"	1' – 0"	N/A	2' – 8"	2' – 5"	3 or more pipe culverts	3" Std (3.500" O.D.)
2	0.7	21"	15"	1' – 2"	N/A	3' – 1"	2' – 11"		
3	0.9	28"	20"	1' – 5"	N/A	3' – 9"	3' – 9"	3 or more pipe culverts	3 ½" Std (4.000" O.D.)
4	1.0	35"	24"	1' – 8"	4' – 4"	4' – 6"	4' – 7"	All pipe culverts	4" Std (4.500" O.D.)
5	1.2	42"	29"	1' – 11"	4' – 11"	5' – 2"	5' – 5"		
6	1.4	49"	33"	2' – 2"	5' – 6"	5' – 11"	6' – 3"	All pipe culverts	5" Std (5.563" O.D.)
7	1.6	57"	38"	2' – 5"	6' – 2"	6' – 8"	7' – 2"		
8	1.8	64"	43"	2' – 10"	6' – 9"	7' – 6"	8' – 2"		
9	1.9	71"	47"	3' – 2"	7' – 4"	8' – 3"	9' – 1"		

Reinforced Concrete Pipe (RCP) Culverts

Design	Conc Riprap (CY) 6	Pipe Culvert Span	Pipe Culvert Rise	Pipe Culvert Spa ~ G	Single Barrel ~ Q1	Multi-Barrel ~ Q1	Q2	Conditions for Use of Cross Pipes	Cross Pipe Sizes
1	0.6	22"	13 ½"	1' – 0"	N/A	3' – 1"	2' – 10"	3 or more pipe culverts	3" Std (3.500" O.D.)
2	0.7	26"	15 ½"	1' – 2"	N/A	3' – 6"	3' – 4"		
3	0.9	28 ½"	18"	1' – 5"	N/A	3' – 10"	3' – 9 ½"	3 or more pipe culverts	3 ½" Std (4.000" O.D.)
4	1.0	36 ¼"	22 ½"	1' – 8"	4' – 5"	4' – 7"	4' – 8 ¼"	All pipe culverts	4" Std (4.500" O.D.)
5	1.2	43 ¾"	26 ⅝"	1' – 11"	5' – 1"	5' – 4"	5' – 6 ¾"		
6	1.4	51 ½"	31 ⅝"	2' – 2"	5' – 8"	6' – 1"	6' – 5 ¼"	All pipe culverts	5" Std (5.563" O.D.)
7	1.6	58 ½"	36"	2' – 5"	6' – 4"	6' – 10"	7' – 3 ½"		
8	1.8	65"	40"	2' – 10"	6' – 10"	7' – 7"	8' – 3"		
9	1.9	73"	45"	3' – 2"	7' – 6"	8' – 5"	9' – 3"		

1. The proper installation of the first cross pipe is critical for vehicle safety. Place the top of the first cross pipe no more than 6" above the flow line.
2. Provide cross pipes, except the first bottom pipe, of the size shown in the table. Provide a 3 1#2" standard pipe (4" O.D.) for the first bottom pipe.
3. Install the third Cross Pipe from the bottom of the culvert using a bolted connection. Ensure that riprap concrete does not flow into the cross pipe so as to permit disassembly of the bolted connection to allow cleanout access. At the Contractor's option, install all other cross pipes using the bolted connection details.
4. Match cross slope as shown elsewhere in the plans. Cross slope of 6:1 or flatter is required for vehicle safety.
5. Riprap placed beyond the limits shown will be paid as concrete riprap in accordance with Item 432, "Riprap."
6. Quantities shown are for one end of one pipe culvert. For multiple Pipe Culverts, quantities will need to be adjusted. Riprap quantities are for Contractor's information only.

MATERIAL NOTES:

Synthetic fibers listed on the "Fibers for Concrete" Material Producer List (MPL) may be used in lieu of steel reinforcing in riprap concrete unless noted otherwise.

Provide cross pipes that meet the requirements of ASTM A53 (Type E or S, Gr B), ASTM A500 Gr B, or API 5LX52.

Provide ASTM A307 bolts and nuts.

Galvanize all steel components, except concrete reinforcing, after fabrication. Repair galvanizing damaged during transport or construction in accordance with the specifications.

GENERAL NOTES:

Pipe runners are designed for a traversing load of 10,000 pounds at yield as recommended by Research Report 280-2F, "Safety Treatment of Roadside Parallel-Drainage Structures", Texas Transportation Institute, March 1981.

Safety end treatments (SET) shown herein are intended for use in those installations where out of control vehicles are likely to traverse the openings approximately perpendicular to the Pipe Runners.

Construct concrete riprap and all necessary inverts in accordance with the requirements of Item 432, "Riprap."

Payment for riprap and toewall is included in the price bid for each safety end treatment.

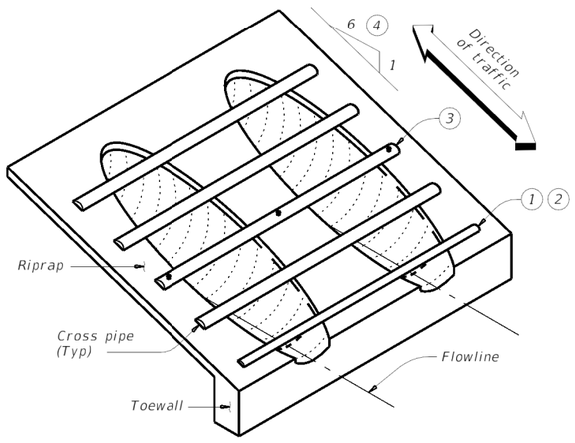

ISOMETRIC VIEW OF TYPICAL INSTALLATION

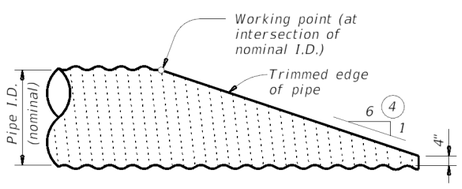

NOTE: All cross pipes, calculations, and dimensions are based on the pipe culverts mitered as shown in this detail. Alternate styles of mitered ends will require that appropriate adjustments be made to the values presented on this standard.

SIDE ELEVATION OF TYPICAL PIPE CULVERT MITER

(Showing corrugated metal pipe (CMP) culvert. Details at reinforced concrete pipe (RCP) culvert are similar.)

SHEET 1 OF 2

Texas Department of Transportation

Bridge Division Standard

SAFETY END TREATMENT
FOR DESIGN 1 TO 9
ARCH PIPE CULVERTS
TYPE II ~ PARALLEL DRAINAGE

SETP-PD-A

FILE:	DN: GAF	CK: TxDOT	DW: JRP	CK: GAF
©TxDOT February 2020	CONT	SECT	JOB	HIGHWAY
REVISIONS	0912	73	215	FM 270, ETC
	DIST	COUNTY		SHEET NO.
	HOU	GALVESTON		232

DATE: 8/31/2023 10:38:53 AM
FILE: $FILE$

DISCLAIMER:
The use of this standard is governed by the "Texas Engineering Practice Act". No warranty of any kind is made by TxDOT for any purpose whatsoever. TxDOT assumes no responsibility for the conversion of this standard to other formats or for incorrect results or damages resulting from its use.

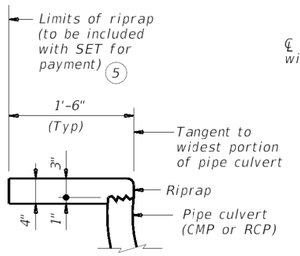

SHOWING TYPICAL PIPE CULVERT AND RIPRAP

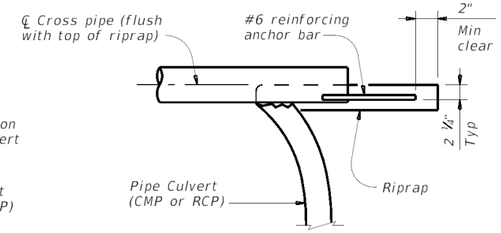

SHOWING CROSS PIPE WITH ANCHOR BAR

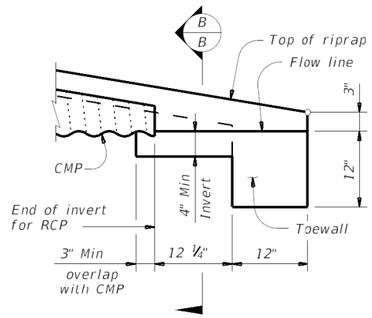

DETAIL "A"

(Showing invert with corrugated metal pipe (CMP) culvert. Reinforced concrete pipe (RCP) culvert details are similar. Cross pipes not shown for clarity.)

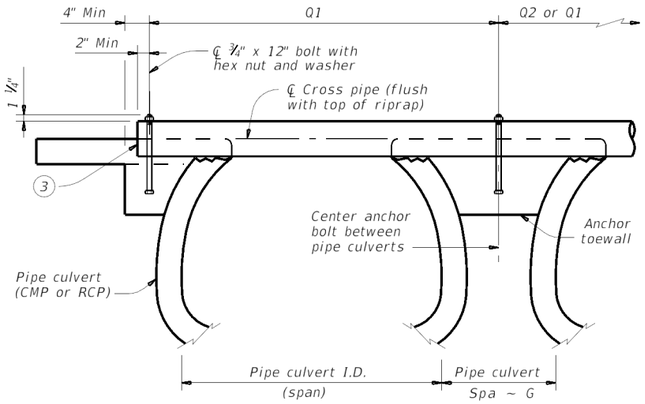

SHOWING CROSS PIPE WITH BOLTED ANCHOR

SECTION A-A

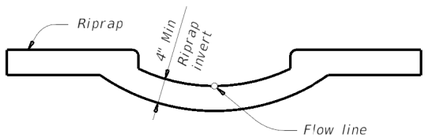

SECTION B-B

(Cross pipes not shown for clarity.)

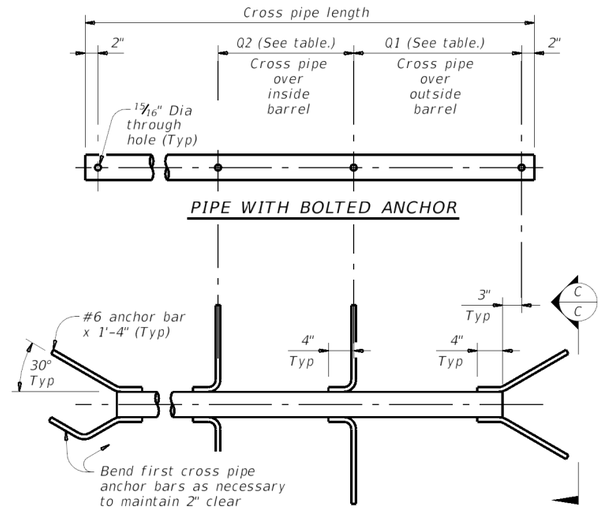

PIPE WITH ANCHOR BARS

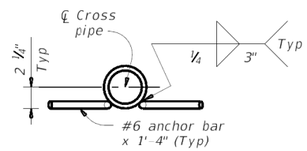

SECTION C-C

CROSS PIPE DETAILS

SHEET 2 OF 2

Texas Department of Transportation

Bridge Division Standard

SAFETY END TREATMENT
FOR DESIGN 1 TO 9 ARCH PIPE CULVERTS TYPE II ~ PARALLEL DRAINAGE
SETP-PD-A

FILE:	DN: GAF	CK: TxDOT	DW: JRP	CK: GAF
©TxDOT February 2020	CONT	SECT	JOB	HIGHWAY
REVISIONS	0912	73	215	FM 270, ETC
	DIST	COUNTY		SHEET NO.
	HOU	GALVESTON		233

DATE: 8/31/2023 10:39:43 AM
FILE: $FILE$

Culvert Station and/or Creek Name followed by applicable end (Lt, Rt or Both)	Description of Box Culvert No. Spans ~ Span X Height	Max Fill Height (Ft)	Applicable Box Culvert Standard (4)	Applicable Wingwall or End Treatment Standard	Skew Angle (0°,15°, 30° or 45°)	Side Slope or Channel Slope Ratio (SL:1)	T Culvert Top Slab Thickness (In)	U Culvert Wall Thickness (In)	C Estimated Curb Height (Ft)	Hw (1) Height of Wingwall (Ft)	A Curb to End of Wingwall (Ft)	B Offset of End of Wingwall (Ft)	Lw Length of Longest Wingwall (Ft)	Ltw Culvert Toewall Length (Ft)	Atw Anchor Toewall Length (Ft)	Riprap Apron (CY)	Class "C" (2) Conc (Curb) (CY)	Class "C" (3) Conc (Wingwall) (CY)	Total Wingwall Area (SF)
FM 270 - 219+32.12 to 222+26.02 (Both)	1 ~ 4'x 2'	8'	SCP-5	SETB-CD	30°	3:1	6"	6"	1.000'	3.250'	8.750'	8.750'	12.374'	6.928'	14.524'	0.0	0.6	8.2	N/A
FM 270 - 228+10.13 to 231+14.33 (Both)	1 ~ 5'x 2'	8'	SCP-5	SETB-FW-S	30°	3:1	6"	6"	1.000'	3.250'	8.750'	8.750'	12.374'	6.928'	14.524'	0.0	0.6	8.2	N/A
FM 270 - 228+56.53 to 229+34.89 (Both)	1 ~ 5'x 2'	8'	SCP-5	SETB-FW-S	30°	3:1	6"	6"	1.000'	3.250'	8.750'	8.750'	12.374'	6.928'	14.524'	0.0	0.6	8.2	N/A
FM 270 - 231+25.76 to 231+91.01 (Both)	1 ~ 3'x 2'	8'	SCP-3	SETB-PD	0°	6:1	4"	4"	0.500'	2.583'	N/A	N/A	14.000'	N/A	4.167'	0.0	0.2	4.4	N/A
FM 270 - 232+32.08 to 236+54.67 (Rt)	1 ~ 5'x 2'	8'	SCP-5	SETB-FW-S	30°	3:1	6"	6"	1.000'	3.250'	8.750'	8.750'	12.374'	6.928'	14.524'	0.0	0.3	4.1	N/A
SH 96 - 339+31.12 to 339+67.16 (Both)	2 ~ 8'x 6'	8'	SCP-8	FW-0	0°	3:1	8"	8"	1.000'	7.417'	21.250'	12.269'	24.537'	N/A	N/A	19.0	1.4	23.8	380

NOTES:
Skew = 0° on SW-0, FW-0, SETB-CD, SETB-SW-0, and SETB-FW-0 standard sheets;
30° maximum for safety end treatment

SL:1 = Horizontal : 1 Vertical
- Side slope at culvert for flared or straight wingwalls.
- Channel slope for parallel wingwalls.
- Slope must be 3:1 or flatter for safety end treatments.

T = Box culvert top slab thickness. Dimension can be found on the applicable box culvert standard sheet.

U = Box culvert wall thickness. Dimension can be found on the applicable box culvert standard sheet.

C = Curb height

See applicable wing or end treatment standard sheets for calculations of Hw, A, B, Lw, Ltw, Atw, and Total Wingwall Area.

Hw = Height of wingwall

A = Distance from face of curb to end of wingwall (not applicable to parallel or straight wingwalls)

B = Offset of end of wingwall (not applicable to parallel or straight wingwalls)

Lw = Length of longest wingwall.

Ltw = Length of culvert toewall (not applicable when using riprap apron)

Atw = Length of anchor toewall (applicable to safety end treatment only)
Total Wingwall Area = Wingwall area in sq. ft. for two wingwalls (one structure end) if Lt or Rt.
Area for four wingwalls (two structure ends) if Both.

(1) Round the wall heights shown to the nearest foot for bidding purposes.

(2) Concrete volume shown is for box culvert curb only. For curbs using the Box Culvert Rail Mounting Details (RAC) standard sheet quantities shown must be increased by a factor of 2.25. If Class S concrete is required for the top slab of the culvert, also provide Class S concrete for the curb. Curb concrete is considered part of the Box Culvert for payment.

(3) Concrete volume shown is total of wings, footings, culvert toewall (if any), anchor toewalls (if any) and wingwall toewalls. Riprap aprons, culverts, and curb quantities are not included.

(4) Regardless of the type of culvert shown on this sheet, the Contractor has the option of furnishing cast-in-place or precast culverts unless otherwise shown elsewhere on the plans. If the Contractor elects to provide culverts of a different type than those shown on this sheet, it is the Contractor's responsibility to make the necessary adjustments to the dimensions and quantities shown.

SPECIAL NOTE:

This sheet is a supplement to the box culvert standards. It is to be filled out by the culvert specifier and provides dimensions for the construction of the box culvert wingwalls and safety end treatments.

An Excel 2010 spreadsheet to assist in completing this table can be downloaded from the Bridge Standards (English) web page on the TxDOT web site. The completed sheet must be signed, sealed, and dated by a licensed Professional Engineer.

DISCLAIMER:
The use of this standard is governed by the "Texas Engineering Practice Act". No warranty of any kind is made by TxDOT for any purpose whatsoever. TxDOT assumes no responsibility for the conversion of this standard to other formats or for incorrect results or damages resulting from its use.

DATE: 8/31/2023 10:22:10 AM
FILE: $FILE$

Texas Department of Transportation

Bridge Division Standard

BOX CULVERT SUPPLEMENT
WINGS AND END TREATMENTS

BCS

FILE: bcsstde1-20.dgn	DN: TxDOT	CK: TxDOT	DW: TxDOT	CK: TxDOT
©TxDOT February 2020	CONT	SECT	JOB	HIGHWAY
REVISIONS	0912	73	215	FM 270, ETC
	DIST	COUNTY		SHEET NO.
	HOU	GALVESTON		234

DISCLAIMER:
The use of this standard is governed by the "Texas Engineering Practice Act". No warranty of any kind is made by TxDOT for any purpose whatsoever. TxDOT assumes no responsibility for the conversion of this standard to other formats or for incorrect results or damages resulting from its use.

DATE:
FILE:

TABLE OF DIMENSIONS AND REINFORCING STEEL
(Wings for one structure end)

Dimensions					Variable Reinforcing				Estimated Quantities per ft of wing length (2~wings) (3)	
					Bars J1		Bars J2			
Maximum Wingwall Height Hw	W	X	Y	Z	Size	Spa	Size	Spa	Reinf (Lb/Ft)	Conc (CY/Ft)
2'-6"	2'-5"	1'-0"	9"	7"	#4	1'-0"	#4	1'-0"	33.73	0.248
3'-0"	2'-5"	1'-0"	9"	7"	#4	1'-0"	#4	1'-0"	37.07	0.261
3'-6"	2'-5"	1'-0"	9"	7"	#4	1'-0"	#4	1'-0"	37.74	0.273
4'-0"	2'-5"	1'-0"	9"	7"	#4	1'-0"	#4	1'-0"	38.41	0.285
4'-6"	3'-2"	1'-6"	1'-0"	7"	#4	1'-0"	#4	1'-0"	41.75	0.330
5'-0"	3'-2"	1'-6"	1'-0"	7"	#4	1'-0"	#4	1'-0"	45.09	0.343
5'-6"	3'-2"	1'-6"	1'-0"	7"	#4	1'-0"	#4	1'-0"	45.75	0.355
6'-0"	3'-2"	1'-6"	1'-0"	7"	#4	1'-0"	#4	1'-0"	46.42	0.367
7'-0"	3'-8"	1'-9"	1'-3"	7"	#4	1'-0"	#4	1'-0"	52.77	0.414
8'-0"	4'-2"	2'-0"	1'-6"	8"	#5	1'-0"	#4	1'-0"	60.19	0.486
9'-0"	4'-8"	2'-3"	1'-9"	8"	#4	6"	#4	6"	81.49	0.535
10'-0"	5'-2"	2'-6"	2'-0"	8"	#5	6"	#4	6"	97.25	0.584
11'-0"	5'-8"	2'-9"	2'-3"	8"	#6	6"	#5	6"	133.65	0.634
12'-0"	6'-2"	3'-0"	2'-6"	9"	#7	6"	#5	6"	162.29	0.721
13'-0"	6'-8"	3'-3"	2'-9"	11"	#7	6"	#5	6"	178.80	0.856
14'-0"	7'-2"	3'-6"	3'-0"	1'-0"	#8	6"	#5	6"	216.78	0.959
15'-0"	7'-8"	4'-0"	3'-0"	1'-1"	#9	6"	#6	6"	283.06	1.068
16'-0"	8'-2"	4'-6"	3'-0"	1'-3"	#9	6"	#6	6"	297.02	1.234

TABLE OF WINGWALL REINFORCING
(2~wings)

Bar	Size	No.	Spa
D	#5	~	1'-0"
E	#4	~	1'-0"
F	#4	~	1'-0"
G	#6	4	~
M	#4	4	~
P	#4	~	1'-0"
R	#5	6	~
V	#4	~	1'-0"

TABLE OF ESTIMATED CULVERT TOEWALL QUANTITIES

Bar	Size	No.	Spa
L	#4	~	1'-6"
Q	#4	1	~
Reinf (Lb/Ft)			2.45
Conc (CY/Ft)			0.037

WING DIMENSION FORMULAS:
(All values are in feet.)

Hw = H + T + C - 0.250'
A = (Hw - 0.333') (SL)
B = (A) tangent (30°)
Lw = (A) ÷ cosine (30°)

For cast-in-place culverts:
Ltw = (N) (S) + (N + 1) (U)

For precast culverts:
Ltw = (N) (2U + S) + (N - 1) (0.5')

Total wingwall area (two wings ~ SF) = (Hw + 0.333') (Lw)

Hw = Height of wingwall
SL:1 = Side slope ratio (horizontal:1 vertical)
Lw = Length of wingwall
Ltw = Culvert toewall length
N = Number of culvert spans

See applicable box culvert standard sheet for H, S, T, and U values.

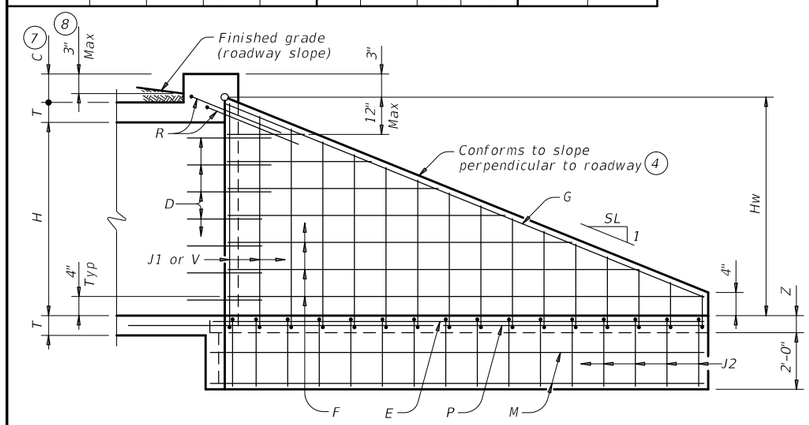

INSIDE ELEVATION

(Showing reinforcing. Culvert and culvert toewall reinforcing not shown for clarity.)

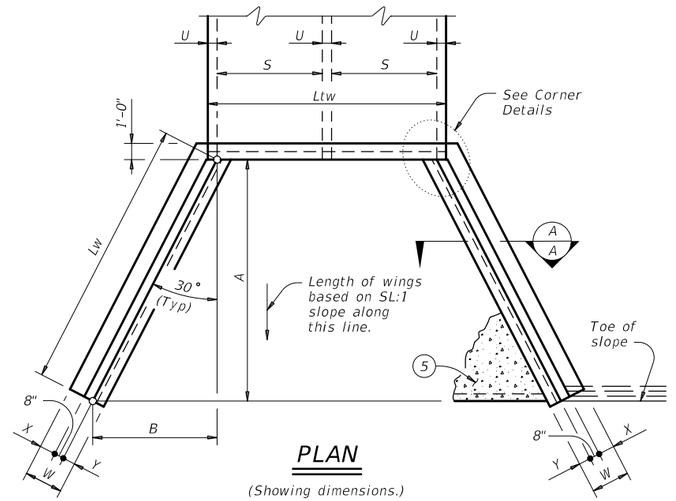

PLAN

(Showing dimensions.)

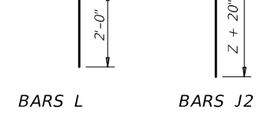

BARS D

BARS R

BARS J1

BARS V

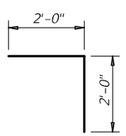

BARS L

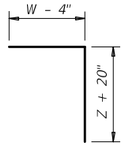

BARS J2

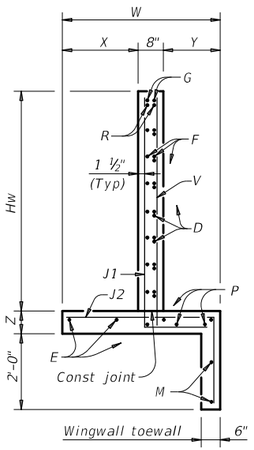

SECTION A-A

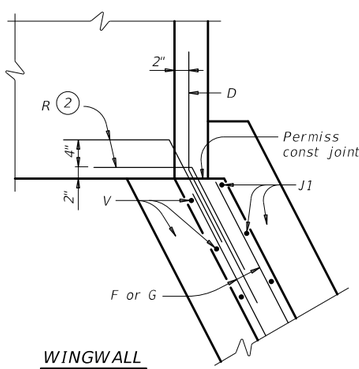

WINGWALL

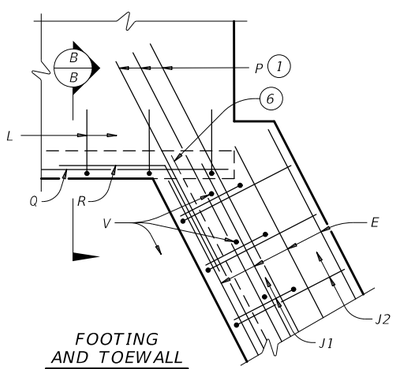

FOOTING AND TOEWALL

CORNER DETAILS

(Culvert and culvert toewall reinforcing not shown for clarity.)

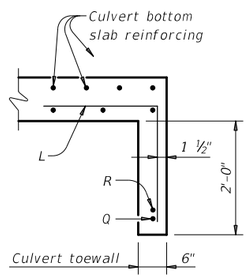

SECTION B-B 5

1. Extend Bars P 3'-0" minimum into bottom slab of box culvert.
2. Adjust as necessary to maintain 1 1#2" clear cover and 4" minimum between bars.
3. Quantities shown are based on an average wing height for two wings (one structure end). To determine total quantities for two wings, multiply the tabulated values by Lw.
4. Recommended values of side slope are: 2:1, 3:1, 4:1, and 6:1.
5. When shown elsewhere on the plans, construct 5" deep concrete riprap. Payment for riprap is as required by Item 432, "Riprap". Unless otherwise shown on the plans or directed by the Engineer, provide a 6" wide by 1'-6" deep reinforced concrete toewall along all edges of the riprap adjacent to natural ground; reinforce the toewall by extending typical riprap reinforcing into the toewall; and extend construction joints or grooved joints oriented in the direction of flow across the full distance of the riprap at intervals of approximately 20'. When such riprap is provided, the culvert toewall shown in SECTION B-B will not be required.
6. At Contractor's option, culvert toewall may be ended flush with wingwall toewall. Adjust reinforcing as needed.
7. 0" Min to 5'-0" Max. Estimated curb heights are shown elsewhere in the plans. For structures with pedestrian rail or curbs taller than 1'-0, refer to the Extended Curb Details (ECD) standard sheet. For structures with T631 or T631LS bridge rail, refer to the Mounting Details for T631 & T631LS Rails (T631-CM) standard sheet. Refer to the Box Culvert Rail Mounting Details (RAC) standard sheet for structures with bridge rail other than T631 or T631LS.
8. For vehicle safety, the following requirements must be met:
   - For structures without bridge rail, construct curbs no more than 3" above finished grade.
   - For structures with bridge rail, construct curbs flush with finished grade.

Reduce curb heights, if necessary, to meet the above requirements. No changes will be made in quantities and no additional compensation will be allowed for this work.

MATERIAL NOTES:
Provide Class C concrete (f'c=3,600 psi).
Provide Grade 60 reinforcing steel.
Provide galvanized reinforcing steel if required elsewhere in the plans.
In riprap concrete synthetic fibers listed on the "Fibers for Concrete" Material Producer List (MPL) may be used in lieu of steel reinforcing unless noted otherwise.

GENERAL NOTES:
Designed according to AASHTO LRFD Bridge Design Specifications.
When structure is founded on solid rock, depth of toewalls for culverts and wingwalls may be reduced or eliminated as directed by the Engineer.
See Box Culvert Supplement (BCS) standard sheet for additional dimensions and information.
The quantities for concrete and reinforcing steel resulting from the formulas given on this sheet are for Contractor's information only.

Cover dimensions are clear dimensions, unless noted otherwise. Reinforcing dimensions are out-to-out of bars.

Texas Department of Transportation

Bridge Division Standard

CONCRETE WINGWALLS WITH FLARED WINGS FOR 0° SKEW BOX CULVERTS

FW-0

FILE: fw-0std-20.dgn	DN: GAF	CK: CAT	DW: TxDOT	CK: TxDOT
©TxDOT February 2020 REVISIONS	CONT	SECT	JOB	HIGHWAY
	0912			FM 270, ETC
	DIST	COUNTY		SHEET NO.
	HOUS	GALVESTON		235

DISCLAIMER:
The use of this standard is governed by the "Texas Engineering Practice Act". No warranty of any kind is made by TxDOT for any purpose whatsoever. TxDOT assumes no responsibility for the conversion of this standard to other formats or for incorrect results or damages resulting from its use.

DATE:
FILE:

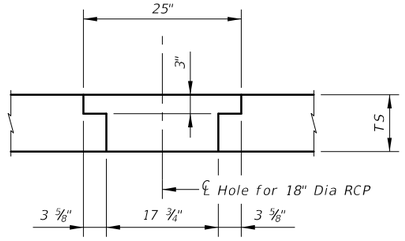

DETAIL "B"

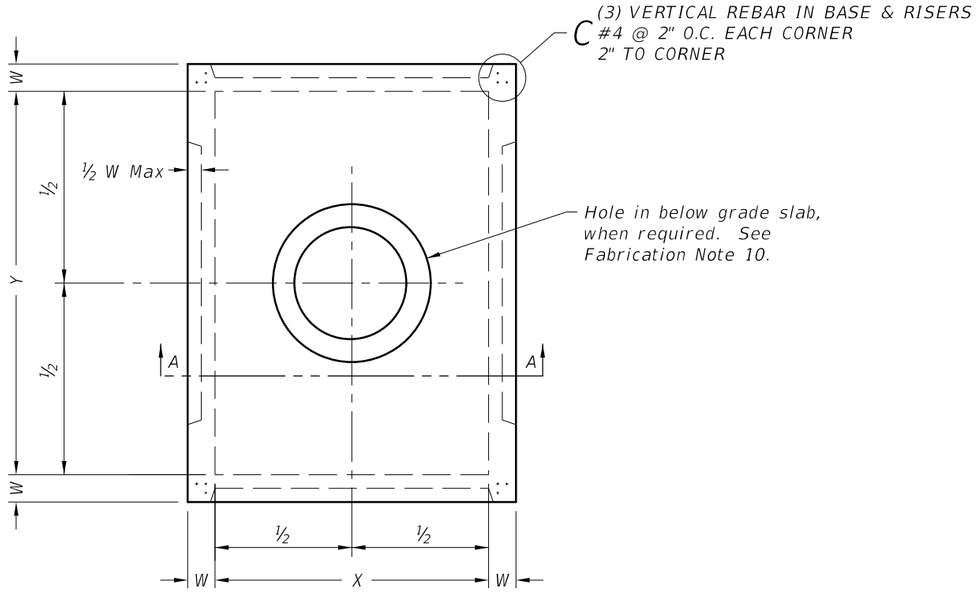

PLAN VIEW

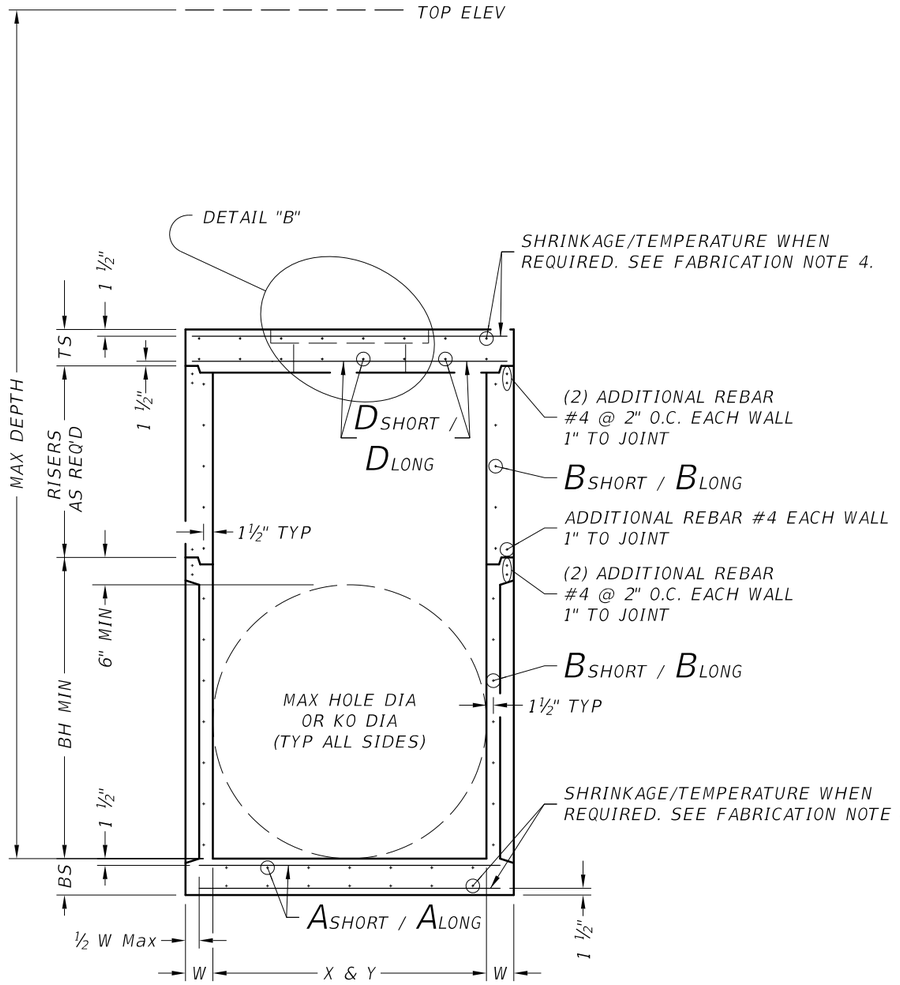

SECTION A-A

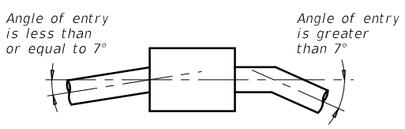

PIPE CONNECTION DETAIL

Connect pipes within 7° of normal to PJB wall.
If necessary, use pipe elbow or curved approach
alignment to stay within this limit.

FABRICATION NOTES:

1. Provide Class "H" concrete in accordance with Item 421 and having a minimum compressive strength of 5,000 psi.
2. Provide Grade 60 reinforcing steel or equivalent area of WWR.
3. Provide typical clear cover of 1 ½" to reinforcing steel at interior or exterior walls.
4. Walls or slabs with a thickness of 8" or greater require shrinkage and temperature reinforcing steel. Provide steel area = 0.11 in^2/ft each way.
5. No substitution is allowed for vertical and horizontal #4 bars in corners.
6. Manufacture base and risers to nearest 3" increment.
7. Design tongue and groove joints for full closure on both shoulders. Minimum spigot depth is ¾".
8. Provide lifting devices in conformance with Manufacturer's recommendations.
9. See sheet PDD for sizes, dimensions, and reinforcing steel not shown.
10. Provide hole in below grade slab only when PJB is installed with inlet type POD.

INSTALLATION NOTES:

1. Inverts (benching) to be provided by Contractor. Concrete or mortar used for invert is subsidiary to junction box.
2. Seal tongue and groove joints with preformed or bulk mastic in conformance with Manufacturer's recommendations. Tongue and groove joints may be grouted no more than 1" between each section, or ½ the joint depth, whichever is greater.
3. Do not grout rubber gasket joints without Manufacturer's recommendation.
4. For rigid pipe, cut hole in thin wall panel (KO) 4" Max, 2" Min larger than pipe OD.
5. For flexible pipe, consult boot/seal Manufacturer's specification for placement tolerance and hole size. Center pipe in hole and install boot/seal per Manufacturer's specification.

GENERAL NOTES:

1. Precast Junction Box consists of base slab, base unit, risers (as required), and below grade slab. See sheet PDD for sizes.
2. Designed according to ASTM C913.
3. Payment for junction box is per Item 465 "Junction Boxes, Manholes, and Inlets" by type and size.

Cover dimensions are clear dimensions, unless noted otherwise.

HL93 LOADING

Texas Department of Transportation

Bridge Division Standard

PRECAST JUNCTION BOX

PJB

FILE: prestd09-20.dgn	DN: TxDOT	CK: TxDOT	DW: TxDOT	CK: TxDOT
©TxDOT February 2020	CONT	SECT	JOB	HIGHWAY
REVISIONS	0912			FM 270, ETC
	DIST	COUNTY		SHEET NO.
	HOUS	GALVESTON		236

	Size	MAX DEPTH = 15 ft. to top of BASE SLAB										MAX DEPTH = 25 ft. to top of BASE SLAB										Min Height (See Gen Note 3)	Max HOLE DIA (See Fab Note 2)	Max KO DIA (See Fab Note 2)
		Base Slab			Base Unit or Riser Walls			Below Grade Slab (w/PJB) Reducing Slab (w/PB)				Base Slab			Base Unit or Riser Walls			Below Grade Slab (w/PJB) Reducing Slab (w/PB)						
		Short Span Reinf Steel Area	Long Span Reinf Steel Area	Thickness	Short Span Reinf Steel Area	Long Span Reinf Steel Area	Thickness	Reduced Riser Size	Short Span Reinf Steel Area	Long Span Reinf Steel Area	Thickness	Short Span Reinf Steel Area	Long Span Reinf Steel Area	Thickness	Short Span Reinf Steel Area	Long Span Reinf Steel Area	Thickness	Reduced Riser Size	Short Span Reinf Steel Area	Long Span Reinf Steel Area	Thickness			
	X x Y	Ashort	Along	BS	Bshort	Blong	W	RWSxRWL or ID	Dshort	Dlong	TS	Ashort	Along	BS	Bshort	Blong	W	RWSxRWL or ID	Dshort	Dlong	TS	BH MIN	HOLE DIA	KO DIA
	ft.	in^2/ft	in^2/ft	in.	in^2/ft	in^2/ft	in.	ft. **	in^2/ft	in^2/ft	in.	in^2/ft	in^2/ft	in.	in^2/ft	in^2/ft	in.	ft. **	in^2/ft	in^2/ft	in.	ft.	in.	in.
Precast Junction Box (PJB)	3x3	0.23	0.23	6	0.19	0.19	6	N/A	0.37	0.37	9	0.29	0.29	6	0.24	0.24	6	N/A	0.37	0.37	9	3.5	36	36
	4x4	0.29	0.29	6	0.24	0.24	6	N/A	0.41	0.41	9	0.47	0.47	6	0.38	0.38	6	N/A	0.41	0.41	9	4.5	48	48
	3x5	0.29	0.18	6	0.19	0.35	6	N/A	0.48	0.48	9	0.39	0.18	6	0.23	0.59	6	N/A	0.48	0.48	9	3.5	36/60	36/60
	4x5	0.36	0.18	6	0.22	0.34	6	N/A	0.42	0.42	9	0.53	0.26	6	0.39	0.59	6	N/A	0.42	0.42	9	4.5	48/60	48/60
	5x5	0.36	0.36	6	0.34	0.34	6	N/A	0.43	0.43	9	0.62	0.62	6	0.59	0.59	6	N/A	0.43	0.43	9	5.5	60	60
	5x6	0.27	0.27	9	0.34	0.45	6	N/A	0.48	0.48	9	0.47	0.45	9	0.38	0.54	8	N/A	0.48	0.48	9	5.5	60/72	60/72
	6x6	0.27	0.27	9	0.45	0.45	6	N/A	0.56	0.56	9	0.52	0.52	9	0.54	0.54	8	N/A	0.56	0.56	9	6.5	72	72
	8x8	0.46	0.46	9	0.51	0.51	8	N/A	0.45	0.45	12	0.87	0.87	9	0.59	0.59	10	N/A	0.45	0.45	12	8.5	96	72
Precast Base (PB)	3x3	0.23	0.23	6	0.19	0.19	6	N/A	N/A	N/A	N/A	0.29	0.29	6	0.24	0.24	6	N/A	N/A	N/A	N/A	3.5	36	36
	4x4	0.29	0.29	6	0.24	0.24	6	N/A	N/A	N/A	N/A	0.47	0.47	6	0.38	0.38	6	N/A	N/A	N/A	N/A	4.5	48	48
	3x5	0.29	0.18	6	0.19	0.35	6	3x3	0.30	0.34	9	0.39	0.18	6	0.23	0.59	6	3x3	0.40	0.40	9	3.5	36/60	36/60
	4x5	0.36	0.18	6	0.22	0.34	6	3x3	0.30	0.30	9	0.53	0.26	6	0.39	0.59	6	3x3	0.46	0.37	9	4.5	48/60	48/60
	4x5	0.36	0.18	6	0.22	0.34	6	4x4	0.30	0.30	9	0.53	0.26	6	0.39	0.59	6	4x4	0.39	0.39	9	4.5	48/60	48/60
	4x5	0.36	0.18	6	0.22	0.34	6	48"	0.39	0.39	9	0.53	0.26	6	0.39	0.59	6	48"	0.47	0.47	9	4.5	48/60	48/60
	4x5	0.36	0.18	6	0.22	0.34	6	3x5	0.33	0.40	9	0.53	0.26	6	0.39	0.59	6	3x5	0.48	0.48	9	4.5	48/60	48/60
	5x5	0.36	0.36	6	0.34	0.34	6	3x3	0.34	0.34	9	0.62	0.62	6	0.59	0.59	6	3x3	0.53	0.53	9	5.5	60	60
	5x5	0.36	0.36	6	0.34	0.34	6	4x4	0.36	0.36	9	0.62	0.62	6	0.59	0.59	6	4x4	0.64	0.64	9	5.5	60	60
	5x5	0.38	0.38	6	0.34	0.34	6	48"	0.36	0.36	9	0.62	0.62	6	0.59	0.59	6	48"	0.64	0.64	9	5.5	60	60
	5x5	0.36	0.36	6	0.34	0.34	6	3x5	0.34	0.40	9	0.62	0.62	6	0.59	0.59	6	3x5	0.53	0.53	9	5.5	60	60
	5x6	0.31	0.31	9	0.34	0.45	6	3x3	0.34	0.34	9	0.47	0.45	9	0.38	0.54	8	3x3	0.61	0.50	9	5.5	60/72	60/72
	5x6	0.27	0.27	9	0.34	0.45	6	4x4	0.36	0.45	9	0.47	0.45	9	0.38	0.54	8	4x4	0.74	0.57	9	5.5	60/72	60/72
	5x6	0.29	0.29	9	0.34	0.45	6	48"	0.36	0.45	9	0.47	0.45	9	0.38	0.54	8	48"	0.74	0.57	9	5.5	60/72	60/72
	5x6	0.29	0.29	9	0.34	0.45	6	3x5	0.45	0.45	9	0.47	0.45	9	0.38	0.54	8	3x5	0.61	0.61	9	5.5	60/72	60/72
	6x6	0.29	0.29	9	0.45	0.45	6	3x3	0.41	0.41	9	0.52	0.52	9	0.54	0.54	8	3x3	0.74	0.74	9	6.5	72	72
	6x6	0.27	0.27	9	0.45	0.45	6	4x4	0.45	0.45	9	0.52	0.52	9	0.54	0.54	8	4x4	0.87	0.87	9	6.5	72	72
	6x6	0.29	0.29	9	0.45	0.45	6	48"	0.45	0.45	9	0.52	0.52	9	0.54	0.54	8	48"	0.87	0.87	9	6.5	72	72
	6x6	0.29	0.29	9	0.45	0.45	6	3x5	0.45	0.45	9	0.52	0.52	9	0.54	0.54	8	3x5	0.87	0.87	9	6.5	72	72
	8x8	0.52	0.52	9	0.51	0.51	8	3x3	0.61	0.61	12	0.91	0.91	9	0.70	0.70	10	3x3	0.85	0.85	12	8.5	96	72
	8x8	0.52	0.52	9	0.51	0.51	8	4x4	0.70	0.70	12	0.87	0.87	9	0.70	0.70	10	4x4	1.01	1.01	12	8.5	96	72
	8x8	0.52	0.52	9	0.51	0.51	8	48"	0.70	0.70	12	0.87	0.87	9	0.70	0.70	10	48"	1.01	1.01	12	8.5	96	72
	8x8	0.52	0.52	9	0.51	0.51	8	3x5	0.70	0.85	12	0.87	0.87	9	0.70	0.70	10	3x5	1.01	1.01	12	8.5	96	72

** Unless otherwise indicated.

FABRICATION NOTES:
1. Maximum spacing of reinforcement is 8".
2. At manufacturer's option, provide cast or cored holes or thin wall panels (KO) to the maximum diameter shown for each. When no penetration is required, it is acceptable to provide a wall with no sectional reduction.

GENERAL NOTES:
1. Precast Junction Box consists of base slab, base unit, risers (as required), and below grade slab. See sheet PJB for details.
2. Precast Base consists of base slab, base unit, risers (as required), reducing slab (as required), and reduced risers (as required). See sheet PB for details.
3. Min Height shown is for stock base units. Use stock base units whenever practical. Smaller height base units can be used in special installation circumstances, when noted elsewhere in the plans. Absolute minimum height of base units is 2'-6".

HL93 LOADING

Texas Department of Transportation

Bridge Division Standard

DESIGN DATA FOR PRECAST BASE AND JUNCTION BOX

PDD

FILE: prestd10-20.dgn	DN: TxDOT	CK: TxDOT	DW: TxDOT	CK: TxDOT
©TxDOT February 2020	CONT	SECT	JOB	HIGHWAY
REVISIONS	0912			FM 270, ETC
	DIST	COUNTY		SHEET NO.
	HOUS	GALVESTON		237

DISCLAIMER:
The use of this standard is governed by the "Texas Engineering Practice Act". No warranty of any kind is made by TxDOT for any purpose whatsoever. TxDOT assumes no responsibility for the conversion of this standard to other formats or for incorrect results or damages resulting from its use.

DATE:
FILE:

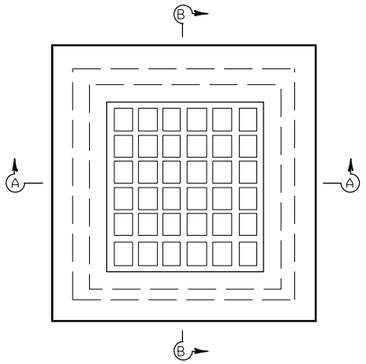

PLAN

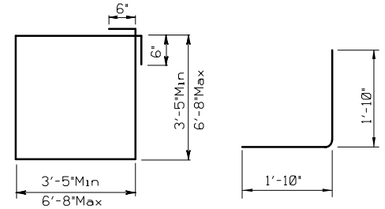

BAR A (#4)

BAR L (#4)

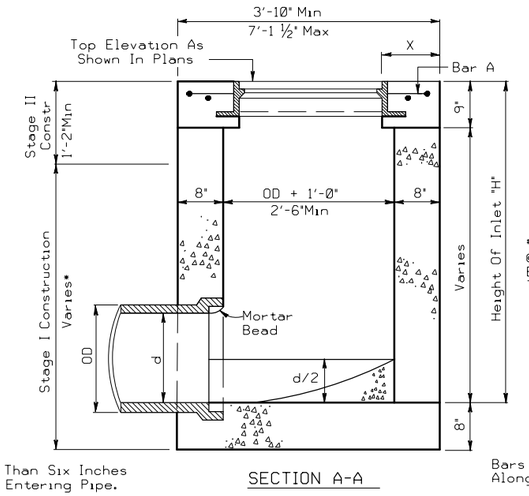

• But Not Less Than Six Inches
Over Highest Entering Pipe.

SECTION A-A

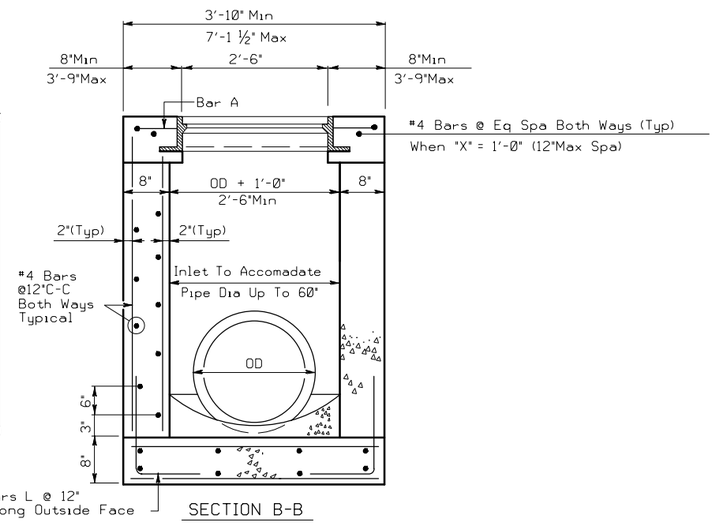

SECTION B-B

TYPE A INLET

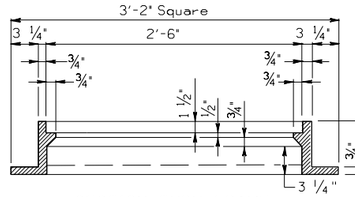

SECTION THRU FRAME

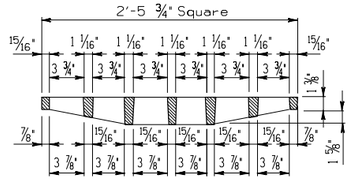

SECTION THRU GRATE

FRAME AND GRATE

Neenah No.R3418-A
EJIW No.V-4880-1

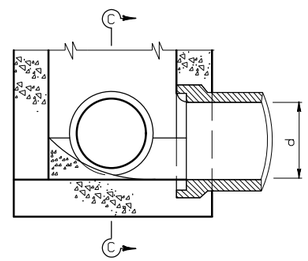

PART SECTION AT INVERT

Showing Shaping Of Invert, Pipe Entering From Adjacent Sides

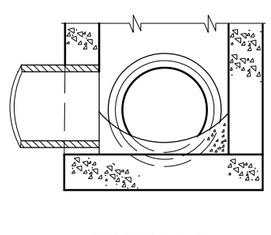

SECTION C-C

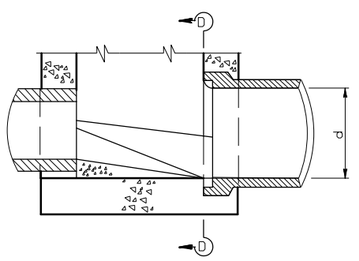

PART SECTION AT INVERT

Showing Shaping Of Invert, Pipe Entering From Opposite Sides

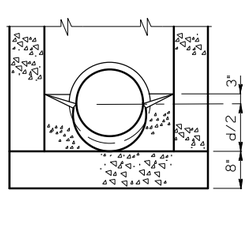

SECTION D-D

d = Diameter

GENERAL NOTES:

Where Size Of Pipes Passing Thru Inlet Exceeds 30" Increase Inside Width To Outside Diameter Of Pipe Plus 1'-0" (OD + 1'-0").

See Standard or Detail Sheet For Excavation and Backfill Diagrams.

Inlets Shall Be Built To Stage I And Finished After All Grading Operations Are Substantially Completed.

Frames And Grates May Be Gray Cast Iron.

Shop Drawings Will Be Required For Precast Construction Of Inlets.

NOT FOR TRAFFIC LOADS

Texas Department of Transportation
Houston District

INLET TYPE A

HIL-A

FILE: STDD4.DGN	DN: TxDOT	CK: TxDOT	DW: TxDOT	CK: TxDOT	STD:	
© TxDOT 2014	DIST	FED REG	PROJECT NO.			SHEET
REVISIONS	HOUS	6				238
9/30/2016: Removed Manhole Steps	COUNTY		CONTROL	SECT	JOB	HIGHWAY
	GALVESTON		0912	73	215	IH 270, ETC

STDD4.DGN

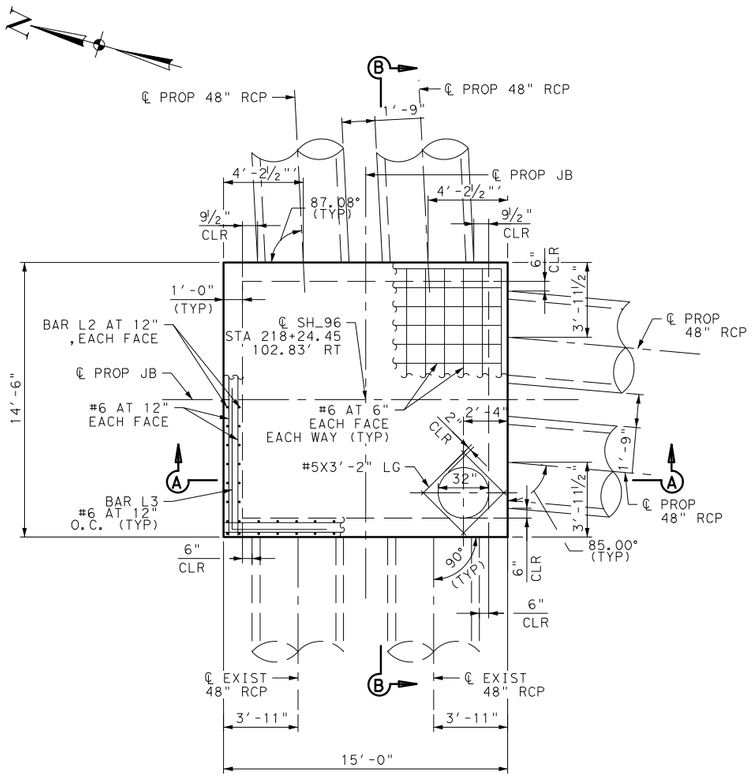

PLAN VIEW
SCALE: 1/8"=1'-0"

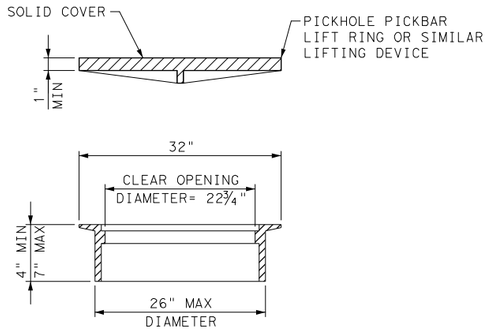

RING AND COVER DETAILS
APPROXIMATE WEIGHT = 245 LBS
SCALE: 1/8"=1'-0"

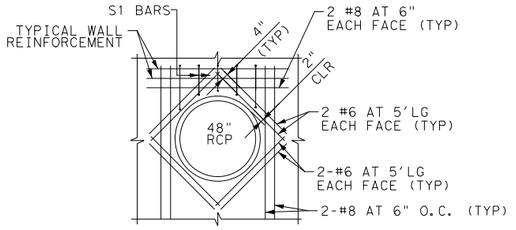

WALL DETAIL AT CLOSE SPACED PIPE OPENING
ADDITIONAL REINFORCING AT 48" RCP OPENING
(WALL REINFORCING NOT SHOWN FOR CLARITY)
SCALE: N.T.S.

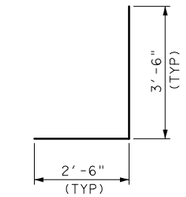

BARS L1#6
SCALE: 1/4"=1'-0"

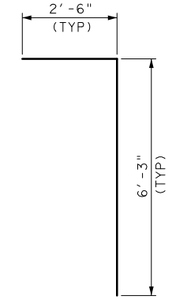

BARS L2#6
SCALE: 1/4"=1'-0"

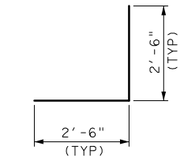

BARS L3#6
SCALE: 1/4"=1'-0"

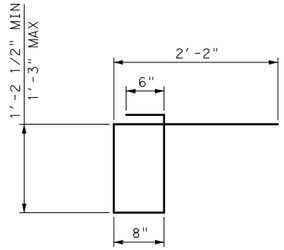

BARS S1#5
SCALE: 1/16"=1'-0"

NOTES:

1. ALL REINFORCING STEEL SHALL BE ASTM A615, WITH YIELD STRENGTH OF 60 KSI.
2. EXPOSED EDGES SHALL BE CHAMFERED.
3. ALL CONCRETE SHALL BE CLASS "C" F'c=3,000 PSI

TABLE OF ESTIMATED QUANTITIES			
	DESCRIPTION	UNIT	QUANTITY
*	CLASS "C" CONCRETE	CY	24.7
*	REINFORCING STEEL	LB	6,843

* FOR CONTRACTOR'S INFORMATION ONLY

*ASSUMED SOIL ALLOWABLE BEARING CAPACITY: 2,000 PSF, NOTIFY ENGINEER OF RECORD IF ALLOWABLE BEARING CAPACITY IS BELOW ASSUMED NUMBER.

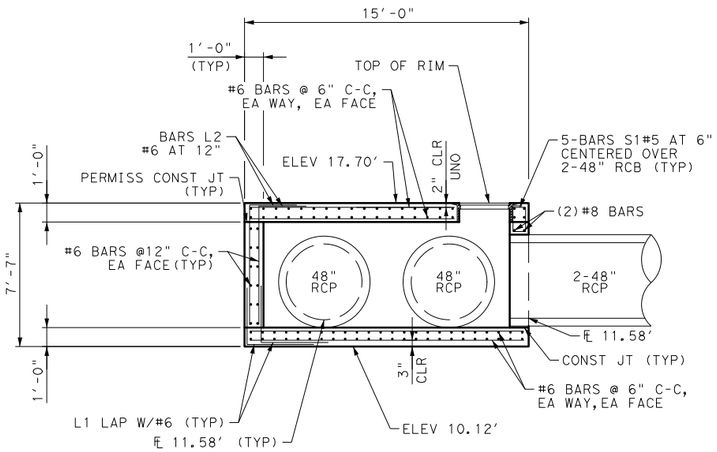

SECTION A-A
SCALE: 1/8"=1'-0"

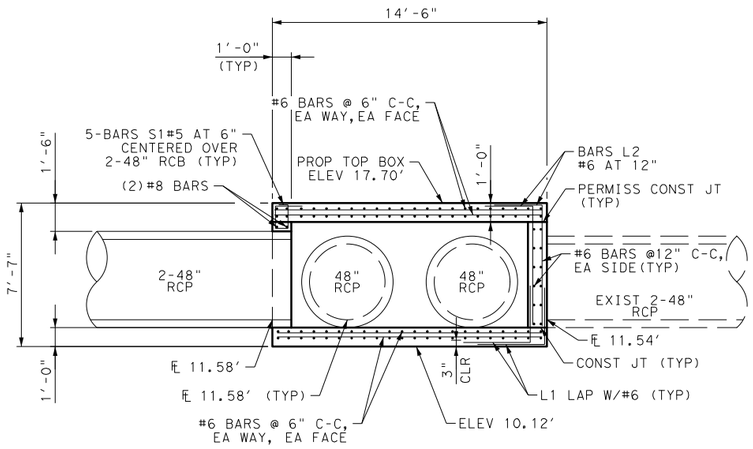

SECTION B-B
SCALE: 1/8"=1'-0"

NO.	DATE	REVISION	APPROVED

STATE OF TEXAS
MIGUEL TREVINO III
92037
REGISTERED PROFESSIONAL ENGINEER

7/26/2023

Texas Department of Transportation ©2023

JONES|CARTER
Texas Board of Professional Engineers Registration No. F-23290
4550 Lockhill Selma Rd, Suite 100 • San Antonio, Texas 78249 • 210.494.5511

SH 96, FM 270 JUNCTION BOX DETAILS
STA 218+24.45, 102.83' RT

SHEET 1 OF 1

DRAWN	FED.RD. DIV.NO.	FEDERAL AID PROJECT NO.		HIGHWAY NO.
SF	06			FM 270, ETC
DESIGNED	STATE	DIST.	COUNTY	SHEET NO.
RM	TEXAS	HOUSTON	GALVESTON	239
CHECKED	CONT.	SECT.	JOB	
FF	0912	73	215	
APPROVED				
MT				

PLOTDRIVER: LCBF.plt.cfg
PENTABLE: LCBF.tbl
DATE: 7/26/2023 2:55:24 PM USER: sf1
FILE: c:\bms\pwe101-01\susan.fuentes\dms22645\12X12 JB_01.dgn

DISCLAIMER:
The use of this standard is governed by the "Texas Engineering Practice Act". No warranty of any kind is made by TxDOT for any purpose whatsoever. TxDOT assumes no responsibility for the conversion of this standard to other formats or for incorrect results or damages resulting from its use.

DATE: 8/31/2023 10:22:42 AM
FILE: $FILE$

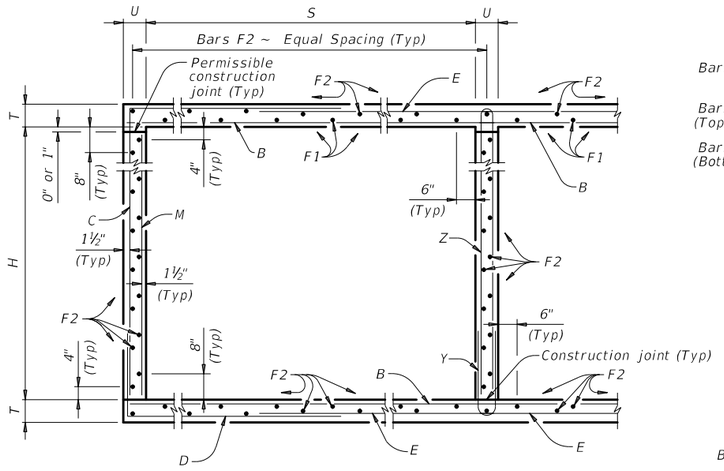

TYPICAL SECTION

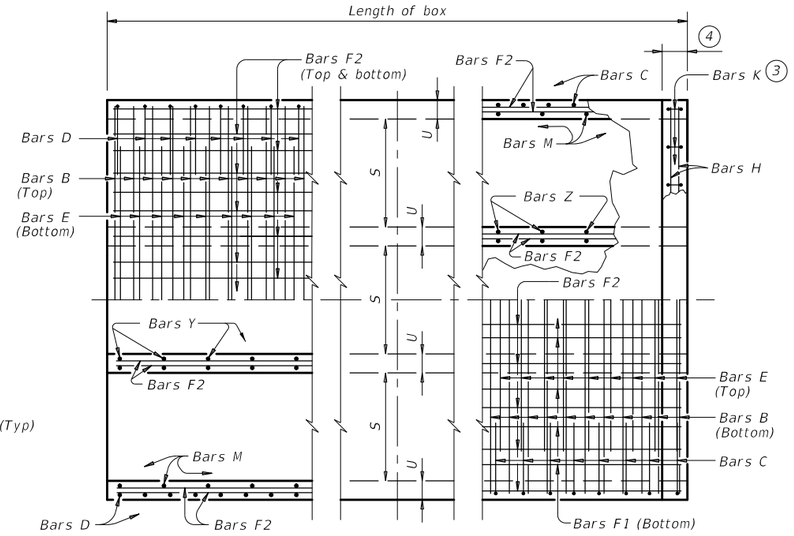

PART PLANS

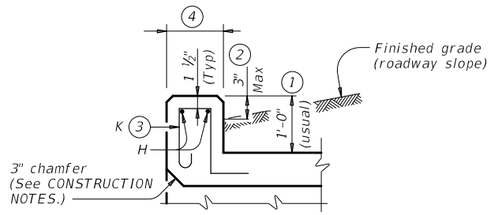

SECTION THRU CURB

TABLE OF BAR DIMENSIONS		
H	"X"	"Y"
2'-0"	2'-7 ½"	4'-1"
3'-0"	3'-7 ½"	4'-1"
4'-0"	4'-7 ½"	4'-1"
5'-0"	5'-7 ½"	4'-1"
6'-0"	6'-7 ½"	4'-1"

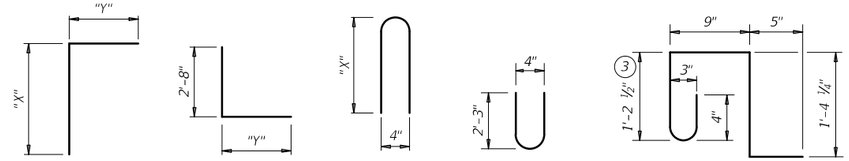

1. 0" Min to 5'-0" Max. Estimated curb heights are shown elsewhere in the plans. For structures with pedestrian rail or curbs taller than 1'-0", refer to the Extended Curb Details (ECD) standard sheet. For structures with T631 or T631LS bridge rail, refer to the Mounting Details for T631 & T631LS Rails (T631-CM) standard sheet. Refer to the Rail Anchorage Curb (RAC) standard sheet for structures with bridge rail other than T631 or T631LS.

2. For vehicle safety, the following requirements must be met:
   - For structures without bridge rail, construct curbs no more than 3" above finished grade.
   - For structures with bridge rail, construct curbs flush with finished grade.

   Reduce curb heights, if necessary, to meet the above requirements. No changes will be made in quantities and no additional compensation will be allowed for this work.

3. For curbs less than 1'-0" high, tilt Bars K or reduce bar height as necessary to maintain cover. For curbs less than 3" high, Bars K may be omitted.

4. 1'-0" typical. 2'-3" when the Rail Anchorage Curb (RAC) standard sheet is referred to elsewhere in the plans.

The Contractor may replace Bars B, C, D, E, F1, F2, M, Y, and/or Z with deformed welded wire reinforcement (WWR) meeting the requirements of ASTM A1064. The area of required reinforcement may be reduced by the ratio of 60 ksi / 70 ksi. Spacing of WWR is limited to 4" Min and 18" Max. When required, provide lap splices in the WWR of the same length required for the equivalent bar size, rounded up for wire sizes between conventional bar sizes. The lap length required for WWR is never less than the lap length required for uncoated #4 bars.

Example conversion: Replacing No. 6 Gr 60 at 6" Spacing with WWR
Required WWR = (0.44 sq. in. per 0.5 ft.) x (60 ksi / 70 ksi) = 0.755 sq. in. per ft.
If D30.6 wire is used to meet the 0.755 sq. in. per ft. requirement in this example, the required spacing = (0.306 sq. in.) / (0.755 sq. in. per ft.) x (12 in. per ft.) = 4.86" Max spacing. Required lap length for the provided D30.6 wire is 2'-1" (the same minimum lap length required for uncoated #5 bars, as listed under MATERIAL NOTES).

CONSTRUCTION NOTES:

Do not use permanent forms.
Chamfer the bottom edge of the top slab 3" at the entrance.
Optionally, raise construction joints shown at the flow line by a maximum of 6". If this option is taken, Bars M may be cut off or raised, Bars C and D may be reversed, and Bars Y and Z may be reversed.

MATERIAL NOTES:

Provide Grade 60 reinforcing steel.
Provide galvanized reinforcing steel if required elsewhere in the plans.
Provide Class C concrete (f'c = 3,600 psi) for culvert barrel and curb, with the following exceptions: provide Class S concrete (f'c = 4,000 psi) for top slabs of:
- culverts with overlay,
- culverts with 1-to-2 course surface treatment, or
- culverts with the top slab as the final riding surface.

Provide bar laps, where required, as follows:
- Uncoated or galvanized ~ #4 = 1'-8" Min
- Uncoated or galvanized ~ #5 = 2'-1" Min
- Uncoated or galvanized ~ #6 = 2'-6" Min

GENERAL NOTES:

Designed according to AASHTO LRFD Bridge Design Specifications for the range of fill heights shown.
See the Multiple Box Culverts Cast-In-Place Miscellaneous Detail (MC-MD) standard sheet for details pertaining to skewed ends, angle sections, and lengthening.

Cover dimensions are clear dimensions, unless noted otherwise.
Reinforcing bar dimensions shown are out-to-out of bar.

HL93 LOADING SHEET 1 OF 2

Texas Department of Transportation — Bridge Division Standard

MULTIPLE BOX CULVERTS CAST-IN-PLACE
6'-0" SPAN
0' TO 16' FILL

MC-6-16

FILE: mc616ste-20.dgn	DN: TBE	CK: BMP	DW: TxDOT	CK: TxDOT
©TxDOT February 2020	CONT	SECT	JOB	HIGHWAY
REVISIONS	0912	73	215	FM 270, ETC
	DIST	COUNTY		SHEET NO.
	HOU	GALVESTON		240

DISCLAIMER:
The use of this standard is governed by the "Texas Engineering Practice Act". No warranty of any kind is made by TxDOT for any purpose whatsoever. TxDOT assumes no responsibility for the conversion of this standard to other formats or for incorrect results or damages resulting from its use.

DATE: 8/31/2023 10:22:42 AM
FILE: $FILE$

NUMBER OF SPANS	SECTION DIMENSIONS				BILLS OF REINFORCING STEEL (For Box Length = 40 feet)																																QUANTITIES					
					Bars B					Bars C & D							Bars E					Bars F1 ~ #4				Bars F2 ~ #4				Bars M ~ #4				Bars Y & Z ~ #4								Bars H 4 ~ #4		Bars K		Per Foot of Barrel		Curb		Total	
												Bars C		Bars D																				Bars Y		Bars Z											
	S	H	T	U	No.	Size	Spa	Length	Wt	No.	Size	Spa	Length	Wt	Length	Wt	No.	Size	Spa	Length	Wt	No.	Spa	Length	Wt	No.	Spa	Length	Wt	No.	Spa	Length	Wt	No.	Spa	Length	Wt	No.	Spa	Length	Wt	Length	Wt	No.	Wt	Conc (CY)	Renf (Lb)	Conc (CY)	Renf (Lb)	Conc (CY)	Renf (Lb)
2	6' – 0"	2' – 0"	9"	7"	108	#6	9"	13' – 6"	2,190	108	#5	9"	6' – 8"	751	6' – 9"	760	108	#6	9"	10' – 2"	1,649	10	18"	39' – 9"	266	44	18"	39' – 9"	1,168	108	9"	2' – 0"	144	54	9"	4' – 9"	171	5' – 5"	195	13' – 6"	36	30	84	0.894	182.4	1.0	120	36.8	7,414
3	6' – 0"	2' – 0"	9"	7"	108	#6	9"	20' – 1"	3,258	108	#5	9"	6' – 8"	751	6' – 9"	760	108	#6	9"	16' – 9"	2,717	15	18"	39' – 9"	398	63	18"	39' – 9"	1,673	108	9"	2' – 0"	144	108	9"	4' – 9"	343	5' – 5"	391	20' – 1"	54	44	122	1.302	260.9	1.5	176	53.6	10,611
4	6' – 0"	2' – 0"	9"	7"	108	#6	9"	26' – 8"	4,326	108	#5	9"	6' – 8"	751	6' – 9"	760	108	#6	9"	23' – 4"	3,785	20	18"	39' – 9"	531	82	18"	39' – 9"	2,177	108	9"	2' – 0"	144	162	9"	4' – 9"	514	5' – 5"	586	26' – 8"	71	56	156	1.711	339.4	2.0	227	70.4	13,801
5	6' – 0"	2' – 0"	9"	7"	108	#6	9"	33' – 3"	5,394	108	#5	9"	6' – 8"	751	6' – 9"	760	108	#6	9"	29' – 11"	4,853	25	18"	39' – 9"	664	101	18"	39' – 9"	2,682	108	9"	2' – 0"	144	216	9"	4' – 9"	685	5' – 5"	782	33' – 3"	89	70	195	2.120	417.9	2.5	284	87.3	16,999
6	6' – 0"	2' – 0"	9"	7"	108	#6	9"	39' – 10"	6,462	108	#5	9"	6' – 8"	751	6' – 9"	760	108	#6	9"	36' – 6"	5,921	30	18"	39' – 9"	797	120	18"	39' – 9"	3,186	108	9"	2' – 0"	144	270	9"	4' – 9"	857	5' – 5"	977	39' – 10"	106	82	228	2.529	496.4	3.0	334	104.1	20,189
2	6' – 0"	3' – 0"	9"	7"	108	#6	9"	13' – 6"	2,190	108	#5	9"	7' – 8"	864	6' – 9"	760	108	#6	9"	10' – 2"	1,649	10	18"	39' – 9"	266	50	18"	39' – 9"	1,328	108	9"	3' – 0"	216	54	9"	4' – 9"	171	7' – 5"	268	13' – 6"	36	30	84	0.958	192.8	1.0	120	39.3	7,832
3	6' – 0"	3' – 0"	9"	7"	108	#6	9"	20' – 1"	3,258	108	#5	9"	7' – 8"	864	6' – 9"	760	108	#6	9"	16' – 9"	2,717	15	18"	39' – 9"	398	71	18"	39' – 9"	1,885	108	9"	3' – 0"	216	108	9"	4' – 9"	343	7' – 5"	535	20' – 1"	54	44	122	1.389	274.4	1.5	176	57.1	11,152
4	6' – 0"	3' – 0"	9"	7"	108	#6	9"	26' – 8"	4,326	108	#5	9"	7' – 8"	864	6' – 9"	760	108	#6	9"	23' – 4"	3,785	20	18"	39' – 9"	531	92	18"	39' – 9"	2,443	108	9"	3' – 0"	216	162	9"	4' – 9"	514	7' – 5"	803	26' – 8"	71	56	156	1.819	356.1	2.0	227	74.7	14,469
5	6' – 0"	3' – 0"	9"	7"	108	#6	9"	33' – 3"	5,394	108	#5	9"	7' – 8"	864	6' – 9"	760	108	#6	9"	29' – 11"	4,853	25	18"	39' – 9"	664	113	18"	39' – 9"	3,000	108	9"	3' – 0"	216	216	9"	4' – 9"	685	7' – 5"	1,070	33' – 3"	89	70	195	2.250	437.7	2.5	284	92.5	17,790
6	6' – 0"	3' – 0"	9"	7"	108	#6	9"	39' – 10"	6,462	108	#5	9"	7' – 8"	864	6' – 9"	760	108	#6	9"	36' – 6"	5,921	30	18"	39' – 9"	797	134	18"	39' – 9"	3,558	108	9"	3' – 0"	216	270	9"	4' – 9"	857	7' – 5"	1,338	39' – 10"	106	82	228	2.681	519.3	3.0	334	110.2	21,107
2	6' – 0"	4' – 0"	9"	7"	108	#6	9"	13' – 6"	2,190	108	#5	9"	8' – 8"	976	6' – 9"	760	108	#6	9"	10' – 2"	1,649	10	18"	39' – 9"	266	50	18"	39' – 9"	1,328	108	9"	4' – 0"	289	54	9"	4' – 9"	171	9' – 5"	340	13' – 6"	36	30	84	1.023	199.2	1.0	120	41.9	8,089
3	6' – 0"	4' – 0"	9"	7"	108	#6	9"	20' – 1"	3,258	108	#5	9"	8' – 8"	976	6' – 9"	760	108	#6	9"	16' – 9"	2,717	15	18"	39' – 9"	398	71	18"	39' – 9"	1,885	108	9"	4' – 0"	289	108	9"	4' – 9"	343	9' – 5"	679	20' – 1"	54	44	122	1.475	282.6	1.5	176	60.5	11,481
4	6' – 0"	4' – 0"	9"	7"	108	#6	9"	26' – 8"	4,326	108	#5	9"	8' – 8"	976	6' – 9"	760	108	#6	9"	23' – 4"	3,785	20	18"	39' – 9"	531	92	18"	39' – 9"	2,443	108	9"	4' – 0"	289	162	9"	4' – 9"	514	9' – 5"	1,019	26' – 8"	71	56	156	1.927	366.1	2.0	227	79.1	14,870
5	6' – 0"	4' – 0"	9"	7"	108	#6	9"	33' – 3"	5,394	108	#5	9"	8' – 8"	976	6' – 9"	760	108	#6	9"	29' – 11"	4,853	25	18"	39' – 9"	664	113	18"	39' – 9"	3,000	108	9"	4' – 0"	289	216	9"	4' – 9"	685	9' – 5"	1,359	33' – 3"	89	70	195	2.380	449.5	2.5	284	97.7	18,264
6	6' – 0"	4' – 0"	9"	7"	108	#6	9"	39' – 10"	6,462	108	#5	9"	8' – 8"	976	6' – 9"	760	108	#6	9"	36' – 6"	5,921	30	18"	39' – 9"	797	134	18"	39' – 9"	3,558	108	9"	4' – 0"	289	270	9"	4' – 9"	857	9' – 5"	1,698	39' – 10"	106	82	228	2.832	533.0	3.0	334	116.2	21,652
2	6' – 0"	5' – 0"	9"	7"	108	#6	9"	13' – 6"	2,190	108	#5	9"	9' – 8"	1,089	6' – 9"	760	108	#6	9"	10' – 2"	1,649	10	18"	39' – 9"	266	56	18"	39' – 9"	1,487	108	9"	5' – 0"	361	54	9"	4' – 9"	171	11' – 5"	412	13' – 6"	36	30	84	1.088	209.6	1.0	120	44.5	8,505
3	6' – 0"	5' – 0"	9"	7"	108	#6	9"	20' – 1"	3,258	108	#5	9"	9' – 8"	1,089	6' – 9"	760	108	#6	9"	16' – 9"	2,717	15	18"	39' – 9"	398	79	18"	39' – 9"	2,098	108	9"	5' – 0"	361	108	9"	4' – 9"	343	11' – 5"	824	20' – 1"	54	44	122	1.562	296.2	1.5	176	64.0	12,024
4	6' – 0"	5' – 0"	9"	7"	108	#6	9"	26' – 8"	4,326	108	#5	9"	9' – 8"	1,089	6' – 9"	760	108	#6	9"	23' – 4"	3,785	20	18"	39' – 9"	531	102	18"	39' – 9"	2,708	108	9"	5' – 0"	361	162	9"	4' – 9"	514	11' – 5"	1,235	26' – 8"	71	56	156	2.035	382.7	2.0	227	83.4	15,536
5	6' – 0"	5' – 0"	9"	7"	108	#6	9"	33' – 3"	5,394	108	#5	9"	9' – 8"	1,089	6' – 9"	760	108	#6	9"	29' – 11"	4,853	25	18"	39' – 9"	664	125	18"	39' – 9"	3,319	108	9"	5' – 0"	361	216	9"	4' – 9"	685	11' – 5"	1,647	33' – 3"	89	70	195	2.509	469.3	2.5	284	102.8	19,056
6	6' – 0"	5' – 0"	9"	7"	108	#6	9"	39' – 10"	6,462	108	#5	9"	9' – 8"	1,089	6' – 9"	760	108	#6	9"	36' – 6"	5,921	30	18"	39' – 9"	797	148	18"	39' – 9"	3,930	108	9"	5' – 0"	361	270	9"	4' – 9"	857	11' – 5"	2,059	39' – 10"	106	82	228	2.983	555.9	3.0	334	122.3	22,570
2	6' – 0"	6' – 0"	9"	7"	108	#6	9"	13' – 6"	2,190	108	#5	9"	10' – 8"	1,202	6' – 9"	760	108	#6	9"	10' – 2"	1,649	10	18"	39' – 9"	266	62	18"	39' – 9"	1,646	108	9"	6' – 0"	433	54	9"	4' – 9"	171	13' – 5"	484	13' – 6"	36	30	84	1.153	220.0	1.0	120	47.1	8,921
3	6' – 0"	6' – 0"	9"	7"	108	#6	9"	20' – 1"	3,258	108	#5	9"	10' – 8"	1,202	6' – 9"	760	108	#6	9"	16' – 9"	2,717	15	18"	39' – 9"	398	87	18"	39' – 9"	2,310	108	9"	6' – 0"	433	108	9"	4' – 9"	343	13' – 5"	968	20' – 1"	54	44	122	1.648	309.7	1.5	176	67.4	12,565
4	6' – 0"	6' – 0"	9"	7"	108	#6	9"	26' – 8"	4,326	108	#5	9"	10' – 8"	1,202	6' – 9"	760	108	#6	9"	23' – 4"	3,785	20	18"	39' – 9"	531	112	18"	39' – 9"	2,974	108	9"	6' – 0"	433	162	9"	4' – 9"	514	13' – 5"	1,452	26' – 8"	71	56	156	2.144	399.4	2.0	227	87.7	16,204
5	6' – 0"	6' – 0"	9"	7"	108	#6	9"	33' – 3"	5,394	108	#5	9"	10' – 8"	1,202	6' – 9"	760	108	#6	9"	29' – 11"	4,853	25	18"	39' – 9"	664	137	18"	39' – 9"	3,638	108	9"	6' – 0"	433	216	9"	4' – 9"	685	13' – 5"	1,936	33' – 3"	89	70	195	2.639	489.1	2.5	284	108.0	19,849
6	6' – 0"	6' – 0"	9"	7"	108	#6	9"	39' – 10"	6,462	108	#5	9"	10' – 8"	1,202	6' – 9"	760	108	#6	9"	36' – 6"	5,921	30	18"	39' – 9"	797	162	18"	39' – 9"	4,302	108	9"	6' – 0"	433	270	9"	4' – 9"	857	13' – 5"	2,420	39' – 10"	106	82	228	3.134	578.9	3.0	334	128.3	23,488

HL93 LOADING SHEET 2 OF 2

Texas Department of Transportation | Bridge Division Standard

MULTIPLE BOX CULVERTS
CAST-IN-PLACE
6'-0" SPAN
0' TO 16' FILL

MC-6-16

FILE: mc616ste-20.dgn	DN: TBE	CK: BMP	DW: TxDOT	CK: TxDOT
©TxDOT February 2020	CONT	SECT	JOB	HIGHWAY
REVISIONS	0912	73	215	FM 270, ETC
	DIST	COUNTY		SHEET NO.
	HOU	GALVESTON		241

DISCLAIMER:
The use of this standard is governed by the "Texas Engineering Practice Act". No warranty of any kind is made by TxDOT for any purpose whatsoever. TxDOT assumes no responsibility for the conversion of this standard to other formats or for incorrect results or damages resulting from its use.

DATE: 8/31/2023 10:22:44 AM
FILE: $FILE$

BOX DATA

SECTION DIMENSIONS					Fill Height	M (Min)	REINFORCING (sq. in. / ft.) (2)							(1) Lift Weight
S (ft.)	H (ft.)	TT (in.)	TB (in.)	TS (in.)	(ft.)	(in.)	AS1	AS2	AS3	AS4	AS5	AS7	AS8	(tons)
3	2	7	6	4	< 2	–	0.17	0.25	0.16	0.10	0.17	0.17	0.14	3.3
3	2	4	4	4	2 < 3	31	0.13	0.19	0.18	0.10	–	–	–	2.4
3	2	4	4	4	3 – 5	31	0.10	0.11	0.12	0.10	–	–	–	2.4
3	2	4	4	4	10	31	0.10	0.10	0.10	0.10	–	–	–	2.4
3	2	4	4	4	15	31	0.10	0.13	0.13	0.10	–	–	–	2.4
3	2	4	4	4	20	31	0.11	0.17	0.17	0.10	–	–	–	2.4
3	2	4	4	4	25	31	0.14	0.21	0.21	0.10	–	–	–	2.4
3	2	4	4	4	30	31	0.17	0.25	0.25	0.10	–	–	–	2.4
3	2	4	4	4	35	31	0.20	0.29	0.30	0.10	–	–	–	2.4
3	3	7	6	4	< 2	–	0.17	0.27	0.17	0.10	0.17	0.17	0.14	3.7
3	3	4	4	4	2 < 3	31	0.10	0.22	0.21	0.10	–	–	–	2.8
3	3	4	4	4	3 – 5	31	0.10	0.14	0.14	0.10	–	–	–	2.8
3	3	4	4	4	10	31	0.10	0.11	0.11	0.10	–	–	–	2.8
3	3	4	4	4	15	31	0.10	0.14	0.15	0.10	–	–	–	2.8
3	3	4	4	4	20	31	0.10	0.18	0.19	0.10	–	–	–	2.8
3	3	4	4	4	25	31	0.10	0.23	0.23	0.10	–	–	–	2.8
3	3	4	4	4	30	31	0.12	0.27	0.28	0.10	–	–	–	2.8
3	3	4	4	4	35	31	0.14	0.32	0.32	0.10	–	–	–	2.8

(1) For box length = 8'-0"

(2) AS1 thru AS4, AS7 and AS8 are minimum required areas of reinforcement per linear foot of box length. AS5 is minimum required area of reinforcement per linear foot of box width.

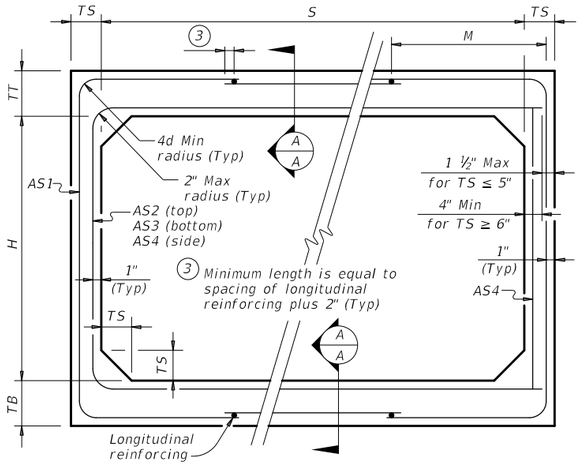

CORNER OPTION "A" CORNER OPTION "B"

FILL HEIGHT 2 FT AND GREATER

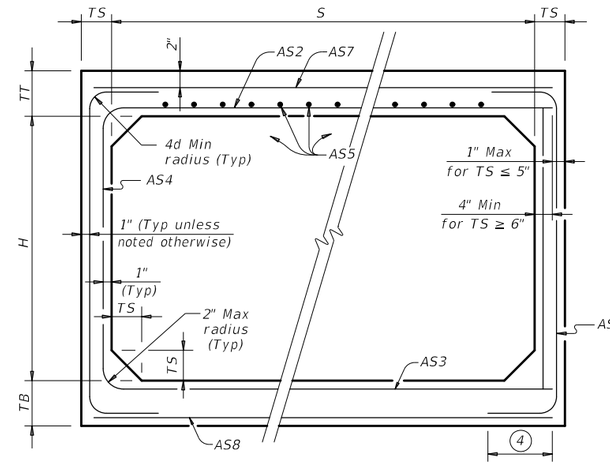

CORNER OPTION "A" CORNER OPTION "B"

FILL HEIGHT LESS THAN 2 FT

(4) Length is equal to spacing of longitudinal reinforcing plus 2". (10" Min) (Typ)

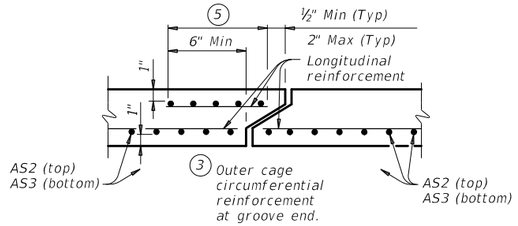

SECTION A-A

(Showing top and bottom slab joint reinforcement.)

MATERIAL NOTES:

Provide 0.03 sq. in./ft. minimum longitudinal reinforcement at each face in slabs and walls. This minimum requirement may be met by the transverse wires when wire mesh reinforcement is used.

Provide Class H concrete (f`c = 5,000 psi).

GENERAL NOTES:

Designs shown conform to ASTM C1577. Refer to ASTM C1577 for information or details not shown.

See Box Culverts Precast Miscellaneous Details (SCP-MD) standard sheet for details and notes not shown.

In lieu of furnishing the designs shown on this sheet, the contractor may furnish an alternate design that is equal to or exceeds the box design for the design fill height in the table. Submit shop plans for alternate designs in accordance with Item "Precast Concrete Structural Members (Fabrication)".

HL93 LOADING

Texas Department of Transportation

Bridge Division Standard

SINGLE BOX CULVERTS PRECAST

3'-0" SPAN

SCP-3

FILE: scp03sts-20.dgn	DN: TxDOT	CK: TxDOT	DW: TxDOT	CK: TxDOT
©TxDOT February 2020	CONT	SECT	JOB	HIGHWAY
REVISIONS	0912	73	215	FM 270, ETC
	DIST	COUNTY		SHEET NO.
	HOU	GALVESTON		242

DISCLAIMER:
The use of this standard is governed by the "Texas Engineering Practice Act". No warranty of any kind is made by TxDOT for any purpose whatsoever. TxDOT assumes no responsibility for the conversion of this standard to other formats or for incorrect results or damages resulting from its use.

DATE: 8/31/2023 10:22:46 AM
FILE: $FILE$

BOX DATA

SECTION DIMENSIONS					Fill Height	M (Min)	REINFORCING (sq. in. / ft.) (2)							(1) Lift Weight
S (ft.)	H (ft.)	TT (in.)	TB (in.)	TS (in.)	(ft.)	(in.)	AS1	AS2	AS3	AS4	AS5	AS7	AS8	(tons)
4	2	7.5	6	5	< 2	–	0.18	0.27	0.15	0.12	0.18	0.18	0.14	4.5
4	2	5	5	5	2 < 3	38	0.18	0.19	0.17	0.12	–	–	–	3.6
4	2	5	5	5	3 – 5	38	0.13	0.13	0.13	0.12	–	–	–	3.6
4	2	5	5	5	10	38	0.12	0.12	0.12	0.12	–	–	–	3.6
4	2	5	5	5	15	38	0.14	0.16	0.16	0.12	–	–	–	3.6
4	2	5	5	5	20	38	0.18	0.20	0.21	0.12	–	–	–	3.6
4	2	5	5	5	25	38	0.23	0.25	0.25	0.12	–	–	–	3.6
4	2	5	5	5	30	38	0.28	0.30	0.30	0.12	–	–	–	3.6
4	3	7.5	6	5	< 2	–	0.18	0.31	0.18	0.12	0.18	0.18	0.14	5.0
4	3	5	5	5	2 < 3	38	0.15	0.23	0.20	0.12	–	–	–	4.1
4	3	5	5	5	3 – 5	38	0.12	0.16	0.16	0.12	–	–	–	4.1
4	3	5	5	5	10	38	0.12	0.14	0.14	0.12	–	–	–	4.1
4	3	5	5	5	15	38	0.12	0.18	0.18	0.12	–	–	–	4.1
4	3	5	5	5	20	38	0.14	0.23	0.24	0.12	–	–	–	4.1
4	3	5	5	5	25	38	0.17	0.29	0.29	0.12	–	–	–	4.1
4	3	5	5	5	30	38	0.21	0.35	0.35	0.12	–	–	–	4.1
4	4	7.5	6	5	< 2	–	0.18	0.33	0.20	0.12	0.18	0.18	0.14	5.5
4	4	5	5	5	2 < 3	38	0.12	0.26	0.23	0.12	–	–	–	4.6
4	4	5	5	5	3 – 5	38	0.12	0.18	0.18	0.12	–	–	–	4.6
4	4	5	5	5	10	38	0.12	0.15	0.15	0.12	–	–	–	4.6
4	4	5	5	5	15	38	0.12	0.19	0.20	0.12	–	–	–	4.6
4	4	5	5	5	20	38	0.12	0.25	0.25	0.12	–	–	–	4.6
4	4	5	5	5	25	38	0.14	0.31	0.31	0.12	–	–	–	4.6
4	4	5	5	5	30	38	0.17	0.37	0.37	0.12	–	–	–	4.6

(1) For box length = 8'-0"

(2) AS1 thru AS4, AS7 and AS8 are minimum required areas of reinforcement per linear foot of box length. AS5 is minimum required area of reinforcement per linear foot of box width.

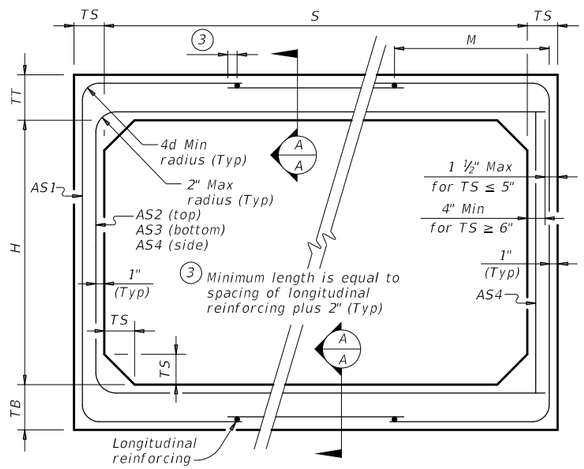

CORNER OPTION "A" CORNER OPTION "B"

FILL HEIGHT 2 FT AND GREATER

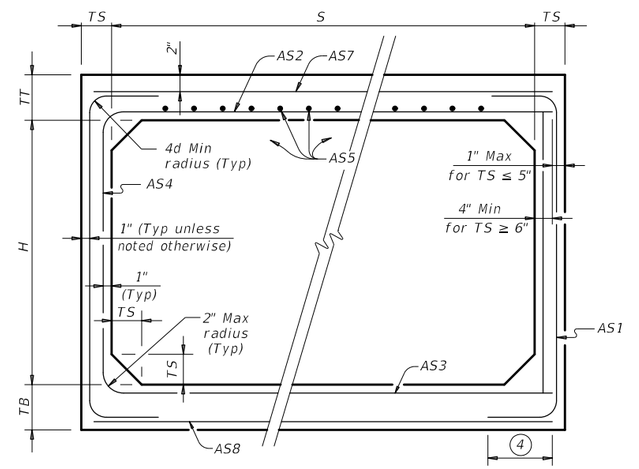

CORNER OPTION "A" CORNER OPTION "B"

FILL HEIGHT LESS THAN 2 FT

(4) Length is equal to spacing of longitudinal reinforcing plus 2". (10" Min) (Typ)

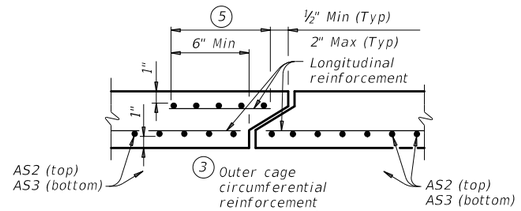

SECTION A-A

(Showing top and bottom slab joint reinforcement.)

MATERIAL NOTES:

Provide 0.03 sq. in./ft. minimum longitudinal reinforcement at each face in slabs and walls. This minimum requirement may be met by the transverse wires when wire mesh reinforcement is used.

Provide Class H concrete (f`c = 5,000 psi).

GENERAL NOTES:

Designs shown conform to ASTM C1577. Refer to ASTM C1577 for information or details not shown.

See Box Culverts Precast Miscellaneous Details (SCP-MD) standard sheet for details and notes not shown.

In lieu of furnishing the designs shown on this sheet, the contractor may furnish an alternate design that is equal to or exceeds the box design for the design fill height in the table. Submit shop plans for alternate designs in accordance with Item "Precast Concrete Structural Members (Fabrication)".

HL93 LOADING

Texas Department of Transportation

Bridge Division Standard

SINGLE BOX CULVERTS PRECAST

4'-0" SPAN

SCP-4

FILE: scp04sts-20.dgn	DN: TxDOT	CK: TxDOT	DW: TxDOT	CK: TxDOT
©TxDOT February 2020	CONT	SECT	JOB	HIGHWAY
REVISIONS	0912	73	215	FM 270, ETC
	DIST	COUNTY		SHEET NO.
	HOU	GALVESTON		243

DISCLAIMER:
The use of this standard is governed by the "Texas Engineering Practice Act". No warranty of any kind is made by TxDOT for any purpose whatsoever. TxDOT assumes no responsibility for the conversion of this standard to other formats or for incorrect results or damages resulting from its use.

DATE: 8/31/2023 10:22:48 AM
FILE: $FILE$

BOX DATA

SECTION DIMENSIONS					Fill Height	M (Min)	REINFORCING (sq. in. / ft.) (2)							(1) Lift Weight
S (ft.)	H (ft.)	TT (in.)	TB (in.)	TS (in.)	(ft.)	(in.)	AS1	AS2	AS3	AS4	AS5	AS7	AS8	(tons)
5	2	8	7	6	< 2	–	0.19	0.27	0.18	0.14	0.19	0.19	0.17	6.0
5	2	6	6	6	2 < 3	44	0.22	0.20	0.16	0.14	–	–	–	5.1
5	2	6	6	6	3 – 5	44	0.16	0.14	0.14	0.14	–	–	–	5.1
5	2	6	6	6	10	36	0.15	0.14	0.14	0.14	–	–	–	5.1
5	2	6	6	6	15	36	0.20	0.18	0.18	0.14	–	–	–	5.1
5	2	6	6	6	20	36	0.26	0.23	0.24	0.14	–	–	–	5.1
5	2	6	6	6	25	36	0.33	0.29	0.29	0.14	–	–	–	5.1
5	2	6	6	6	30	36	0.39	0.34	0.35	0.14	–	–	–	5.1
5	3	8	7	6	< 2	–	0.19	0.31	0.21	0.14	0.19	0.19	0.17	6.6
5	3	6	6	6	2 < 3	45	0.18	0.24	0.19	0.14	–	–	–	5.7
5	3	6	6	6	3 – 5	36	0.14	0.17	0.16	0.14	–	–	–	5.7
5	3	6	6	6	10	36	0.14	0.16	0.17	0.14	–	–	–	5.7
5	3	6	6	6	15	35	0.16	0.21	0.22	0.14	–	–	–	5.7
5	3	6	6	6	20	35	0.21	0.27	0.28	0.14	–	–	–	5.7
5	3	6	6	6	25	35	0.26	0.34	0.34	0.14	–	–	–	5.7
5	3	6	6	6	30	35	0.31	0.41	0.41	0.14	–	–	–	5.7
5	4	8	7	6	< 2	–	0.19	0.33	0.24	0.14	0.19	0.19	0.17	7.2
5	4	6	6	6	2 < 3	45	0.16	0.27	0.22	0.14	–	–	–	6.3
5	4	6	6	6	3 – 5	45	0.14	0.19	0.18	0.14	–	–	–	6.3
5	4	6	6	6	10	36	0.14	0.18	0.18	0.14	–	–	–	6.3
5	4	6	6	6	15	35	0.14	0.23	0.24	0.14	–	–	–	6.3
5	4	6	6	6	20	35	0.17	0.30	0.31	0.14	–	–	–	6.3
5	4	6	6	6	25	35	0.21	0.37	0.38	0.14	–	–	–	6.3
5	4	6	6	6	30	35	0.25	0.44	0.45	0.14	–	–	–	6.3
5	5	8	7	6	< 2	–	0.19	0.35	0.26	0.14	0.19	0.19	0.17	7.8
5	5	6	6	6	2 < 3	45	0.14	0.29	0.24	0.14	–	–	–	6.9
5	5	6	6	6	3 – 5	45	0.14	0.21	0.20	0.14	–	–	–	6.9
5	5	6	6	6	10	45	0.14	0.19	0.20	0.14	–	–	–	6.9
5	5	6	6	6	15	36	0.14	0.24	0.25	0.14	–	–	–	6.9
5	5	6	6	6	20	35	0.15	0.31	0.32	0.14	–	–	–	6.9
5	5	6	6	6	25	35	0.18	0.38	0.39	0.14	–	–	–	6.9
5	5	6	6	6	30	35	0.21	0.46	0.47	0.14	–	–	–	6.9

(1) For box length = 8'-0"

(2) AS1 thru AS4, AS7 and AS8 are minimum required areas of reinforcement per linear foot of box length. AS5 is minimum required area of reinforcement per linear foot of box width.

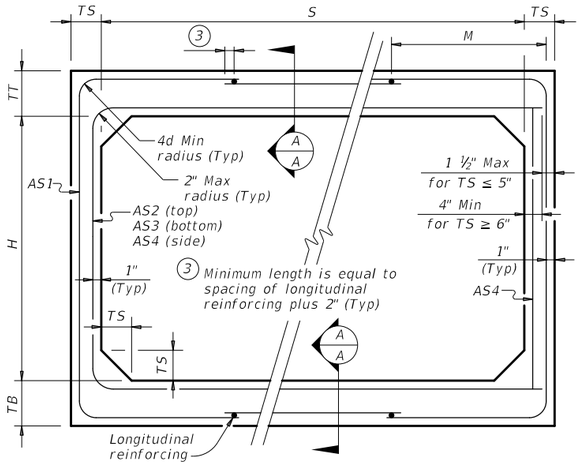

CORNER OPTION "A" CORNER OPTION "B"

FILL HEIGHT 2 FT AND GREATER

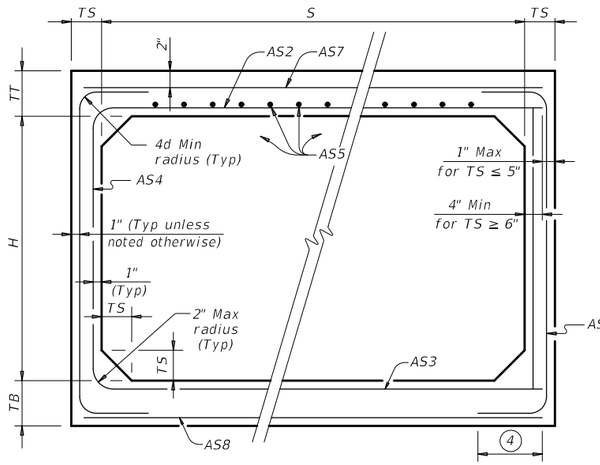

CORNER OPTION "A" CORNER OPTION "B"

FILL HEIGHT LESS THAN 2 FT

(4) Length is equal to spacing of longitudinal reinforcing plus 2". (10" Min) (Typ)

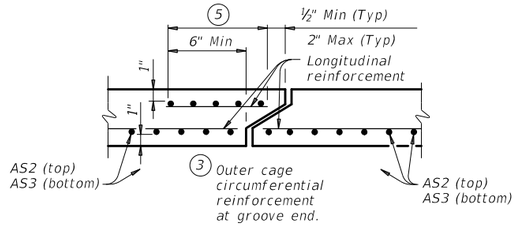

SECTION A-A

(Showing top and bottom slab joint reinforcement.)

MATERIAL NOTES:

Provide 0.03 sq. in./ft. minimum longitudinal reinforcement at each face in slabs and walls. This minimum requirement may be met by the transverse wires when wire mesh reinforcement is used.

Provide Class H concrete (f`c = 5,000 psi).

GENERAL NOTES:

Designs shown conform to ASTM C1577. Refer to ASTM C1577 for information or details not shown.

See Box Culverts Precast Miscellaneous Details (SCP-MD) standard sheet for details and notes not shown.

In lieu of furnishing the designs shown on this sheet, the contractor may furnish an alternate design that is equal to or exceeds the box design for the design fill height in the table. Submit shop plans for alternate designs in accordance with Item "Precast Concrete Structural Members (Fabrication)".

HL93 LOADING

Texas Department of Transportation

Bridge Division Standard

SINGLE BOX CULVERTS PRECAST

5'-0" SPAN

SCP-5

FILE: scp05sts-20.dgn	DN: TxDOT	CK: TxDOT	DW: TxDOT	CK: TxDOT
©TxDOT February 2020	CONT	SECT	JOB	HIGHWAY
REVISIONS	0912	73	215	FM 270, ETC
	DIST	COUNTY		SHEET NO.
	HOU	GALVESTON		244

DISCLAIMER:
The use of this standard is governed by the "Texas Engineering Practice Act". No warranty of any kind is made by TxDOT for any purpose whatsoever. TxDOT assumes no responsibility for the conversion of this standard to other formats or for incorrect results or damages resulting from its use.

DATE: 8/31/2023 10:22:52 AM
FILE: $FILE$

BOX DATA

SECTION DIMENSIONS					Fill Height	M (Min)	REINFORCING (sq. in. / ft.) (2)							(1) Lift Weight
S (ft.)	H (ft.)	TT (in.)	TB (in.)	TS (in.)	(ft.)	(in.)	AS1	AS2	AS3	AS4	AS5	AS7	AS8	(tons)
8	3	8	8	8	< 2	–	0.31	0.35	0.25	0.19	0.19	0.19	0.19	10.4
8	3	8	8	8	2 < 3	55	0.35	0.29	0.28	0.19	–	–	–	10.4
8	3	8	8	8	3 – 5	50	0.28	0.23	0.24	0.19	–	–	–	10.4
8	3	8	8	8	10	45	0.29	0.25	0.26	0.19	–	–	–	10.4
8	3	8	8	8	15	45	0.39	0.33	0.34	0.19	–	–	–	10.4
8	3	8	8	8	20	45	0.51	0.43	0.44	0.19	–	–	–	10.4
8	3	8	8	8	25	45	0.63	0.53	0.54	0.19	–	–	–	10.4
8	4	8	8	8	< 2	–	0.27	0.38	0.29	0.19	0.19	0.19	0.19	11.2
8	4	8	8	8	2 < 3	50	0.31	0.34	0.32	0.19	–	–	–	11.2
8	4	8	8	8	3 – 5	50	0.25	0.27	0.27	0.19	–	–	–	11.2
8	4	8	8	8	10	45	0.26	0.28	0.29	0.19	–	–	–	11.2
8	4	8	8	8	15	41	0.34	0.37	0.38	0.19	–	–	–	11.2
8	4	8	8	8	20	41	0.44	0.48	0.49	0.19	–	–	–	11.2
8	5	8	8	8	< 2	–	0.24	0.40	0.32	0.19	0.19	0.19	0.19	12.0
8	5	8	8	8	2 < 3	50	0.28	0.37	0.35	0.19	–	–	–	12.0
8	5	8	8	8	3 – 5	45	0.23	0.29	0.30	0.19	–	–	–	12.0
8	5	8	8	8	10	45	0.23	0.31	0.32	0.19	–	–	–	12.0
8	5	8	8	8	15	41	0.30	0.41	0.42	0.19	–	–	–	12.0
8	5	8	8	8	20	41	0.39	0.52	0.54	0.19	–	–	–	12.0
8	6	8	8	8	< 2	–	0.22	0.42	0.35	0.19	0.19	0.19	0.19	12.8
8	6	8	8	8	2 < 3	50	0.25	0.40	0.38	0.19	–	–	–	12.8
8	6	8	8	8	3 – 5	50	0.21	0.32	0.33	0.19	–	–	–	12.8
8	6	8	8	8	10	45	0.22	0.33	0.34	0.19	–	–	–	12.8
8	6	8	8	8	15	41	0.28	0.43	0.45	0.19	–	–	–	12.8
8	6	8	8	8	20	41	0.36	0.55	0.57	0.19	–	–	–	12.8
8	7	8	8	8	< 2	–	0.20	0.44	0.37	0.19	0.19	0.19	0.19	13.6
8	7	8	8	8	2 < 3	55	0.23	0.43	0.41	0.19	–	–	–	13.6
8	7	8	8	8	3 – 5	55	0.19	0.34	0.35	0.19	–	–	–	13.6
8	7	8	8	8	10	50	0.20	0.34	0.36	0.19	–	–	–	13.6
8	7	8	8	8	15	41	0.26	0.45	0.47	0.19	–	–	–	13.6
8	7	8	8	8	20	41	0.33	0.57	0.60	0.19	–	–	–	13.6
8	8	8	8	8	< 2	–	0.20	0.45	0.40	0.19	0.19	0.19	0.19	14.4
8	8	8	8	8	2 < 3	65	0.21	0.45	0.44	0.19	–	–	–	14.4
8	8	8	8	8	3 – 5	65	0.19	0.36	0.38	0.19	–	–	–	14.4
8	8	8	8	8	10	55	0.19	0.35	0.38	0.19	–	–	–	14.4
8	8	8	8	8	15	45	0.24	0.46	0.49	0.19	–	–	–	14.4
8	8	8	8	8	20	45	0.31	0.59	0.62	0.19	–	–	–	14.4

(1) For box length = 8'-0"

(2) AS1 thru AS4, AS7 and AS8 are minimum required areas of reinforcement per linear foot of box length. AS5 is minimum required area of reinforcement per linear foot of box width.

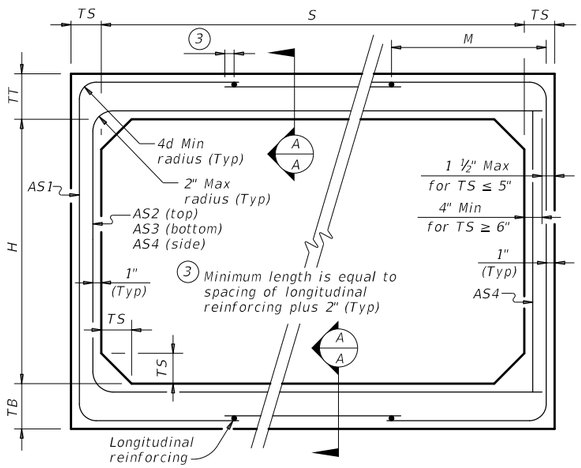

CORNER OPTION "A" CORNER OPTION "B"

FILL HEIGHT 2 FT AND GREATER

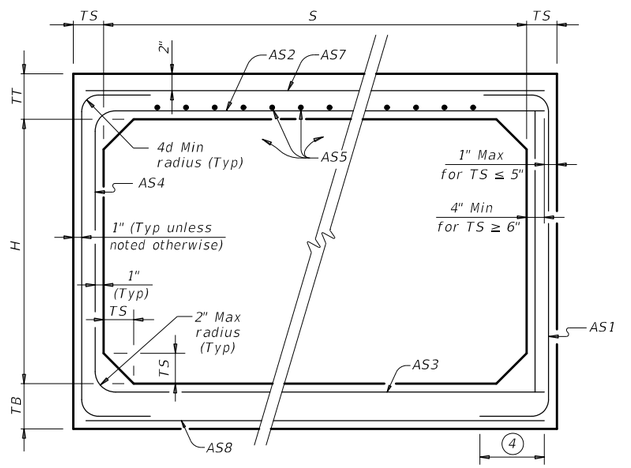

CORNER OPTION "A" CORNER OPTION "B"

FILL HEIGHT LESS THAN 2 FT

(4) Length is equal to spacing of longitudinal reinforcing plus 2". (10" Min) (Typ)

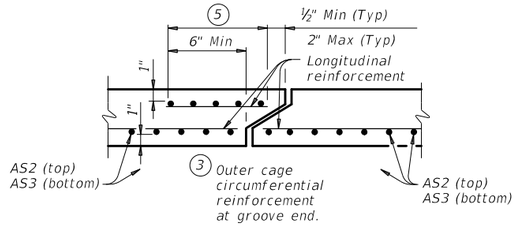

SECTION A-A

(Showing top and bottom slab joint reinforcement.)

MATERIAL NOTES:

Provide 0.03 sq. in./ft. minimum longitudinal reinforcement at each face in slabs and walls. This minimum requirement may be met by the transverse wires when wire mesh reinforcement is used.

Provide Class H concrete (f`c = 5,000 psi).

GENERAL NOTES:

Designs shown conform to ASTM C1577. Refer to ASTM C1577 for information or details not shown.

See Box Culverts Precast Miscellaneous Details (SCP-MD) standard sheet for details and notes not shown.

In lieu of furnishing the designs shown on this sheet, the contractor may furnish an alternate design that is equal to or exceeds the box design for the design fill height in the table. Submit shop plans for alternate designs in accordance with Item "Precast Concrete Structural Members (Fabrication)".

HL93 LOADING

Texas Department of Transportation

Bridge Division Standard

SINGLE BOX CULVERTS PRECAST

8'-0" SPAN

SCP-8

FILE: scp08sts-20.dgn	DN: TxDOT	CK: TxDOT	DW: TxDOT	CK: TxDOT
©TxDOT February 2020	CONT	SECT	JOB	HIGHWAY
REVISIONS	0912	73	215	FM 270, ETC
	DIST	COUNTY		SHEET NO.
	HOU	GALVESTON		245

DISCLAIMER:
The use of this standard is governed by the "Texas Engineering Practice Act". No warranty of any kind is made by TxDOT for any purpose whatsoever. TxDOT assumes no responsibility for the conversion of this standard to other formats or for incorrect results or damages resulting from its use.

DATE: 8/31/2023 10:22:54 AM
FILE: $FILE$

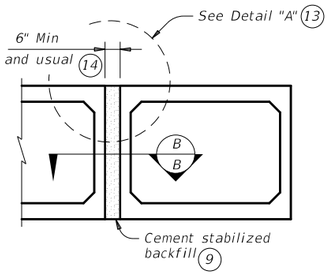

MULTIPLE UNIT PLACEMENT

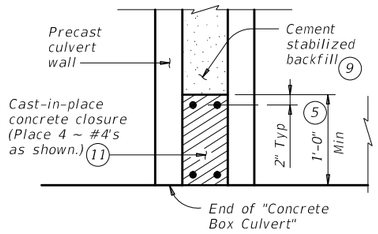

SECTION B-B

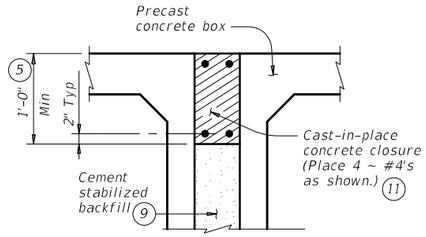

DETAIL "A" (13)

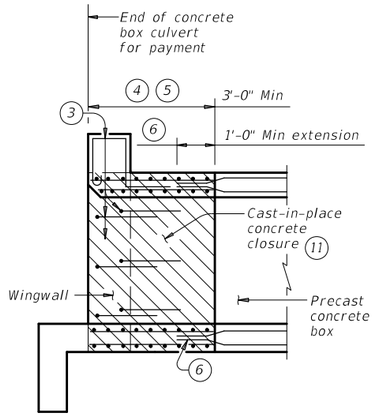

WINGWALL CONNECTION

(Also applies to safety end treatment.)

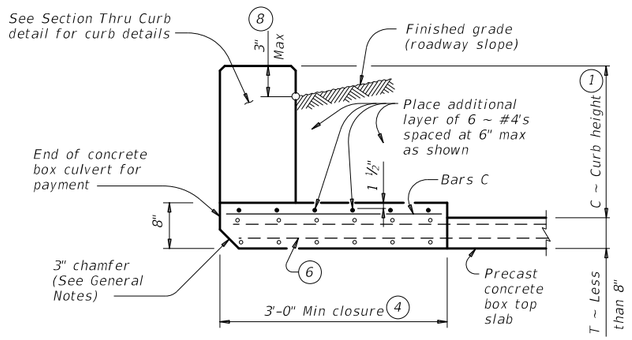

SECTION THRU TOP SLABS LESS THAN 8"

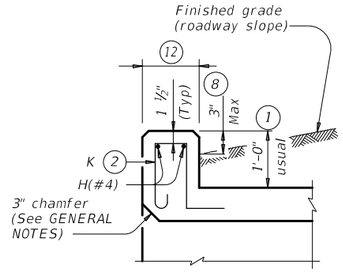

SECTION THRU CURB

QUANTITIES PER FOOT OF CURB (10)	
Reinforcing Steel	4.12 Lb
Concrete	0.037 CY

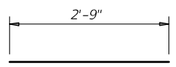

BARS C (#4)
(Spa = 1'–0" Max)

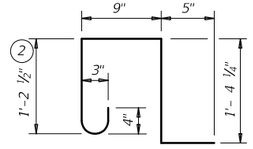

BARS K (#4)
(Spa = 1'–0" Max)
(Length = 4'–2")

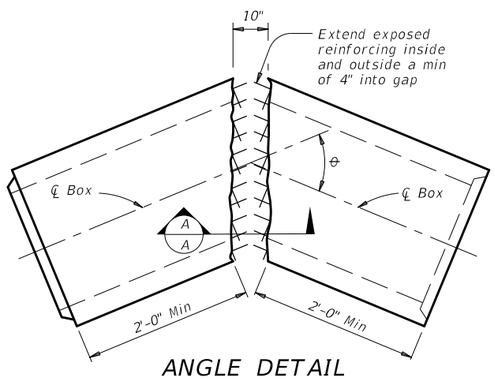

ANGLE DETAIL

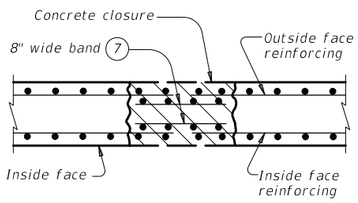

SECTION A-A

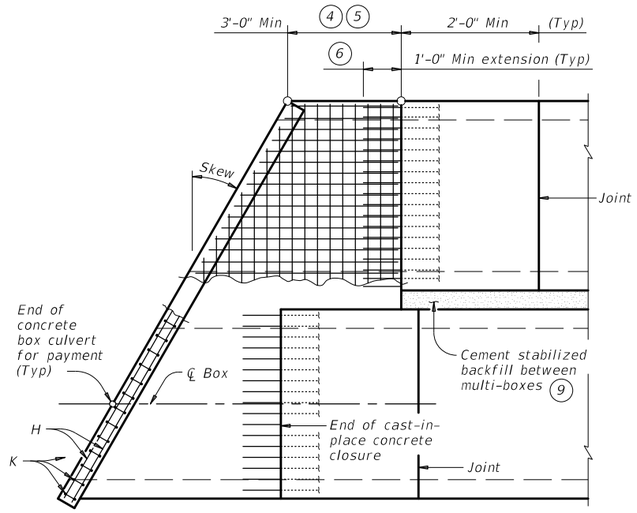

PLAN OF SKEWED ENDS

(Showing multi-box placement.)

1. 0" Min to 5'–0" Max. Estimated curb heights are shown elsewhere in the plans. For structures with pedestrian rail, bicycle rail, or curbs taller than 1'–0, refer to the Extended Curb Details (ECD) standard sheet. For structures with T631 or T631LS bridge rail, refer to the Mounting Details for T631 & T631LS Rails (T631–CM) standard sheet. Refer to the Box Culvert Rail Mounting Details (RAC) standard sheet for structures with bridge rail other than T631 or T631LS.
2. For curbs less than 1'–0" high, tilt Bars K or reduce bar height as necessary to maintain cover. For curbs less than 3" high, Bars K may be omitted.
3. Extend curb, wingwall, or safety end treatment reinforcing into concrete closure. Bend or trim, as necessary, any reinforcing that does not fit into closure area.
4. Provide a 3'–0" Min cast–in–place concrete closure. Break back boxes in the field or cast boxes short. Provide bands of reinforcing in the closure that are the same size and spacing as in the precast box section. Provide #4 longitudinal reinforcement spaced at 12 inches Max within the closure. Except where shown otherwise, construct the cast–in–place closure flush with the inside and outside faces of the precast box section.
5. For multiple unit placements, adjust the length of the closure for the interior walls as necessary. Provide a 3'–0" Min cast–in–place closure in the top slab, bottom slab, and exterior wall. See Section B–B detail when interior walls are cast full length.
6. Extend precast box reinforcing a minimum of 1'–0" into concrete closure (Typ).
7. Place bands of reinforcing matching the inside and outside face reinforcing in the gaps of the top and bottom slabs. Place a band matching the outside face reinforcing of the wall in the gaps of the walls (placed in the outside face only). Tack weld the bands to the exposed reinforcing at each point of contact.
8. For vehicle safety, the following requirements must be met:
   - For structures without bridge rail, construct curbs no more than 3" above finished grade.
   - For structures with bridge rail, construct curbs flush with finished grade.

   Reduce curb heights, if necessary, to meet the above requirements. No changes will be made in quantities and no additional compensation will be allowed for this work.
9. Cement stabilized backfill between boxes is considered part of the box culvert for payment.
10. All curb concrete and reinforcing is considered part of the box culvert for payment.
11. Any additional concrete and reinforcing required for the closures will be considered subsidiary to the box culvert for payment.
12. 1'–0" typical. 2'–3" when the Box Culvert Rail Mounting Details (RAC) standard sheet is referred to elsewhere in the plans.
13. For multiple unit placement with overlay, with 1 to 2 course surface treatment, or with the top slab as the final riding surface, provide wall closure as shown in Detail "A".
14. This dimension may be increased with approval of the Engineer to allow the precast boxes to be tunneled or jacked in accordance with Item 476, "Jacking, Boring, or Tunneling Pipe or Box". No payment will be made for any additional material in the gap between adjacent boxes.

MATERIAL NOTES:

Provide Grade 60 reinforcing steel.
Provide ASTM A1064 welded wire reinforcement.
Provide Class C concrete (f'c = 3,600 psi) for the closures.
Provide cement stabilized backfill meeting the requirements of Item 400, "Excavation and Backfill for Structures."
Any additional concrete required for the closures will be considered subsidiary to the box culvert.

GENERAL NOTES:

Designed according to AASHTO LRFD Bridge Design Specifications.
Refer to the Single Box Culverts Precast (SCP) standard sheets for details and notes not shown.
Chamfer the bottom edge of the top slab closure 3 inches at culvert closure ends.

Cover dimensions are clear dimensions, unless noted otherwise.
Reinforcing bars dimensions are out–to–out of bars.

HL93 LOADING

Texas Department of Transportation

Bridge Division Standard

BOX CULVERTS PRECAST MISCELLANEOUS DETAILS

SCP-MD

FILE: scpmdsts-20.dgn	DN: GAF	CK: LMW	DW: BWH/TxDOT	CK: GAF
©TxDOT February 2020	CONT	SECT	JOB	HIGHWAY
REVISIONS	0912	73	215	FM 270, ETC
	DIST	COUNTY		SHEET NO.
	HOU	GALVESTON		246

DISCLAIMER:
The use of this standard is governed by the "Texas Engineering Practice Act". No warranty of any kind is made by TxDOT for any purpose whatsoever. TxDOT assumes no responsibility for the conversion of this standard to other formats or for incorrect results or damages resulting from its use.

DATE: 8/31/2023 10:22:57 AM
FILE: $FILE$

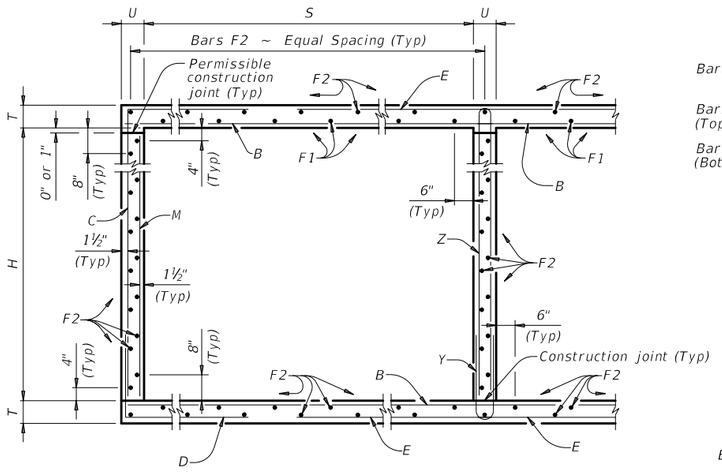

TYPICAL SECTION

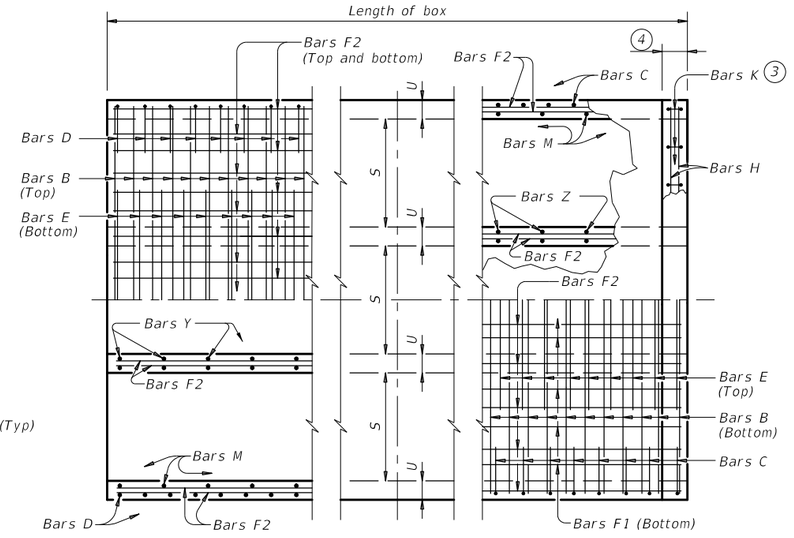

PART PLANS

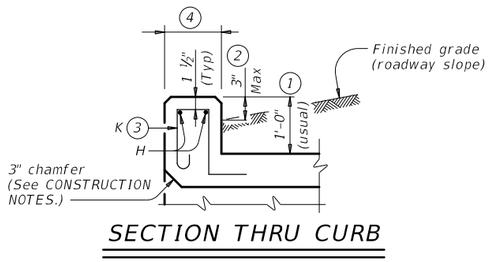

SECTION THRU CURB

TABLE OF BAR DIMENSIONS		
H	"X"	"Y"
2'-0"	2'-6 ½"	3'-8 ½"
3'-0"	3'-6 ½"	3'-8 ½"
4'-0"	4'-6 ½"	3'-8 ½"
5'-0"	5'-6 ½"	3'-8 ½"

1. 0" Min to 5'-0" Max. Estimated curb heights are shown elsewhere in the plans. For structures with pedestrian rail or curbs taller than 1'-0", refer to the Extended Curb Details (ECD) standard sheet. For structures with T631 or T631LS bridge rail, refer to the Mounting Details for T631 & T631LS Rails (T631-CM) standard sheet. Refer to the Rail Anchorage Curb (RAC) standard sheet for structures with bridge rail other than T631 or T631LS.
2. For vehicle safety, the following requirements must be met:
   - For structures without bridge rail, construct curbs no more than 3" above finished grade.
   - For structures with bridge rail, construct curbs flush with finished grade.

   Reduce curb heights, if necessary, to meet the above requirements. No changes will be made in quantities and no additional compensation will be allowed for this work.
3. For curbs less than 1'-0" high, tilt Bars K or reduce bar height as necessary to maintain cover. For curbs less than 3" high, Bars K may be omitted.
4. 1'-0" typical. 2'-3" when the Rail Anchorage Curb (RAC) standard sheet is referred to elsewhere in the plans.

The Contractor may replace Bars B, C, D, E, F1, F2, M, Y, and/or Z with deformed welded wire reinforcement (WWR) meeting the requirements of ASTM A1064. The area of required reinforcement may be reduced by the ratio of 60 ksi / 70 ksi. Spacing of WWR is limited to 4" Min and 18" Max. When required, provide lap splices in the WWR of the same length required for the equivalent bar size, rounded up for wire sizes between conventional bar sizes. The lap length required for WWR is never less than the lap length required for uncoated #4 bars.

Example conversion: Replacing No. 6 Gr 60 at 6" Spacing with WWR
Required WWR = (0.44 sq. in. per 0.5 ft.) x (60 ksi / 70 ksi) = 0.755 sq. in. per ft.
If D30.6 wire is used to meet the 0.755 sq. in. per ft. requirement in this example, the required spacing = (0.306 sq. in.) / (0.755 sq. in. per ft.) x (12 in. per ft.) = 4.86" Max spacing. Required lap length for the provided D30.6 wire is 2'-1" (the same minimum lap length required for uncoated #5 bars, as listed under MATERIAL NOTES).

CONSTRUCTION NOTES:

Do not use permanent forms.
Chamfer the bottom edge of the top slab 3" at the entrance.
Optionally, raise construction joints shown at the flow line by a maximum of 6". If this option is taken, Bars M may be cut off or raised, Bars C and D may be reversed, and Bars Y and Z may be reversed.

MATERIAL NOTES:

Provide Grade 60 reinforcing steel.
Provide galvanized reinforcing steel if required elsewhere in the plans.
Provide Class C concrete (f'c = 3,600 psi) for culvert barrel and curb.
Provide bar laps, where required, as follows:
- Uncoated or galvanized ~ #4 = 1'-8" Min
- Uncoated or galvanized ~ #5 = 2'-1" Min
- Uncoated or galvanized ~ #6 = 2'-6" Min

GENERAL NOTES:

Designed according to AASHTO LRFD Bridge Design Specifications for the range of fill heights shown.
See the Multiple Box Culverts Cast-In-Place Miscellaneous Detail (MC-MD) standard sheet for details pertaining to skewed ends, angle sections, and lengthening.

Cover dimensions are clear dimensions, unless noted otherwise.
Reinforcing bar dimensions shown are out-to-out of bar.

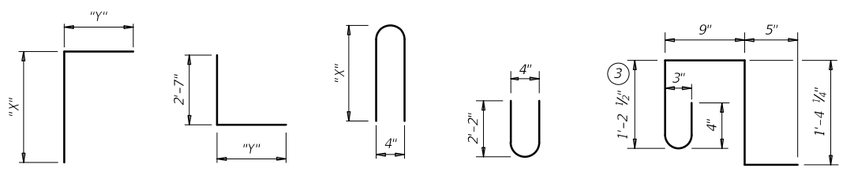

HL93 LOADING SHEET 1 OF 2

Texas Department of Transportation — Bridge Division Standard

MULTIPLE BOX CULVERTS CAST-IN-PLACE
5'-0" SPAN
2' TO 23' FILL

MC-5-23

FILE: mc523ste-20.dgn	DN: TBE	CK: BMP	DW: TxDOT	CK: TxDOT
©TxDOT February 2020	CONT	SECT	JOB	HIGHWAY
REVISIONS	0912	73	215	FM 270, ETC
	DIST	COUNTY		SHEET NO.
	HOU	GALVESTON		247

NUMBER OF SPANS	SECTION DIMENSIONS				BILLS OF REINFORCING STEEL (For Box Length = 40 feet)																																QUANTITIES					
					Bars B					Bars C & D							Bars E					Bars F1 ~ #4				Bars F2 ~ #4				Bars M ~ #4				Bars Y & Z ~ #4								Bars H 4 ~ #4		Bars K		Per Foot of Barrel		Curb		Total	
	S	H	T	U	No.	Size	Spa	Length	Wt	No.	Size	Spa	Bars C Length	Bars C Wt	Bars D Length	Bars D Wt	No.	Size	Spa	Length	Wt	No.	Spa	Length	Wt	No.	Spa	Length	Wt	No.	Spa	Length	Wt	No.	Spa	Bars Y Length	Bars Y Wt	Bars Z Length	Bars Z Wt	Length	Wt	No.	Wt	Conc (CY)	Renf (Lb)	Conc (CY)	Renf (Lb)	Conc (CY)	Renf (Lb)
2	5' – 0"	2' – 0"	8"	7"	108	#5	9"	11' – 6"	1,295	108	#5	9"	6' – 3"	704	6' – 4"	713	108	#5	9"	5' – 8"	638	8	18"	39' – 9"	212	38	18"	39' – 9"	1,009	108	9"	2' – 0"	144	54	9"	4' – 7"	165	5' – 3"	189	11' – 6"	31	26	72	0.710	126.7	0.9	103	29.3	5,172
3	5' – 0"	2' – 0"	8"	7"	108	#5	9"	17' – 1"	1,924	108	#5	9"	6' – 3"	704	6' – 4"	713	108	#5	9"	10' – 8"	1,202	12	18"	39' – 9"	319	54	18"	39' – 9"	1,434	108	9"	2' – 0"	144	108	9"	4' – 7"	331	5' – 3"	379	17' – 1"	46	38	106	1.029	178.8	1.3	152	42.4	7,302
4	5' – 0"	2' – 0"	8"	7"	108	#5	9"	22' – 8"	2,553	108	#5	9"	6' – 3"	704	6' – 4"	713	108	#5	9"	15' – 8"	1,765	16	18"	39' – 9"	425	70	18"	39' – 9"	1,859	108	9"	2' – 0"	144	162	9"	4' – 7"	496	5' – 3"	568	22' – 8"	61	48	134	1.348	230.7	1.7	195	55.6	9,422
5	5' – 0"	2' – 0"	8"	7"	108	#5	9"	28' – 3"	3,182	108	#5	9"	6' – 3"	704	6' – 4"	713	108	#5	9"	20' – 8"	2,328	20	18"	39' – 9"	531	86	18"	39' – 9"	2,284	108	9"	2' – 0"	144	216	9"	4' – 7"	661	5' – 3"	758	28' – 3"	75	60	167	1.667	282.6	2.1	242	68.8	11,547
6	5' – 0"	2' – 0"	8"	7"	108	#5	9"	33' – 10"	3,811	108	#5	9"	6' – 3"	704	6' – 4"	713	108	#5	9"	25' – 8"	2,891	24	18"	39' – 9"	637	102	18"	39' – 9"	2,708	108	9"	2' – 0"	144	270	9"	4' – 7"	827	5' – 3"	947	33' – 10"	90	70	195	1.986	334.6	2.5	285	82.0	13,667
2	5' – 0"	3' – 0"	8"	7"	108	#6	9"	11' – 6"	1,865	108	#5	9"	7' – 3"	817	6' – 4"	713	108	#5	9"	5' – 8"	638	8	18"	39' – 9"	212	44	18"	39' – 9"	1,168	108	9"	3' – 0"	216	54	9"	4' – 7"	165	7' – 3"	262	11' – 6"	31	26	72	0.775	151.4	0.9	103	31.9	6,159
3	5' – 0"	3' – 0"	8"	7"	108	#6	9"	17' – 1"	2,771	108	#5	9"	7' – 3"	817	6' – 4"	713	108	#5	9"	10' – 8"	1,202	12	18"	39' – 9"	319	62	18"	39' – 9"	1,646	108	9"	3' – 0"	216	108	9"	4' – 7"	331	7' – 3"	523	17' – 1"	46	38	106	1.115	213.5	1.3	152	45.9	8,690
4	5' – 0"	3' – 0"	8"	7"	108	#6	9"	22' – 8"	3,677	108	#5	9"	7' – 3"	817	6' – 4"	713	108	#5	9"	15' – 8"	1,765	16	18"	39' – 9"	425	80	18"	39' – 9"	2,124	108	9"	3' – 0"	216	162	9"	4' – 7"	496	7' – 3"	785	22' – 8"	61	48	134	1.456	275.5	1.7	195	59.9	11,213
5	5' – 0"	3' – 0"	8"	7"	108	#6	9"	28' – 3"	4,583	108	#5	9"	7' – 3"	817	6' – 4"	713	108	#5	9"	20' – 8"	2,328	20	18"	39' – 9"	531	98	18"	39' – 9"	2,602	108	9"	3' – 0"	216	216	9"	4' – 7"	661	7' – 3"	1,046	28' – 3"	75	60	167	1.796	337.4	2.1	242	73.9	13,739
6	5' – 0"	3' – 0"	8"	7"	108	#6	9"	33' – 10"	5,488	108	#5	9"	7' – 3"	817	6' – 4"	713	108	#5	9"	25' – 8"	2,891	24	18"	39' – 9"	637	116	18"	39' – 9"	3,080	108	9"	3' – 0"	216	270	9"	4' – 7"	827	7' – 3"	1,308	33' – 10"	90	70	195	2.137	399.4	2.5	285	88.0	16,262
2	5' – 0"	4' – 0"	8"	7"	108	#6	9"	11' – 6"	1,865	108	#5	9"	8' – 3"	929	6' – 4"	713	108	#5	9"	5' – 8"	638	8	18"	39' – 9"	212	44	18"	39' – 9"	1,168	108	9"	4' – 0"	289	54	9"	4' – 7"	165	9' – 3"	334	11' – 6"	31	26	72	0.840	157.8	0.9	103	34.5	6,416
3	5' – 0"	4' – 0"	8"	7"	108	#6	9"	17' – 1"	2,771	108	#5	9"	8' – 3"	929	6' – 4"	713	108	#5	9"	10' – 8"	1,202	12	18"	39' – 9"	319	62	18"	39' – 9"	1,646	108	9"	4' – 0"	289	108	9"	4' – 7"	331	9' – 3"	667	17' – 1"	46	38	106	1.202	221.7	1.3	152	49.4	9,019
4	5' – 0"	4' – 0"	8"	7"	108	#6	9"	22' – 8"	3,677	108	#5	9"	8' – 3"	929	6' – 4"	713	108	#5	9"	15' – 8"	1,765	16	18"	39' – 9"	425	80	18"	39' – 9"	2,124	108	9"	4' – 0"	289	162	9"	4' – 7"	496	9' – 3"	1,001	22' – 8"	61	48	134	1.564	285.5	1.7	195	64.3	11,614
5	5' – 0"	4' – 0"	8"	7"	108	#6	9"	28' – 3"	4,583	108	#5	9"	8' – 3"	929	6' – 4"	713	108	#5	9"	20' – 8"	2,328	20	18"	39' – 9"	531	98	18"	39' – 9"	2,602	108	9"	4' – 0"	289	216	9"	4' – 7"	661	9' – 3"	1,335	28' – 3"	75	60	167	1.926	349.3	2.1	242	79.1	14,213
6	5' – 0"	4' – 0"	8"	7"	108	#6	9"	33' – 10"	5,488	108	#5	9"	8' – 3"	929	6' – 4"	713	108	#5	9"	25' – 8"	2,891	24	18"	39' – 9"	637	116	18"	39' – 9"	3,080	108	9"	4' – 0"	289	270	9"	4' – 7"	827	9' – 3"	1,668	33' – 10"	90	70	195	2.288	413.1	2.5	285	94.0	16,807
2	5' – 0"	5' – 0"	8"	7"	108	#6	9"	11' – 6"	1,865	108	#5	9"	9' – 3"	1,042	6' – 4"	713	108	#5	9"	5' – 8"	638	8	18"	39' – 9"	212	50	18"	39' – 9"	1,328	108	9"	5' – 0"	361	54	9"	4' – 7"	165	11' – 3"	406	11' – 6"	31	26	72	0.904	168.3	0.9	103	37.0	6,833
3	5' – 0"	5' – 0"	8"	7"	108	#6	9"	17' – 1"	2,771	108	#5	9"	9' – 3"	1,042	6' – 4"	713	108	#5	9"	10' – 8"	1,202	12	18"	39' – 9"	319	70	18"	39' – 9"	1,859	108	9"	5' – 0"	361	108	9"	4' – 7"	331	11' – 3"	812	17' – 1"	46	38	106	1.288	235.3	1.3	152	52.8	9,562
4	5' – 0"	5' – 0"	8"	7"	108	#6	9"	22' – 8"	3,677	108	#5	9"	9' – 3"	1,042	6' – 4"	713	108	#5	9"	15' – 8"	1,765	16	18"	39' – 9"	425	90	18"	39' – 9"	2,390	108	9"	5' – 0"	361	162	9"	4' – 7"	496	11' – 3"	1,217	22' – 8"	61	48	134	1.672	302.2	1.7	195	68.6	12,281
5	5' – 0"	5' – 0"	8"	7"	108	#6	9"	28' – 3"	4,583	108	#5	9"	9' – 3"	1,042	6' – 4"	713	108	#5	9"	20' – 8"	2,328	20	18"	39' – 9"	531	110	18"	39' – 9"	2,921	108	9"	5' – 0"	361	216	9"	4' – 7"	661	11' – 3"	1,623	28' – 3"	75	60	167	2.056	369.1	2.1	242	84.3	15,005
6	5' – 0"	5' – 0"	8"	7"	108	#6	9"	33' – 10"	5,488	108	#5	9"	9' – 3"	1,042	6' – 4"	713	108	#5	9"	25' – 8"	2,891	24	18"	39' – 9"	637	130	18"	39' – 9"	3,452	108	9"	5' – 0"	361	270	9"	4' – 7"	827	11' – 3"	2,029	33' – 10"	90	70	195	2.439	436.0	2.5	285	100.1	17,725

DISCLAIMER:
The use of this standard is governed by the "Texas Engineering Practice Act". No warranty of any kind is made by TxDOT for any purpose whatsoever. TxDOT assumes no responsibility for the conversion of this standard to other formats or for incorrect results or damages resulting from its use.

DATE: 8/31/2023 10:22:57 AM
FILE: $FILE$

HL93 LOADING SHEET 2 OF 2

Texas Department of Transportation

Bridge Division Standard

MULTIPLE BOX CULVERTS CAST-IN-PLACE

5'-0" SPAN
2' TO 23' FILL

MC-5-23

FILE: mc523ste-20.dgn	DN: TBE	CK: BMP	DW: TxDOT	CK: TxDOT
©TxDOT February 2020	CONT	SECT	JOB	HIGHWAY
REVISIONS	0912	73	215	FM 270, ETC
	DIST	COUNTY		SHEET NO.
	HOU	GALVESTON		248

PLOTDRIVER: LCBF - UTIL Color.pltcfg PENTABLE:LCBF.tbl

DATE:7/26/2023 11:14:57 AM USER:Beth.Bowden
FILE:c:\bms\pwe101-01\beth bowden\dms22655\LCBF_UTIL00.dgn

LEGEND OF UTILITY TYPES

COMMUNICATIONS

CATV - COMCAST (QL-D)	TV1(D)
OH CATV - COMCAST	OTV1
TELEPHONE - FRONTIER (QL-B)	T1
TELEPHONE - FRONTIER (QL-D)	T1(D)
FIBER - FRONTIER (QL-B)	FO1
FIBER - FRONTIER (QL-D)	FO1(D)
FIBER - MCI BUSINESS (QL-D)	FO2(D)
FIBER - PURESPEED (QL-B)	FO3
FIBER - PURESPEED (QL-D)	FO3(D)
FIBER - PHONOSCOPE (QL-D)	FO4(D)
FIBER - COMCAST (QL-D)	FO5(D)
FIBER - ATT (QL-D)	FO6(D)
OH FIBER - FRONTIER	OFO1
OH FIBER - PURESPEED	OFO3

ELECTRIC

ELECTRIC - CNP (QL-D)	E1(D)
ELECTRIC - TNMP (QL-B)	E2
ELECTRIC - TNMP (QL-D)	E2(D)
OH ELECTRIC - CNP	OE1
OH ELECTRIC - TNMP	OE2
OH HV ELECTRIC - CNP	OHV1
OH HV ELECTRIC - UNKNOWN	OHV2

GAS/PIPELINES

GAS - CNP (QL-B)	G1
GAS - CNP (QL-D)	G1(D)
PIPELINE - CHEVRON (QL-D)	PL1(D)
PIPELINE - ENTERPRISE (QL-D)	PL2(D)
PIPELINE - FLINT HILLS (QL-D)	PL3(D)
PIPELINE - INEOS USA (QL-D)	PL4(D)
PIPELINE - KINDER MORGAN (QL-D)	PL5(D)
PIPELINE - PHILLIPS 66 (QL-D)	PL6(D)
PIPELINE - MAGELLAN (QL-D)	PL7(D)
PIPELINE - DOW (QL-D)	PL8(D)
PIPELINE - MARATHON (QL-D)	PL9(D)
PIPELINE - EASTON ENERGY (QL-D)	PL10(D)
PIPELINE - EXXONMOBIL (QL-D)	PL12(D)
PIPELINE - BP PIPELINE (QL-D)	PL15(D)

ABANDONED PIPELINES

PIPELINE - NUSTAR (QL-D)	PL11
PIPELINE - PETROLEUM FUELS (QL-D)	PL13
PIPELINE - GALVESTON BAY (QL-D)	PL14

WATER

WATER - LEAGUE CITY (QL-D)	W1(D)
WATER - GCWA (QL-D)	W2(D)

WASTEWATER

WASTEWATER - LEAGUE CITY (QL-C)	WW1(C)
WASTEWATER - LEAGUE CITY (QL-D)	WW1(D)
FORCE MAIN - LEAGUE CITY (QL-D)	FM1(D)

STORM SEWER

STORM SEWER - TXDOT (QL-D)	STM1(D)
ASSUMED EDGE OF PIPE OVER 24"	

TRAFFIC

SIGNALS - TXDOT (QL-D)	TS1(D)

UTILITY APPURTENANCES

- LIGHT POLE
- POWER POLE
- WATER METER
- FIRE SUPPRESSION HOOKUP
- POST INDICATOR VALVE
- FIRE HYDRANT
- WATER VALVE
- WASTEWATER MANHOLE
- WASTEWATER CLEAN OUT
- STORM SEWER MANHOLE
- STORM SEWER GRATE INLET
- STORM SEWER CURB INLET
- TELECOM PEDESTAL
- TELECOM MANHOLE
- TELECOM CABINET
- TELECOM HANDHOLE
- FIBER OPTIC HANDHOLE
- CATV PEDESTAL
- GAS VALVE

MISCELLANEOUS

- TEST HOLE/DEPTH LOCATION

GENERAL NOTES

1. PURPOSE: TO INVESTIGATE, INTERPRET, AND DEPICT EXISTING UTILITIES AS PER THE SCOPE OF WORK NEGOTIATED BETWEEN LAMB-STAR ENGINEERING, LLC. AND THE CLIENT, WITHIN CLIENT SPECIFIC CORRIDORS.
2. THE UTILITIES DEPICTED ARE THE RESULTS OF THE UTILITY INVESTIGATION AS IDENTIFIED USING APPROPRIATE INDUSTRY STANDARD DETECTION METHODOLOGIES IN ACCORDANCE WITH THE AMERICAN SOCIETY OF CIVIL ENGINEERS (ASCE) STANDARD GUIDELINE FOR THE COLLECTION AND DEPICTION OF EXISTING SUBSURFACE UTILITY DATA. QUALITY LEVELS AND DEFINITIONS PER CI/ASCE STANDARD NO. 38-02.
3. QUALITY LEVEL "D" - QL-D - DEPICTED ACCORDING TO UTILITY RECORD INFORMATION AND IN-FIELD VISUAL INSPECTION. NO ELECTRONIC DESIGNATING INFORMATION WAS OBTAINED. UTILITIES WITH A QL-D LABEL ARE DEPICTED ON THE PLANS USING PROFESSIONAL JUDGMENT IN INTERPRETING THIRD-PARTY RECORDS OR OTHER INFORMATION.
4. QUALITY LEVEL "C" - QL-C - EXISTING UTILITY SURFACE FEATURES HAVE BEEN FIELD LOCATED AND SURVEYED TO ASSIST IN THE DEPICTING OF THE UTILITIES SHOWN ON THE RECORDS. NO ELECTRONIC DESIGNATING INFORMATION WAS OBTAINED. UTILITIES WITH A QL-C LABEL ARE DEPICTED BASED ON PROFESSIONAL JUDGMENT OF THE CORRELATION OF THE SURVEYED SURFACE FEATURES AND THE UTILITY RECORDS RECEIVED.
5. QUALITY LEVEL "B" - QL-B - INFORMATION WAS OBTAINED THROUGH THE APPLICATION OF APPROPRIATE SURFACE GEOPHYSICAL METHODS TO DETERMINE THE EXISTENCE AND APPROXIMATE HORIZONTAL POSITION OF THE SUBSURFACE UTILITIES. QL-B DATA SHOULD BE REPRODUCIBLE BY SURFACE GEOPHYSICS AT ANY POINT OF THEIR DEPICTION. UTILITIES WITH A QL-B LABEL ARE DEPICTED ON THE PLANS USING PROFESSIONAL JUDGMENT IN SELECTING AND INTERPRETING APPROPRIATE GEOPHYSICAL DATA, SURVEYING TO APPROPRIATE PROJECT ACCURACIES, AND USING PROFESSIONAL JUDGMENT TO CORRELATE THIRD-PARTY RECORDS OR OTHER INFORMATION, IF AVAILABLE, TO THESE QL-B DEPICTIONS.
6. QUALITY LEVEL "A" - QL-A - OBTAIN PRECISE HORIZONTAL AND VERTICAL POSITION OF THE UTILITY LINE BY EXCAVATING A TEST HOLE. THE TEST HOLE SHALL BE DONE USING VACUUM EXCAVATION OR COMPARABLE NON-DESTRUCTIVE EQUIPMENT IN A MANNER AS TO CAUSE NO DAMAGE TO UTILITY LINE. UNLESS OTHERWISE NOTED, ALL SIZES OF QL-A PIPES AND CONDUITS WILL BE PROVIDED AS OUTER DIAMETER (O.D.) RATHER THAN NOMINAL SIZE OR INSIDE DIAMETER.
7. RELIANCE UPON THIS DATA FOR RISK MANAGEMENT PURPOSES DURING BIDDING DOES NOT RELIEVE THE EXCAVATOR OR UTILITY OWNER FROM FOLLOWING ALL APPLICABLE UTILITY DAMAGE PREVENTION STATUTES, POLICIES, AND/OR PROCEDURES DURING EXCAVATION.
8. IT IS IMPORTANT THAT THE CONTRACTOR INVESTIGATES AND UNDERSTANDS THE SCOPE OF WORK BETWEEN THE PROJECT OWNER AND THEIR ENGINEER REGARDING THE SCOPE AND LIMITS OF THE UTILITY INVESTIGATIONS LEADING TO THESE UTILITY DEPICTIONS.
9. UTILITY BOTTOM SHOWN IS APPARENT BOTTOM. ACTUAL BOTTOM, ADDITIONAL MATERIAL AND/OR OTHER UTILITIES MAY EXIST BELOW APPARENT BOTTOM.
10. UTILITIES SHOWN OUTSIDE OF LIMITS OF INVESTIGATION ARE FOR REFERENCE ONLY. THESE UTILITIES ARE SHOWN FOR GENERAL INFORMATION USE DURING UTILITY COORDINATION, BUT THEY HAVE NOT BEEN VERIFIED AS BEING COMPLETE OR ACCURATE.
11. UTILITY SIZE AND TYPE ARE DETERMINED THROUGH AVAILABLE UTILITY OWNER INFORMATION OR FIELD OBSERVATIONS; UTILITIES LABELED AS UNKNOWN HAVE NO CORRELATED RECORDS OR VISIBLE APPURTENANCES TO DETERMINE FUNCTION OR TYPE.
12. UTILITIES MAY HAVE BEEN CHANGED OR ADDED AFTER 2/11/2022.
13. HORIZONTAL DATUM: SOUTH CENTRAL ZONE(NAD83, 2011 ADJUSTMENT, EPOCH 2010.00); U.S. SURVEY FEET; SURFACE ADJUSTMENT FACTOR OF 1.000130
14. VERTICAL DATUM: THE NORTH AMERICAN VERTICAL DATUM OF 1988 (NAVD88) USING GEO1D12B. ESTABLISHED BY DIGITAL LEVELS HOLDING VERTICAL MONUMENT NO9127302.
15. ALL UTILITY EASEMENTS SHOWN ARE APPROXIMATE & FOR REFERENCE ONLY. EASEMENT INFORMATION SHOWN IS BASED ON BOTH VERBAL & WRITTEN ACCOUNTS.
16. CONTACT AT&T 48 HOURS PRIOR TO MAKE NECESSARY ADJUSTMENTS TO THEIR FACILITIES IN THE BIKE PATHS.
17. QLC SURVEY WAS PROVIDED BY OTHERS.

UTILITY OWNER	UTILITY TYPE	UTILITY CONTACT			
		NAME	PHONE NUMBER	EMAIL	MAILING ADDRESS
AT&T	Communication	Brian Hill	832-491-7378	Brian.Hill.4@att.com	9051 Park West Dr. Houston, TX 77063
CHEVRON PL	Pipeline	Mario A. Martinez	713-890-6068	MartinezM@chevron.com	8600 Splander Road Baytown, TX 77521
CENTERPOINT	Gas	George Zamora United Engineers - Consultant	281-833-7729	georgez@unitedeng.com	9301 Southwest Frwy, Suite 500 Houston, TX 77074
CITY OF LEAGUE CITY	Municipal	Christopher Sims Jody Hooks Robert Taylor	281-554-1440 281-554-1321	christopher.sims@leaguecitytx.gov jody.hooks@leaguecitytx.gov robert.taylor@leaguecitytx.gov	300 W. Walker League City,Tx 77573
COMCAST	CATV	Dana Moreno	281-253-3902	Dana_moreno@comcast.com	7033 Airport Blvd Houston TX 77061
DOW/SEADRIFT PL	Pipeline	Jeff Cash	281-966-4581	Jcash@dow.com	1254 Enclave Pkwy Houston, Tx 77077
EASTON ENERGY	Pipeline	Robert Harden	830-719-0781	robert@refinedland.com	15375 Memorial Dr. Suite 850 Houston,TX 77079
ENTERPRISE PROD.	Pipeline	Junior Gomez	713-381-6878	hgomez@eprod.com	1100 Louisiana St. - Office 12.047 Houston, TX 77002
EXXON MOBIL PL	Pipeline	Jenny Robinson	713-819-6137	jenny.l.robinson@exxonmobil.com	1101 Pecan Ln Waco, TX 76705
FLINT HILLS	Pipeline	Mercedes Osbern	316-828-0276	Mercedes.Osbern@fhr.com	3931 Hwy 347 Port Arhur,Tx 77642
FRONTIER	Communication	Joshua May	979-402-7446	Joshua.i.may@FTR.com	Bryan Tx
GULF COAST WATER AUTHORITY	Water	Patrick Donart	409-795-0745	Pdonart@gcwater.org	3630 FM 1765, Texas City, Tx 77591
KINDER MORGAN	Pipeline	Ronald Frazier	713-369-9000	Ronald_Frazier@kindermorgan.com	1001 Louisiana St. Suite 100 Houston,TX 77002
INEOS USA INC	Pipeline	Tammie Cuyos	281-581-3748	tammie.cuyos@ineos.com	P.O. Box 1486 Alvin TX 77512
MAGELLAN	Pipeline	Bob Hiser	918-574-7341	robert.hiser@magellanlp.com	One Willams Center, OTC-8 Tulsa, OK 74172
MARATHON PETROLEUM	Pipeline	Brandon Ortiz	281-753-8838	bhortiz@Marathonpetroleum.com	P.O Box 1636, Seguin, TX 78156
MCI/VERIZON BUSINESS	Communication	Michael Mabe	832-917-7790	michael.mabe@verizon.com	14503 Luthe Rd. Houston, TX 77039
PETROLEUM FUELS	Pipeline	Tommy Jones	713-428-0610	tjones@pfcmidstream.com	1611 Corniche St League City, Tx 77573
PHILLIPS 66	Pipeline	Lamar Felder	(O) 832-765-4015 (M) 713-517-0516	Lamar.Felder@p66.com	2331 CityWest Blvd. Houston, TX 77042
PHONOSCOPE INC	Communication	Ruel Cabuncgal	832-760-6549	rcabungcal@phonoscope.com	10555 Westoffice Drive Houston, TX 77042
PURESPEED LIGHT WAVE	Communication	Orion Kester	281-881-3280	okester@pslightwave.com	5959 Corporate Dr. Suite 3300 Houston,Tx 77036
TEXAS NEW MEXICO	Electric	Hector Galarza	409-949-5683	Hector .Galarza@tnmp.com	702 Highway 146 North Texas City, Tx 77590

NO.	DATE	REVISION	APPROVED

STATE OF TEXAS
DAKOTA W. SMITH
133272
LICENSED
PROFESSIONAL ENGINEER
7/26/2023

LAMB-STAR ENGINEERING, LLC
TEXAS REGISTERED ENGINEERING FIRM F-9073

Texas Department of Transportation
©2023

LAMB-STAR ENGINEERING, LLC
3801 PARKWOOD BLVD, SUITE 550
FRISCO, TEXAS 75034 (214) 440-3600
TEXAS REGISTERED ENGINEERING FIRM F-9073

EXISTING UTILITY LAYOUT

LEGEND & GENERAL NOTES

SHEET 1 OF 1

DRAWN	FED.RD. DIV.NO.	FEDERAL AID PROJECT NO.		HIGHWAY NO.
LSE	06			FM 270 ETC
DESIGNED	STATE	DIST.	COUNTY	SHEET NO.
LSE		HOUSTON	GALVESTON	
CHECKED	CONT.	SECT.	JOB	249
LSE	0912	73	215	
APPROVED				
LSE				

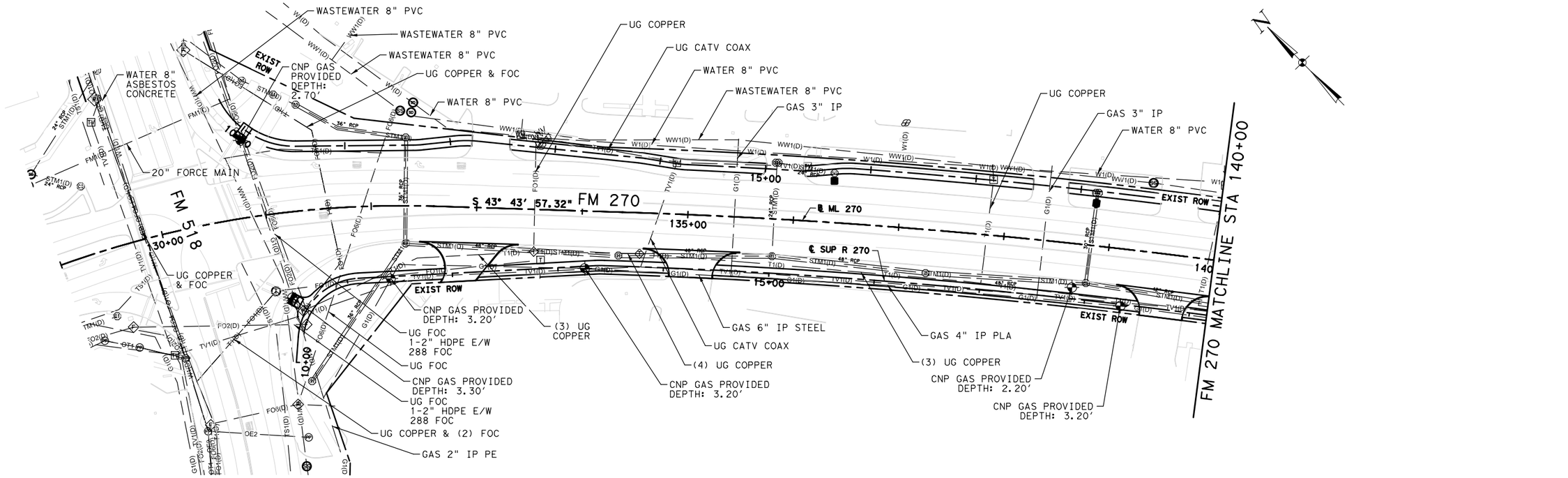

NO.	DATE	REVISION	APPROVED

STATE OF TEXAS
DAKOTA W. SMITH
133272
LICENSED
PROFESSIONAL ENGINEER
9/6/2023

LAMB-STAR ENGINEERING, LLC
TEXAS REGISTERED ENGINEERING FIRM F-9073

Texas Department of Transportation
©2023

LAMB-STAR ENGINEERING, LLC
3801 PARKWOOD BLVD, SUITE 550
FRISCO, TEXAS 75034 (214) 440-3600
TEXAS REGISTERED ENGINEERING FIRM F-9073

EXISTING UTILITY LAYOUT

BEGIN TO STA 150+00

SHEET 1 OF 16

DRAWN	FED. RD. DIV. NO.	FEDERAL AID PROJECT NO.		HIGHWAY NO.
LSE	06			FM 270 ETC
DESIGNED	STATE	DIST.	COUNTY	SHEET NO.
LSE		HOUSTON	GALVESTON	250
CHECKED	CONT.	SECT.	JOB	
LSE	0912	73	215	
APPROVED				
LSE				

DATE:7/26/2023 11:15:00 AM USER:Beth. Bowden
FILE:c:\bms\pwe101-01\beth bowden\dms22655\LCBF_UTIL01.dgn
PLOTDRIVER: LCBF - UTIL Color.pltcfg PENTABLE:LCBF.tbl

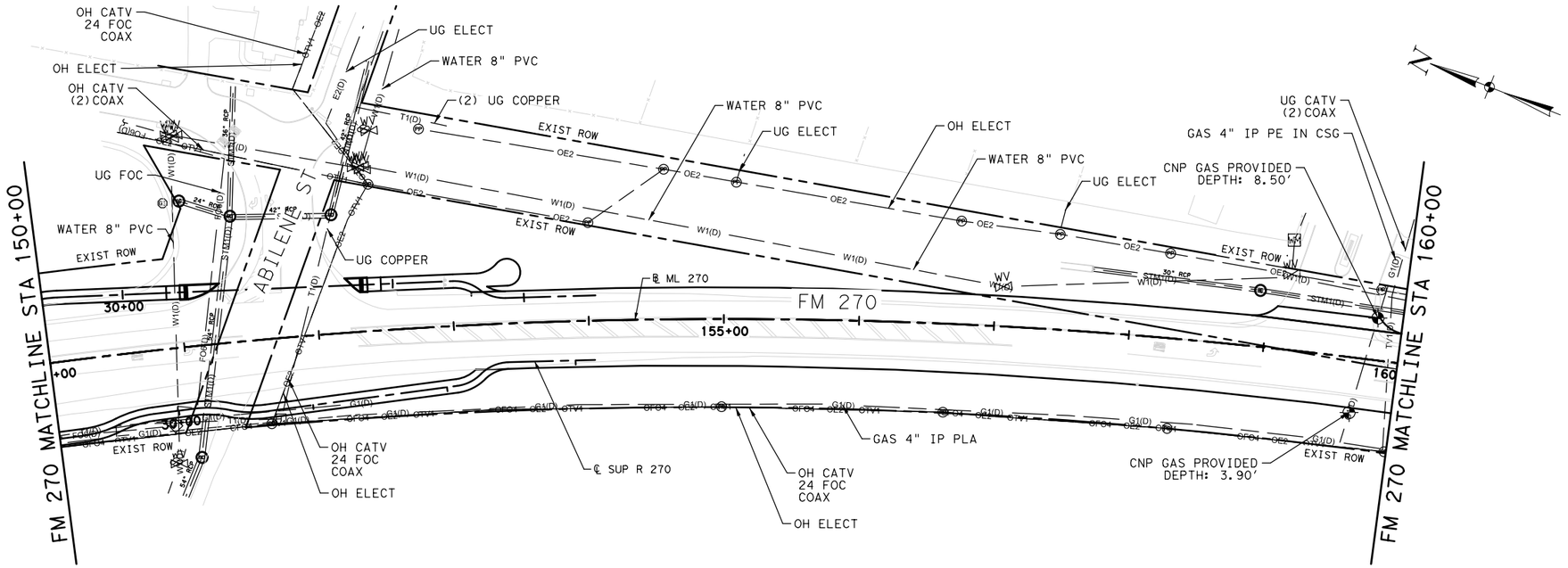

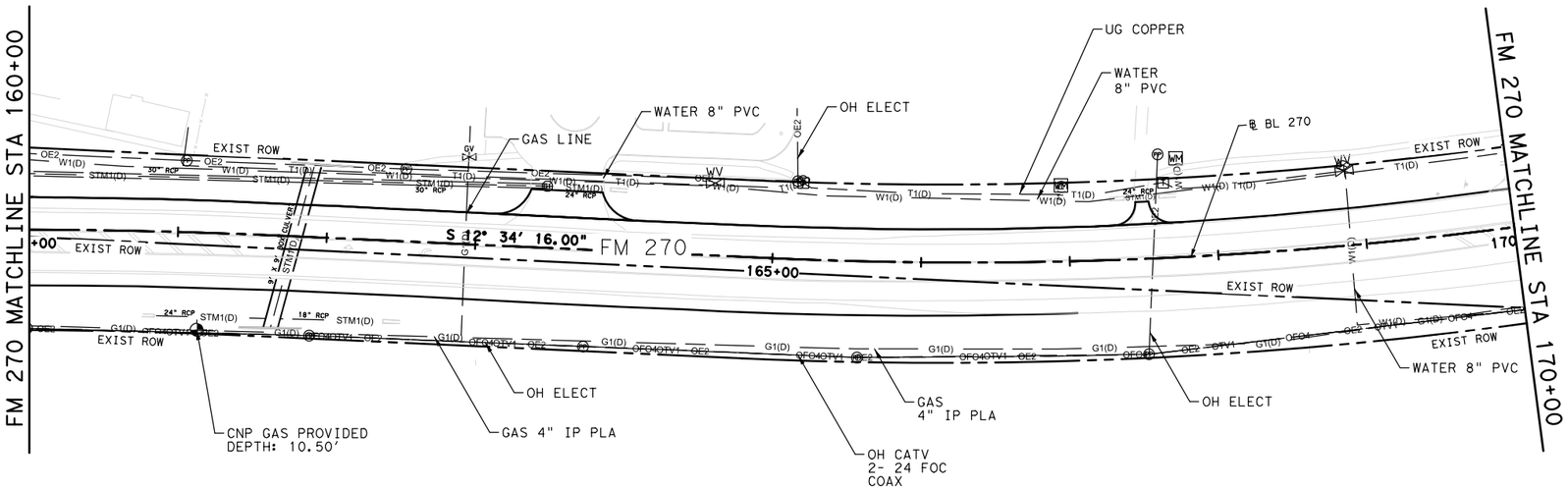

NO.	DATE	REVISION	APPROVED

STATE OF TEXAS
DAKOTA W. SMITH
133272
LICENSED
PROFESSIONAL ENGINEER
7/26/2023

LAMB-STAR ENGINEERING, LLC
TEXAS REGISTERED ENGINEERING FIRM F-9073

Texas Department of Transportation
©2023

LAMB-STAR ENGINEERING, LLC
3801 PARKWOOD BLVD, SUITE 550
FRISCO, TEXAS 75034 (214) 440-3600
TEXAS REGISTERED ENGINEERING FIRM F-9073

EXISTING UTILITY LAYOUT

STA 150+00 TO STA 170+00

SHEET 2 OF 16

DRAWN	FED. RD. DIV. NO.	FEDERAL AID PROJECT NO.		HIGHWAY NO.
LSE	06			FM 270 ETC
DESIGNED	STATE	DIST.	COUNTY	SHEET NO.
LSE		HOUSTON	GALVESTON	
CHECKED	CONT.	SECT.	JOB	251
LSE	0912	73	215	
APPROVED				
LSE				

PLOTDRIVER: LCBF - UTIL Color.pltcfg PENTABLE:LCBF.tbl
DATE:7/26/2023 11:15:01 AM USER:Beth. Bowden
FILE:c:\bms\pwe101-01\beth bowden\dms22655\LCBF_UTIL02.dgn

PLOTDRIVER: LCBF - UTIL Color.pltcfg PENTABLE: LCBF.tbl
DATE: 7/26/2023 11:15:02 AM USER: Beth. Bowden
FILE: c:\bms\pwe101-01\beth bowden\dms22655\LCBF_UTIL03.dgn

0′ 25′ 50′ 100′

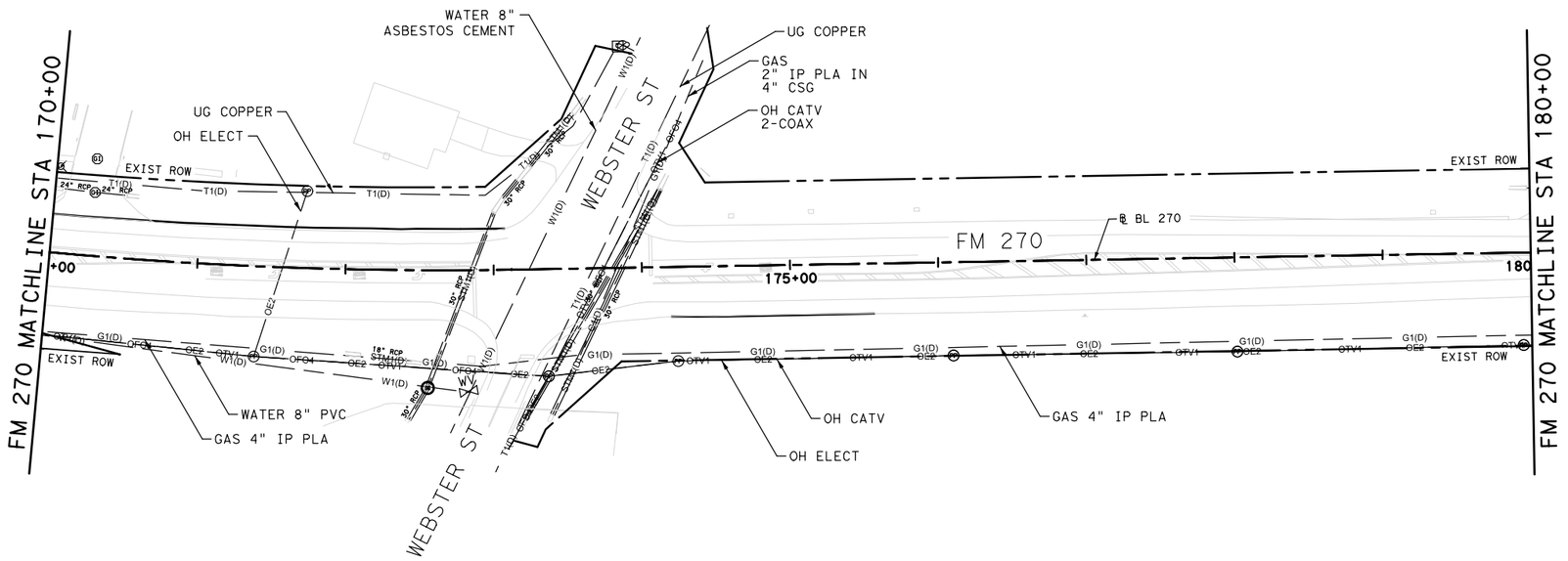

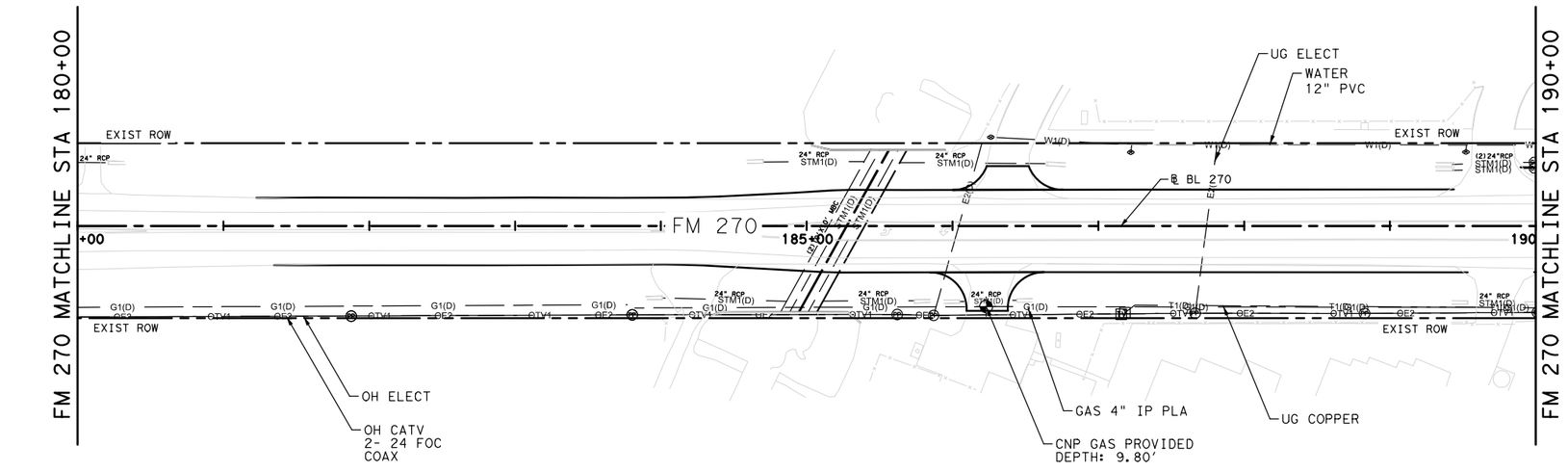

NO.	DATE	REVISION	APPROVED

STATE OF TEXAS
DAKOTA W. SMITH
133272
LICENSED
PROFESSIONAL ENGINEER
7/26/2023

LAMB-STAR ENGINEERING, LLC
TEXAS REGISTERED ENGINEERING FIRM F-9073

Texas Department of Transportation
©2023

LAMB-STAR ENGINEERING, LLC
3801 PARKWOOD BLVD, SUITE 550
FRISCO, TEXAS 75034 (214) 440-3600
TEXAS REGISTERED ENGINEERING FIRM F-9073

EXISTING UTILITY LAYOUT

STA 170+00 TO STA 190+00

SHEET 3 OF 16

DRAWN	FED.RD. DIV.NO.	FEDERAL AID PROJECT NO.		HIGHWAY NO.
LSE	06			FM 270 ETC
DESIGNED	STATE	DIST.	COUNTY	SHEET NO.
LSE		HOUSTON	GALVESTON	
CHECKED	CONT.	SECT.	JOB	252
LSE	0912	73	215	
APPROVED				
LSE				

PLOTDRIVER: LCBF - UTIL Color.pltcfg PENTABLE: LCBF.tbl
DATE: 7/26/2023 11:15:03 AM USER: Beth. Bowden
FILE: c:\bms\pwe101-01\beth bowden\dms22655\LCBF_UTIL04.dgn

0′ 25′ 50′ 100′

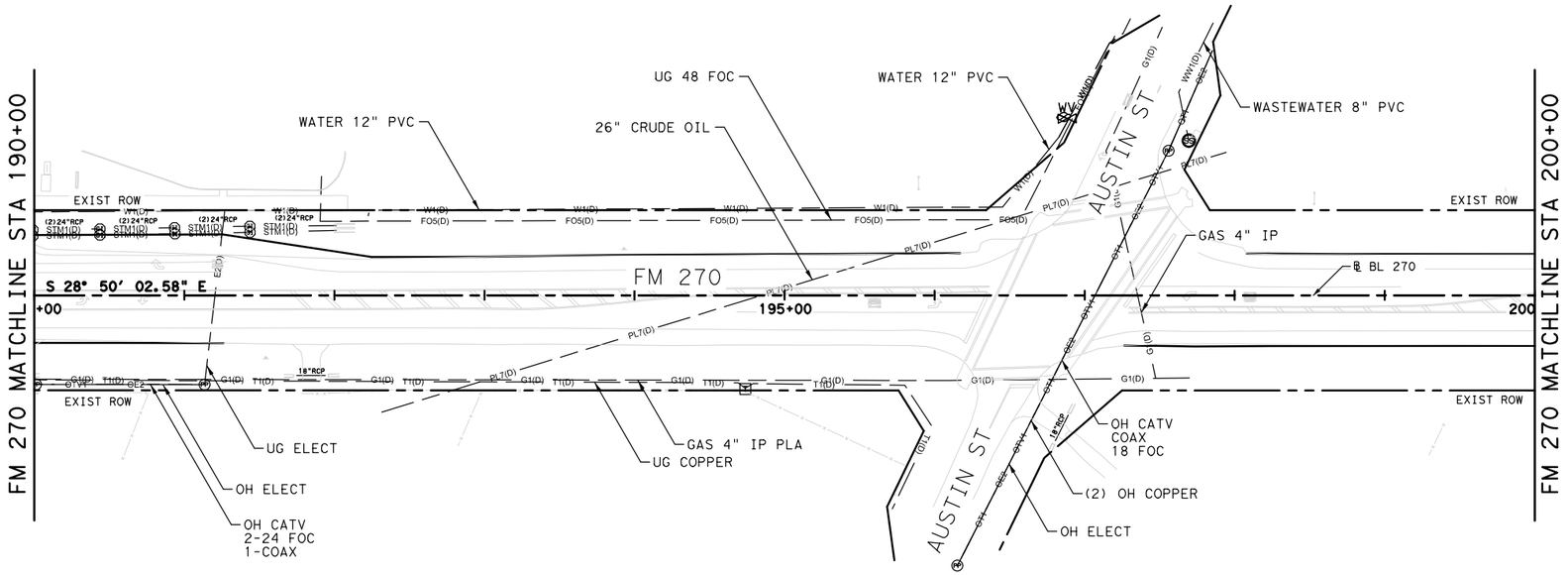

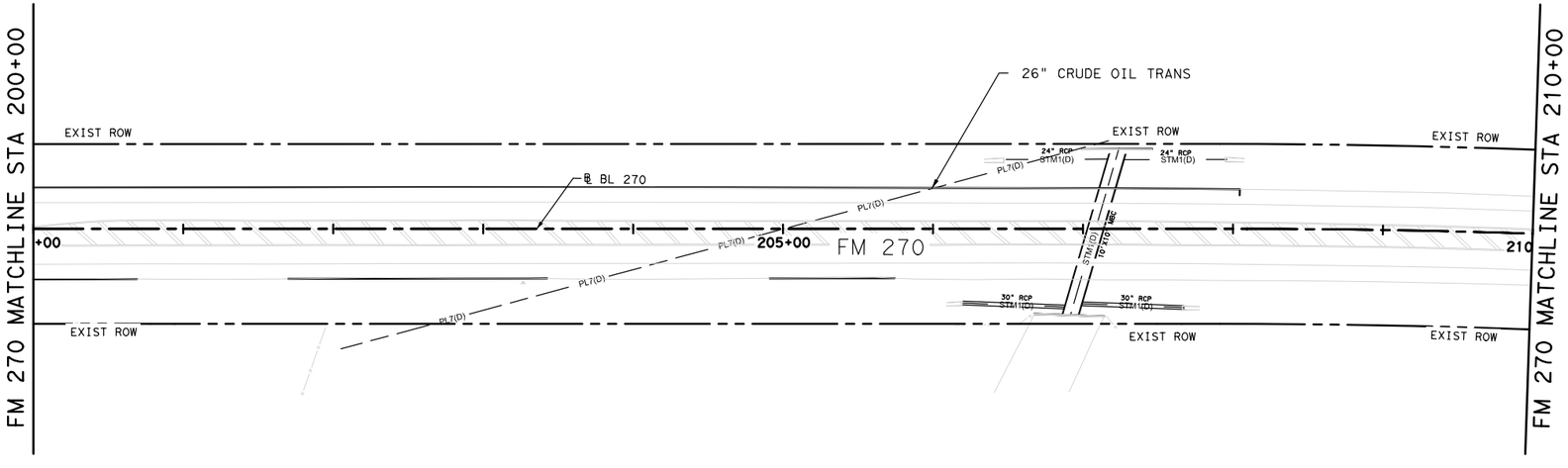

NO.	DATE	REVISION	APPROVED

STATE OF TEXAS
DAKOTA W. SMITH
133272
LICENSED
PROFESSIONAL ENGINEER
7/26/2023

LAMB-STAR ENGINEERING, LLC
TEXAS REGISTERED ENGINEERING FIRM F-9073

Texas Department of Transportation
©2023

LAMB-STAR ENGINEERING, LLC
3801 PARKWOOD BLVD, SUITE 550
FRISCO, TEXAS 75034 (214) 440-3600
TEXAS REGISTERED ENGINEERING FIRM F-9073

EXISTING UTILITY LAYOUT

STA 190+00 TO STA 210+00

SHEET 4 OF 16

DRAWN	FED. RD. DIV. NO.	FEDERAL AID PROJECT NO.		HIGHWAY NO.
LSE	06			FM 270 ETC
DESIGNED	STATE	DIST.	COUNTY	SHEET NO.
LSE		HOUSTON	GALVESTON	
CHECKED	CONT.	SECT.	JOB	253
LSE	0912	73	215	
APPROVED				
LSE				

PLOTDRIVER: LCBF - UTIL Color.pltcfg PENTABLE: LCBF.tbl
DATE: 7/26/2023 11:15:05 AM USER: Beth. Bowden
FILE: c:\dms\pwe101-01\beth bowden\dms22655\LCBF_UTIL05.dgn

0' 25' 50' 100'

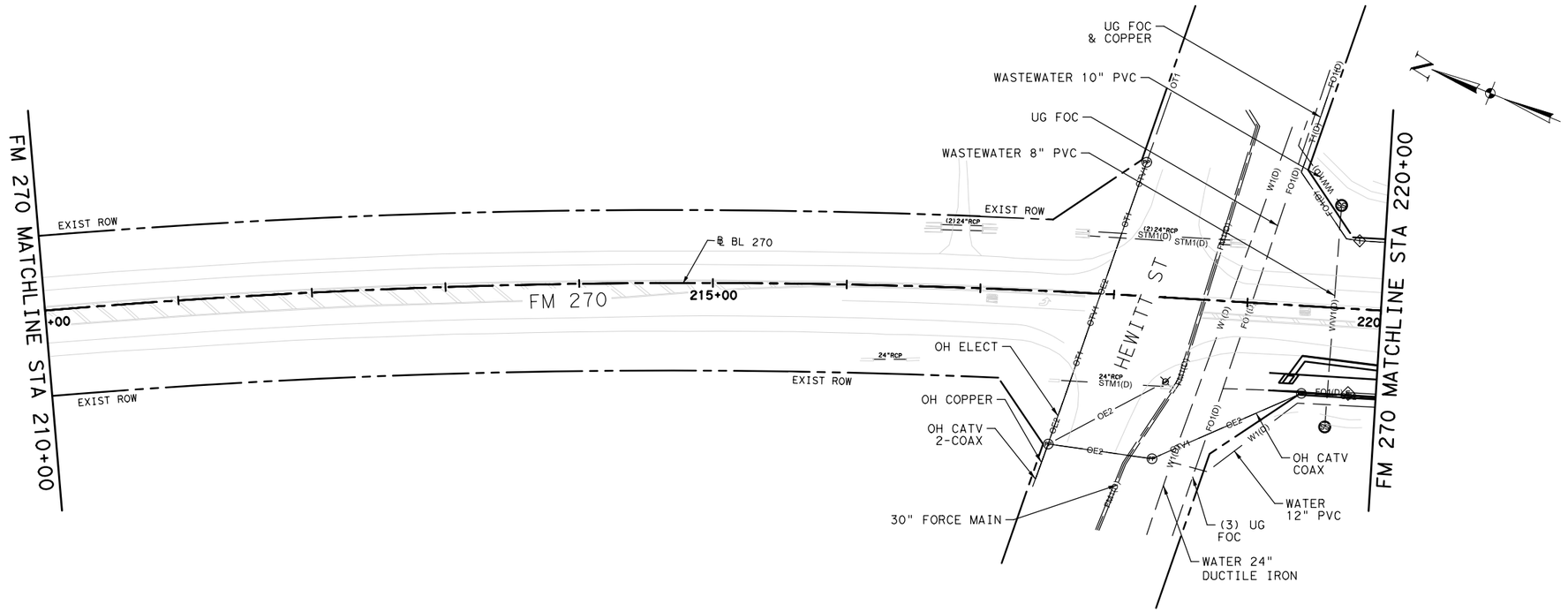

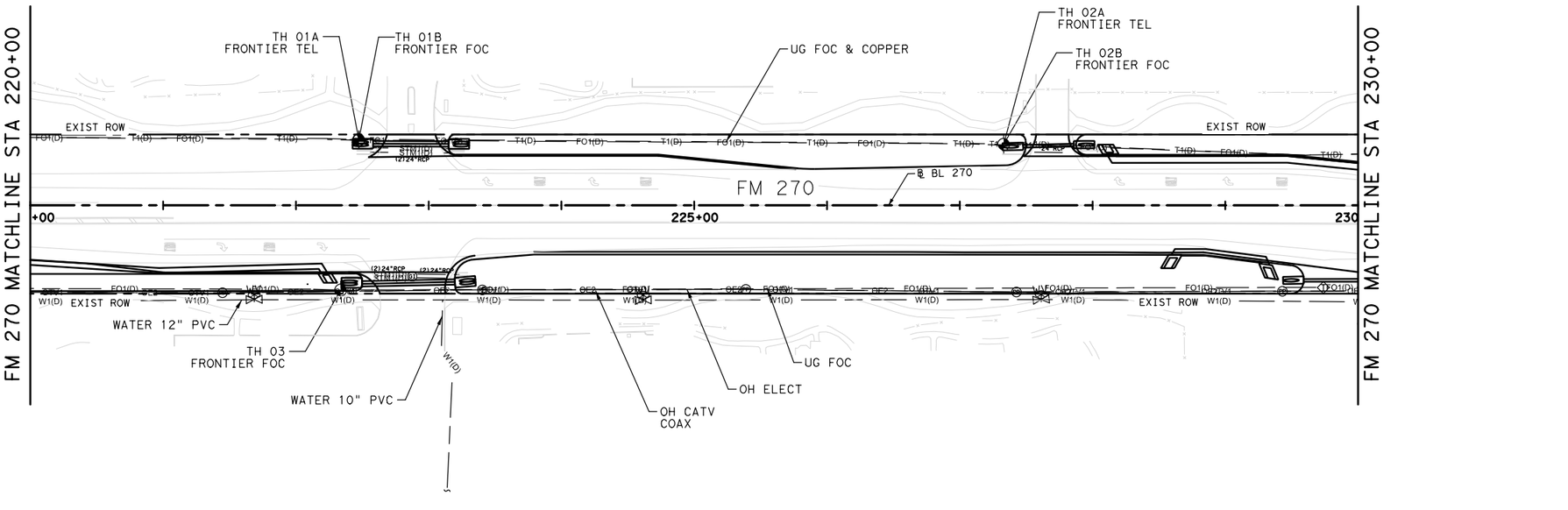

NO.	DATE	REVISION	APPROVED

STATE OF TEXAS
DAKOTA W. SMITH
133272
LICENSED
PROFESSIONAL ENGINEER
7/26/2023

LAMB-STAR ENGINEERING, LLC
TEXAS REGISTERED ENGINEERING FIRM F-9073

Texas Department of Transportation
©2023

LAMB-STAR ENGINEERING, LLC
3801 PARKWOOD BLVD, SUITE 550
FRISCO, TEXAS 75034 (214) 440-3600
TEXAS REGISTERED ENGINEERING FIRM F-9073

EXISTING UTILITY LAYOUT

STA 210+00 TO STA 230+00

SHEET 5 OF 16

DRAWN	FED. RD. DIV. NO.	FEDERAL AID PROJECT NO.		HIGHWAY NO.
LSE	06			FM 270 ETC
DESIGNED	STATE	DIST.	COUNTY	SHEET NO.
LSE		HOUSTON	GALVESTON	
CHECKED	CONT.	SECT.	JOB	254
LSE	0912	73	215	
APPROVED				
LSE				

PLOTDRIVER: LCBF - UTIL Color.pltcfg PENTABLE: LCBF.tbl
DATE: 7/26/2023 11:15:06 AM USER: Beth. Bowden
FILE: c:\bms\pwe101-01\beth bowden\dms22655\LCBF_UTIL06.dgn

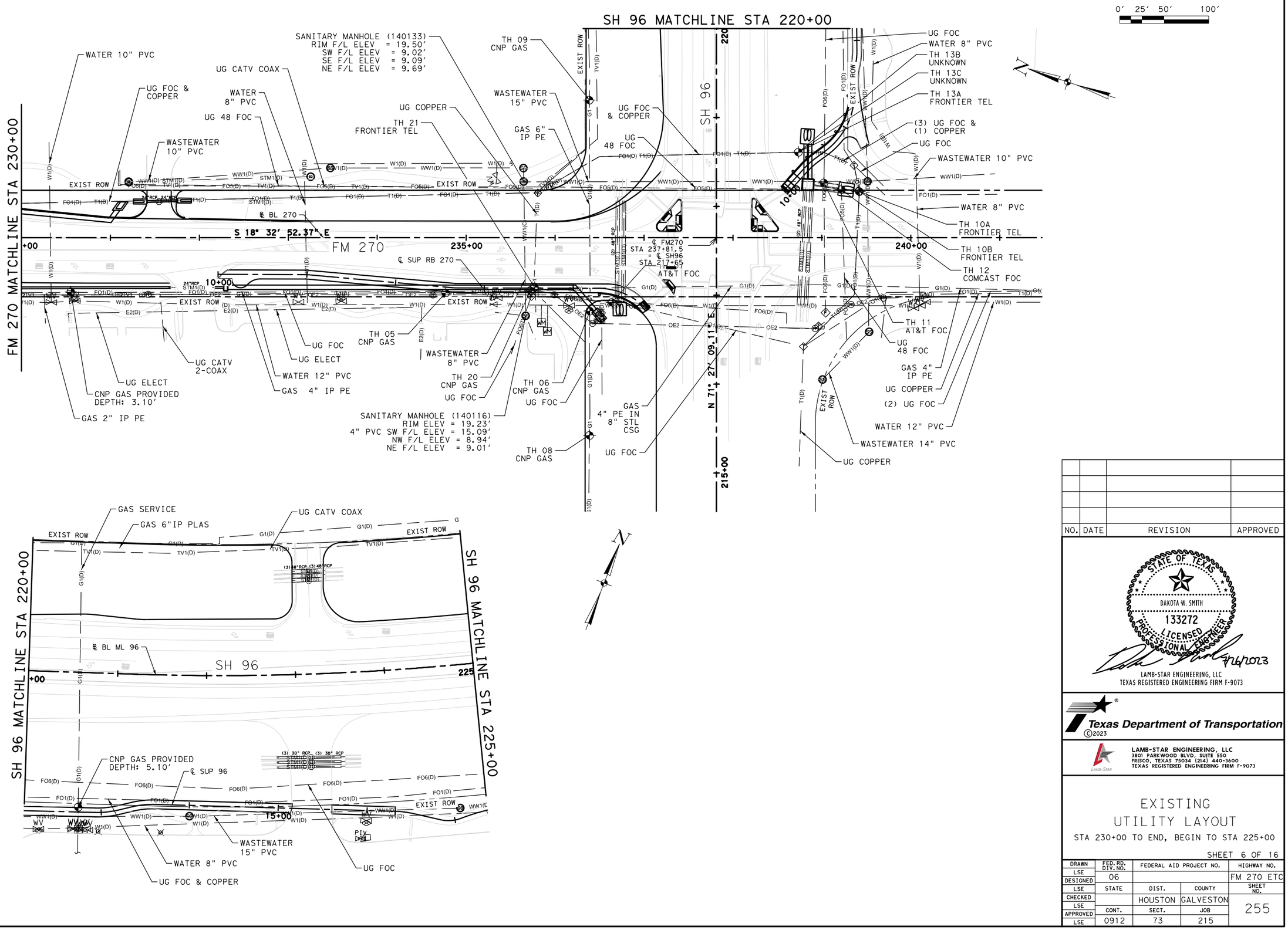

NO.	DATE	REVISION	APPROVED

STATE OF TEXAS
DAKOTA W. SMITH
133272
LICENSED PROFESSIONAL ENGINEER
4/6/2023

LAMB-STAR ENGINEERING, LLC
TEXAS REGISTERED ENGINEERING FIRM F-9073

Texas Department of Transportation
©2023

LAMB-STAR ENGINEERING, LLC
3801 PARKWOOD BLVD, SUITE 550
FRISCO, TEXAS 75034 (214) 440-3600
TEXAS REGISTERED ENGINEERING FIRM F-9073

EXISTING UTILITY LAYOUT

STA 230+00 TO END, BEGIN TO STA 225+00

SHEET 6 OF 16

DRAWN	FED. RD. DIV. NO.	FEDERAL AID PROJECT NO.		HIGHWAY NO.
LSE	06			FM 270 ETC
DESIGNED	STATE	DIST.	COUNTY	SHEET NO.
LSE		HOUSTON	GALVESTON	255
CHECKED	CONT.	SECT.	JOB	
LSE	0912	73	215	
APPROVED				
LSE				

PLOTDRIVER: LCBF - UTIL Color.pltcfg PENTABLE: LCBF.tbl
DATE: 7/26/2023 11:15:07 AM USER: Beth. Bowden
FILE: c:\bms\pwe101-01\beth bowden\dms22655\LCBF_UTIL07.dgn

0′ 25′ 50′ 100′

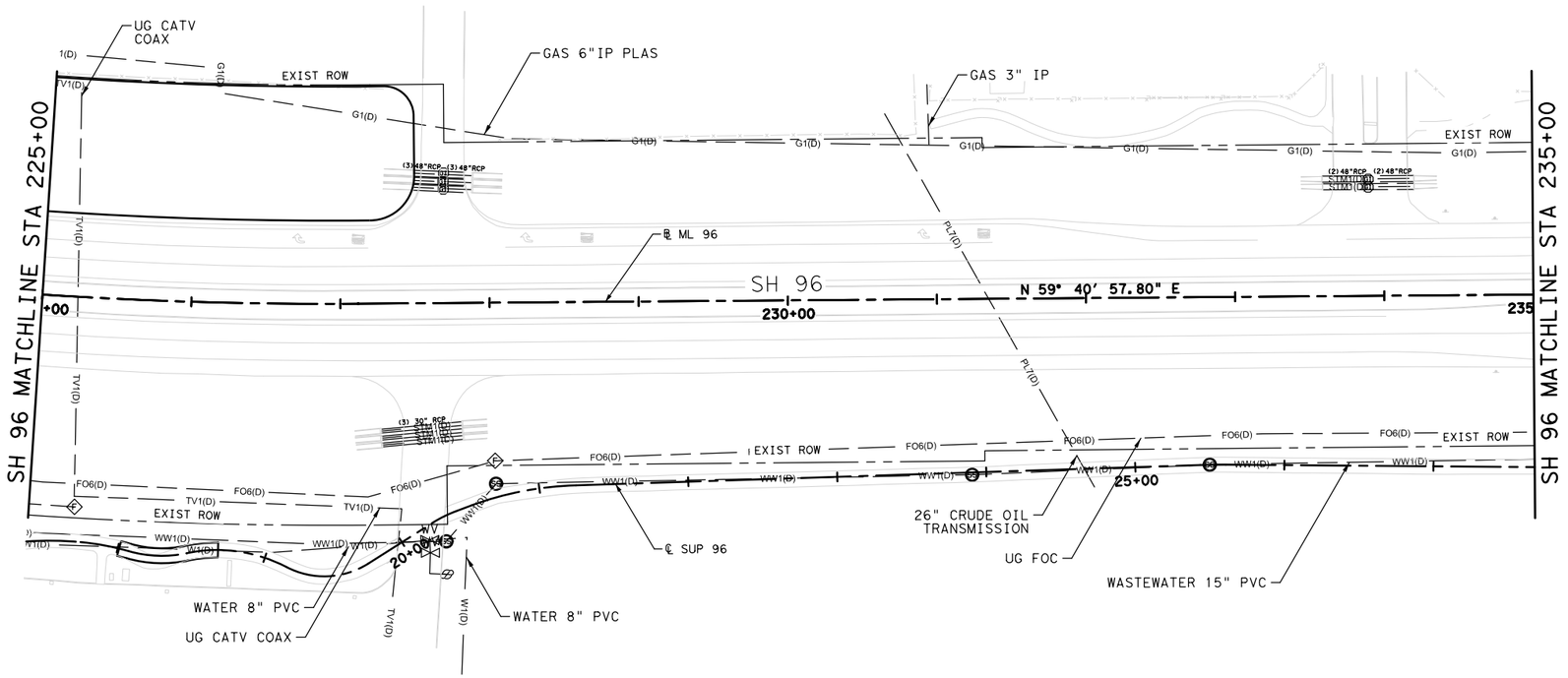

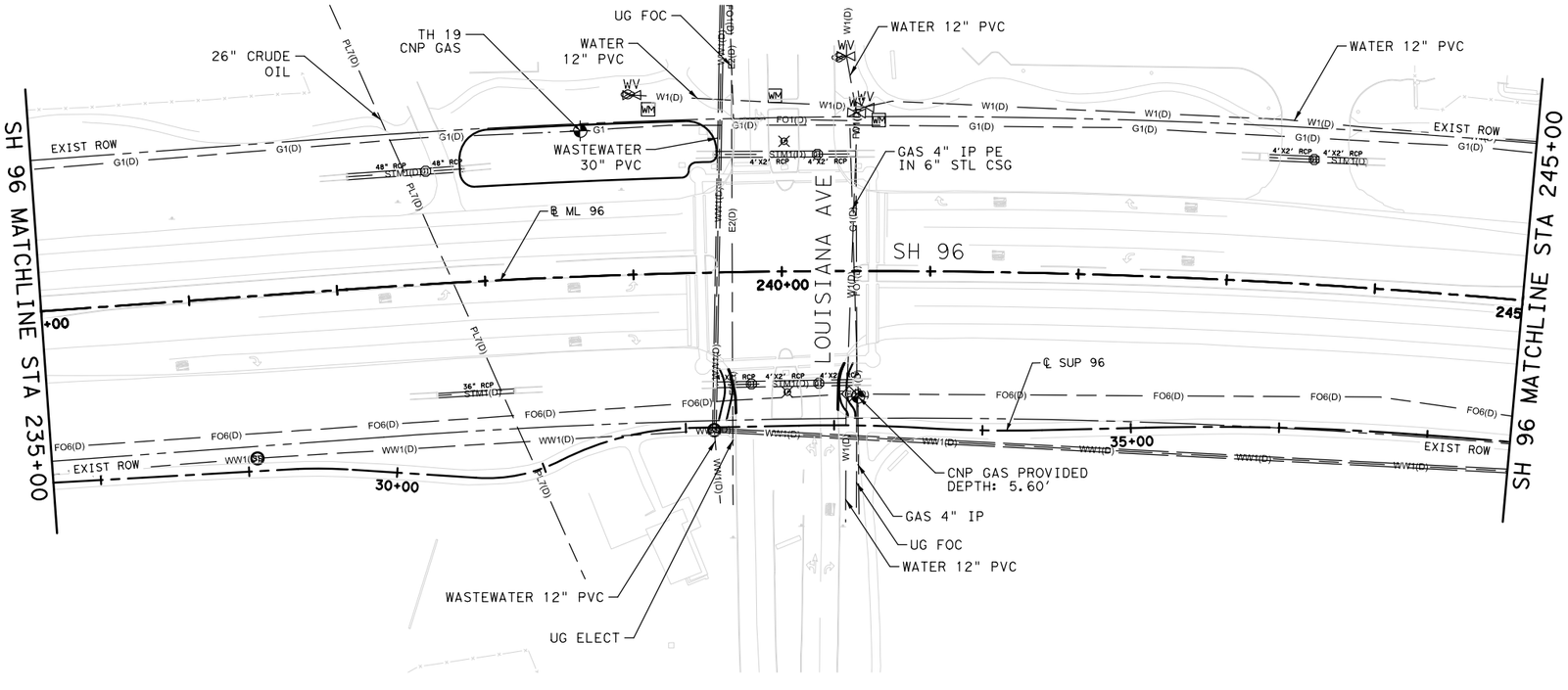

NO.	DATE	REVISION	APPROVED

STATE OF TEXAS
DAKOTA W. SMITH
133272
LICENSED PROFESSIONAL ENGINEER
7/26/2023

LAMB-STAR ENGINEERING, LLC
TEXAS REGISTERED ENGINEERING FIRM F-9073

Texas Department of Transportation
©2023

LAMB-STAR ENGINEERING, LLC
3801 PARKWOOD BLVD, SUITE 550
FRISCO, TEXAS 75034 (214) 440-3600
TEXAS REGISTERED ENGINEERING FIRM F-9073

EXISTING UTILITY LAYOUT

STA 225+00 TO STA 245+00

SHEET 7 OF 16

DRAWN	FED. RD. DIV. NO.	FEDERAL AID PROJECT NO.		HIGHWAY NO.
LSE	06			FM 270 ETC
DESIGNED	STATE	DIST.	COUNTY	SHEET NO.
LSE		HOUSTON	GALVESTON	
CHECKED	CONT.	SECT.	JOB	256
LSE	0912	73	215	
APPROVED				
LSE				

PLOTDRIVER: LCBF - UTIL Color.pltcfg PENTABLE: LCBF.tbl
DATE: 7/26/2023 11:15:08 AM USER: Beth. Bowden
FILE: c:\bms\pwe101-01\beth bowden\dms22655\LCBF_UTIL08.dgn

0′ 25′ 50′ 100′

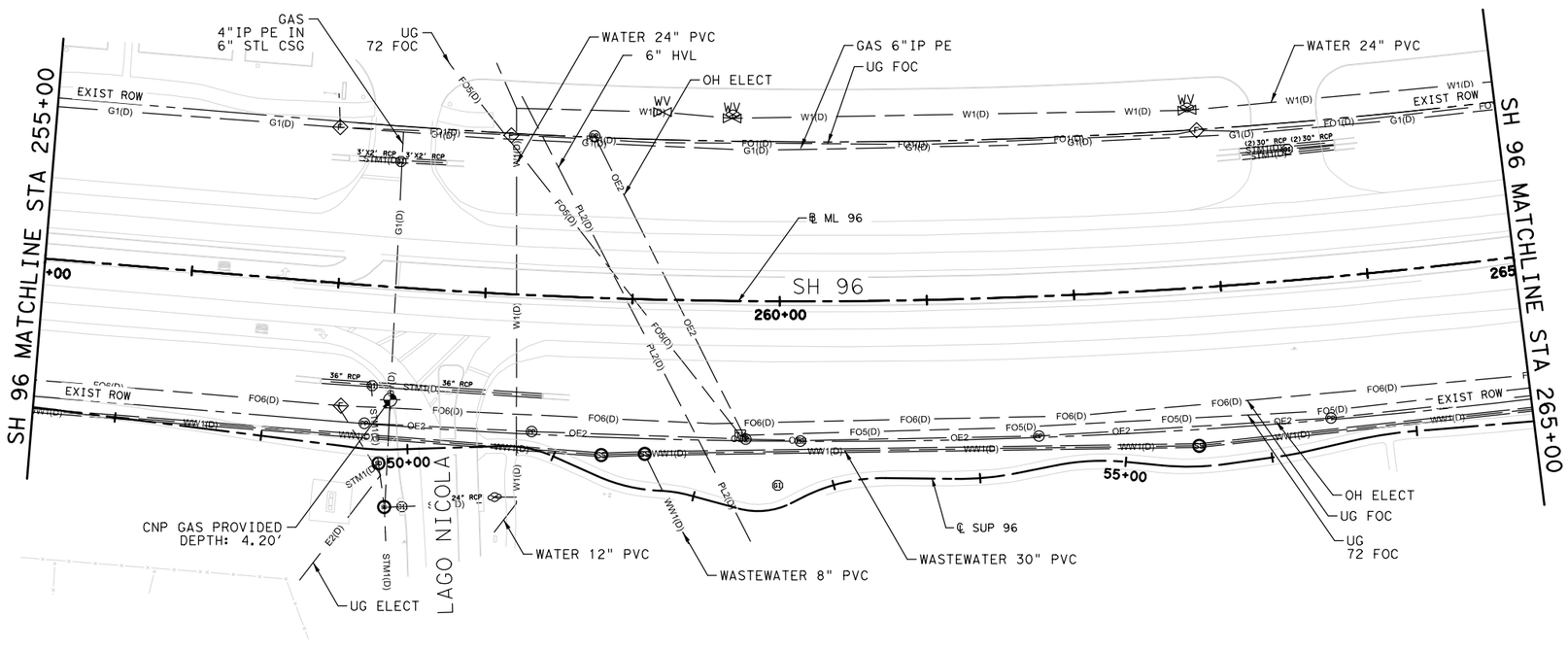

NO.	DATE	REVISION	APPROVED

STATE OF TEXAS
DAKOTA W. SMITH
133272
LICENSED
PROFESSIONAL ENGINEER
7/26/2023

LAMB-STAR ENGINEERING, LLC
TEXAS REGISTERED ENGINEERING FIRM F-9073

Texas Department of Transportation
©2023

LAMB-STAR ENGINEERING, LLC
3801 PARKWOOD BLVD, SUITE 550
FRISCO, TEXAS 75034 (214) 440-3600
TEXAS REGISTERED ENGINEERING FIRM F-9073

EXISTING UTILITY LAYOUT

STA 245+00 TO STA 265+00

SHEET 8 OF 16

DRAWN	FED. RD. DIV. NO.	FEDERAL AID PROJECT NO.		HIGHWAY NO.
LSE	06			FM 270 ETC
DESIGNED	STATE	DIST.	COUNTY	SHEET NO.
LSE		HOUSTON	GALVESTON	
CHECKED	CONT.	SECT.	JOB	257
LSE	0912	73	215	
APPROVED				
LSE				

PLOTDRIVER: LCBF - UTIL Color.pltcfg PENTABLE: LCBF.tbl
DATE: 7/26/2023 11:15:09 AM USER: Beth. Bowden
FILE: c:\bms\pwe101-01\beth bowden\dms22655\LCBF_UTIL09.dgn

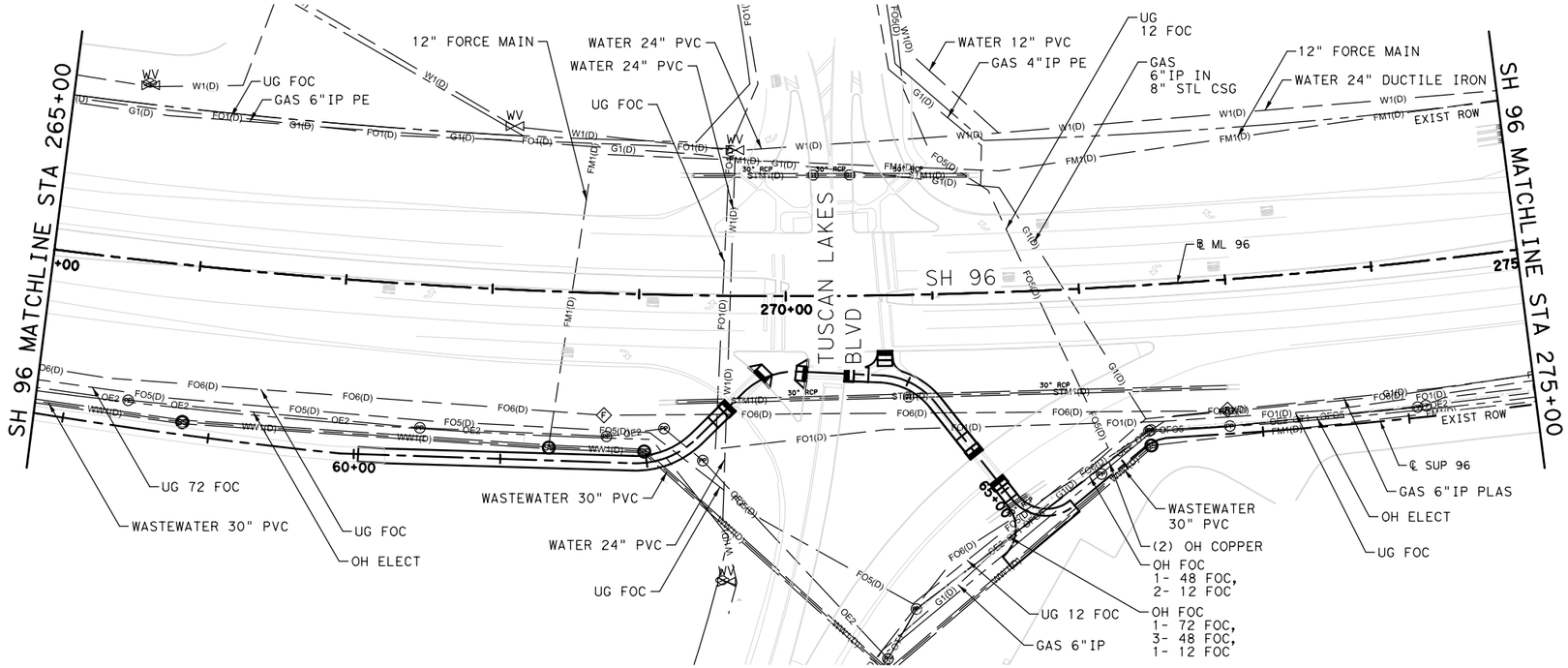

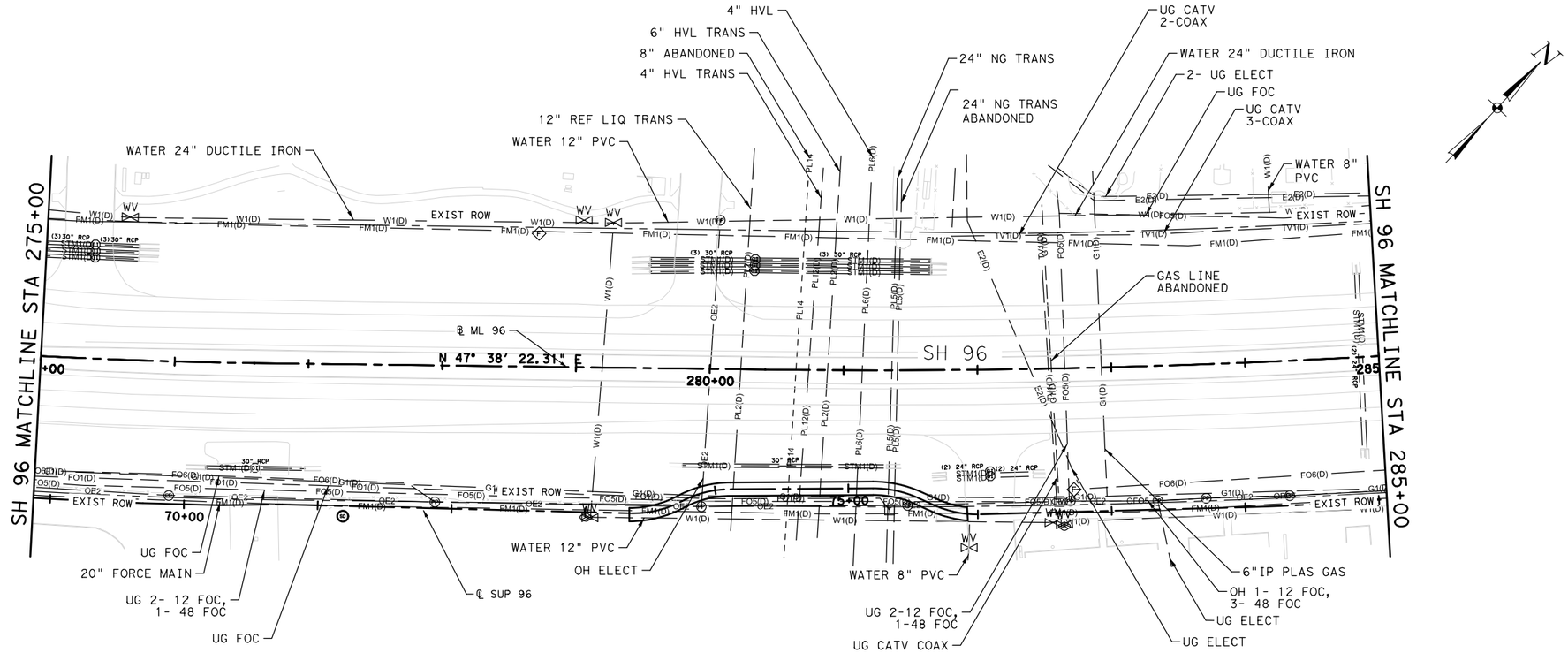

NO.	DATE	REVISION	APPROVED

STATE OF TEXAS
DAKOTA W. SMITH
133272
LICENSED
PROFESSIONAL ENGINEER
7/26/2023

LAMB-STAR ENGINEERING, LLC
TEXAS REGISTERED ENGINEERING FIRM F-9073

Texas Department of Transportation
©2023

LAMB-STAR ENGINEERING, LLC
3801 PARKWOOD BLVD, SUITE 550
FRISCO, TEXAS 75034 (214) 440-3600
TEXAS REGISTERED ENGINEERING FIRM F-9073

EXISTING UTILITY LAYOUT

STA 265+00 TO STA 285+00

SHEET 9 OF 16

DRAWN	FED. RD. DIV. NO.	FEDERAL AID PROJECT NO.		HIGHWAY NO.
LSE	06			FM 270 ETC
DESIGNED	STATE	DIST.	COUNTY	SHEET NO.
LSE		HOUSTON	GALVESTON	
CHECKED	CONT.	SECT.	JOB	258
LSE	0912	73	215	
APPROVED				
LSE				

PLOTDRIVER: LCBF - UTIL Color.pltcfg PENTABLE: LCBF.tbl
DATE: 7/26/2023 11:15:11 AM USER: Beth. Bowden
FILE: c:\dms\pwe101-01\beth bowden\dms22655\LCBF_UTIL10.dgn

0' 25' 50' 100'

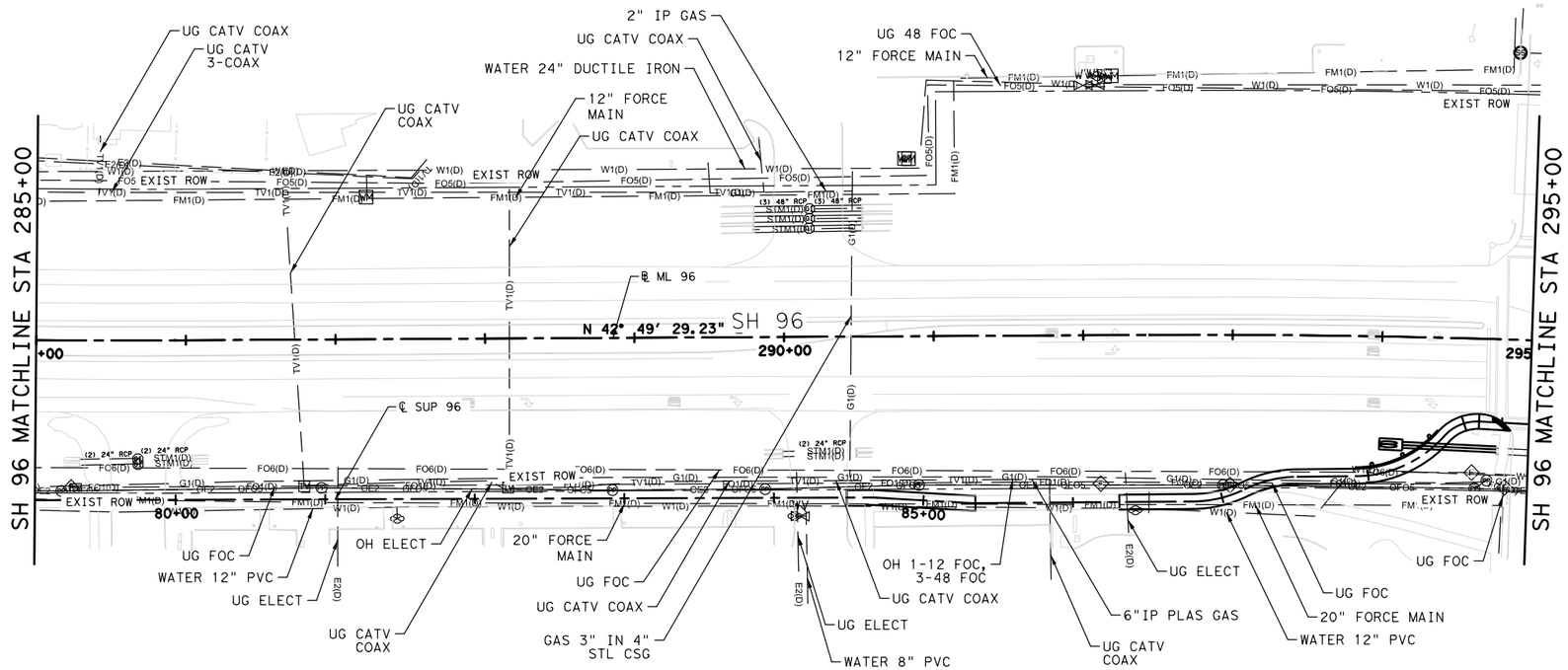

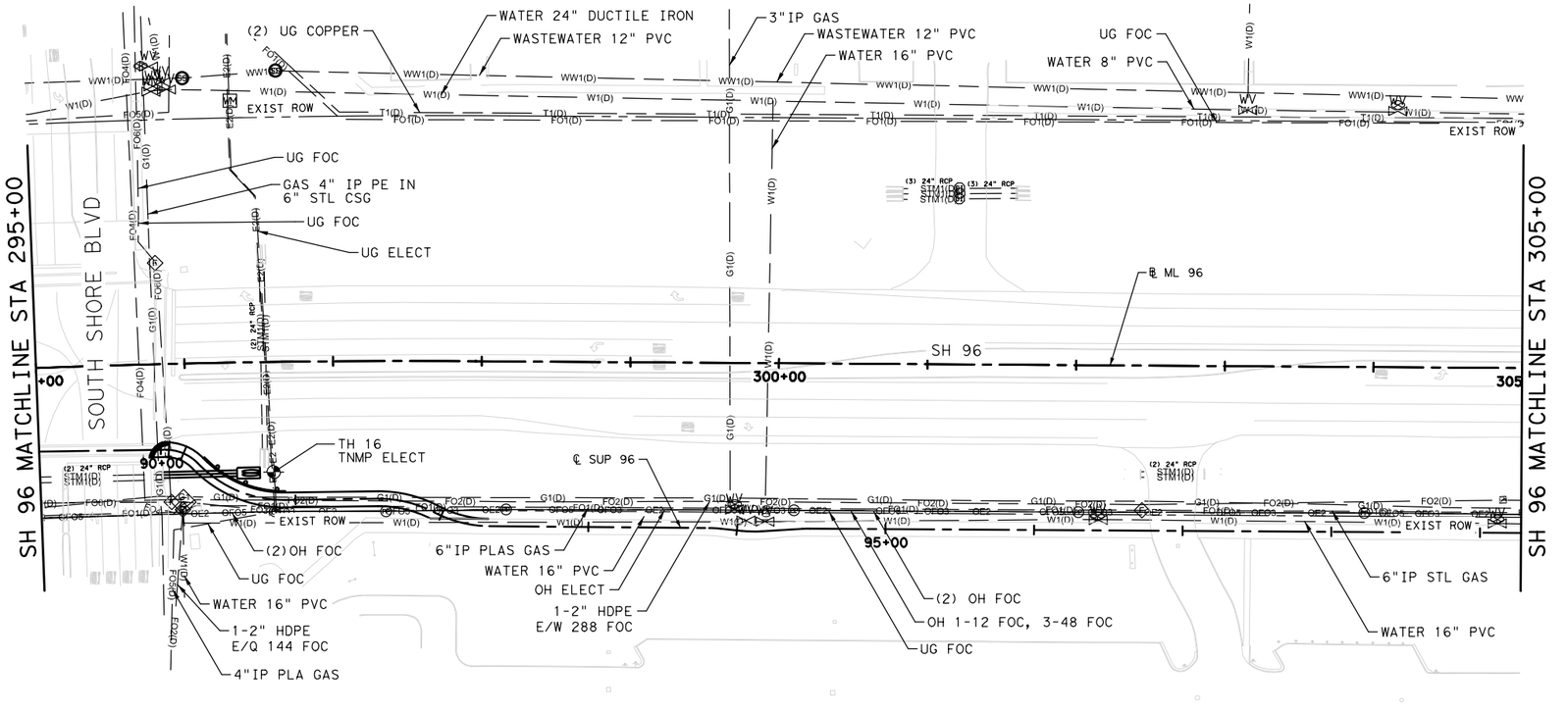

NO.	DATE	REVISION	APPROVED

STATE OF TEXAS
DAKOTA W. SMITH
133272
LICENSED
PROFESSIONAL ENGINEER
7/26/2023

LAMB-STAR ENGINEERING, LLC
TEXAS REGISTERED ENGINEERING FIRM F-9073

Texas Department of Transportation
©2023

LAMB-STAR ENGINEERING, LLC
3801 PARKWOOD BLVD, SUITE 550
FRISCO, TEXAS 75034 (214) 440-3600
TEXAS REGISTERED ENGINEERING FIRM F-9073

EXISTING UTILITY LAYOUT

STA 285+00 TO STA 305+00

SHEET 10 OF 16

DRAWN	FED. RD. DIV. NO.	FEDERAL AID PROJECT NO.		HIGHWAY NO.
LSE	06			FM 270 ETC
DESIGNED	STATE	DIST.	COUNTY	SHEET NO.
LSE		HOUSTON	GALVESTON	259
CHECKED	CONT.	SECT.	JOB	
LSE	0912	73	215	
APPROVED				
LSE				

PLOTDRIVER: LCBF - UTIL Color.pltcfg PENTABLE: LCBF.tbl
DATE: 7/26/2023 11:15:12 AM USER: Beth. Bowden
FILE: c:\bms\pwe101-01\beth bowden\dms22655\LCBF_UTIL11.dgn

0′ 25′ 50′ 100′

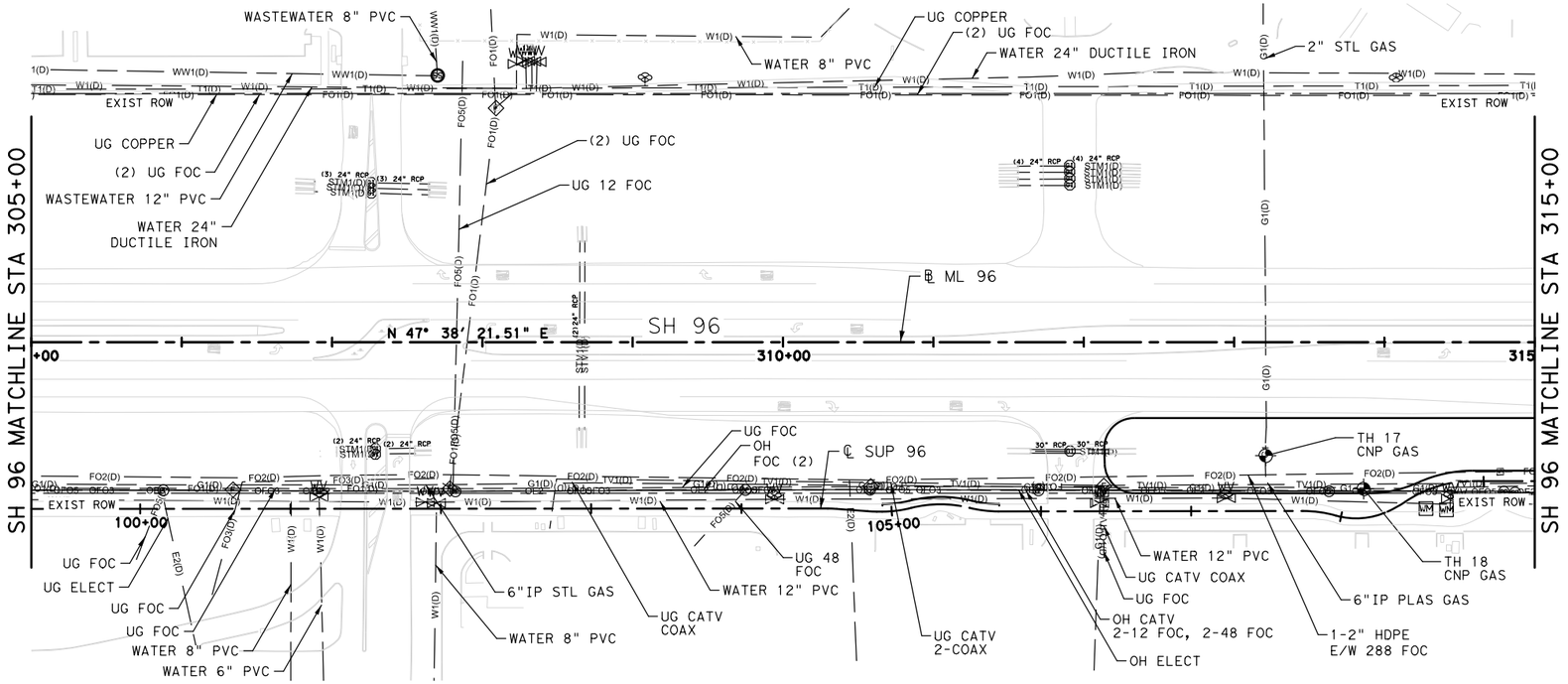

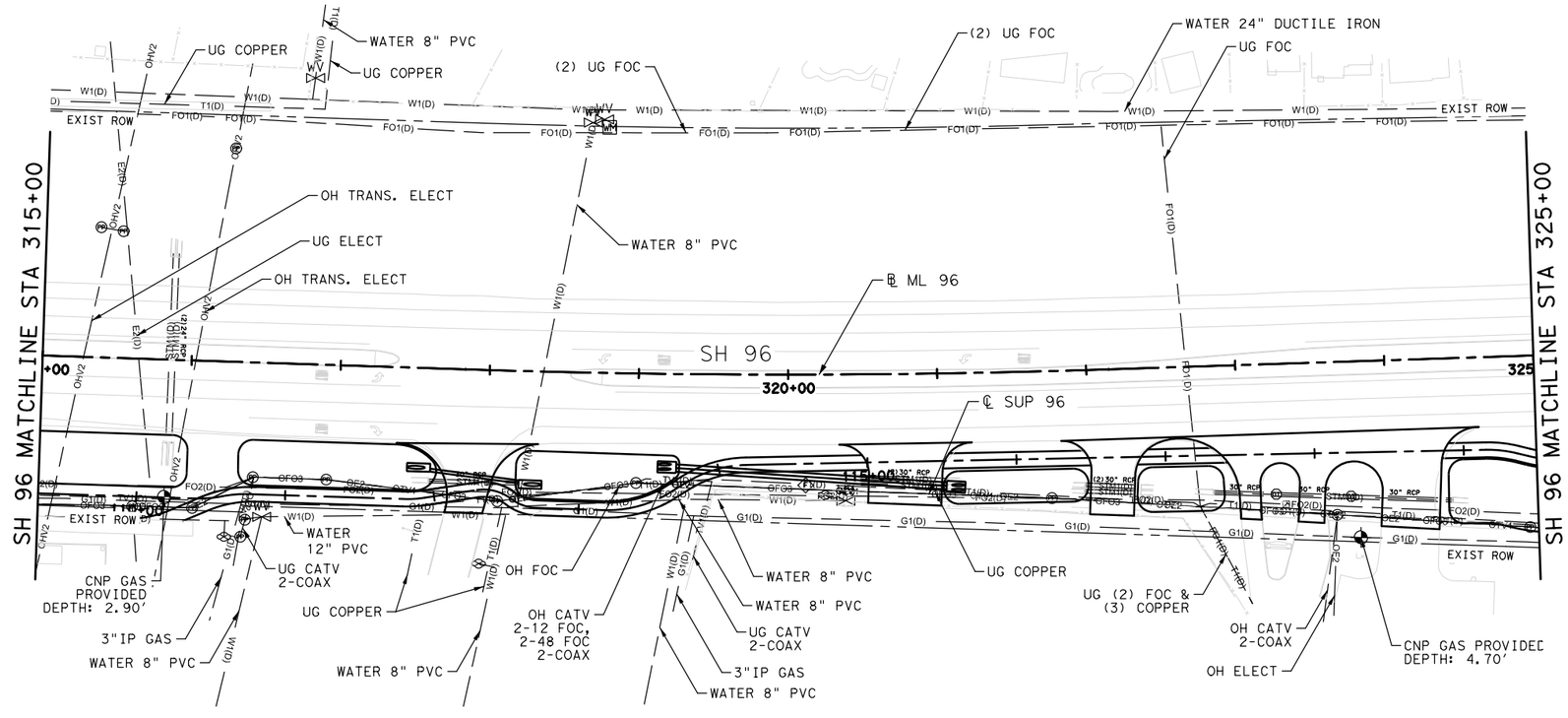

NO.	DATE	REVISION	APPROVED

STATE OF TEXAS
DAKOTA W. SMITH
133272
LICENSED
PROFESSIONAL ENGINEER
7/26/2023

LAMB-STAR ENGINEERING, LLC
TEXAS REGISTERED ENGINEERING FIRM F-9073

Texas Department of Transportation
©2023

LAMB-STAR ENGINEERING, LLC
3801 PARKWOOD BLVD, SUITE 550
FRISCO, TEXAS 75034 (214) 440-3600
TEXAS REGISTERED ENGINEERING FIRM F-9073

EXISTING UTILITY LAYOUT

STA 305+00 TO STA 325+00

SHEET 11 OF 16

DRAWN	FED. RD. DIV. NO.	FEDERAL AID PROJECT NO.		HIGHWAY NO.
LSE	06			FM 270 ETC
DESIGNED	STATE	DIST.	COUNTY	SHEET NO.
LSE		HOUSTON	GALVESTON	
CHECKED	CONT.	SECT.	JOB	260
LSE	0912	73	215	
APPROVED				
LSE				

PLOTDRIVER: LCBF - UTIL Color.pltcfg PENTABLE: LCBF.tbl
DATE: 7/26/2023 11:15:14 AM USER: Beth. Bowden
FILE: c:\bms\pwe101-01\beth bowden\dms22655\LCBF_UTIL12.dgn

0' 25' 50' 100'

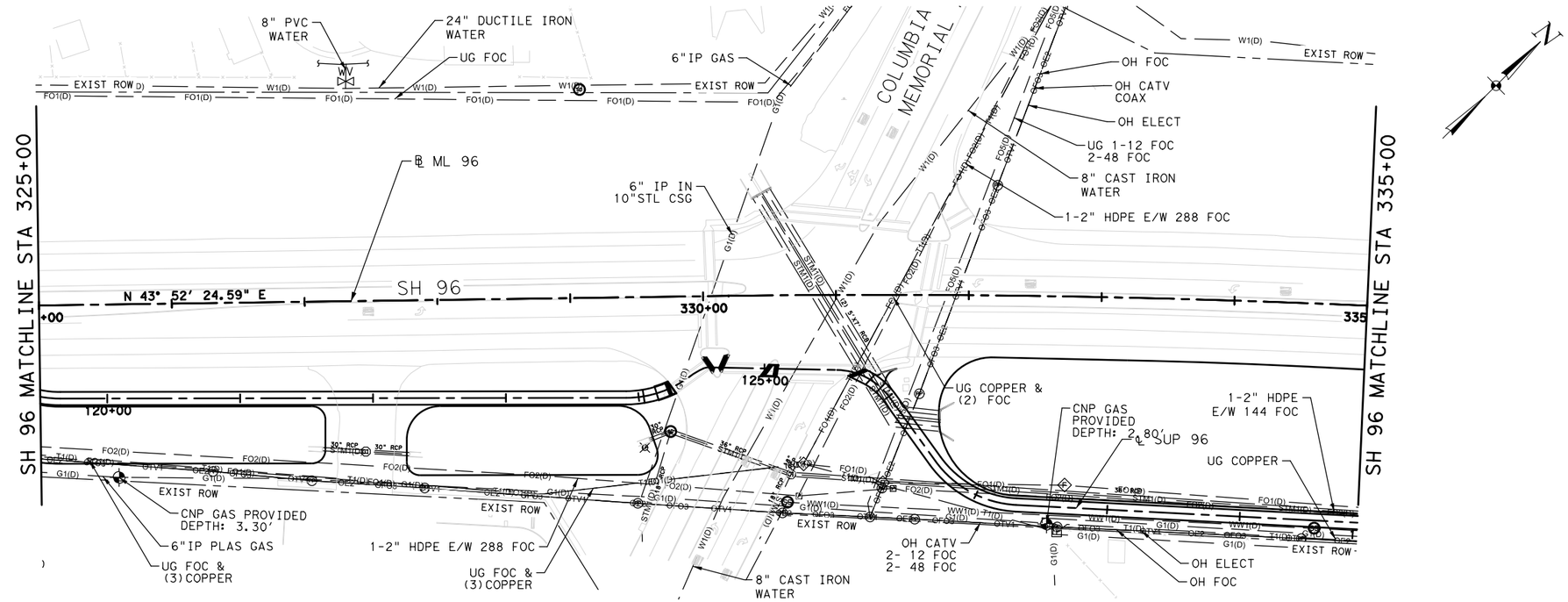

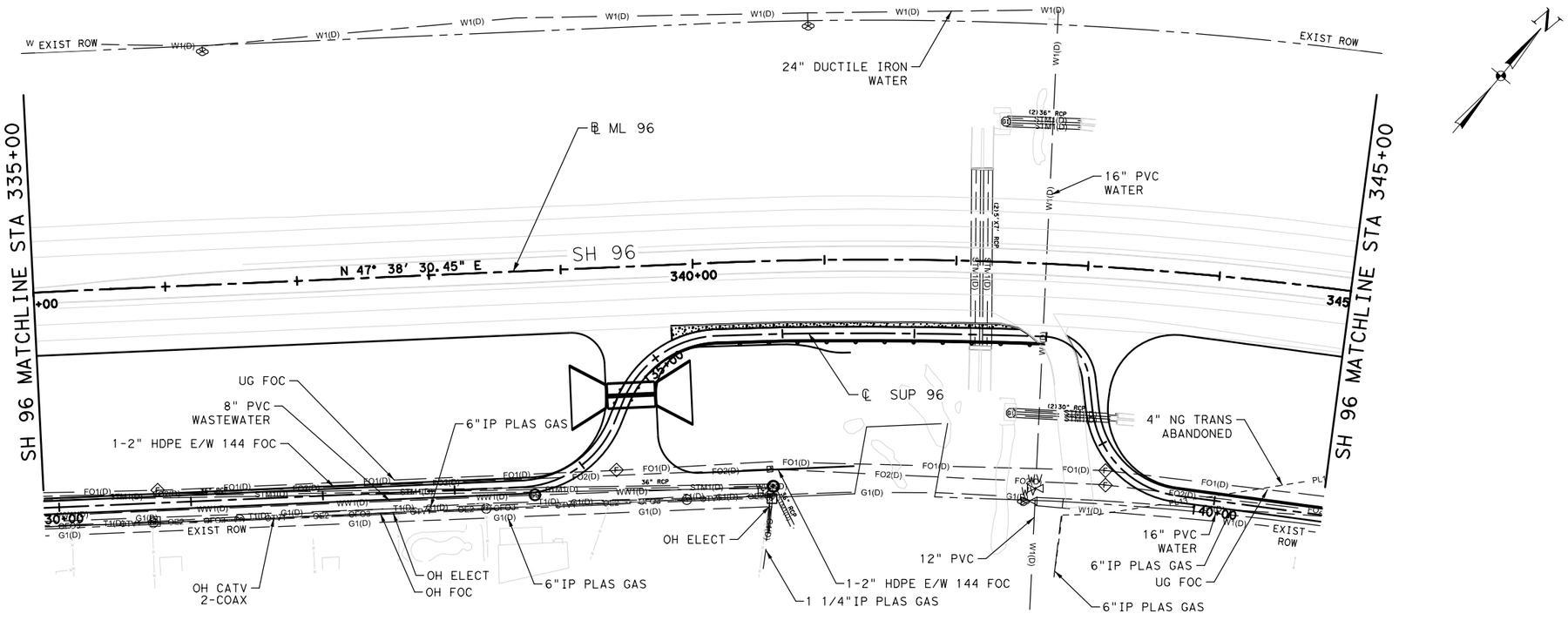

NO.	DATE	REVISION	APPROVED

STATE OF TEXAS
DAKOTA W. SMITH
133272
LICENSED
PROFESSIONAL ENGINEER
7/26/2023

LAMB-STAR ENGINEERING, LLC
TEXAS REGISTERED ENGINEERING FIRM F-9073

Texas Department of Transportation
©2023

LAMB-STAR ENGINEERING, LLC
3801 PARKWOOD BLVD, SUITE 550
FRISCO, TEXAS 75034 (214) 440-3600
TEXAS REGISTERED ENGINEERING FIRM F-9073

EXISTING UTILITY LAYOUT

STA 325+00 TO STA 345+00

SHEET 12 OF 16

DRAWN	FED. RD. DIV. NO.	FEDERAL AID PROJECT NO.		HIGHWAY NO.
LSE	06			FM 270 ETC
DESIGNED	STATE	DIST.	COUNTY	SHEET NO.
LSE		HOUSTON	GALVESTON	
CHECKED	CONT.	SECT.	JOB	261
LSE	0912	73	215	
APPROVED				
LSE				

PLOTDRIVER: LCBF - UTIL Color.pltcfg PENTABLE: LCBF.tbl
DATE: 7/26/2023 11:15:16 AM USER: Beth. Bowden
FILE: c:\bms\pwe101-01\beth bowden\dms22655\LCBF_UTIL13.dgn

0′ 25′ 50′ 100′

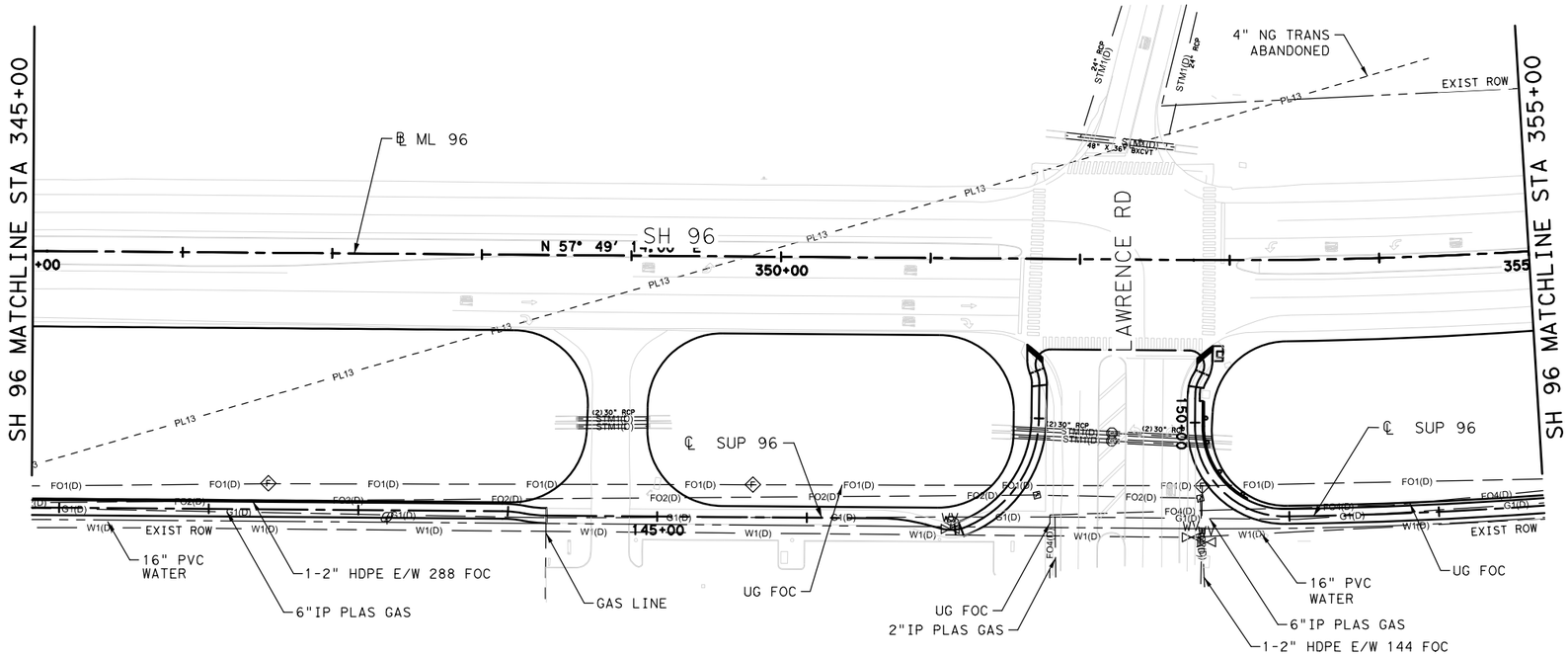

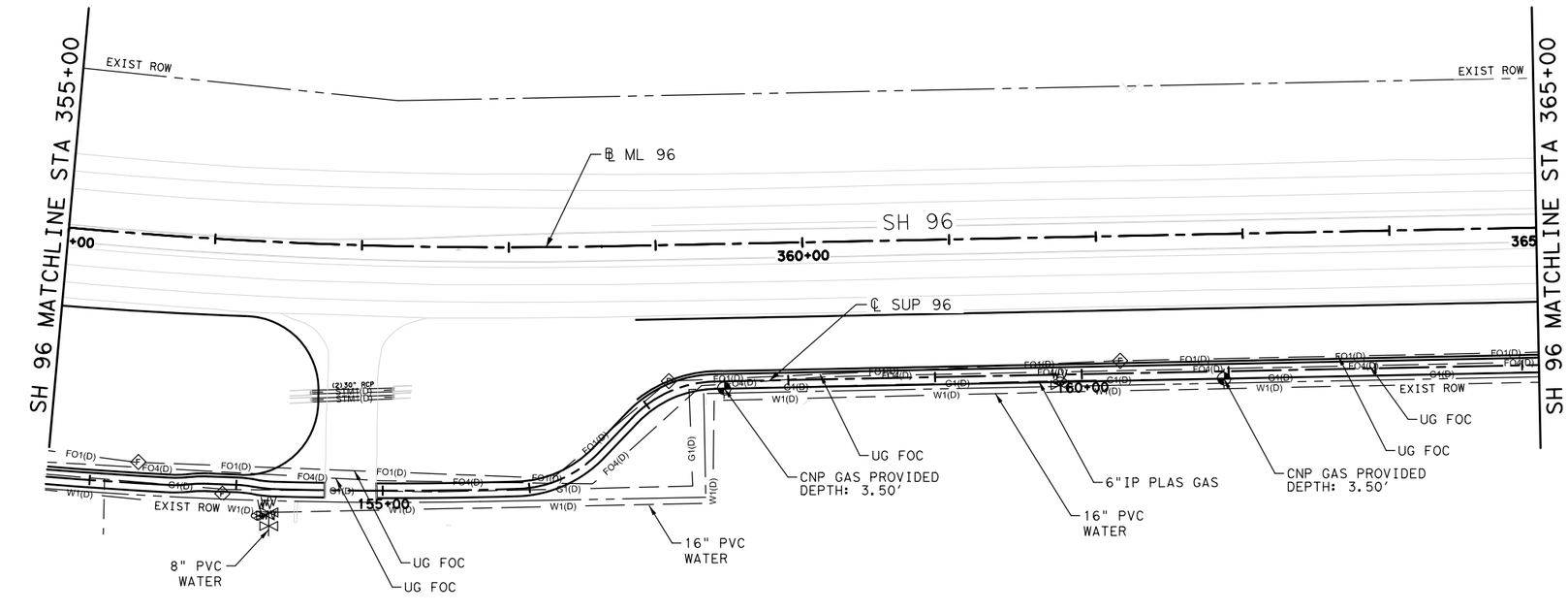

NO.	DATE	REVISION	APPROVED

STATE OF TEXAS
DAKOTA W. SMITH
133272
LICENSED PROFESSIONAL ENGINEER
7/26/2023

LAMB-STAR ENGINEERING, LLC
TEXAS REGISTERED ENGINEERING FIRM F-9073

Texas Department of Transportation
©2023

LAMB-STAR ENGINEERING, LLC
3801 PARKWOOD BLVD, SUITE 550
FRISCO, TEXAS 75034 (214) 440-3600
TEXAS REGISTERED ENGINEERING FIRM F-9073

EXISTING UTILITY LAYOUT

STA 345+00 TO STA 365+00

SHEET 13 OF 16

DRAWN	FED. RD. DIV. NO.	FEDERAL AID PROJECT NO.		HIGHWAY NO.
LSE	06			FM 270 ETC
DESIGNED	STATE	DIST.	COUNTY	SHEET NO.
LSE		HOUSTON	GALVESTON	
CHECKED	CONT.	SECT.	JOB	262
LSE	0912	73	215	
APPROVED				
LSE				

PLOTDRIVER: LCBF - UTIL Color.pltcfg PENTABLE: LCBF.tbl
DATE: 7/26/2023 11:15:18 AM USER: Beth. Bowden
FILE: c:\bms\pwe101-01\beth bowden\dms22655\LCBF_UTIL14.dgn

0' 25' 50' 100'

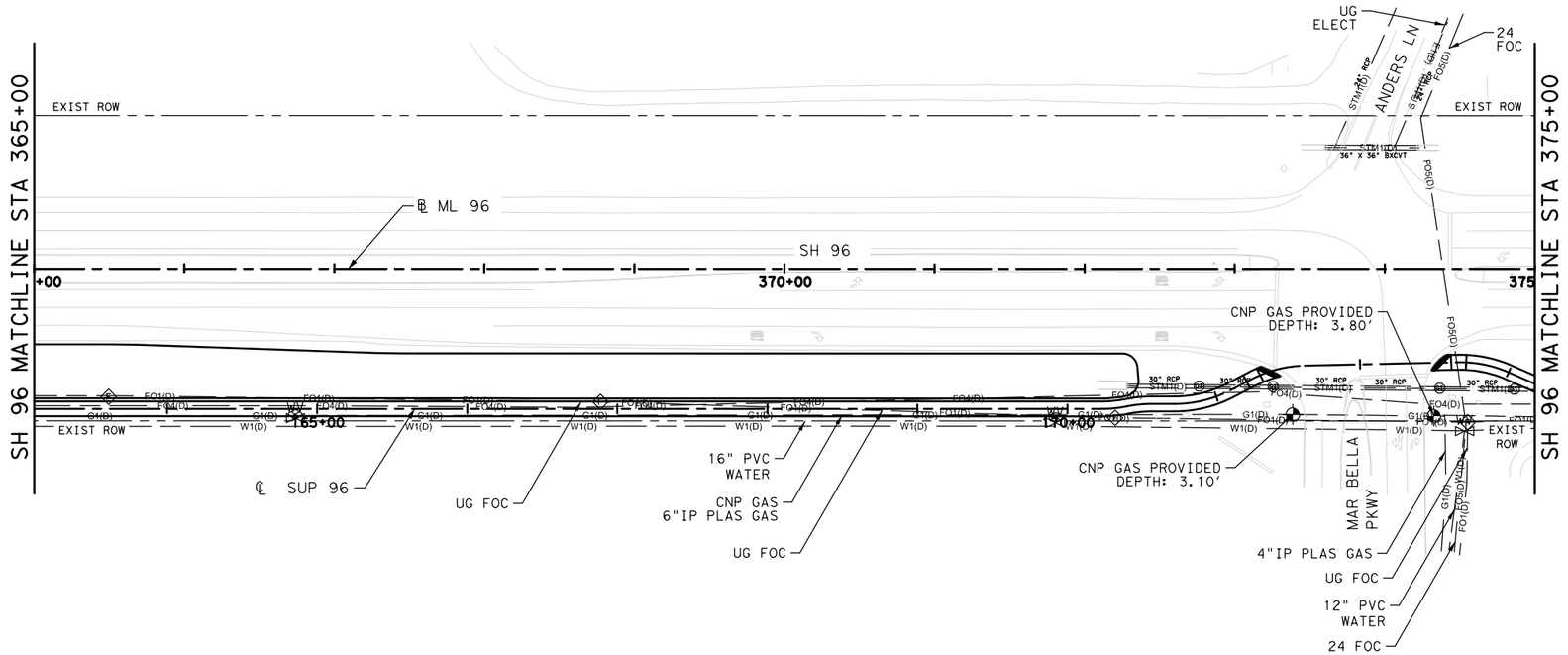

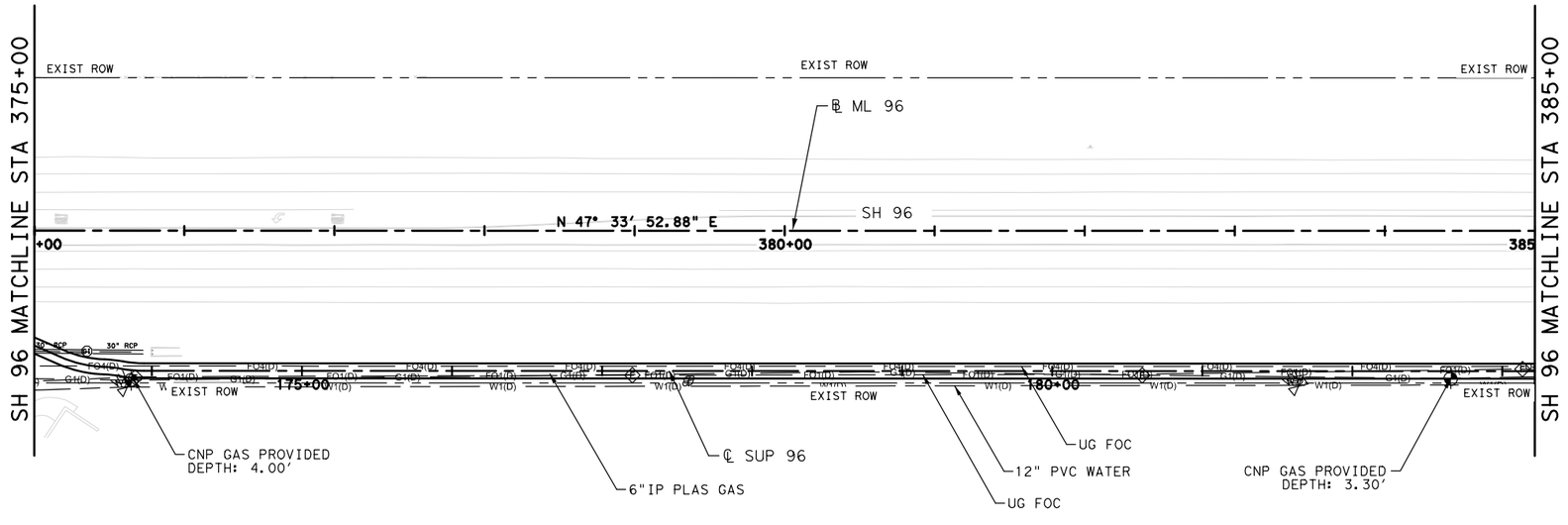

NO.	DATE	REVISION	APPROVED

STATE OF TEXAS
DAKOTA W. SMITH
133272
LICENSED
PROFESSIONAL ENGINEER
7/26/2023

LAMB-STAR ENGINEERING, LLC
TEXAS REGISTERED ENGINEERING FIRM F-9073

Texas Department of Transportation
©2023

LAMB-STAR ENGINEERING, LLC
3801 PARKWOOD BLVD, SUITE 550
FRISCO, TEXAS 75034 (214) 440-3600
TEXAS REGISTERED ENGINEERING FIRM F-9073

EXISTING UTILITY LAYOUT

STA 365+00 TO STA 385+00

SHEET 14 OF 16

DRAWN	FED. RD. DIV. NO.	FEDERAL AID PROJECT NO.		HIGHWAY NO.
LSE	06			FM 270 ETC
DESIGNED	STATE	DIST.	COUNTY	SHEET NO.
LSE		HOUSTON	GALVESTON	
CHECKED	CONT.	SECT.	JOB	263
LSE	0912	73	215	
APPROVED				
LSE				

PLOTDRIVER: LCBF - UTIL Color.pltcfg PENTABLE: LCBF.tbl
DATE: 7/26/2023 11:15:20 AM USER: Beth. Bowden
FILE: c:\bms\pwe101-01\beth bowden\dms22655\LCBF_UTIL15.dgn

0′ 25′ 50′ 100′

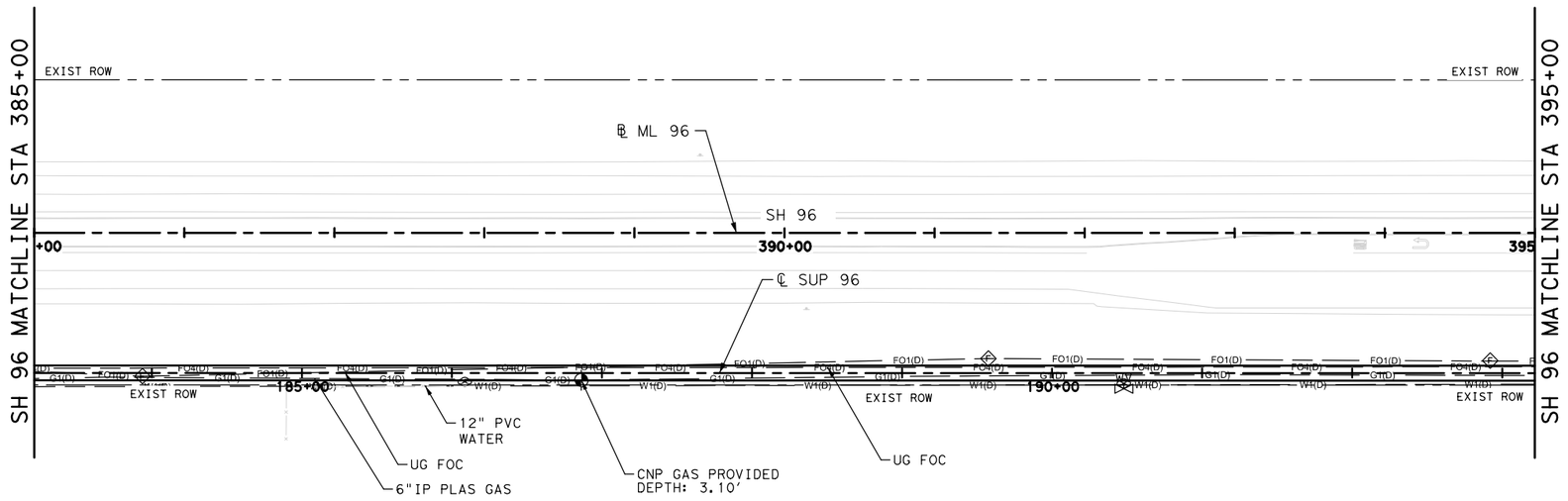

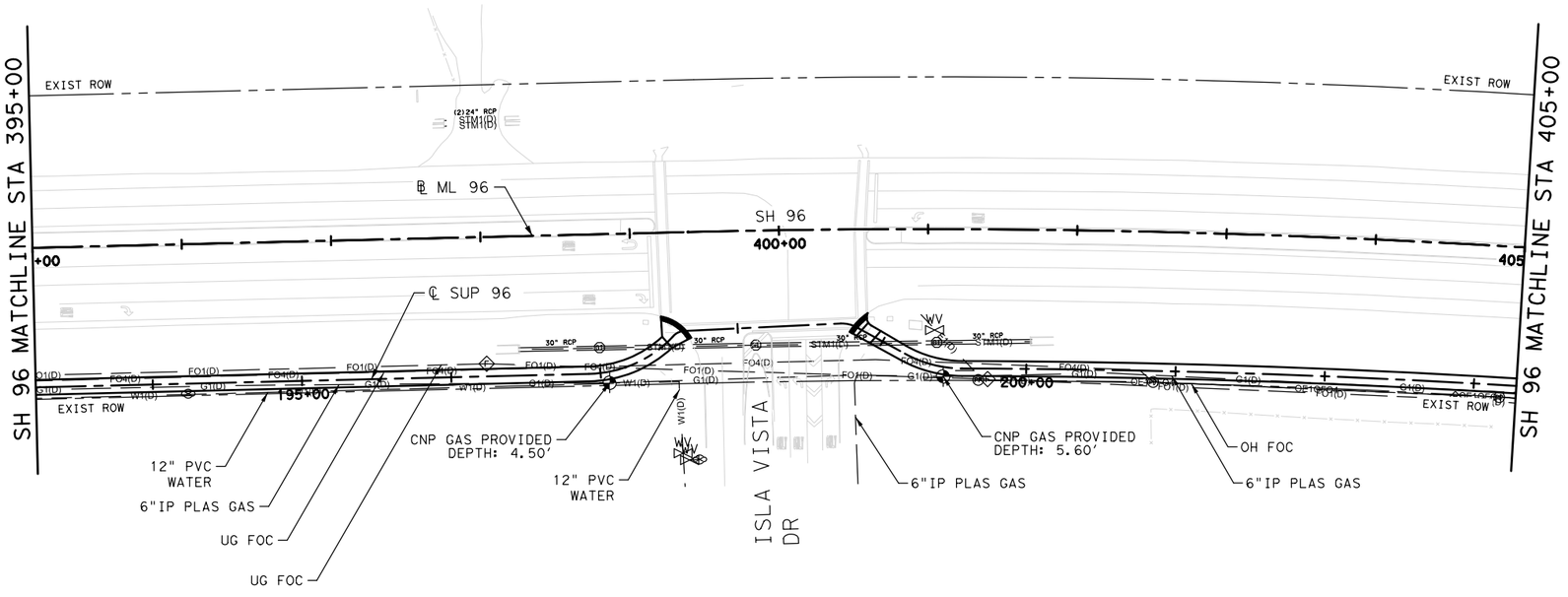

NO.	DATE	REVISION	APPROVED

STATE OF TEXAS
DAKOTA W. SMITH
133272
LICENSED
PROFESSIONAL ENGINEER
7/26/2023

LAMB-STAR ENGINEERING, LLC
TEXAS REGISTERED ENGINEERING FIRM F-9073

Texas Department of Transportation
©2023

LAMB-STAR ENGINEERING, LLC
3801 PARKWOOD BLVD, SUITE 550
FRISCO, TEXAS 75034 (214) 440-3600
TEXAS REGISTERED ENGINEERING FIRM F-9073

EXISTING UTILITY LAYOUT

STA 385+00 TO STA 405+00

SHEET 15 OF 16

DRAWN	FED. RD. DIV. NO.	FEDERAL AID PROJECT NO.		HIGHWAY NO.
LSE	06			FM 270 ETC
DESIGNED	STATE	DIST.	COUNTY	SHEET NO.
LSE		HOUSTON	GALVESTON	
CHECKED	CONT.	SECT.	JOB	264
LSE	0912	73	215	
APPROVED				
LSE				

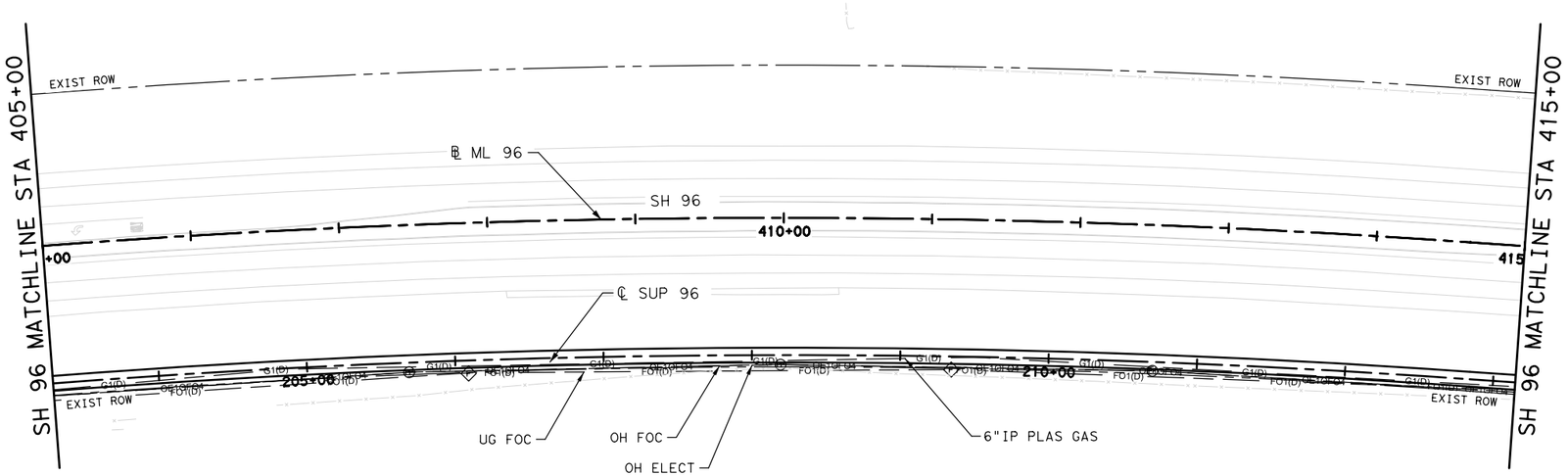

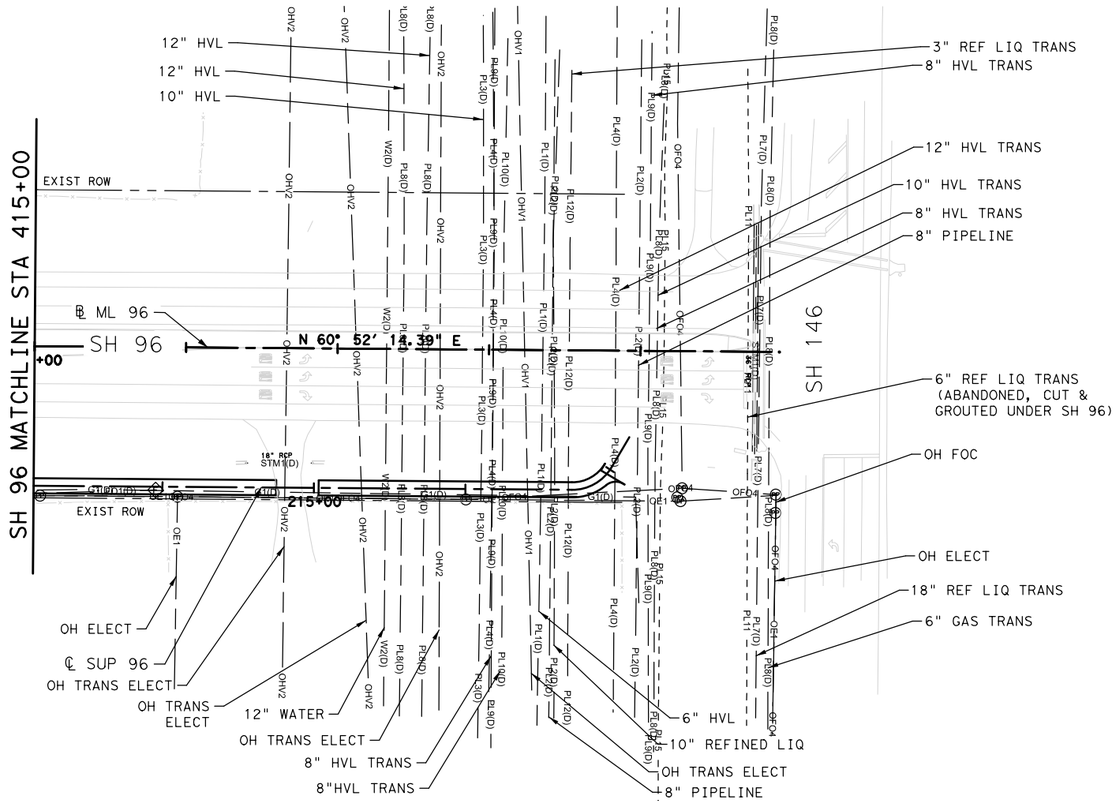

NO.	DATE	REVISION	APPROVED

STATE OF TEXAS
DAKOTA W. SMITH
133272
LICENSED
PROFESSIONAL ENGINEER
7/26/2023

LAMB-STAR ENGINEERING, LLC
TEXAS REGISTERED ENGINEERING FIRM F-9073

Texas Department of Transportation
©2023

LAMB-STAR ENGINEERING, LLC
3801 PARKWOOD BLVD, SUITE 550
FRISCO, TEXAS 75034 (214) 440-3600
TEXAS REGISTERED ENGINEERING FIRM F-9073

EXISTING UTILITY LAYOUT

STA 405+00 TO END

SHEET 16 OF 16

DRAWN	FED.RD. DIV.NO.	FEDERAL AID PROJECT NO.		HIGHWAY NO.
LSE	06			FM 270 ETC
DESIGNED	STATE	DIST.	COUNTY	SHEET NO.
LSE		HOUSTON	GALVESTON	265
CHECKED	CONT.	SECT.	JOB	
LSE	0912	73	215	
APPROVED				
LSE				

PLOTDRIVER: LCBF - UTIL Color.pltcfg PENTABLE:LCBF.tbl
DATE:7/26/2023 11:15:22 AM USER:Beth.Bowden
FILE:c:\bms\pwe101-01\beth bowden\dms22655\LCBF_UTIL16.dgn

NOTES FOR PERMANENT TRAFFIC SIGNAL(S):

1. TRAFFIC SIGNAL POLES, MAST ARMS, AND PEDESTAL POLES SHALL BE GALVANIZED STEEL AND BLACK POWDER COATED.

2. USE TYPE B (HIGH INTENSITY PRISMATIC) OR TYPE D (DIAMOND GRADE RETROREFLECTIVE SHEETING FOR SIGNS MOUNTED UNDER OR ADJACENT TO THE SIGNAL HEADS.

3. FURNISH VEHICLE AND COUNTDOWN PEDESTRIAN SIGNALS WITH LIGHT EMITTING DIODE (LED) SIGNAL LAMP UNITS.

4. FURNISH BLACK HOUSING FOR VEHICLE AND PEDESTRIAN SIGNALS. FURNISH BLACK VEHICLE HEAD BACK PLATES WITH 2" YELLOW REFLECTIVE BORDER.

5. SYMBOLIC PEDESTRIAN SIGNAL HEAD SHALL BE LED AUDIBLE PEDESTRIAN AND 12-IN. COUNTDOWN.

6. THE TRAFFIC SIGNAL CONSTRUCTION AND MAINTENANCE OFFICE WILL PROVIDE PHASING AND TIMING FOR PERMANENT TRAFFIC SIGNALS.

7. LOCATE MAST ARM POLES, DETECTORS, ETC., AS APPROVED.

8. RADAR ADVANCE DETECTION DEVICE MUST CONTINUOUSLY TRACK VEHICLE SPEED DISTANCE, AND ESTIMATED TIME OF ARRIVAL.

9. FURNISH SYMBOL TYPE PEDESTRIAN COUNTDOWN SIGNALS. INSTALL USING MOUNTING HEIGHT IN ACCORDANCE WITH THE LATEST "TEXAS MANUAL ON UNIFORM CONTROL DEVICES."

10. FURNISH MATERIALS NECESSARY TO INSTALL ACCESSIBLE PEDESTRIAN PUSH BUTTON SIGNS AND PEDESTRIAN PUSH BUTTONS AS SHOWN IN THE PLANS. INSTALL PUSH BUTTON AT 3 FT. - 6 IN. TO 4 FT. - 0 IN. ABOVE THE SIDEWALK OR CONCRETE WALKWAY.

11. REPAIR OR REPLACE PAVEMENT AND SIDEWALKS DAMAGED BY THE CONTRACTOR'S FORCES DURING CONSTRUCTION AT NO COST TO THE DEPARTMENT.

12. SEAL ENDS OF ALL CONDUITS WITH DUCT SEAL, EXPANDABLE FOAM, OR BY OTHER METHODS APPROVED BY THE ENGINEER. SEAL CONDUIT IMMEDIATELY AFTER COMPLETION OF CONDUCTOR INSTALLATION AND PULL TESTS. DO NOT USE DUCT TAPE AS A PERMANENT CONDUIT SEALANT. DO NOT USE SILICONE CAULK AS A CONDUIT SEALANT.

13. CAP SPARE CONDUITS INSTALLED IN POLE FOUNDATIONS AND GROUND BOXES USING APPROVED CAPPING DEVICES.

14. WORK IN THE CONTROLLER CABINET SHALL INCLUDE INSTALLING THE EQUIPMENT AND PERFORMING THE WORK NECESSARY TO CONNECT AND OPERATE THE RADAR VEHICLE DETECTION SYSTEM AT THE INTERSECTION.

15. INSTALL PEDESTRIAN SIGNAL POLES WITH SCREW-IN ANCHOR FOUNDATION.

16. WRAP SIGNAL HEADS WITH DARK PLASTIC OR SUITABLE MATERIAL TO CONCEAL THE SIGNAL FACES FROM THE TIME OF INSTALLATION UNTIL PLACING INTO OPERATION.

17. GROUND ALL STEEL MAST ARM POLE ASSEMBLIES IN ACCORDANCE WITH THE REQUIREMENTS SHOWN ON THE LATEST TRAFFIC SIGNAL POLE FOUNDATION STANDARD. USE THE GROUNDING LUG ON THE POLE TO GROUND THE POLE TO THE GROUND CONDUCTORS FROM THE CONDUIT.

18. REFER TO TXDOT'S WEBSITE FOR PRE-QUALIFIED PRODUCTS LIST REGARDING RADARS, VEHICLE LED TRAFFIC SIGNAL LAMP UNITS, CONDUIT, GROUND BOXES, CONDUCTORS AND ELECTRICAL SERVICE. CHECK WEBSITE PERIODICALLY FOR CURRENT UPDATES.

18. ONCE THE INTEGRITY AND/OR FUNCTION OF THE EXISTING TRAFFIC SIGNAL(S) IS ALTERED BY THE CONTRACTOR, MAINTAIN AND OPERATE THE EXISTING TRAFFIC SIGNAL(S) UNTIL THE TRAFFIC SIGNAL WORK IS ACCEPTED BY THE DEPARTMENT. DURING THE CONSTRUCTION OF THE PROPOSED TRAFFIC SIGNAL WORK, MAINTAIN THE EXISTING TRAFFIC SIGNAL(S) AND/OR TEMPORARY CONSTRUCTION TRAFFIC SIGNAL(S) IN CONFORMANCE WITH THE LATEST TEXAS MANUAL ON UNIFORM TRAFFIC CONTROL DEVICES.

19. DURING CONSTRUCTION OF THE PROPOSED SIGNAL WORK, IF THE EXISTING TRAFFIC SIGNAL EQUIPMENT REQUIRES REPLACEMENT DUE TO WEAR, DETERIORATION, OR ANY CIRCUMSTANCE OVER WHICH THE CONTRACTOR HAS NO CONTROL, THE EQUIPMENT WILL BE FURNISHED BY THE DEPARTMENT AT NO COST TO THE CONTRACTOR. INSTALL THE EQUIPMENT AT NO COST TO THE DEPARTMENT. SUCH MATERIALS WILL BE PROVIDED AT THE DEPARTMENT'S SIGNAL SHOP LOCATED AT 6810 KATY ROAD, HOUSTON, TEXAS. CONTACT MR. MICHAEL AWA, P.E., AT TELEPHONE NUMBER (713) 802-5661.

20. CONTACT MR. MICHAEL AWA, P.E., AT TEXAS DEPARTMENT OF TRANSPORTATION, P.O. BOX 1386, HOUSTON, TEXAS 77251-1386, TEL. NO. (713) 802-5661. WHEN REMOVING EXISTING SIGNAL SYSTEMS; HIS EMPLOYEES WILL DETERMINE WHICH ITEMS WILL BE SALVAGED. ITEMS DEEMED SALVAGEABLE WILL BE DELIVERED TO THE DEPARTMENT'S SIGNAL SHOP AT 6810 KATY ROAD, HOUSTON, TEXAS, BETWEEN 9:00 AM AND 3:00 PM, MONDAY THROUGH FRIDAY. CAREFULLY REMOVE THE MATERIALS SO THAT THEY WILL NOT BE MARRED OR DAMAGED. DISPOSE OF OTHER ITEMS REMOVED BY THE CONTRACTOR AT NO EXPENSE TO THE DEPARTMENT.

21. ONCE THE INTEGRITY AND/OR FUNCTION OF THE EXISTING TRAFFIC SIGNAL(S) IS ALTERED BY THE CONTRACTOR, MAINTAIN AND OPERATE THE EXISTING TRAFFIC SIGNAL(S) UNTIL THE TRAFFIC SIGNAL WORK IS ACCEPTED BY THE DEPARTMENT. DURING THE CONSTRUCTION OF THE PROPOSED TRAFFIC SIGNAL WORK, MAINTAIN THE EXISTING TRAFFIC SIGNAL(S) AND/OR TEMPORARY CONSTRUCTION TRAFFIC SIGNAL(S) IN CONFORMANCE WITH THE LATEST TEXAS MANUAL ON UNIFORM TRAFFIC CONTROL DEVICES.

NO.	DATE	REVISION	APPROVED

Emily Moran, P.E. PTOE

STATE OF TEXAS
EMILY F. MORAN
138135
LICENSED
PROFESSIONAL ENGINEER

8/2/2023

Texas Department of Transportation
©2023

JONES|CARTER
Texas Board of Professional Engineers Registration No. F-23290
4350 Lockhill Selma Rd, Suite 100 • San Antonio, Texas 78249 • 210.494.5511

TRAFFIC SIGNAL GENERAL NOTES

SHEET **01** OF **01**

DRAWN	FED.RD. DIV.NO.	FEDERAL AID PROJECT NO.		HIGHWAY NO.
LM	06			FM 270, ETC
DESIGNED	STATE	DIST.	COUNTY	SHEET NO.
EM	TEXAS	HOUSTON	GALVESTON	266
CHECKED	CONT.	SECT.	JOB	
GP	0912	73	215	
APPROVED				
DD				

PLOTDRIVER: LCBF.pltcfg PENTABLE: LCBF.tbl
DATE: 8/2/2023 9:49:29 AM USER: EFM
FILE: c:\bms\pwe101-01\emily.moran\dms22654\LCBF_TS_General Notes.dgn

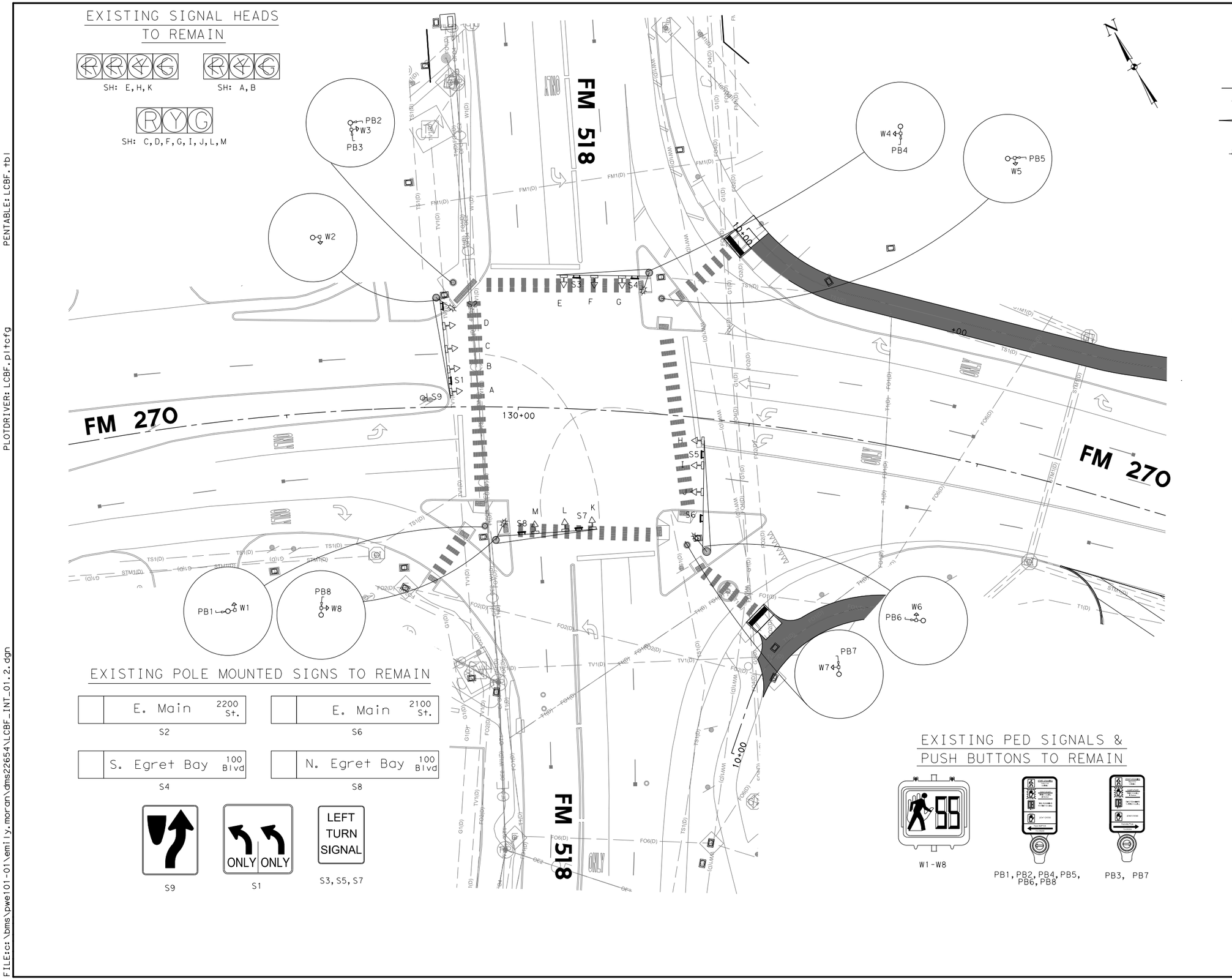

0' 10' 20' 40'

LEGEND

- RIGHT OF WAY
- EXISTING GROUND MOUNTED SIGN
- EXISTING MAST ARM POLE
- EXISTING PEDESTRIAN POLE
- EXISTING LUMINAIRE
- EXISTING TRAFFIC SIGNAL HEAD
- EXISTING PEDESTRIAN SIGNAL HEAD
- EXISTING PEDESTRIAN PUSH BUTTON
- EXISTING MAST ARM SIGN
- EXISTING RADAR DETECTION
- EXISTING CONTROLLER W/CABINET
- EXISTING GROUND BOX
- EXISTING SERVICE POLE
- EXISTING ANTENNA
- DIRECTION OF FLOW

NO.	DATE	REVISION	APPROVED

Emily Moran, P.E., PTOE

STATE OF TEXAS
EMILY F. MORAN
138135
LICENSED PROFESSIONAL ENGINEER

7/27/2023

Texas Department of Transportation
©2023

JONES|CARTER
Texas Board of Professional Engineers Registration No. F-23290
4350 Lockhill Selma Rd, Suite 100 • San Antonio, Texas 78249 • 210.494.5511

FM 270 AT FM 518 SIGNAL LAYOUT

SHEET 01 OF 27

DRAWN	FED. RD. DIV. NO.	FEDERAL AID PROJECT NO.		HIGHWAY NO.
LM	06			FM 270, ETC
DESIGNED	STATE	DIST.	COUNTY	SHEET NO.
EM	TEXAS	HOUSTON	GALVESTON	267
CHECKED	CONT.	SECT.	JOB	
GP	0912	73	215	
APPROVED				
DD				

PENTABLE: LCBF.tbl
PLOTDRIVER: LCBF.pltcfg
USER: EFM
DATE: 7/27/2023 4:50:54 PM
FILE: c:\bms\pwe101-01\emily.moran\dms22654\LCBF_INT_01.2.dgn

PLOTDRIVER: LCBF.pltcfg
PENTABLE: LCBF.tbl
DATE: 7/27/2023 4:50:56 PM USER: EFM
FILE: c:\bms\pwe101-01\emily.moran\dms22654\LCBF_INT_02.2.dgn

0' 10' 20' 40'

EXISTING SIGNAL HEADS TO REMAIN

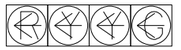

SH: A, F

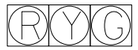

SH: B, C, D, E, G, H, I

LEGEND

- RIGHT OF WAY
- EXISTING GROUND MOUNTED SIGN
- EXISTING MAST ARM POLE
- EXISTING PEDESTRIAN POLE
- EXISTING LUMINAIRE
- EXISTING TRAFFIC SIGNAL HEAD
- EXISTING PEDESTRIAN SIGNAL HEAD
- EXISTING PEDESTRIAN PUSH BUTTON
- EXISTING MAST ARM SIGN
- EXISTING RADAR DETECTION
- EXISTING CONTROLLER W/CABINET
- EXISTING GROUND BOX
- EXISTING SERVICE POLE
- EXISTING ANTENNA
- DIRECTION OF FLOW

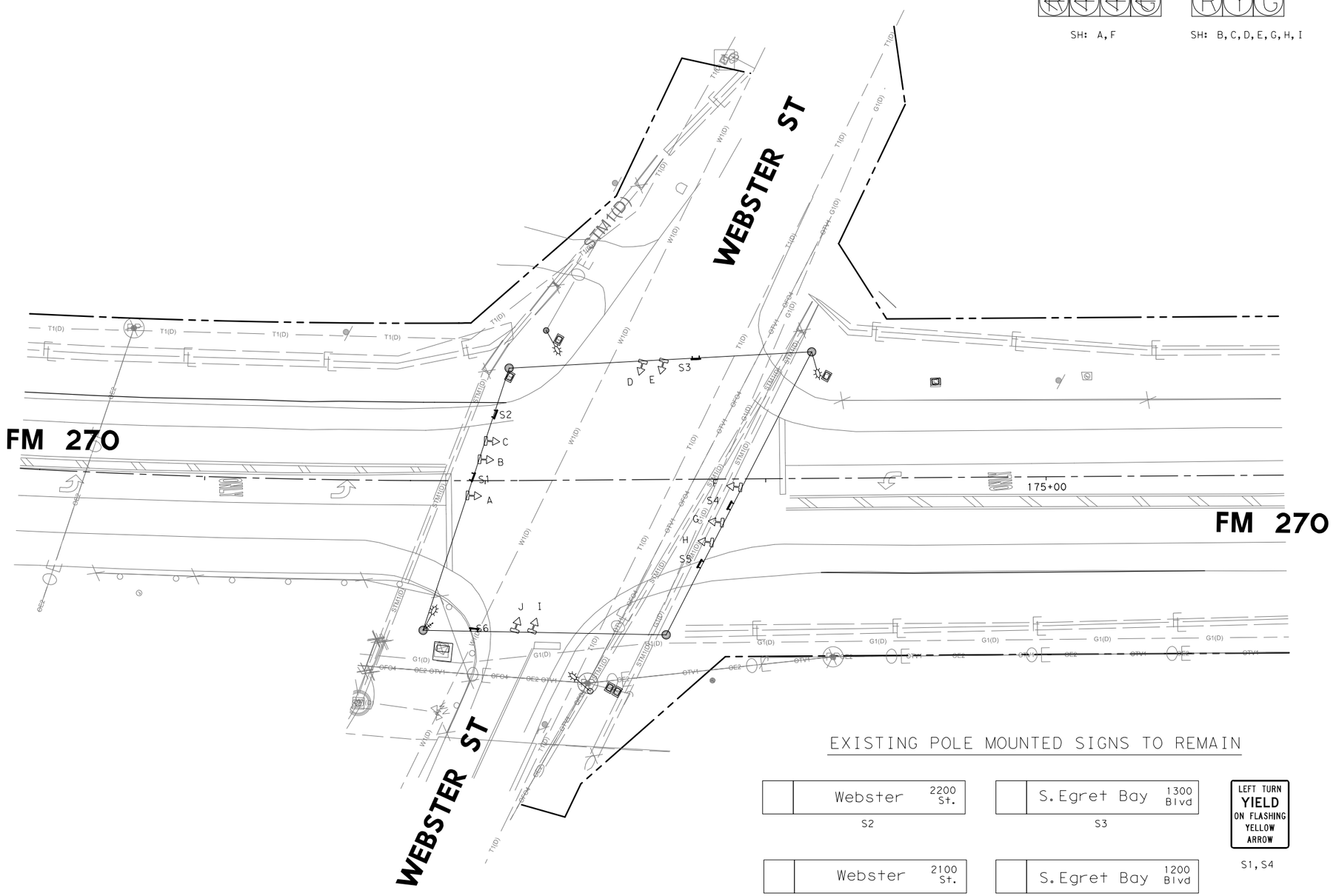

EXISTING POLE MOUNTED SIGNS TO REMAIN

Webster 2200 St. (S2)	S. Egret Bay 1300 Blvd (S3)	LEFT TURN YIELD ON FLASHING YELLOW ARROW (S1, S4)
Webster 2100 St. (S5)	S. Egret Bay 1200 Blvd (S6)	

NO.	DATE	REVISION	APPROVED

Emily Moran, PE., PTOE

STATE OF TEXAS
EMILY F. MORAN
138135
LICENSED PROFESSIONAL ENGINEER

7/27/2023

Texas Department of Transportation
©2023

JONES|CARTER
Texas Board of Professional Engineers Registration No. F-23290
4350 Lockhill Selma Rd, Suite 100• San Antonio, Texas 78249 •210.494.5511

FM 270 AT WEBSTER ST SIGNAL LAYOUT

SHEET 02 OF 27

DRAWN	FED. RD. DIV. NO.	FEDERAL AID PROJECT NO.		HIGHWAY NO.
LM	06			FM 270, ETC
DESIGNED	STATE	DIST.	COUNTY	SHEET NO.
EM	TEXAS	HOUSTON	GALVESTON	268
CHECKED	CONT.	SECT.	JOB	
GP	0912	73	215	
APPROVED				
DD				

PLOTDRIVER: LCBF.pltcfg PENTABLE: LCBF.tbl
DATE: 7/27/2023 4:50:57 PM USER: EFM
FILE: c:\bms\pwe101-01\emily.moran\dms22654\LCBF_INT_03.2.dgn

0' 10' 20' 40'

EXISTING PED SIGNALS & PUSH BUTTONS TO REMAIN

W1-W8

PB2, PB4, PB6, PB8

PB1, PB3, PB5, PB7

EXISTING SIGNAL HEADS TO REMAIN

SH: A, F

SH: B, C, D, E, G, H, I, J

LEGEND

- RIGHT OF WAY
- EXISTING GROUND MOUNTED SIGN
- EXISTING MAST ARM POLE
- EXISTING PEDESTRIAN POLE
- EXISTING LUMINAIRE
- EXISTING TRAFFIC SIGNAL HEAD
- EXISTING PEDESTRIAN SIGNAL HEAD
- EXISTING PEDESTRIAN PUSH BUTTON
- EXISTING MAST ARM SIGN
- EXISTING RADAR DETECTION
- EXISTING CONTROLLER W/CABINET
- EXISTING GROUND BOX
- EXISTING SERVICE POLE
- EXISTING ANTENNA
- DIRECTION OF FLOW

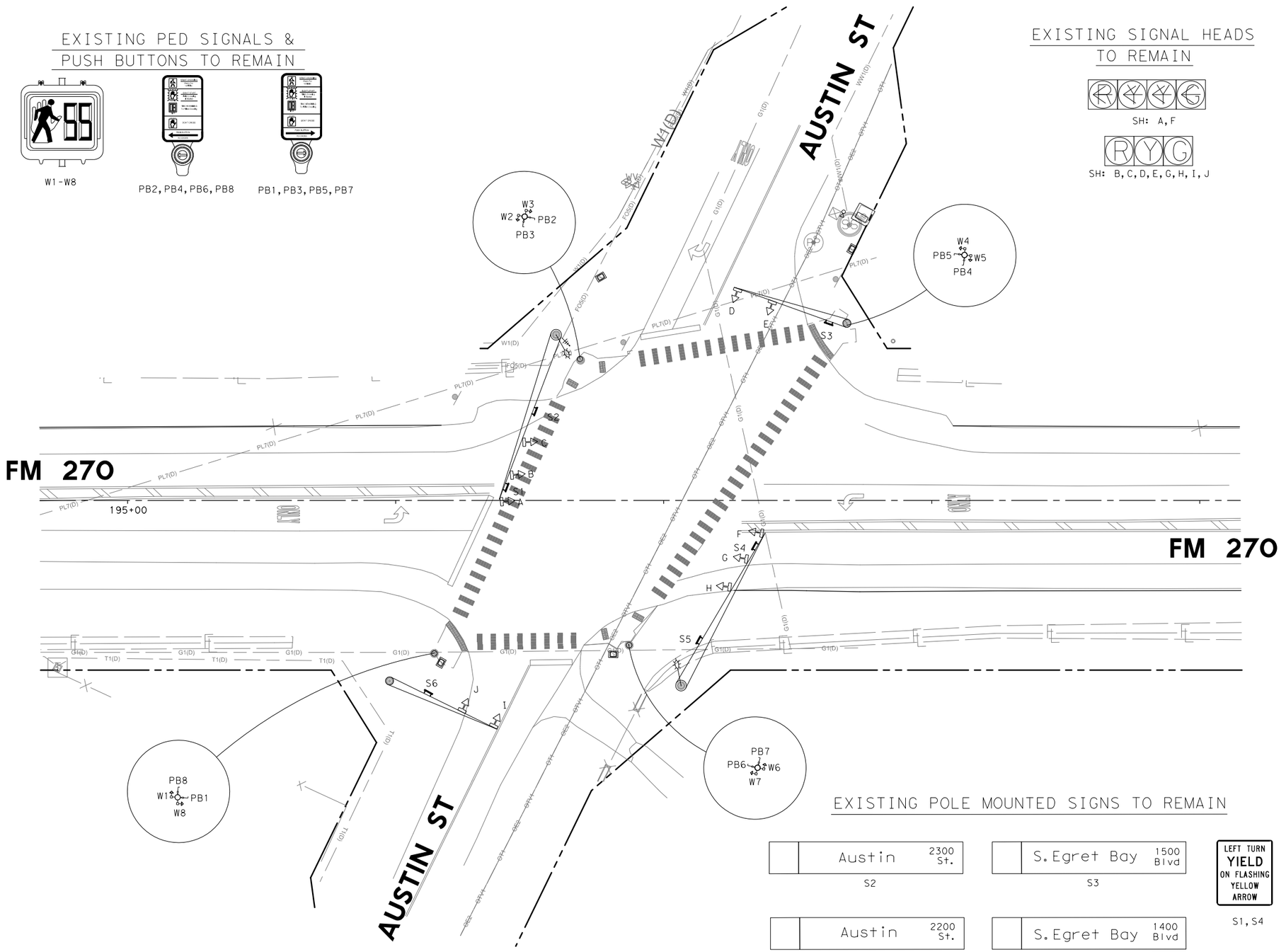

EXISTING POLE MOUNTED SIGNS TO REMAIN

Austin 2300 St.	S. Egret Bay 1500 Blvd	LEFT TURN YIELD ON FLASHING YELLOW ARROW
S2	S3	S1, S4
Austin 2200 St.	S. Egret Bay 1400 Blvd	
S5	S6	

NO.	DATE	REVISION	APPROVED

Emily Moran, PE, PTOE

STATE OF TEXAS
EMILY F. MORAN
138135
LICENSED
PROFESSIONAL ENGINEER

7/27/2023

Texas Department of Transportation
©2023

JONES|CARTER
Texas Board of Professional Engineers Registration No. F-23290
4350 Lockhill Selma Rd, Suite 100 • San Antonio, Texas 78249 • 210.494.5511

FM 270 AT AUSTIN ST SIGNAL LAYOUT

SHEET 03 OF 27

DRAWN	FED.RD. DIV.NO.	FEDERAL AID PROJECT NO.		HIGHWAY NO.
LM	06			FM 270, ETC
DESIGNED	STATE	DIST.	COUNTY	SHEET NO.
EM	TEXAS	HOUSTON	GALVESTON	269
CHECKED	CONT.	SECT.	JOB	
GP	0912	73	215	
APPROVED				
DD				

PLOTDRIVER: LCBF.pltcfg
PENTABLE: LCBF.tbl
DATE: 7/27/2023 4:50:58 PM USER: EFM
FILE: c:\bms\pwe101-01\emily.moran\dms22654\LCBF_INT_04.1.dgn

0' 10' 20' 40'

EXISTING SIGNAL HEADS TO REMAIN

SH: A, D, G, J

SH: B, C, E, F, H, I, K, L

EXISTING PED SIGNALS & PUSH BUTTONS TO REMAIN

W1-W8

EXISTING PED SIGNALS & PUSH BUTTONS TO BE REMOVED

PB2, PB4, PB6, PB8 PB1, PB3, PB5, PB7

LEGEND

- RIGHT OF WAY
- EXISTING GROUND MOUNTED SIGN
- EXISTING MAST ARM POLE
- EXISTING PEDESTRIAN POLE
- EXISTING LUMINAIRE
- EXISTING TRAFFIC SIGNAL HEAD
- EXISTING PEDESTRIAN SIGNAL HEAD
- EXISTING PEDESTRIAN PUSH BUTTON
- EXISTING MAST ARM SIGN
- EXISTING RADAR DETECTION
- EXISTING CONTROLLER W/CABINET
- EXISTING GROUND BOX
- EXISTING SERVICE POLE
- EXISTING ANTENNA
- DIRECTION OF FLOW

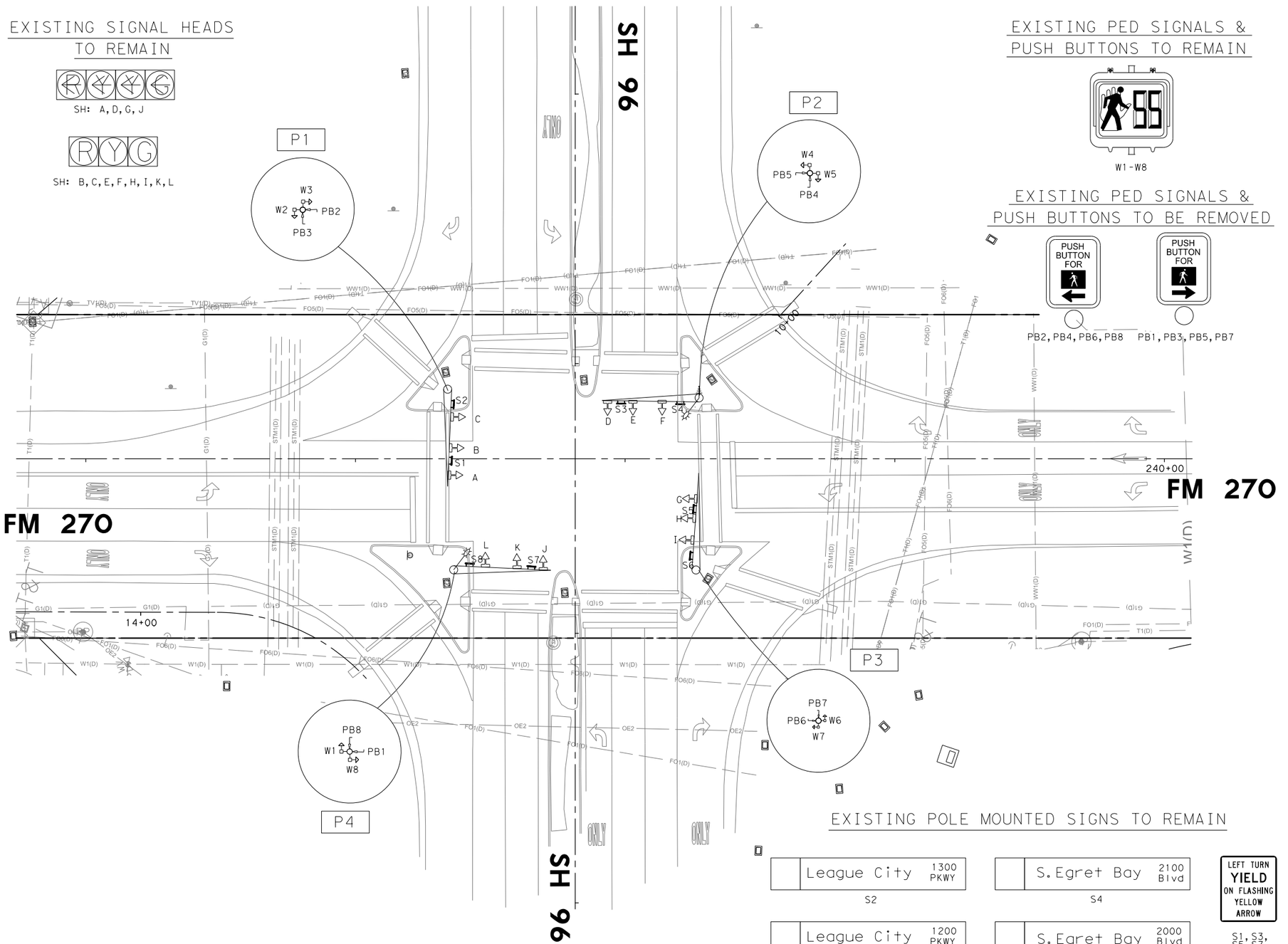

EXISTING POLE MOUNTED SIGNS TO REMAIN

League City 1300 PKWY	S. Egret Bay 2100 Blvd	LEFT TURN YIELD ON FLASHING YELLOW ARROW
S2	S4	S1, S3, S5, S7
League City 1200 PKWY	S. Egret Bay 2000 Blvd	
S6	S8	

NO.	DATE	REVISION	APPROVED

Emily Moran, PE, PTOE

STATE OF TEXAS
EMILY F. MORAN
138135
LICENSED
PROFESSIONAL ENGINEER

7/27/2023

Texas Department of Transportation
©2023

JONES|CARTER
Texas Board of Professional Engineers Registration No. F-23290
4350 Lockhill Selma Rd, Suite 100 • San Antonio, Texas 78249 • 210.494.5511

FM 270 AT SH 96 EXISTING SIGNAL CONDITION LAYOUT

SHEET 04 OF 27

DRAWN	FED. RD. DIV. NO.	FEDERAL AID PROJECT NO.		HIGHWAY NO.
LM	06			FM 270, ETC
DESIGNED	STATE	DIST.	COUNTY	SHEET NO.
EM	TEXAS	HOUSTON	GALVESTON	270
CHECKED	CONT.	SECT.	JOB	
GP	0912	73	215	
APPROVED				
DD				

PLOTDRIVER: LCBF.plt.cfg
PENTABLE: LCBF.tbl
DATE: 7/27/2023 4:51:00 PM USER: EFM
FILE: c:\bms\pwe101-01\emily.moran\dms22654\LCBF_INT_04.2.dgn

0' 10' 20' 40'

PROPOSED PED PUSH BUTTONS

PB1, PB4, PB5, PB7

PB2, PB3, PB6, PB8

LEGEND

- RIGHT OF WAY
- EXISTING GROUND MOUNTED SIGN
- EXISTING MAST ARM POLE
- EXISTING PEDESTRIAN POLE
- EXISTING LUMINAIRE
- EXISTING TRAFFIC SIGNAL HEAD
- EXISTING PEDESTRIAN SIGNAL HEAD
- EXISTING PEDESTRIAN PUSH BUTTON
- EXISTING MAST ARM SIGN
- EXISTING RADAR DETECTION
- EXISTING CONTROLLER W/CABINET
- EXISTING GROUND BOX
- EXISTING SERVICE POLE
- EXISTING ANTENNA
- DIRECTION OF FLOW
- PROPOSED PEDESTRIAN SIGNAL HEAD
- PROPOSED PEDESTRIAN PUSH BUTTON
- PROPOSED TRAFFIC SIGNAL CONDUIT
- PROPOSED PEDESTRIAN POLE

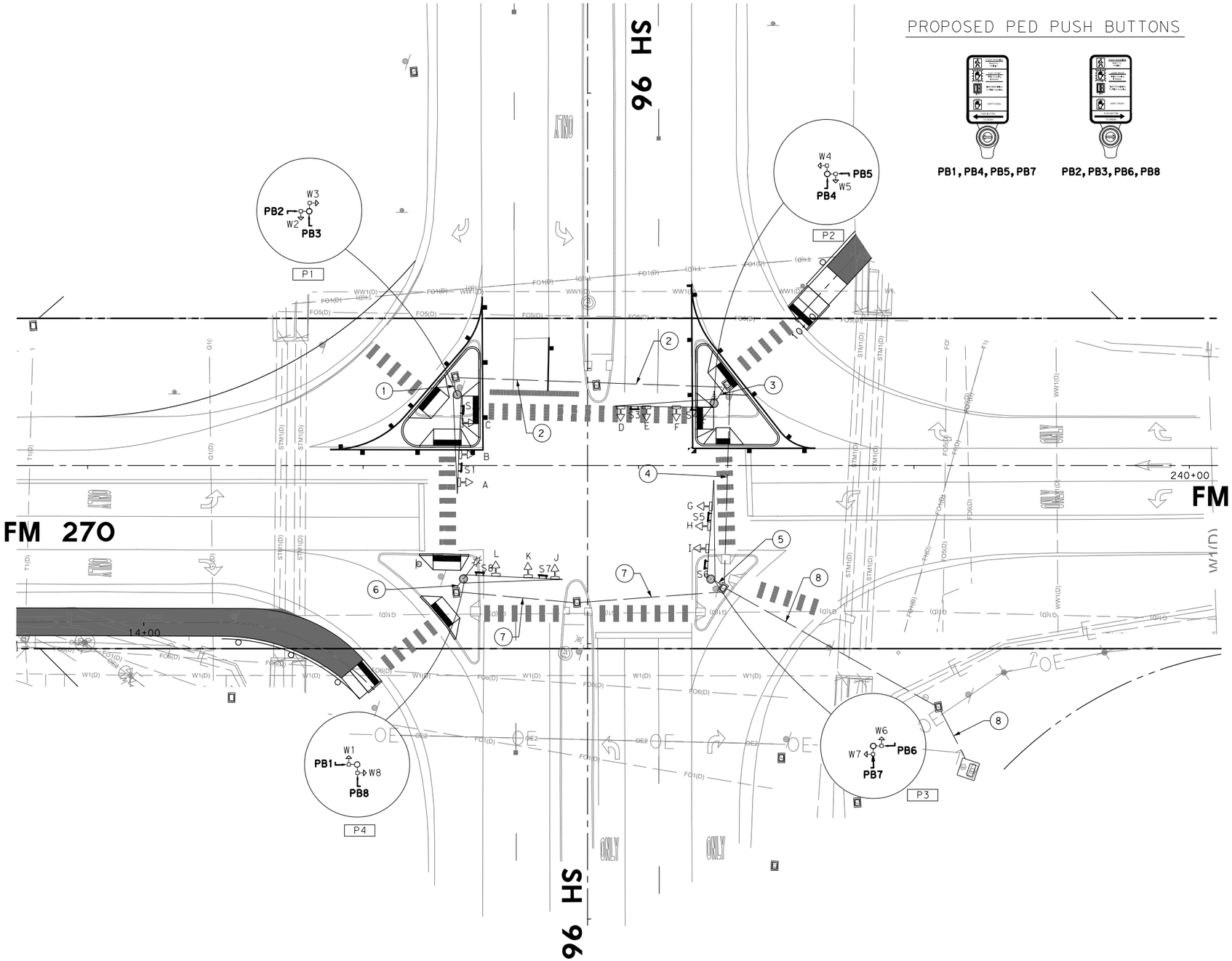

NO.	DATE	REVISION	APPROVED

Emily Moran, PE, PTOE

STATE OF TEXAS
EMILY F. MORAN
138135
LICENSED
PROFESSIONAL ENGINEER

7/27/2023

Texas Department of Transportation
©2023

JONES|CARTER
Texas Board of Professional Engineers Registration No. F-23290
4350 Lockhill Selma Rd, Suite 100 • San Antonio, Texas 78249 • 210.494.5511

FM 270 AT SH 96 PROPOSED SIGNAL CONDITION LAYOUT

(1 OF 2)

SHEET 05 OF 27

DRAWN	FED.RD. DIV.NO.	FEDERAL AID PROJECT NO.		HIGHWAY NO.
LM	06			FM 270, ETC
DESIGNED	STATE	DIST.	COUNTY	SHEET NO.
EM	TEXAS	HOUSTON	GALVESTON	271
CHECKED	CONT.	SECT.	JOB	
GP	0912	73	215	
APPROVED				
DD				

EXISTING/PROP SIGNAL POLE CHART		
POLE NO.	**DESCRIPTION**	**STA, OFFSET**
P1	EXIST MAST ARM POLE WITH EXIST PEDESTRIAN SIGNALS (2 EA), PROP PUSH BUTTON (2 EA), PROP PEDESTRIAN SIGN (2 EA)	–
P2	EXIST MAST ARM POLE WITH EXIST PEDESTRIAN SIGNALS (2 EA), PROP PUSH BUTTON (2 EA), PROP PEDESTRIAN SIGN (2 EA), EXIST LUMINAIRE	–
P3	EXIST MAST ARM POLE WITH EXIST PEDESTRIAN SIGNALS (2 EA), PROP PUSH BUTTON (2 EA), PROP PEDESTRIAN SIGN (2 EA)	–
P4	EXIST MAST ARM POLE WITH EXIST PEDESTRIAN SIGNALS (2 EA), PROP PUSH BUTTON (2 EA), PROP PEDESTRIAN SIGN (2 EA), EXIST LUMINAIRE	–

ELECTRICAL SCHEDULE									
ITEM	**DESCRIPTION**	**1**	**2**	**3**	**4**	**5**	**6**	**7**	**8**
PEDESTRIAN PUSH BUTTONS	2/C- #12 AWG	2	2	2	4	2	2	2	8
CONDUIT	EXISTING	X	X	X	X	X	X	X	X

NO.	DATE	REVISION	APPROVED

Emily Moran, PE, PTOE

STATE OF TEXAS
EMILY F. MORAN
138135
LICENSED PROFESSIONAL ENGINEER

7/27/2023

Texas Department of Transportation
©2023

JONES|CARTER
Texas Board of Professional Engineers Registration No. F-23290
4350 Lockhill Selma Rd, Suite 100• San Antonio, Texas 78249 •210.494.5511

FM 270 AT SH 96
PROPOSED SIGNAL CONDITION LAYOUT
(2 OF 2)

SHEET **06** OF **27**

DRAWN	FED. RD. DIV. NO.	FEDERAL AID PROJECT NO.		HIGHWAY NO.
LM	06			FM 270, ETC
DESIGNED	STATE	DIST.	COUNTY	SHEET NO.
EM	TEXAS	HOUSTON	GALVESTON	272
CHECKED	CONT.	SECT.	JOB	
GP	0912	73	215	
APPROVED				
DD				

PLOTDRIVER: LCBF.pltcfg
PENTABLE: LCBF.tbl
DATE: 7/27/2023 4:51:02 PM USER: EFM
FILE: c:\bms\pwe101-01\emily.moran\dms22654\LCBF_INT_04.3.dgn

PENTABLE: LCBF.tbl
PLOTDRIVER: LCBF.pltcfg
DATE: 7/27/2023 4:51:04 PM USER: EFM
FILE: c:\bms\pwe101-01\emily.moran\dms22654\LCBF_INT_05.1.dgn

0' 10' 20' 40'

EXISTING POLE MOUNTED SIGNS TO REMAIN

Louisiana 1400 Ave — S1	League City 1700 PKWY — S2
Louisiana 1500 Ave — S3	League City 1600 PKWY — S4

LEFT TURN YIELD ON FLASHING YELLOW ARROW — S5, S6

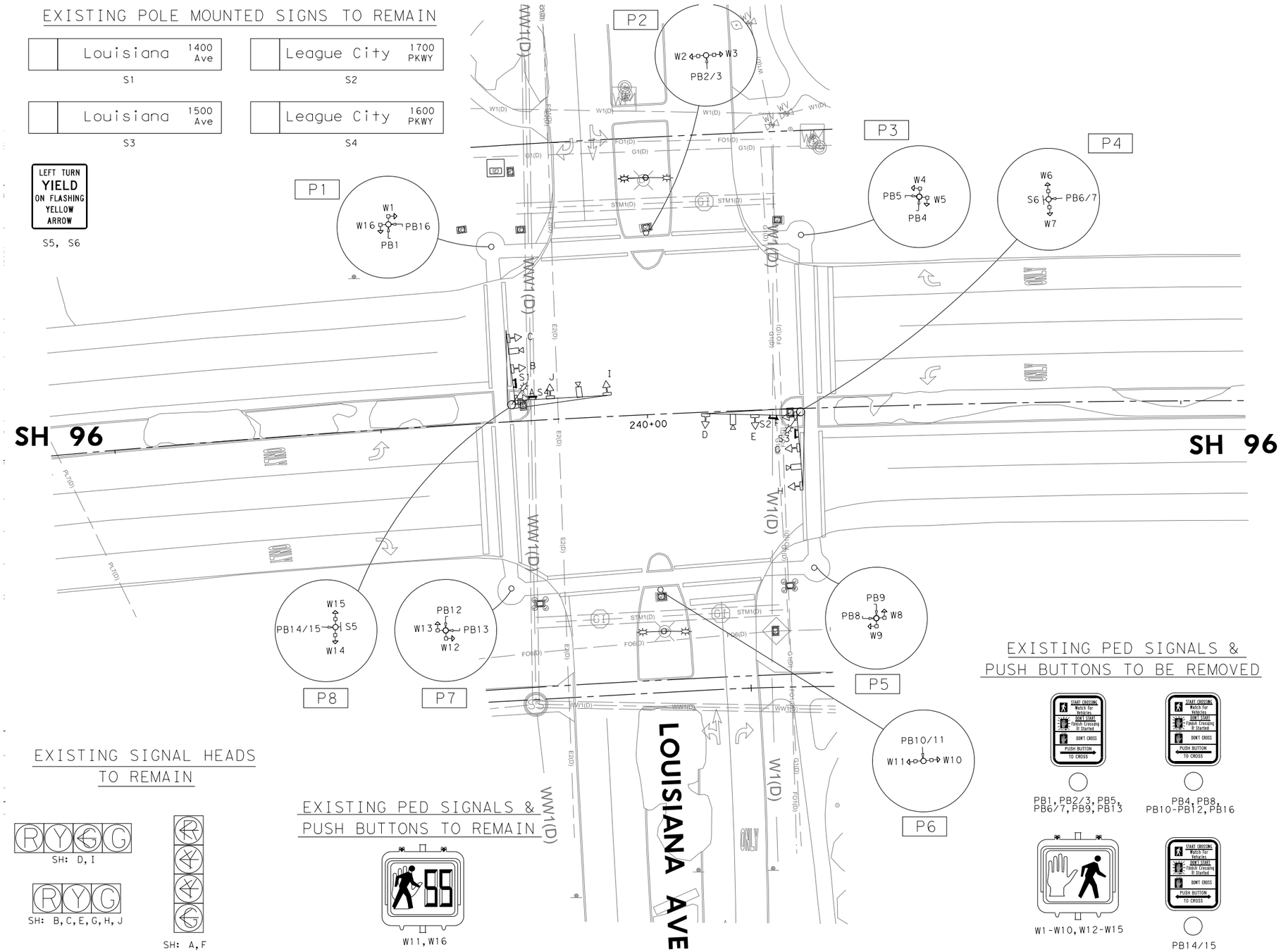

EXISTING SIGNAL HEADS TO REMAIN

SH: D, I

SH: B, C, E, G, H, J

SH: A, F

EXISTING PED SIGNALS & PUSH BUTTONS TO REMAIN

W11, W16

EXISTING PED SIGNALS & PUSH BUTTONS TO BE REMOVED

PB1, PB2/3, PB5, PB6/7, PB9, PB13

PB4, PB8, PB10-PB12, PB16

W1-W10, W12-W15

PB14/15

LEGEND

- RIGHT OF WAY
- EXISTING GROUND MOUNTED SIGN
- EXISTING MAST ARM POLE
- EXISTING PEDESTRIAN POLE
- EXISTING LUMINAIRE
- EXISTING TRAFFIC SIGNAL HEAD
- EXISTING PEDESTRIAN SIGNAL HEAD
- EXISTING PEDESTRIAN PUSH BUTTON
- EXISTING MAST ARM SIGN
- EXISTING RADAR DETECTION
- EXISTING CONTROLLER W/CABINET
- EXISTING GROUND BOX
- EXISTING SERVICE POLE
- EXISTING ANTENNA
- DIRECTION OF FLOW

N

NO.	DATE	REVISION	APPROVED

Emily Moran, PE, PTOE

STATE OF TEXAS — EMILY F. MORAN — 138135 — LICENSED PROFESSIONAL ENGINEER

7/27/2023

Texas Department of Transportation ©2023

JONES|CARTER
Texas Board of Professional Engineers Registration No. F-23290
4350 Lockhill Selma Rd, Suite 100 • San Antonio, Texas 78249 • 210.494.5511

SH 96 AT LOUISIANA AVE EXISTING SIGNAL CONDITION LAYOUT

SHEET 07 OF 27

DRAWN	FED.RD. DIV.NO.	FEDERAL AID PROJECT NO.		HIGHWAY NO.
LM	06			FM 270, ETC
DESIGNED	STATE	DIST.	COUNTY	SHEET NO.
EM	TEXAS	HOUSTON	GALVESTON	273
CHECKED	CONT.	SECT.	JOB	
GP	0912	73	215	
APPROVED				
DD				

PENTABLE:LCBF.tbl

PLOTDRIVER:LCBF.pltcfg

DATE:7/27/2023 4:51:06 PM USER:EFM

FILE:c:\bms\pwe101-01\emily.moran\dms22654\LCBF_INT_05.2.dgn

PROPOSED PED SIGNALS & PUSH BUTTONS

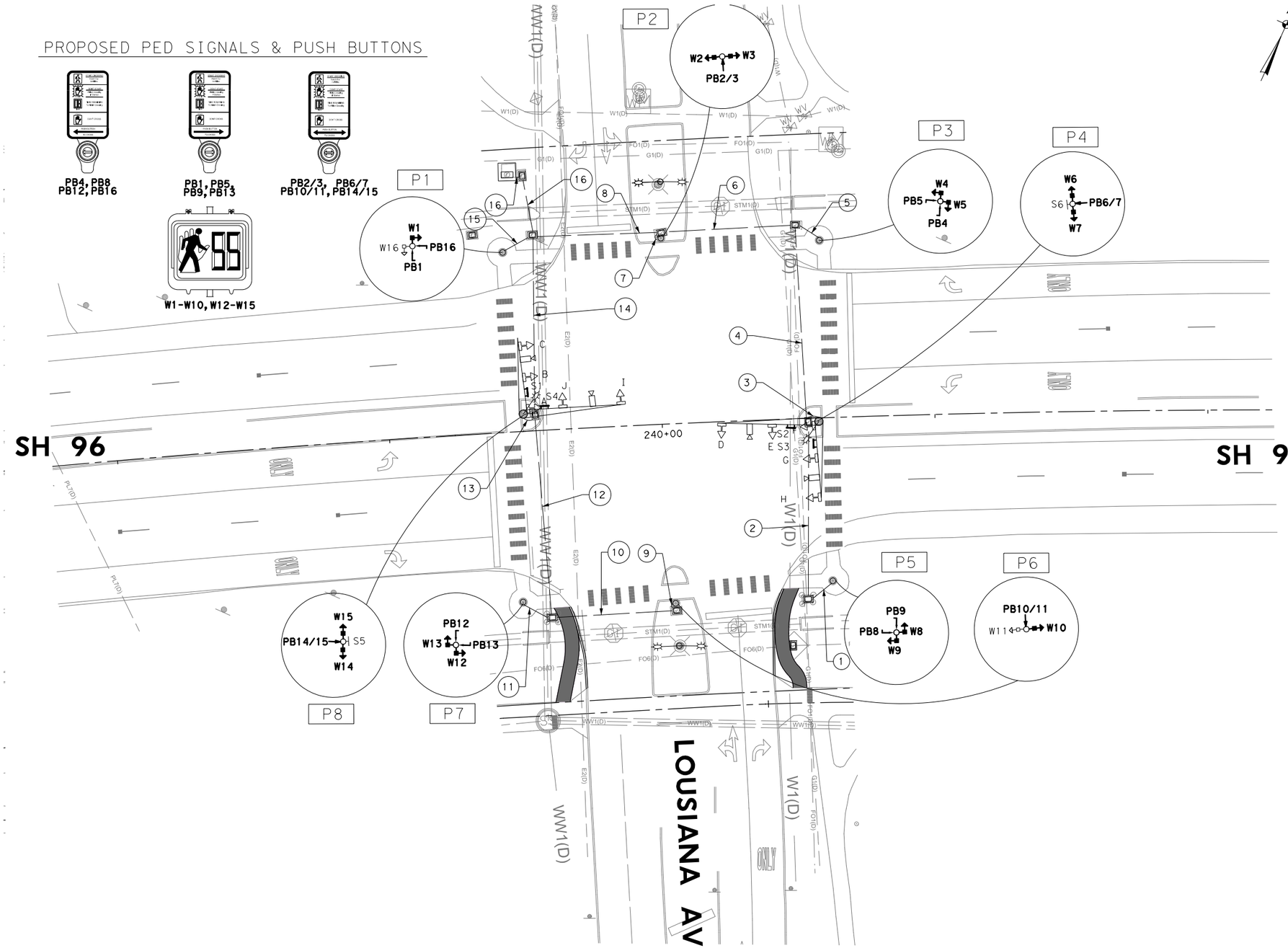

0' 10' 20' 40'

LEGEND

- RIGHT OF WAY
- EXISTING GROUND MOUNTED SIGN
- EXISTING MAST ARM POLE
- EXISTING PEDESTRIAN POLE
- EXISTING LUMINAIRE
- EXISTING TRAFFIC SIGNAL HEAD
- EXISTING PEDESTRIAN SIGNAL HEAD
- EXISTING PEDESTRIAN PUSH BUTTON
- EXISTING MAST ARM SIGN
- EXISTING RADAR DETECTION
- EXISTING CONTROLLER W/CABINET
- EXISTING GROUND BOX
- EXISTING SERVICE POLE
- EXISTING ANTENNA
- DIRECTION OF FLOW
- PROPOSED PEDESTRIAN SIGNAL HEAD
- PROPOSED PEDESTRIAN PUSH BUTTON
- PROPOSED TRAFFIC SIGNAL CONDUIT
- PROPOSED PEDESTRIAN POLE

NO.	DATE	REVISION	APPROVED

Emily Moran, PE, PTOE

STATE OF TEXAS
EMILY F. MORAN
138135
LICENSED PROFESSIONAL ENGINEER

7/27/2023

Texas Department of Transportation
©2023

JONES|CARTER
Texas Board of Professional Engineers Registration No. F-23290
4350 Lockhill Selma Rd, Suite 100 • San Antonio, Texas 78249 • 210.494.5511

SH 96 AT LOUISIANA AVE PROPOSED SIGNAL CONDITION LAYOUT

(1 OF 2)

SHEET **08** OF **27**

DRAWN	FED.RD. DIV.NO.	FEDERAL AID PROJECT NO.		HIGHWAY NO.
LM	06			FM 270, ETC
DESIGNED	STATE	DIST.	COUNTY	SHEET NO.
EM	TEXAS	HOUSTON	GALVESTON	274
CHECKED	CONT.	SECT.	JOB	
GP	0912	73	215	
APPROVED				
DD				

EXISTING/PROP SIGNAL POLE CHART		
POLE NO.	**DESCRIPTION**	**STA, OFFSET**
P1	EXIST PEDESTRIAN POLE WITH EXIST PEDESTRIAN SIGNAL (1 EA), PROP PEDESTRIAN SIGNAL (1 EA), PROP PUSH BUTTON (2 EA), PROP PEDESTRIAN SIGN (2 EA)	–
P2	EXIST PEDESTRIAN POLE WITH PROP PEDESTRIAN SIGNAL (2 EA), PROP PUSH BUTTON (1 EA), PROP PEDESTRIAN SIGN (1 EA)	–
P3	EXIST PEDESTRIAN POLE WITH PROP PEDESTRIAN SIGNAL (2 EA), PROP PUSH BUTTON (2 EA), PROP PEDESTRIAN SIGN (2 EA)	–
P4	EXIST DUAL MAST ARM POLE WITH EXIST TRAFFIC SIGNAL (1 EA), PROP PEDESTRIAN SIGNAL (2 EA), PROP PUSH BUTTON (1 EA), PROP PEDESTRIAN SIGN (1 EA), EXIST LUMINAIRE, EXIST VEHICLE SIGN (1 EA)	–
P5	EXIST PEDESTRIAN POLE WITH PROP PEDESTRIAN SIGNAL (2 EA), PROP PUSH BUTTON (2 EA), PROP PEDESTRIAN SIGN (2 EA)	–
P6	EXIST PEDESTRIAN POLE WITH EXIST PEDESTRIAN SIGNAL (1 EA), PROP PEDESTRIAN SIGNAL (1 EA), PROP PUSH BUTTON (1 EA), PROP PEDESTRIAN SIGN (1 EA)	–
P7	EXIST PEDESTRIAN POLE WITH PROP PEDESTRIAN SIGNAL (2 EA), PROP PUSH BUTTON (2 EA), PROP PEDESTRIAN SIGN (2 EA)	–
P8	EXIST DUAL MAST ARM POLE WITH EXIST TRAFFIC SIGNAL (1 EA), PROP PEDESTRIAN SIGNAL (2 EA), PROP PUSH BUTTON (1 EA), PROP PEDESTRIAN SIGN (1 EA), EXIST LUMINAIRE, EXIST VEHICLE SIGN (1 EA)	–

ELECTRICAL SCHEDULE																	
ITEM	**DESCRIPTION**	**1**	**2**	**3**	**4**	**5**	**6**	**7**	**8**	**9**	**10**	**11**	**12**	**13**	**14**	**15**	**16**
PEDESTRIAN PUSH BUTTONS	2/C- #12 AWG	2	2	1	3	2	5	1	6	1	1	2	3	1	4	2	12
PEDESTRIAN SIGNALS	4/C- #12 AWG	2	2	2	4	2	6	2	8	1	1	2	3	2	5	1	14
CONDUIT	EXISTING	X	X	X	X	X	X	X	X	X	X	X	X	X	X	X	X

NO.	DATE	REVISION	APPROVED

Emily Moran, PE, PTOE

STATE OF TEXAS
EMILY F. MORAN
138135
LICENSED
PROFESSIONAL ENGINEER

7/27/2023

Texas Department of Transportation
©2023

JONES|CARTER
Texas Board of Professional Engineers Registration No. F-23290
4350 Lockhill Selma Rd, Suite 100 • San Antonio, Texas 78249 • 210.494.5511

SH 96 AT LOUISIANA AVE PROPOSED SIGNAL CONDITION LAYOUT

(2 OF 2)

SHEET **09** OF **27**

DRAWN	FED.RD. DIV.NO.	FEDERAL AID PROJECT NO.		HIGHWAY NO.
LM	06			FM 270, ETC
DESIGNED	STATE	DIST.	COUNTY	SHEET NO.
EM	TEXAS	HOUSTON	GALVESTON	275
CHECKED	CONT.	SECT.	JOB	
GP	0912	73	215	
APPROVED				
DD				

PENTABLE: LCBF.tbl
PLOTDRIVER: LCBF.pltcfg
DATE: 7/27/2023 4:51:07 PM USER: EFM
FILE: c:\bms\pwe101-01\emily.moran\dms22654\LCBF_INT_05.3.dgn

PENTABLE: LCBF.tbl
PLOTDRIVER: LCBF.pltcfg
USER: EFM
4:51:09 PM
DATE: 7/27/2023
FILE: c:\bms\pwe101-01\emily.moran\dms22654\LCBF_INT_06.1.dgn

0' 10' 20' 40'

EXISTING PED SIGNALS & PUSH BUTTONS TO BE REMOVED

PUSH BUTTON FOR

PB2, PB4, PB6, PB8

PUSH BUTTON FOR

PB1, PB3, PB5, PB7

EXISTING SIGNAL HEADS TO REMAIN

R Y G

SH: A, F

R Y G

SH: D, I

R Y G

SH: B, C, E, G, H, J

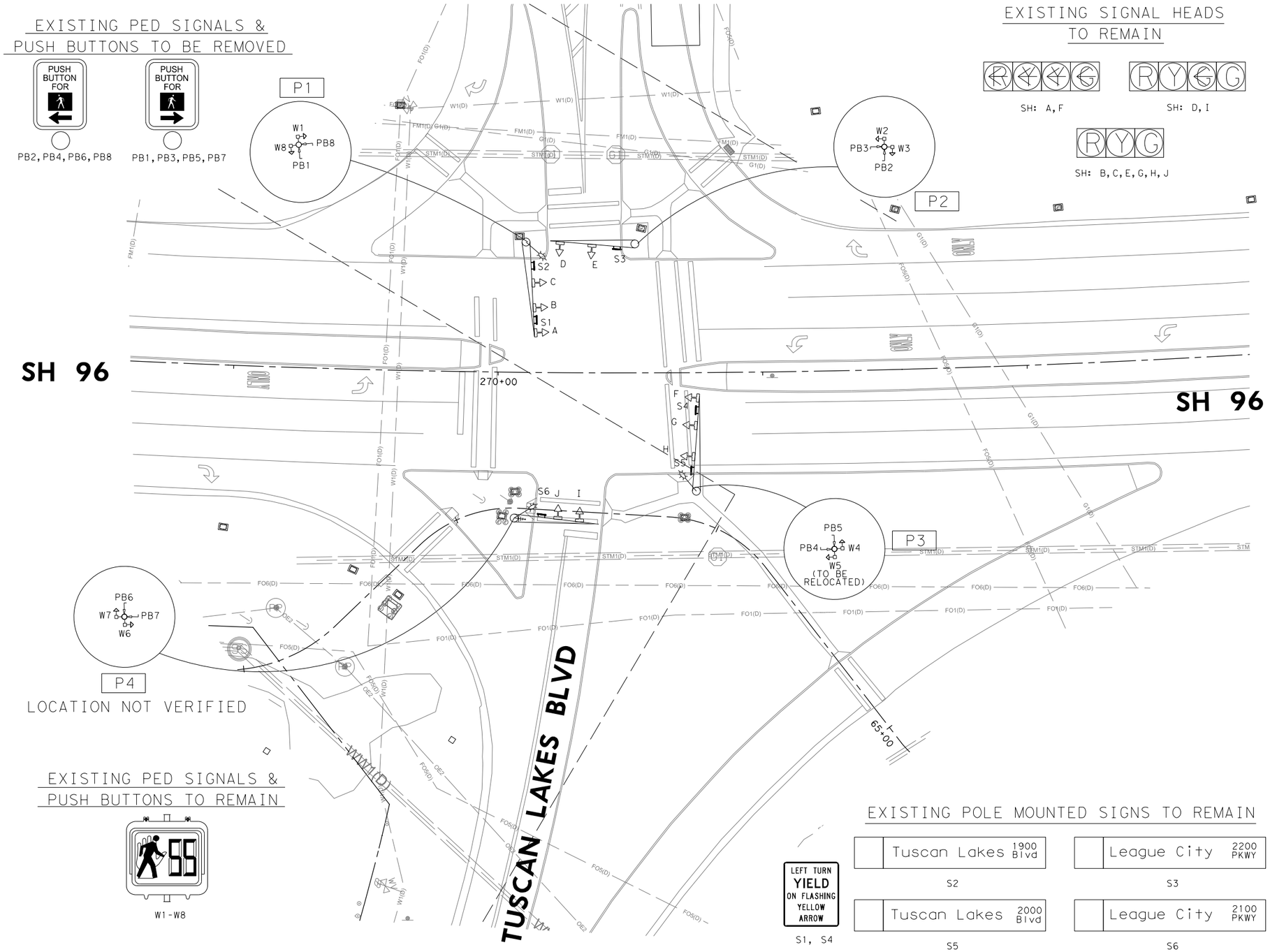

LEGEND

- RIGHT OF WAY
- EXISTING GROUND MOUNTED SIGN
- EXISTING MAST ARM POLE
- EXISTING PEDESTRIAN POLE
- EXISTING LUMINAIRE
- EXISTING TRAFFIC SIGNAL HEAD
- EXISTING PEDESTRIAN SIGNAL HEAD
- EXISTING PEDESTRIAN PUSH BUTTON
- EXISTING MAST ARM SIGN
- EXISTING RADAR DETECTION
- EXISTING CONTROLLER W/CABINET
- EXISTING GROUND BOX
- EXISTING SERVICE POLE
- EXISTING ANTENNA
- DIRECTION OF FLOW

EXISTING PED SIGNALS & PUSH BUTTONS TO REMAIN

W1-W8

LOCATION NOT VERIFIED

LEFT TURN YIELD ON FLASHING YELLOW ARROW

S1, S4

EXISTING POLE MOUNTED SIGNS TO REMAIN

	Tuscan Lakes 1900 Blvd	League City 2200 PKWY
S2		S3
	Tuscan Lakes 2000 Blvd	League City 2100 PKWY
S5		S6

NO.	DATE	REVISION	APPROVED

Emily Moran, PE, PTOE

STATE OF TEXAS
EMILY F. MORAN
138135
LICENSED PROFESSIONAL ENGINEER

7/27/2023

Texas Department of Transportation
©2023

JONES|CARTER
Texas Board of Professional Engineers Registration No. F-23290
4350 Lockhill Selma Rd, Suite 100 • San Antonio, Texas 78249 • 210.494.5511

SH 96 AT TUSCAN LAKES EXISTING SIGNAL CONDITION LAYOUT

SHEET 10 OF 27

DRAWN	FED.RD. DIV.NO.	FEDERAL AID PROJECT NO.		HIGHWAY NO.
LM	06			FM 270, ETC
DESIGNED	STATE	DIST.	COUNTY	SHEET NO.
EM	TEXAS	HOUSTON	GALVESTON	276
CHECKED	CONT.	SECT.	JOB	
GP	0912	73	215	
APPROVED				
DD				

PROPOSED PED PUSH BUTTONS

PB2, PB4, PB6, PB8

PB1, PB3, PB5, PB7

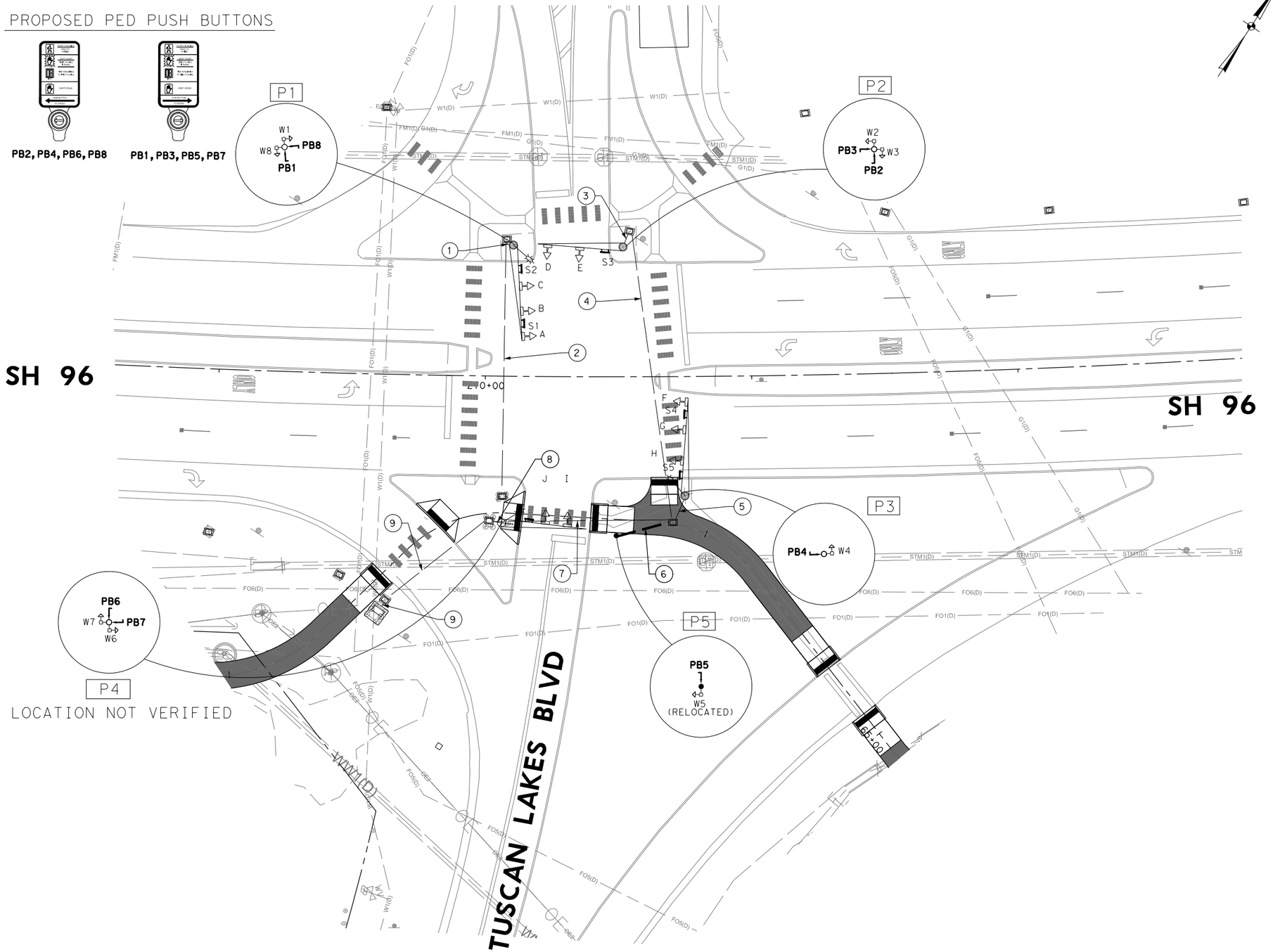

0' 10' 20' 40'

LEGEND

- RIGHT OF WAY
- EXISTING GROUND MOUNTED SIGN
- EXISTING MAST ARM POLE
- EXISTING PEDESTRIAN POLE
- EXISTING LUMINAIRE
- EXISTING TRAFFIC SIGNAL HEAD
- EXISTING PEDESTRIAN SIGNAL HEAD
- EXISTING PEDESTRIAN PUSH BUTTON
- EXISTING MAST ARM SIGN
- EXISTING RADAR DETECTION
- EXISTING CONTROLLER W/CABINET
- EXISTING GROUND BOX
- EXISTING SERVICE POLE
- EXISTING ANTENNA
- DIRECTION OF FLOW
- PROPOSED PEDESTRIAN SIGNAL HEAD
- PROPOSED PEDESTRIAN PUSH BUTTON
- PROPOSED TRAFFIC SIGNAL CONDUIT
- PROPOSED PEDESTRIAN POLE

NO.	DATE	REVISION	APPROVED

Emily Moran, PE, PTOE

STATE OF TEXAS
EMILY F. MORAN
138135
LICENSED
PROFESSIONAL ENGINEER

7/27/2023

Texas Department of Transportation
©2023

JONES|CARTER
Texas Board of Professional Engineers Registration No. F-23290
4350 Lockhill Selma Rd, Suite 100• San Antonio, Texas 78249 •210.494.5511

SH 96 AT TUSCAN LAKES PROPOSED SIGNAL CONDITION LAYOUT

(1 OF 2)

SHEET 11 OF 27

DRAWN	FED.RD. DIV.NO.	FEDERAL AID PROJECT NO.		HIGHWAY NO.
LM	06			FM 270, ETC
DESIGNED	STATE	DIST.	COUNTY	SHEET NO.
EM	TEXAS	HOUSTON	GALVESTON	277
CHECKED	CONT.	SECT.	JOB	
GP	0912	73	215	
APPROVED				
DD				

DATE:7/27/2023 4:51:11 PM USER:EFM
FILE:c:\bms\pwe101-01\emily.moran\dms22654\LCBF_INT_06.2.dgn
PLOTDRIVER:LCBF.pltcfg PENTABLE:LCBF.tbl

EXISTING/PROP SIGNAL POLE CHART		
POLE NO.	**DESCRIPTION**	**STA, OFFSET**
P1	EXIST MAST ARM POLE WITH EXIST PEDESTRIAN SIGNAL (2 EA), PROP PUSH BUTTON (2 EA), PROP PEDESTRIAN SIGN (2 EA), EXIST LUMINAIRE	–
P2	EXIST MAST ARM POLE WITH EXIST PEDESTRIAN SIGNAL (2 EA), PROP PUSH BUTTON (2 EA), PROP PEDESTRIAN SIGN (2 EA)	–
P3	EXIST MAST ARM POLE WITH EXIST PEDESTRIAN SIGNAL (1 EA), PROP PUSH BUTTON (1 EA), PROP PEDESTRIAN SIGN (1 EA), EXIST LUMINAIRE	–
P4	EXIST MAST ARM POLE WITH EXIST PEDESTRIAN SIGNAL (2 EA), PROP PUSH BUTTON (2 EA), PROP PEDESTRIAN SIGN (2 EA), EXIST LUMINAIRE	–
P5	PROP PEDESTRIAN POLE WITH EXIST PEDESTRIAN SIGNAL (1 EA) (RELOCATED FROM P3), PROP BUSH BUTTON (1 EA), PROP PEDESTRIAN SIGN (1 EA)	63+70, 6' RT

NOTE: THE STATION AND OFFSET ARE REFERENCED TO ℄ SH 96 SHARED PATH

ELECTRICAL SCHEDULE										
ITEM	**DESCRIPTION**	**1**	**2**	**3**	**4**	**5**	**6**	**7**	**8**	**9**
GROUND (FOR CONDUITS)	1/C- #6 BARE						1			
PEDESTRIAN PUSH BUTTONS	2/C- #12 AWG	2	2	2	2	1	1	4	2	8
PEDESTRIAN SIGNALS	4/C- #12 AWG						1	1		1
CONDUIT	EXISTING	X	X	X	X	X		X	X	X
	3" PVC (SCHD. 80)						1			

NO.	DATE	REVISION	APPROVED

Emily Moran, PE, PTOE

STATE OF TEXAS
EMILY F. MORAN
138135
LICENSED
PROFESSIONAL ENGINEER

7/27/2023

Texas Department of Transportation
©2023

JONES|CARTER
Texas Board of Professional Engineers Registration No. F-23290
4350 Lockhill Selma Rd, Suite 100 • San Antonio, Texas 78249 • 210.494.5511

SH 96 AT TUSCAN LAKES PROPOSED SIGNAL CONDITION LAYOUT

(2 OF 2)

SHEET **12** OF **27**

DRAWN	FED. RD. DIV. NO.	FEDERAL AID PROJECT NO.		HIGHWAY NO.
LM	06			FM 270, ETC
DESIGNED	STATE	DIST.	COUNTY	SHEET NO.
EM	TEXAS	HOUSTON	GALVESTON	278
CHECKED	CONT.	SECT.	JOB	
GP	0912	73	215	
APPROVED				
DD				

PLOTDRIVER: LCBF.pltcfg
PENTABLE: LCBF.tbl
DATE: 7/27/2023 4:51:12 PM USER: EFM
FILE: c:\bms\pwe101-01\emily.moran\dms22654\LCBF_INT_06.3.dgn

PLOTDRIVER: LCBF.plt.cfg
PENTABLE: LCBF.tbl
DATE: 7/27/2023 4:51:14 PM USER: EFM
FILE: c:\bms\pwe101-01\emily.moran\dms22654\LCBF_INT_07.1.dgn

0' 10' 20' 40'

EXISTING SIGNAL HEADS TO REMAIN

SH: M

SH: A, B, E, F, I, J

SH: C, D, G, H, K, L, N

SH: O

EXISTING POLE MOUNTED SIGNS TO REMAIN

S3

S1: South Shore Blvd 6500

S5: League City Pkwy 2500

S4: South Shore Blvd 6600

S2: League City Pkwy 2600

LEGEND

- RIGHT OF WAY
- EXISTING GROUND MOUNTED SIGN
- EXISTING MAST ARM POLE
- EXISTING PEDESTRIAN POLE
- EXISTING LUMINAIRE
- EXISTING TRAFFIC SIGNAL HEAD
- EXISTING PEDESTRIAN SIGNAL HEAD
- EXISTING PEDESTRIAN PUSH BUTTON
- EXISTING MAST ARM SIGN
- EXISTING RADAR DETECTION
- EXISTING CONTROLLER W/CABINET
- EXISTING GROUND BOX
- EXISTING SERVICE POLE
- EXISTING ANTENNA
- DIRECTION OF FLOW

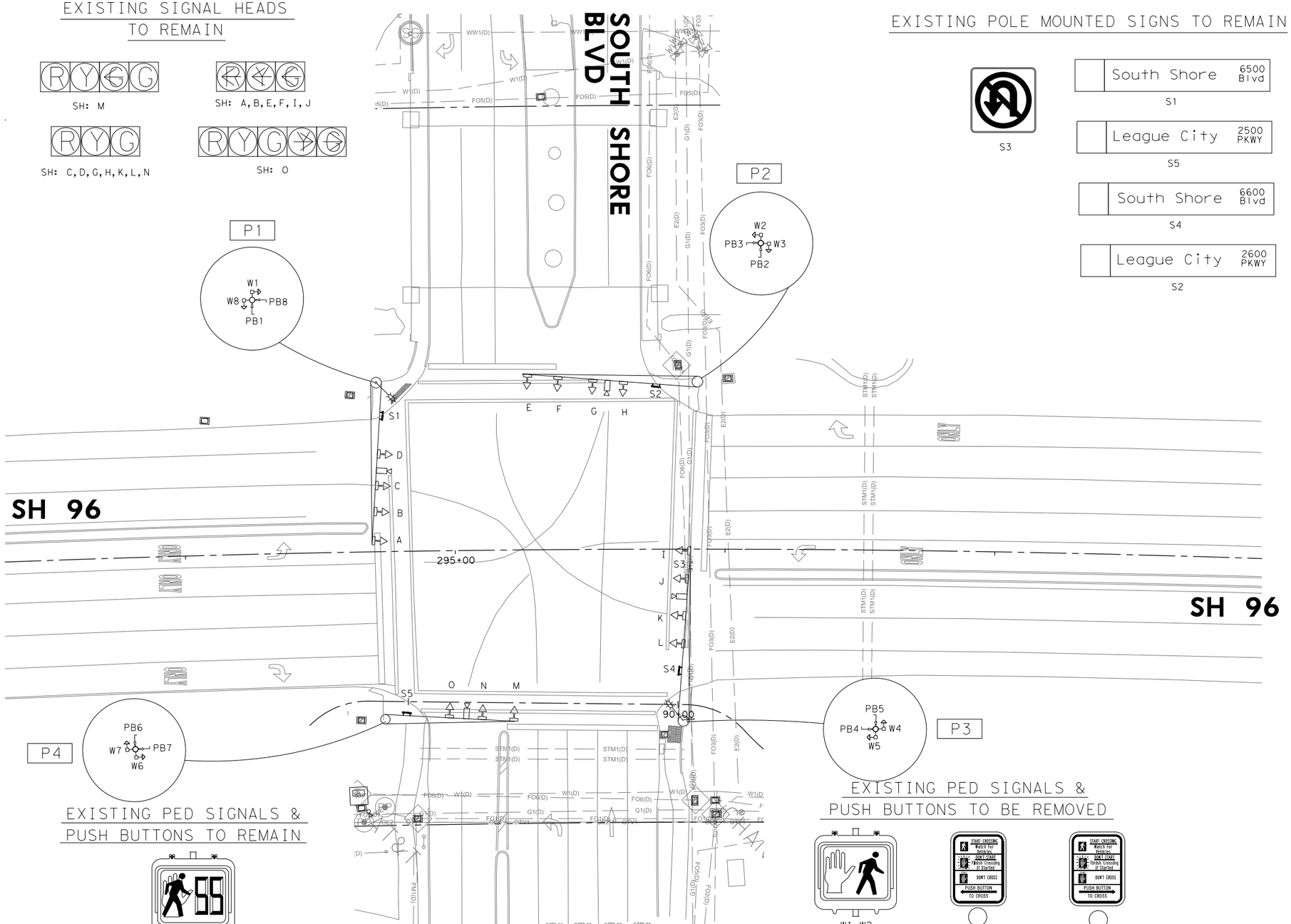

EXISTING PED SIGNALS & PUSH BUTTONS TO REMAIN

W3-W8

EXISTING PED SIGNALS & PUSH BUTTONS TO BE REMOVED

W1, W2

PB2, PB4, PB6, PB8

PB1, PB3, PB5, PB7

NO.	DATE	REVISION	APPROVED

Emily Moran, PE, PTOE

STATE OF TEXAS
EMILY F. MORAN
138135
LICENSED PROFESSIONAL ENGINEER

7/27/2023

Texas Department of Transportation
©2023

JONES|CARTER
Texas Board of Professional Engineers Registration No. F-23290
4350 Lockhill Selma Rd, Suite 100 • San Antonio, Texas 78249 • 210.494.5511

SH 96 AT SOUTH SHORE EXISTING SIGNAL CONDITION LAYOUT

SHEET 13 OF 27

DRAWN	FED. RD. DIV. NO.	FEDERAL AID PROJECT NO.		HIGHWAY NO.
LM	06			FM 270, ETC
DESIGNED	STATE	DIST.	COUNTY	SHEET NO.
EM	TEXAS	HOUSTON	GALVESTON	279
CHECKED	CONT.	SECT.	JOB	
GP	0912	73	215	
APPROVED				
DD				

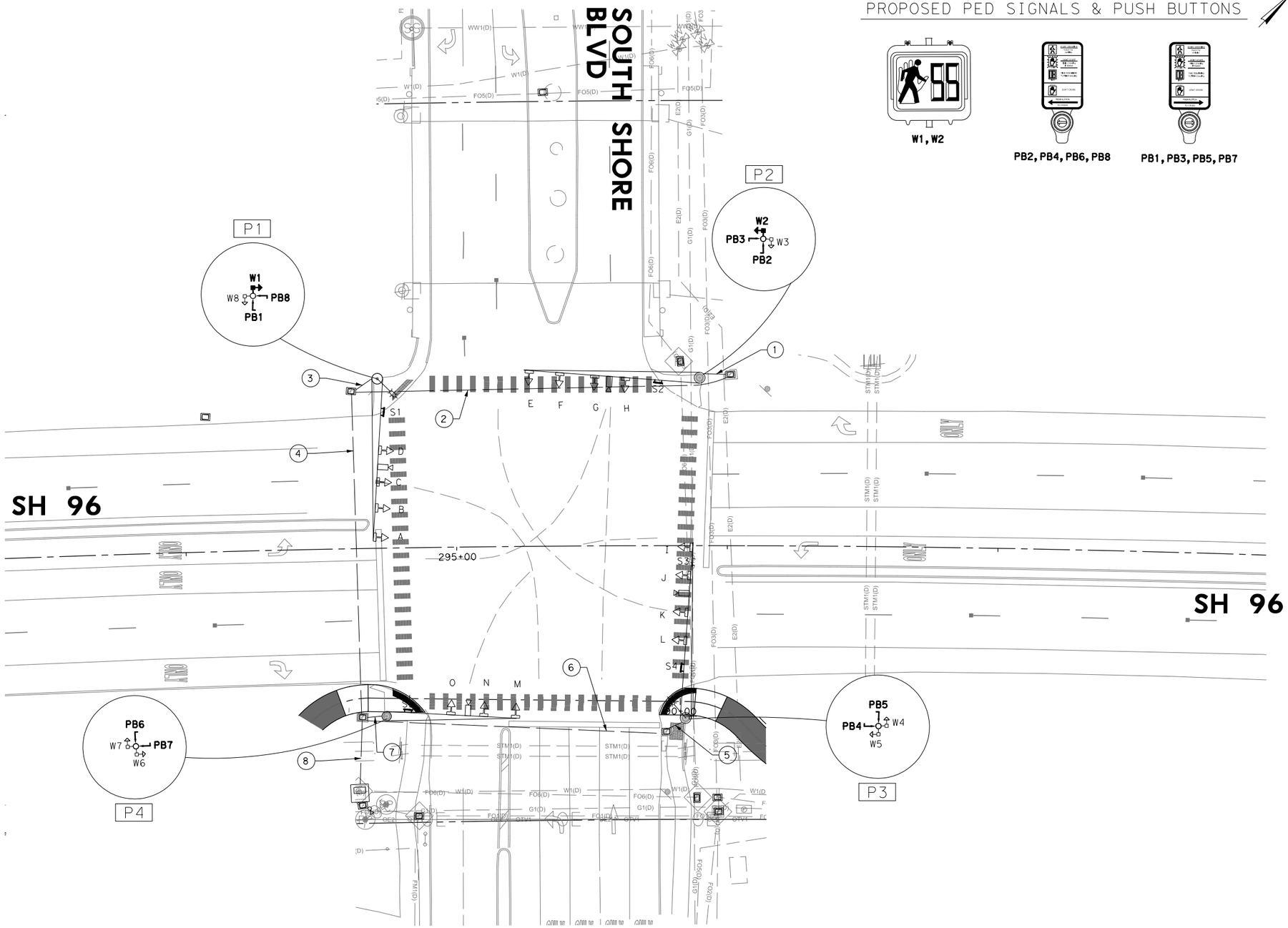

PROPOSED PED SIGNALS & PUSH BUTTONS

W1, W2

PB2, PB4, PB6, PB8

PB1, PB3, PB5, PB7

0' 10' 20' 40'

LEGEND

- RIGHT OF WAY
- EXISTING GROUND MOUNTED SIGN
- EXISTING MAST ARM POLE
- EXISTING PEDESTRIAN POLE
- EXISTING LUMINAIRE
- EXISTING TRAFFIC SIGNAL HEAD
- EXISTING PEDESTRIAN SIGNAL HEAD
- EXISTING PEDESTRIAN PUSH BUTTON
- EXISTING MAST ARM SIGN
- EXISTING RADAR DETECTION
- EXISTING CONTROLLER W/CABINET
- EXISTING GROUND BOX
- EXISTING SERVICE POLE
- EXISTING ANTENNA
- DIRECTION OF FLOW
- PROPOSED PEDESTRIAN SIGNAL HEAD
- PROPOSED PEDESTRIAN PUSH BUTTON
- PROPOSED TRAFFIC SIGNAL CONDUIT
- PROPOSED PEDESTRIAN POLE

NO.	DATE	REVISION	APPROVED

Emily Moran, PE, PTOE

STATE OF TEXAS
EMILY F. MORAN
138135
LICENSED PROFESSIONAL ENGINEER

7/27/2023

Texas Department of Transportation
©2023

JONES|CARTER
Texas Board of Professional Engineers Registration No. F-23290
4350 Lockhill Selma Rd, Suite 100 • San Antonio, Texas 78249 • 210.494.5511

SH 96 AT SOUTH SHORE PROPOSED SIGNAL CONDITION LAYOUT

(1 OF 2)

SHEET 14 OF 27

DRAWN	FED.RD. DIV.NO.	FEDERAL AID PROJECT NO.		HIGHWAY NO.
LM	06			FM 270, ETC
DESIGNED	STATE	DIST.	COUNTY	SHEET NO.
EM	TEXAS	HOUSTON	GALVESTON	
CHECKED	CONT.	SECT.	JOB	280
GP	0912	73	215	
APPROVED				
DD				

PLOTDRIVER: LCBF.plt.cfg PENTABLE: LCBF.tbl
DATE: 7/27/2023 4:51:17 PM USER: EFM
FILE: c:\bms\pwe101-01\emily.moran\dms22654\LCBF_INT_07.2.dgn

EXISTING/PROP SIGNAL POLE CHART		
POLE NO.	**DESCRIPTION**	**STA, OFFSET**
P1	EXIST MAST ARM POLE WITH EXIST PEDESTRIAN SIGNAL (1 EA), PROP PEDESTRIAN SIGNAL (1 EA), PROP PUSH BUTTON (2 EA), PROP PEDESTRIAN SIGN (2 EA), EXIST LUMINAIRE	–
P2	EXIST MAST ARM POLE WITH EXIST PEDESTRIAN SIGNAL (1 EA), PROP PEDESTRIAN SIGNAL (1 EA), PROP PUSH BUTTON (2 EA), PROP PEDESTRIAN SIGN (2 EA)	–
P3	EXIST MAST ARM POLE WITH EXIST PEDESTRIAN SIGNAL (2 EA), PROP PUSH BUTTON (2 EA), PROP PEDESTRIAN SIGN (2 EA), EXIST LUMINAIRE	–
P4	EXIST MAST ARM POLE WITH EXIST PEDESTRIAN SIGNAL (2 EA), PROP PUSH BUTTON (2 EA), PROP PEDESTRIAN SIGN (2 EA)	–

ELECTRICAL SCHEDULE									
ITEM	**DESCRIPTION**	**1**	**2**	**3**	**4**	**5**	**6**	**7**	**8**
PEDESTRIAN PUSH BUTTONS	2/C- #12 AWG	2	2	2	4	2	2	2	8
PEDESTRIAN SIGNALS	4/C- #12 AWG	1	1	1	2				2
CONDUIT	EXISTING	X	X	X	X	X	X	X	X

NO.	DATE	REVISION	APPROVED

Emily Moran, PE, PTOE

STATE OF TEXAS
EMILY F. MORAN
138135
LICENSED
PROFESSIONAL ENGINEER

7/27/2023

Texas Department of Transportation
©2023

JONES|CARTER
Texas Board of Professional Engineers Registration No. F-23290
4350 Lockhill Selma Rd, Suite 100 • San Antonio, Texas 78249 • 210.494.5511

SH 96 AT SOUTH SHORE
PROPOSED SIGNAL
CONDITION LAYOUT
(2 OF 2)

SHEET **15** OF **27**

DRAWN	FED. RD. DIV. NO.	FEDERAL AID PROJECT NO.		HIGHWAY NO.
LM	06			FM 270, ETC
DESIGNED	STATE	DIST.	COUNTY	SHEET NO.
EM	TEXAS	HOUSTON	GALVESTON	281
CHECKED	CONT.	SECT.	JOB	
GP	0912	73	215	
APPROVED				
DD				

PLOTDRIVER: LCBF.pltcfg
PENTABLE: LCBF.tbl
DATE: 7/27/2023 4:51:18 PM USER: EFM
FILE: c:\bms\pwe101-01\emily.moran\dms22654\LCBF_INT_07.3.dgn

PLOTDRIVER: LCBF.pltcfg
PENTABLE: LCBF.tbl
DATE: 7/27/2023 4:51:21 PM USER: EFM
FILE: c:\bms\pwe101-01\emily.moran\dms22654\LCBF_INT_08.1.dgn

0' 10' 20' 40'

EXISTING POLE MOUNTED SIGNS TO REMAIN

League City Parkway
S3, S6

⇦ Bay Ridge DR
Columbia Memoral HWY ⇨
S2

⇦ Columbia Memoral HWY
Bay Ridge DR ⇨
S5

LEFT TURN
YIELD
ON FLASHING
YELLOW
ARROW
S1, S4

EXISTING SIGNAL HEADS TO REMAIN

SH: D, J

SH: B, C, E, F, H, I, K, L

SH: A, G

LEGEND

- RIGHT OF WAY
- EXISTING GROUND MOUNTED SIGN
- EXISTING MAST ARM POLE
- EXISTING PEDESTRIAN POLE
- EXISTING LUMINAIRE
- EXISTING TRAFFIC SIGNAL HEAD
- EXISTING PEDESTRIAN SIGNAL HEAD
- EXISTING PEDESTRIAN PUSH BUTTON
- EXISTING MAST ARM SIGN
- EXISTING RADAR DETECTION
- EXISTING CONTROLLER W/CABINET
- EXISTING GROUND BOX
- EXISTING SERVICE POLE
- EXISTING ANTENNA
- DIRECTION OF FLOW

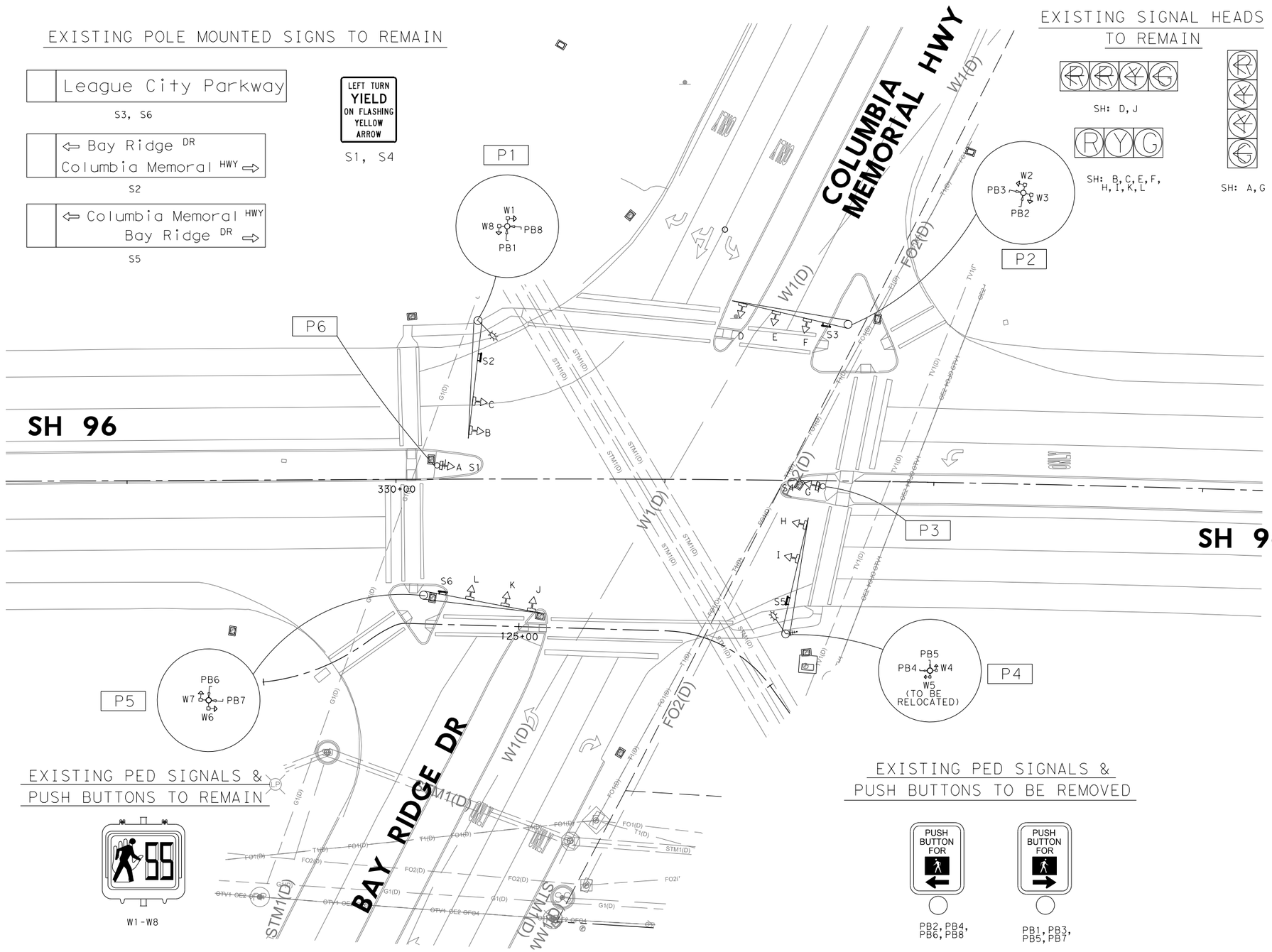

EXISTING PED SIGNALS & PUSH BUTTONS TO REMAIN

W1-W8

EXISTING PED SIGNALS & PUSH BUTTONS TO BE REMOVED

PUSH BUTTON FOR
PB2, PB4, PB6, PB8

PUSH BUTTON FOR
PB1, PB3, PB5, PB7

NO.	DATE	REVISION	APPROVED

Emily Moran, PE, PTOE

STATE OF TEXAS
EMILY F. MORAN
138135
LICENSED
PROFESSIONAL ENGINEER

7/27/2023

Texas Department of Transportation
©2023

JONES|CARTER
Texas Board of Professional Engineers Registration No. F-23290
4350 Lockhill Selma Rd, Suite 100 • San Antonio, Texas 78249 • 210.494.5511

SH 96 AT BAY RIDGE DR EXISTING SIGNAL CONDITION LAYOUT

SHEET 16 OF 27

DRAWN	FED.RD. DIV.NO.	FEDERAL AID PROJECT NO.		HIGHWAY NO.
LM	06			FM 270, ETC
DESIGNED	STATE	DIST.	COUNTY	SHEET NO.
EM	TEXAS	HOUSTON	GALVESTON	282
CHECKED	CONT.	SECT.	JOB	
GP	0912	73	215	
APPROVED				
DD				

PENTABLE: LCBF.tbl

PLOTDRIVER: LCBF.pltcfg

DATE: 7/27/2023 4:51:24 PM USER: EFM

FILE: c:\bms\pwe101-01\emily.moran\dms22654\LCBF_INT_08.2.dgn

PROPOSED PED PUSH BUTTONS

PB2, PB4, PB7, PB8

PB1, PB3, PB5, PB6

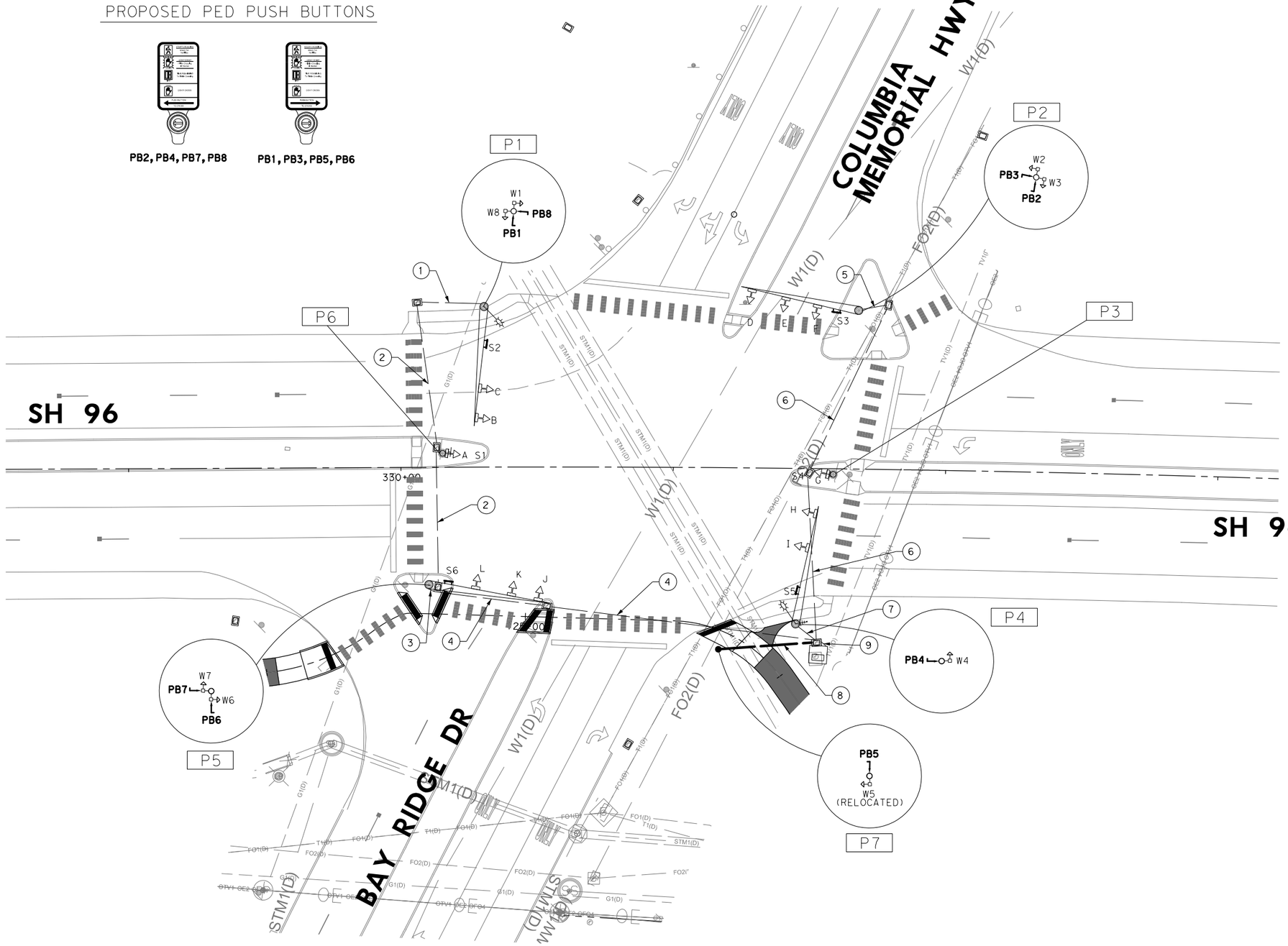

0' 10' 20' 40'

LEGEND

- RIGHT OF WAY
- EXISTING GROUND MOUNTED SIGN
- EXISTING MAST ARM POLE
- EXISTING PEDESTRIAN POLE
- EXISTING LUMINAIRE
- EXISTING TRAFFIC SIGNAL HEAD
- EXISTING PEDESTRIAN SIGNAL HEAD
- EXISTING PEDESTRIAN PUSH BUTTON
- EXISTING MAST ARM SIGN
- EXISTING RADAR DETECTION
- EXISTING CONTROLLER W/CABINET
- EXISTING GROUND BOX
- EXISTING SERVICE POLE
- EXISTING ANTENNA
- DIRECTION OF FLOW
- PROPOSED PEDESTRIAN SIGNAL HEAD
- PROPOSED PEDESTRIAN PUSH BUTTON
- PROPOSED TRAFFIC SIGNAL CONDUIT
- PROPOSED PEDESTRIAN POLE

NO.	DATE	REVISION	APPROVED

Emily Moran, PE, PTOE

STATE OF TEXAS
EMILY F. MORAN
138135
LICENSED
PROFESSIONAL ENGINEER

7/27/2023

Texas Department of Transportation

©2023

JONES|CARTER

Texas Board of Professional Engineers Registration No. F-23290
4350 Lockhill Selma Rd, Suite 100 • San Antonio, Texas 78249 • 210.494.5511

SH 96 AT BAY RIDGE DR PROPOSED SIGNAL CONDITION LAYOUT

(1 OF 2)

SHEET 17 OF 27

DRAWN	FED. RD. DIV. NO.	FEDERAL AID PROJECT NO.		HIGHWAY NO.
LM	06			FM 270, ETC
DESIGNED	STATE	DIST.	COUNTY	SHEET NO.
EM	TEXAS	HOUSTON	GALVESTON	283
CHECKED	CONT.	SECT.	JOB	
GP	0912	73	215	
APPROVED				
DD				

EXISTING/PROP SIGNAL POLE CHART		
POLE NO.	**DESCRIPTION**	**STA, OFFSET**
P1	EXIST MAST ARM POLE WITH EXIST PEDESTRIAN SIGNAL (2 EA), PROP PED PUSH BUTTON (2 EA), PROP PEDESTRIAN SIGN (2 EA), EXIST LUMINAIRE	–
P2	EXIST MAST ARM POLE WITH EXIST PEDESTRIAN SIGNAL (2 EA), PROP PED PUSH BUTTON (2 EA), PROP PEDESTRIAN SIGN (2 EA)	–
P3	EXIST SIGNAL POLE WITH TRAFFIC SIGNAL (1 EA), EXIST VEHICLE SIGN (1 EA)	–
P4	EXIST MAST ARM POLE WITH EXIST PEDESTRIAN SIGNAL (1 EA), PROP PED PUSH BUTTON (1 EA), PROP PEDESTRIAN SIGN (1 EA), EXIST LUMINAIRE	–
P5	EXIST MAST ARM POLE WITH EXIST PEDESTRIAN SIGNAL (2 EA), PROP PED PUSH BUTTON (2 EA), PROP PEDESTRIAN SIGN (2 EA)	–
P6	EXIST SIGNAL POLE WITH TRAFFIC SIGNAL (1 EA), EXIST VEHICLE SIGN (1 EA)	–
P7	PROP PEDESTRIAN POLE WITH EXIST PEDESTRIAN SIGNAL (1 EA) (RELOCATED FROM P4), PROP PED PUSH BUTTON (1 EA), PROP PEDESTRIAN SIGN (1 EA)	125+79, 7' RT

NOTE: THE STATION AND OFFSET ARE REFERENCED TO ℄ SH 96 SHARED PATH

ELECTRICAL SCHEDULE										
ITEM	**DESCRIPTION**	**1**	**2**	**3**	**4**	**5**	**6**	**7**	**8**	**9**
GROUND (FOR CONDUITS)	1/C- #6 BARE								1	
PEDESTRIAN PUSH BUTTONS	2/C- #12 AWG	2	2	2	4	2	2	1	1	8
PEDESTRIAN SIGNALS	4/C- #12 AWG								1	1
CONDUIT	EXISTING	X	X	X	X	X	X	X		X
	2" PVC (SCHD. 80)								1	

NO.	DATE	REVISION	APPROVED

Emily Moran, PE, PTOE

STATE OF TEXAS
EMILY F. MORAN
138135
LICENSED
PROFESSIONAL ENGINEER

7/27/2023

Texas Department of Transportation
©2023

JONES|CARTER
Texas Board of Professional Engineers Registration No. F-23290
4350 Lockhill Selma Rd, Suite 100 • San Antonio, Texas 78249 • 210.494.5511

SH 96 AT BAY RIDGE DR PROPOSED SIGNAL CONDITION LAYOUT

(2 OF 2)

SHEET **18** OF **27**

DRAWN	FED.RD. DIV.NO.	FEDERAL AID PROJECT NO.		HIGHWAY NO.
LM	06			FM 270, ETC
DESIGNED	STATE	DIST.	COUNTY	SHEET NO.
EM	TEXAS	HOUSTON	GALVESTON	
CHECKED	CONT.	SECT.	JOB	284
GP	0912	73	215	
APPROVED				
DD				

PLOTDRIVER: LCBF.pltcfg
PENTABLE: LCBF.tbl
DATE: 7/27/2023 4:51:25 PM USER: EFM
FILE: c:\bms\pwe101-01\emily.moran\dms22654\LCBF_INT_08.3.dgn

PLOTDRIVER: LCBF.pltcfg
PENTABLE: LCBF.tbl
DATE: 7/27/2023 4:51:27 PM USER: EFM
FILE: c:\bms\pwe101-01\emily.moran\dms22654\LCBF_INT_09.1.dgn

0' 10' 20' 40'

EXISTING SIGNAL HEADS TO REMAIN

SH: A, F

SH: H

SH: B, C, E, G, J

SH: D, I

LOCATION NOT VERIFIED

EXISTING PED SIGNALS & PUSH BUTTONS TO BE REMOVED

PB1, PB3, PB4, PB6, PB8 PB2, PB5, PB7

LEGEND

- RIGHT OF WAY
- EXISTING GROUND MOUNTED SIGN
- EXISTING MAST ARM POLE
- EXISTING PEDESTRIAN POLE
- EXISTING LUMINAIRE
- EXISTING TRAFFIC SIGNAL HEAD
- EXISTING PEDESTRIAN SIGNAL HEAD
- EXISTING PEDESTRIAN PUSH BUTTON
- EXISTING MAST ARM SIGN
- EXISTING RADAR DETECTION
- EXISTING CONTROLLER W/CABINET
- EXISTING GROUND BOX
- EXISTING SERVICE POLE
- EXISTING ANTENNA
- DIRECTION OF FLOW

P1 PB1 W1 W8 PB8

P2 PB2 PB3 W2 W3

P3 PB5 PB4 W4 W5

P4 PB6 W7 PB7 W6

SH 96

SH 96

LAWRENCE RD

150+00

EXISTING PED SIGNALS & PUSH BUTTONS TO REMAIN

W1-W8

EXISTING POLE MOUNTED SIGNS TO REMAIN

S2: Lawrence 2800 Rd

S7: Lawrence 2900 Rd

S5: League City 3700 PKWY

S8: League City 3800 PKWY

S1, S6: LEFT TURN YIELD ON FLASHING YELLOW ARROW

S3

S4: ONLY ONLY

NO.	DATE	REVISION	APPROVED

Emily Moran, PE, PTOE

STATE OF TEXAS
EMILY F. MORAN
138135
LICENSED PROFESSIONAL ENGINEER

7/27/2023

Texas Department of Transportation
©2023

JONES|CARTER
Texas Board of Professional Engineers Registration No. F-23290
4350 Lockhill Selma Rd, Suite 100 • San Antonio, Texas 78249 • 210.494.5511

SH 96 AT LAWRENCE RD EXISTING SIGNAL CONDITION LAYOUT

SHEET 19 OF 27

DRAWN	FED. RD. DIV. NO.	FEDERAL AID PROJECT NO.		HIGHWAY NO.
LM	06			FM 270, ETC
DESIGNED	STATE	DIST.	COUNTY	SHEET NO.
EM	TEXAS	HOUSTON	GALVESTON	285
CHECKED	CONT.	SECT.	JOB	
GP	0912	73	215	
APPROVED				
DD				

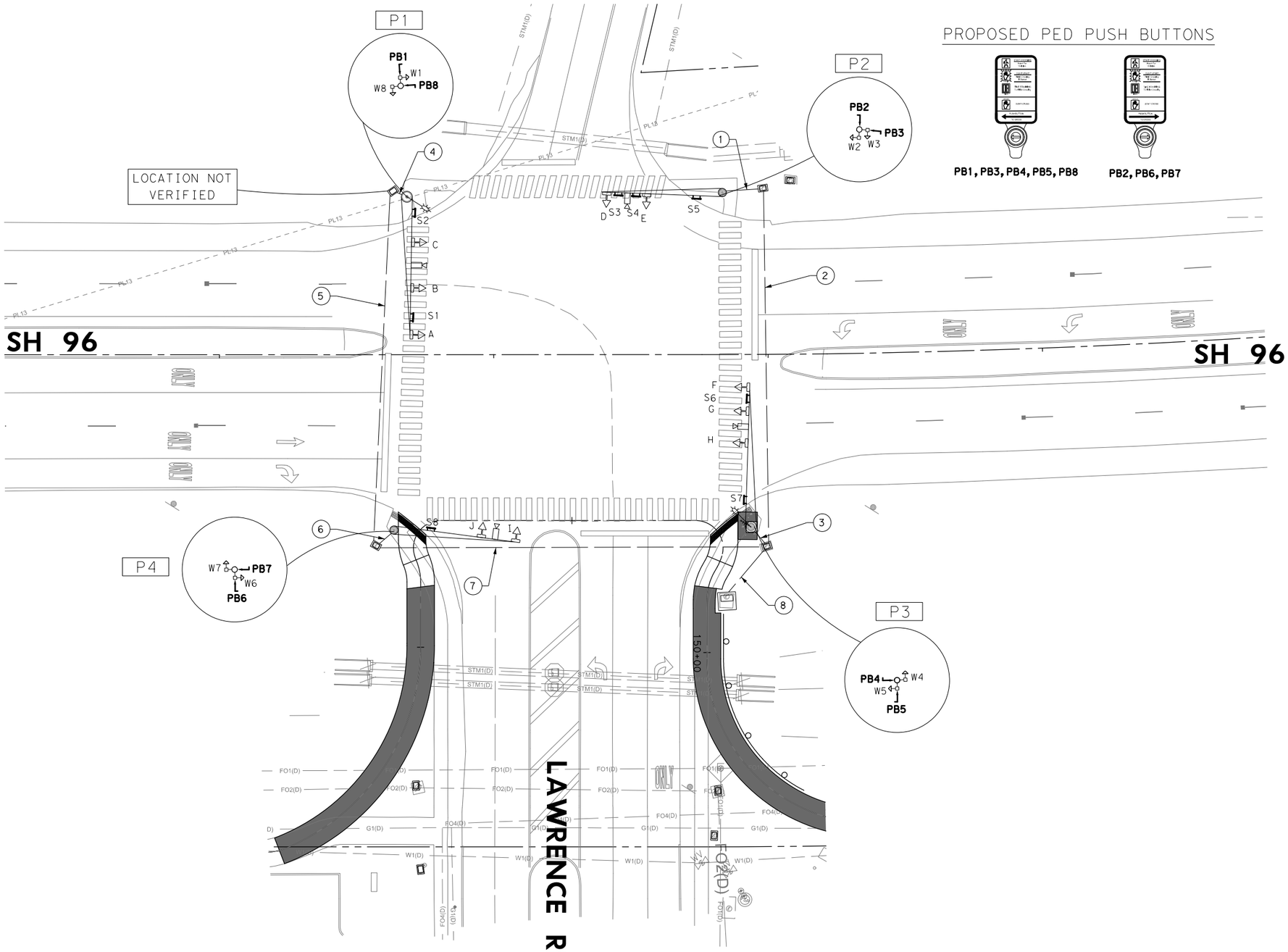

PROPOSED PED PUSH BUTTONS

PB1, PB3, PB4, PB5, PB8

PB2, PB6, PB7

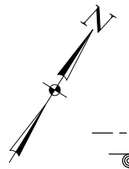

LEGEND

- RIGHT OF WAY
- EXISTING GROUND MOUNTED SIGN
- EXISTING MAST ARM POLE
- EXISTING PEDESTRIAN POLE
- EXISTING LUMINAIRE
- EXISTING TRAFFIC SIGNAL HEAD
- EXISTING PEDESTRIAN SIGNAL HEAD
- EXISTING PEDESTRIAN PUSH BUTTON
- EXISTING MAST ARM SIGN
- EXISTING RADAR DETECTION
- EXISTING CONTROLLER W/CABINET
- EXISTING GROUND BOX
- EXISTING SERVICE POLE
- EXISTING ANTENNA
- DIRECTION OF FLOW
- PROPOSED PEDESTRIAN SIGNAL HEAD
- PROPOSED PEDESTRIAN PUSH BUTTON
- PROPOSED TRAFFIC SIGNAL CONDUIT
- PROPOSED PEDESTRIAN POLE

NO.	DATE	REVISION	APPROVED

Emily Moran, PE, PTOE

STATE OF TEXAS
EMILY F. MORAN
138135
LICENSED
PROFESSIONAL ENGINEER

7/27/2023

Texas Department of Transportation
©2023

JONES|CARTER
Texas Board of Professional Engineers Registration No. F-23290
4350 Lockhill Selma Rd, Suite 100 • San Antonio, Texas 78249 • 210.494.5511

SH 96 AT LAWRENCE RD PROPOSED SIGNAL CONDITION LAYOUT

(1 OF 2)

SHEET **20** OF **27**

DRAWN	FED. RD. DIV. NO.	FEDERAL AID PROJECT NO.		HIGHWAY NO.
LM	06			FM 270, ETC
DESIGNED	STATE	DIST.	COUNTY	SHEET NO.
EM	TEXAS	HOUSTON	GALVESTON	286
CHECKED	CONT.	SECT.	JOB	
GP	0912	73	215	
APPROVED				
DD				

PLOTDRIVER: LCBF.pltcfg PENTABLE: LCBF.tbl

DATE: 7/27/2023 4:51:30 PM USER: EFM
FILE: c:\bms\pwe101-01\emily.moran\dms22654\LCBF_INT_09.2.dgn

EXISTING/PROP SIGNAL POLE CHART		
POLE NO.	**DESCRIPTION**	**STA, OFFSET**
P1	EXIST MAST ARM POLE WITH EXIST PEDESTRIAN SIGNAL (2 EA), PROP PED PUSH BUTTON (2 EA), PROP PEDESTRIAN SIGN (2 EA), EXIST LUMINAIRE	–
P2	EXIST MAST ARM POLE WITH EXIST PEDESTRIAN SIGNAL (2 EA), PROP PED PUSH BUTTON (2 EA), PROP PEDESTRIAN SIGN (2 EA)	–
P3	EXIST MAST ARM POLE WITH EXIST PEDESTRIAN SIGNAL (2 EA), PROP PED PUSH BUTTON (2 EA), PROP PEDESTRIAN SIGN (2 EA), EXIST LUMINAIRE	–
P4	EXIST MAST ARM POLE WITH EXIST PEDESTRIAN SIGNAL (2 EA), PROP PED PUSH BUTTON (2 EA), PROP PEDESTRIAN SIGN (2 EA)	–

ELECTRICAL SCHEDULE									
ITEM	**DESCRIPTION**	**1**	**2**	**3**	**4**	**5**	**6**	**7**	**8**
PEDESTRIAN PUSH BUTTONS	2/C- #12 AWG	2	2	2	2	2	2	4	8
CONDUIT	EXISTING	X	X	X	X	X	X	X	X

NO.	DATE	REVISION	APPROVED

Emily Moran, PE, PTOE

STATE OF TEXAS
EMILY F. MORAN
138135
LICENSED
PROFESSIONAL ENGINEER

7/27/2023

Texas Department of Transportation
©2023

JONES|CARTER
Texas Board of Professional Engineers Registration No. F-23290
4350 Lockhill Selma Rd, Suite 100• San Antonio, Texas 78249 •210.494.5511

SH 96 AT LAWRENCE RD
PROPOSED SIGNAL
CONDITION LAYOUT
(2 OF 2)

SHEET **21** OF **27**

DRAWN	FED. RD. DIV. NO.	FEDERAL AID PROJECT NO.		HIGHWAY NO.
LM	06			FM 270, ETC
DESIGNED	STATE	DIST.	COUNTY	SHEET NO.
EM	TEXAS	HOUSTON	GALVESTON	287
CHECKED	CONT.	SECT.	JOB	
GP	0912	73	215	
APPROVED				
DD				

PENTABLE: LCBF.tbl
PLOTDRIVER: LCBF.pltcfg
DATE: 7/27/2023 4:51:31 PM USER: EFM
FILE: c:\bms\pwe101-01\emily.moran\dms22654\LCBF_INT_09.3.dgn

PLOTDRIVER: LCBF.plt cfg
PENTABLE: LCBF.tbl
DATE: 7/27/2023 4:51:33 PM USER: EFM
FILE: c:\bms\pwe101-01\emily.moran\dms22654\LCBF_INT_10.1.dgn

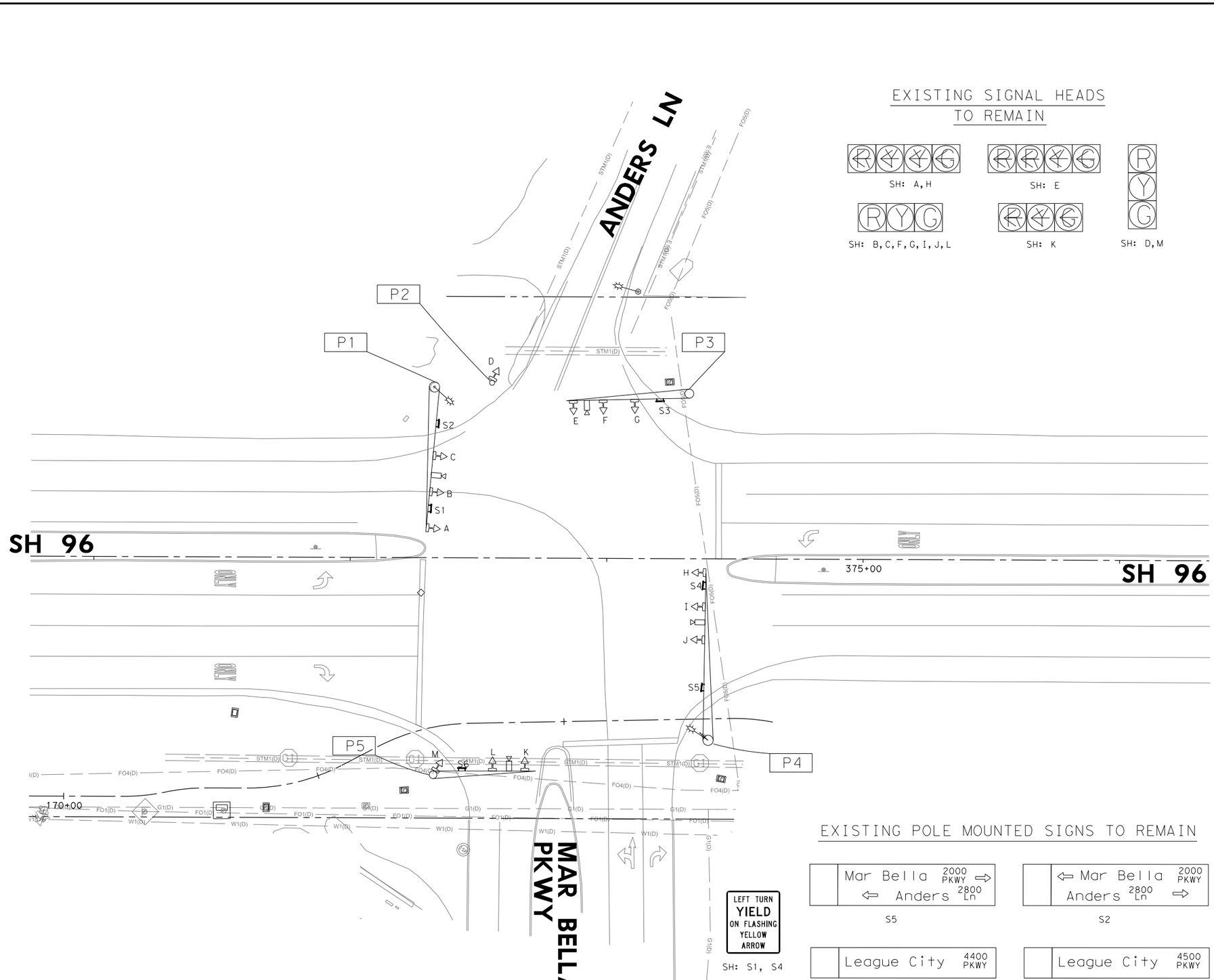

EXISTING SIGNAL HEADS TO REMAIN

LEGEND

- RIGHT OF WAY
- EXISTING GROUND MOUNTED SIGN
- EXISTING MAST ARM POLE
- EXISTING PEDESTRIAN POLE
- EXISTING LUMINAIRE
- EXISTING TRAFFIC SIGNAL HEAD
- EXISTING PEDESTRIAN SIGNAL HEAD
- EXISTING PEDESTRIAN PUSH BUTTON
- EXISTING MAST ARM SIGN
- EXISTING RADAR DETECTION
- EXISTING CONTROLLER W/CABINET
- EXISTING GROUND BOX
- EXISTING SERVICE POLE
- EXISTING ANTENNA
- DIRECTION OF FLOW

0' 10' 20' 40'

LEFT TURN YIELD ON FLASHING YELLOW ARROW

SH: S1, S4

EXISTING POLE MOUNTED SIGNS TO REMAIN

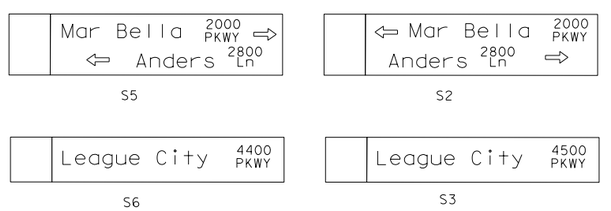

NO.	DATE	REVISION	APPROVED

Emily Moran, PE, PTOE

STATE OF TEXAS
EMILY F. MORAN
138135
LICENSED PROFESSIONAL ENGINEER

7/27/2023

Texas Department of Transportation
©2023

JONES|CARTER
Texas Board of Professional Engineers Registration No. F-23290
4350 Lockhill Selma Rd, Suite 100 • San Antonio, Texas 78249 • 210.494.5511

SH 96 AT MAR BELLA PKWY EXISTING SIGNAL CONDITION LAYOUT

SHEET 22 OF 27

DRAWN	FED. RD. DIV. NO.	FEDERAL AID PROJECT NO.		HIGHWAY NO.
LM	06			FM 270, ETC
DESIGNED	STATE	DIST.	COUNTY	SHEET NO.
EM	TEXAS	HOUSTON	GALVESTON	288
CHECKED	CONT.	SECT.	JOB	
GP	0912	73	215	
APPROVED				
DD				

PLOTDRIVER: LCBF.pltcfg PENTABLE: LCBF.tbl
DATE: 7/27/2023 4:51:36 PM USER: EFM
FILE: c:\bms\pwe101-01\emily.moran\dms22654\LCBF_INT_10.2.dgn

PROPOSED PED SIGNALS & PUSH BUTTONS

PB1, PB2

W1-W2

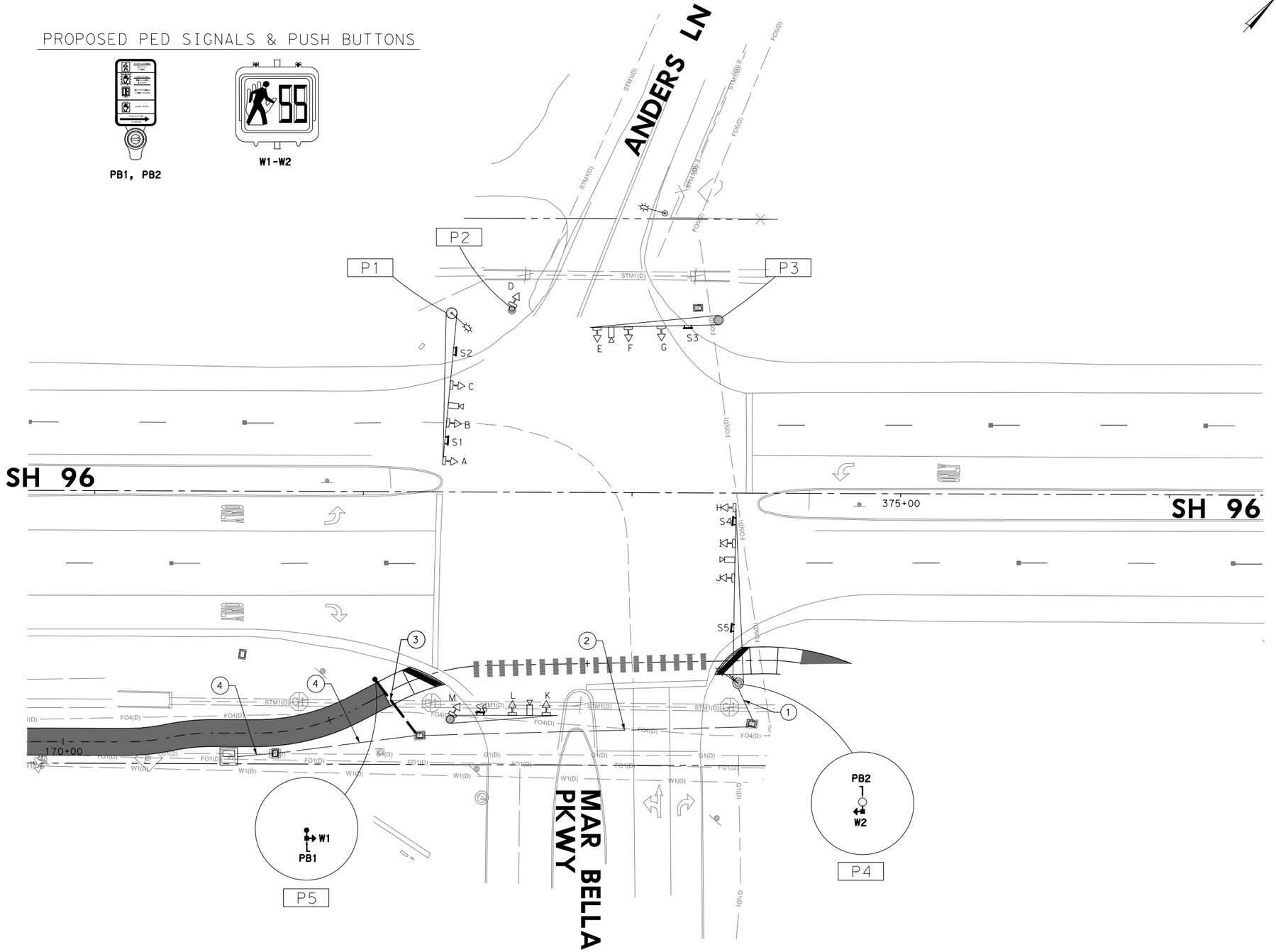

LEGEND

- RIGHT OF WAY
- EXISTING GROUND MOUNTED SIGN
- EXISTING MAST ARM POLE
- EXISTING PEDESTRIAN POLE
- EXISTING LUMINAIRE
- EXISTING TRAFFIC SIGNAL HEAD
- EXISTING PEDESTRIAN SIGNAL HEAD
- EXISTING PEDESTRIAN PUSH BUTTON
- EXISTING MAST ARM SIGN
- EXISTING RADAR DETECTION
- EXISTING CONTROLLER W/CABINET
- EXISTING GROUND BOX
- EXISTING SERVICE POLE
- EXISTING ANTENNA
- DIRECTION OF FLOW
- PROPOSED PEDESTRIAN SIGNAL HEAD
- PROPOSED PEDESTRIAN PUSH BUTTON
- PROPOSED TRAFFIC SIGNAL CONDUIT
- PROPOSED PEDESTRIAN POLE

0' 10' 20' 40'

NO.	DATE	REVISION	APPROVED

Emily Moran, PE, PTOE

STATE OF TEXAS
EMILY F. MORAN
138135
LICENSED PROFESSIONAL ENGINEER

7/27/2023

Texas Department of Transportation
©2023

JONES|CARTER
Texas Board of Professional Engineers Registration No. F-23290
4350 Lockhill Selma Rd, Suite 100 • San Antonio, Texas 78249 • 210.494.5511

SH 96 AT MAR BELLA PKWY PROPOSED SIGNAL CONDITION LAYOUT

(1 OF 2)

SHEET 23 OF 27

DRAWN	FED. RD. DIV. NO.	FEDERAL AID PROJECT NO.		HIGHWAY NO.
LM	06			FM 270, ETC
DESIGNED	STATE	DIST.	COUNTY	SHEET NO.
EM	TEXAS	HOUSTON	GALVESTON	289
CHECKED	CONT.	SECT.	JOB	
GP	0912	73	215	
APPROVED				
DD				

EXISTING/PROP SIGNAL POLE CHART		
POLE NO.	**DESCRIPTION**	**STA, OFFSET**
P1	EXIST MAST ARM POLE WITH EXIST LUMINAIRE	–
P2	EXIST SIGNAL POLE	–
P3	EXIST MAST ARM POLE	–
P4	EXIST MAST ARM POLE WITH PROP PEDESTRIAN SIGNAL (1 EA), PROP PED PUSH BUTTON (1 EA), PROP PEDESTRIAN SIGN (1 EA)	–
P5	PROP PEDESTRIAN POLE WITH PROP PEDESTRIAN SIGNAL (1 EA), PROP PED PUSH BUTTON (1 EA), PROP PEDESTRIAN SIGN (1 EA)	374+05, 70' RT

NOTE: THE STATION AND OFFSET ARE REFERENCED TO ℄ SH 96 SHARED PATH

ELECTRICAL SCHEDULE					
ITEM	**DESCRIPTION**	**1**	**2**	**3**	**4**
GROUND (FOR CONDUIT)	1/C- #6 BARE			1	
PEDESTRIAN PUSH BUTTONS	2/C- #12 AWG	1	1	1	2
PEDESTRIAN SIGNALS	4/C- #12 AWG	1	1	1	2
CONDUIT	EXISTING	X	X		X
	2" PVC (SCHD. 80)			1	

NO.	DATE	REVISION	APPROVED

Emily Moran, PE, PTOE

STATE OF TEXAS
EMILY F. MORAN
138135
LICENSED PROFESSIONAL ENGINEER

7/27/2023

Texas Department of Transportation
©2023

JONES|CARTER
Texas Board of Professional Engineers Registration No. F-23290
4350 Lockhill Selma Rd, Suite 100• San Antonio, Texas 78249 •210.494.5511

SH 96 AT MAR BELLA PKWY
PROPOSED SIGNAL
CONDITION LAYOUT
(2 OF 2)

SHEET **24** OF **27**

DRAWN	FED. RD. DIV. NO.	FEDERAL AID PROJECT NO.		HIGHWAY NO.
LM	06			FM 270, ETC
DESIGNED	STATE	DIST.	COUNTY	SHEET NO.
EM	TEXAS	HOUSTON	GALVESTON	290
CHECKED	CONT.	SECT.	JOB	
GP	0912	73	215	
APPROVED				
DD				

PENTABLE: LCBF.tbl
PLOTDRIVER: LCBF.pltcfg
DATE: 7/27/2023 4:51:38 PM USER: EFM
FILE: c:\bms\pwe101-01\emily.moran\dms22654\LCBF_INT_10.3.dgn

PLOTDRIVER: LCBF.pltcfg
PENTABLE: LCBF.tbl
DATE: 7/27/2023 4:51:40 PM USER: EFM
FILE: c:\bms\pwe101-01\emily.moran\dms22654\LCBF_INT_11.1.dgn

0' 10' 20' 40'

EXISTING SIGNAL HEADS TO REMAIN

EXISTING POLE MOUNTED SIGNS TO REMAIN

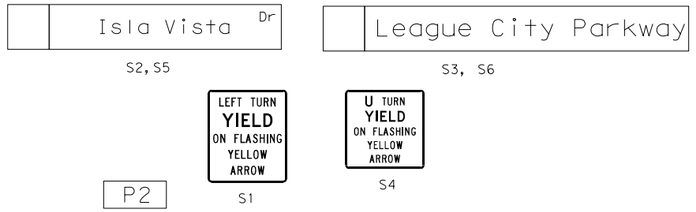

LEGEND

- RIGHT OF WAY
- EXISTING GROUND MOUNTED SIGN
- EXISTING MAST ARM POLE
- EXISTING PEDESTRIAN POLE
- EXISTING LUMINAIRE
- EXISTING TRAFFIC SIGNAL HEAD
- EXISTING PEDESTRIAN SIGNAL HEAD
- EXISTING PEDESTRIAN PUSH BUTTON
- EXISTING MAST ARM SIGN
- EXISTING RADAR DETECTION
- EXISTING CONTROLLER W/CABINET
- EXISTING GROUND BOX
- EXISTING SERVICE POLE
- EXISTING ANTENNA
- DIRECTION OF FLOW

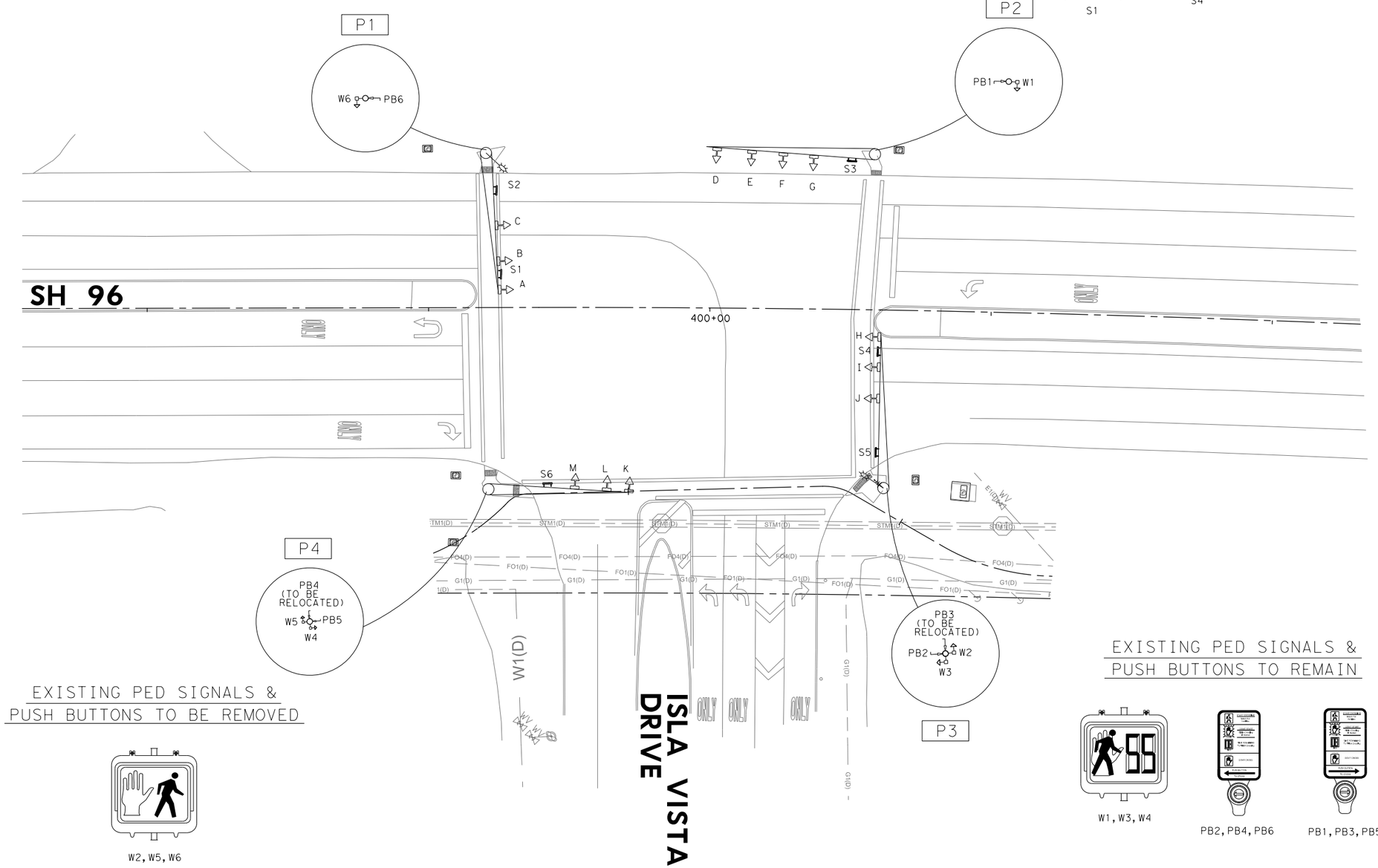

EXISTING PED SIGNALS & PUSH BUTTONS TO BE REMOVED

W2, W5, W6

EXISTING PED SIGNALS & PUSH BUTTONS TO REMAIN

W1, W3, W4

PB2, PB4, PB6

PB1, PB3, PB5

NO.	DATE	REVISION	APPROVED

Emily Moran, PE, PTOE

STATE OF TEXAS
EMILY F. MORAN
138135
LICENSED PROFESSIONAL ENGINEER

7/27/2023

Texas Department of Transportation
©2023

JONES|CARTER
Texas Board of Professional Engineers Registration No. F-23290
4350 Lockhill Selma Rd, Suite 100 • San Antonio, Texas 78249 • 210.494.5511

SH 96 AT ISLA VISTA DR EXISTING SIGNAL CONDITION LAYOUT

SHEET **25** OF **27**

DRAWN	FED. RD. DIV. NO.	FEDERAL AID PROJECT NO.		HIGHWAY NO.
LM	06			FM 270, ETC
DESIGNED	STATE	DIST.	COUNTY	SHEET NO.
EM	TEXAS	HOUSTON	GALVESTON	291
CHECKED	CONT.	SECT.	JOB	
GP	0912	73	215	
APPROVED				
DD				

PENTABLE:LCBF.tbl
PLOTDRIVER:LCBF.pltcfg
DATE:7/27/2023 4:51:43 PM USER:EFM
FILE:c:\bms\pwe101-01\emily.moran\dms22654\LCBF_INT_11.2.dgn

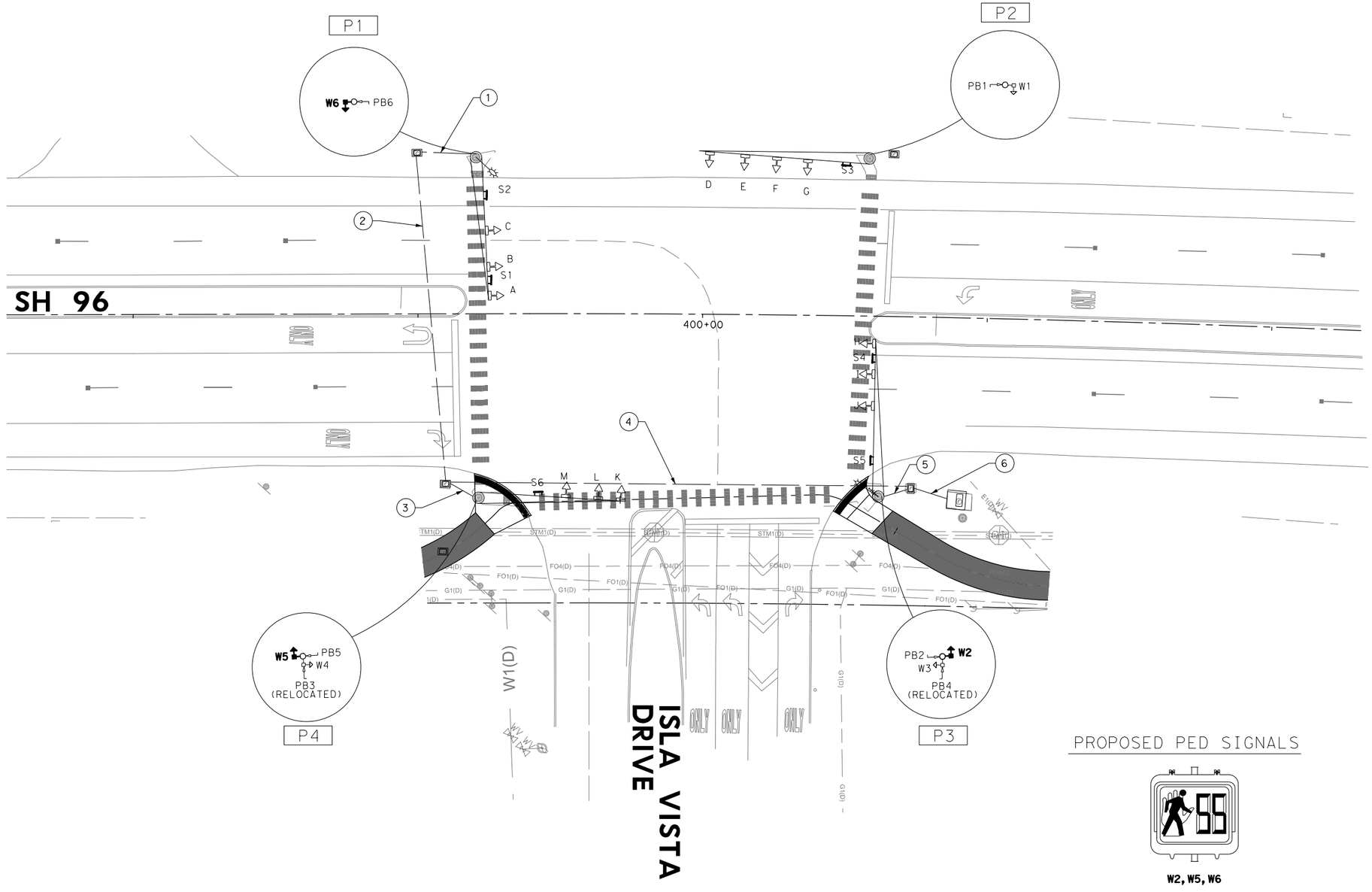

0' 10' 20' 40'

LEGEND

- RIGHT OF WAY
- EXISTING GROUND MOUNTED SIGN
- EXISTING MAST ARM POLE
- EXISTING PEDESTRIAN POLE
- EXISTING LUMINAIRE
- EXISTING TRAFFIC SIGNAL HEAD
- EXISTING PEDESTRIAN SIGNAL HEAD
- EXISTING PEDESTRIAN PUSH BUTTON
- EXISTING MAST ARM SIGN
- EXISTING RADAR DETECTION
- EXISTING CONTROLLER W/CABINET
- EXISTING GROUND BOX
- EXISTING SERVICE POLE
- EXISTING ANTENNA
- DIRECTION OF FLOW
- PROPOSED PEDESTRIAN SIGNAL HEAD
- PROPOSED PEDESTRIAN PUSH BUTTON
- PROPOSED TRAFFIC SIGNAL CONDUIT
- PROPOSED PEDESTRIAN POLE

PROPOSED PED SIGNALS

W2, W5, W6

NO.	DATE	REVISION	APPROVED

Emily Moran, PE, PTOE

STATE OF TEXAS
EMILY F. MORAN
138135
LICENSED
PROFESSIONAL ENGINEER

7/27/2023

Texas Department of Transportation
©2023

JONES|CARTER
Texas Board of Professional Engineers Registration No. F-23290
4350 Lockhill Selma Rd, Suite 100 • San Antonio, Texas 78249 • 210.494.5511

SH 96 AT ISLA VISTA DR PROPOSED SIGNAL CONDITION LAYOUT

(1 OF 2)

SHEET **26** OF **27**

DRAWN	FED.RD. DIV.NO.	FEDERAL AID PROJECT NO.		HIGHWAY NO.
LM	06			FM 270, ETC
DESIGNED	STATE	DIST.	COUNTY	SHEET NO.
EM	TEXAS	HOUSTON	GALVESTON	292
CHECKED	CONT.	SECT.	JOB	
GP	0912	73	215	
APPROVED				
DD				

EXISTING/PROP SIGNAL POLE CHART		
POLE NO.	**DESCRIPTION**	**STA, OFFSET**
P1	EXIST MAST ARM POLE WITH PROP PEDESTRIAN SIGNAL (1 EA), EXIST PED PUSH BUTTON (1 EA), EXIST PEDESTRIAN SIGN (1 EA), EXIST LUMINAIRE	–
P2	EXIST MAST ARM POLE WITH EXIST PEDESTRIAN SIGNAL (1 EA), EXIST PED PUSH BUTTON (1 EA), EXIST PEDESTRIAN SIGN (1 EA)	–
P3	EXIST MAST ARM POLE WITH EXIST PEDESTRIAN SIGNAL (1 EA), PROP PEDESTRIAN SIGNAL (1 EA), EXIST PED PUSH BUTTON (1 EA), EXIST PED PUSH BUTTON (1 EA) RELOCATED FROM P4, EXIST PEDESTRIAN SIGN (2 EA), EXIST LUMINAIRE	–
P4	EXIST MAST ARM POLE WITH EXIST PEDESTRIAN SIGNAL (1 EA), PROP PEDESTRIAN SIGNAL (1 EA), EXIST PED PUSH BUTTON (1 EA), EXIST PED PUSH BUTTON (1 EA) RELOCATED FROM P3, EXIST PEDESTRIAN SIGN (2 EA)	–

ELECTRICAL SCHEDULE							
ITEM	**DESCRIPTION**	**1**	**2**	**3**	**4**	**5**	**6**
PEDESTRIAN PUSH BUTTONS	2/C- #12 AWG			1	1	1	2
PEDESTRIAN SIGNALS	4/C- #12 AWG	1	1	1	2	1	3
CONDUIT	EXISTING	X	X	X	X	X	X

NO.	DATE	REVISION	APPROVED

Emily Moran, PE, PTOE

STATE OF TEXAS
EMILY F. MORAN
138135
LICENSED PROFESSIONAL ENGINEER

7/27/2023

Texas Department of Transportation
©2023

JONES|CARTER
Texas Board of Professional Engineers Registration No. F-23290
4350 Lockhill Selma Rd, Suite 100• San Antonio, Texas 78249 •210.494.5511

SH 96 AT ISLA VISTA DR
PROPOSED SIGNAL
CONDITION LAYOUT
(2 OF 2)

SHEET **27** OF **27**

DRAWN	FED.RD. DIV.NO.	FEDERAL AID PROJECT NO.		HIGHWAY NO.
LM	06			FM 270, ETC
DESIGNED	STATE	DIST.	COUNTY	SHEET NO.
EM	TEXAS	HOUSTON	GALVESTON	293
CHECKED	CONT.	SECT.	JOB	
GP	0912	73	215	
APPROVED				
DD				

PENTABLE: LCBF.tbl
PLOTDRIVER: LCBF.pltcfg
DATE: 7/27/2023 4:51:44 PM USER: EFM
FILE: c:\bms\pwe101-01\emily.moran\dms22654\LCBF_INT_11.3.dgn

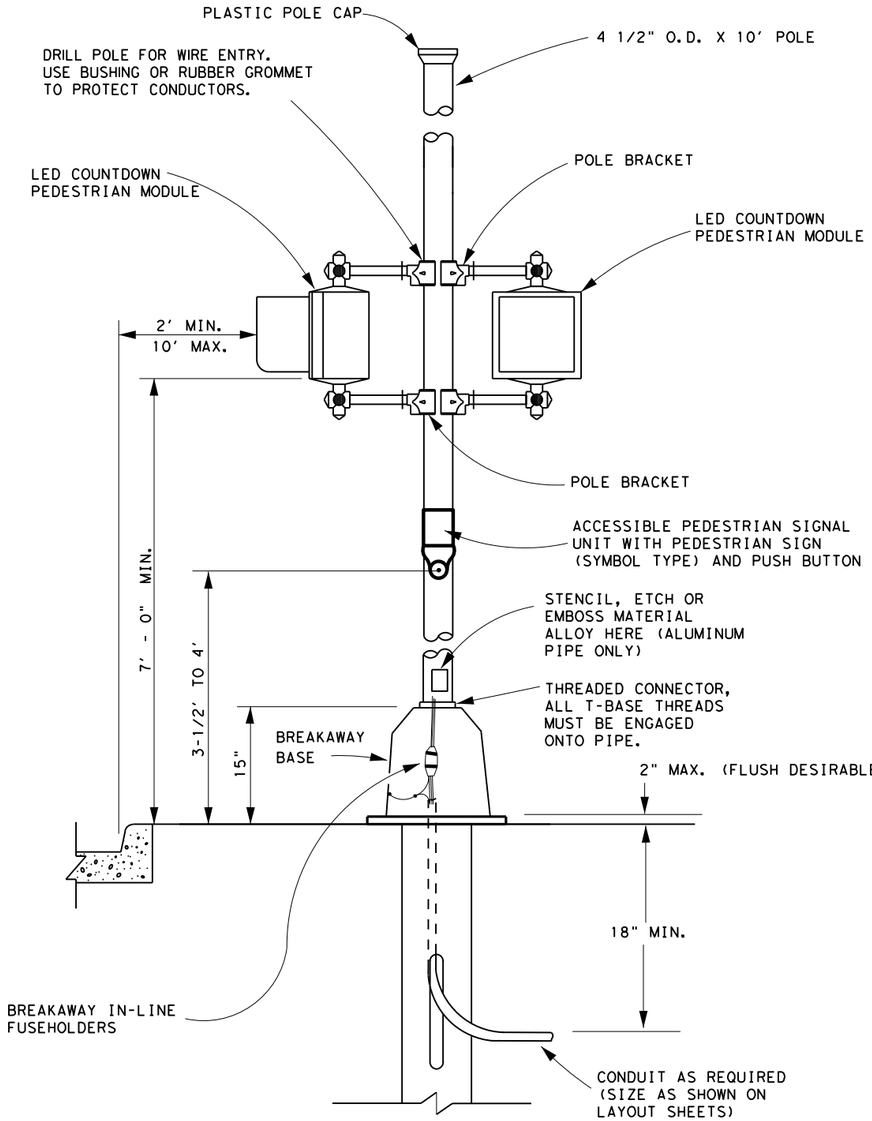

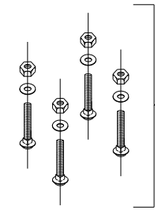

HARDWARE DETAIL

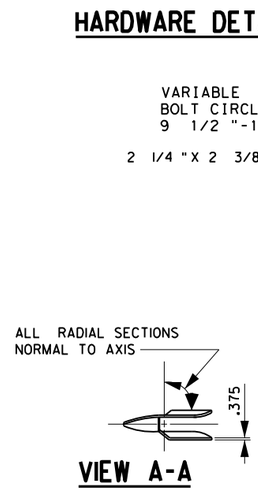

VIEW A-A

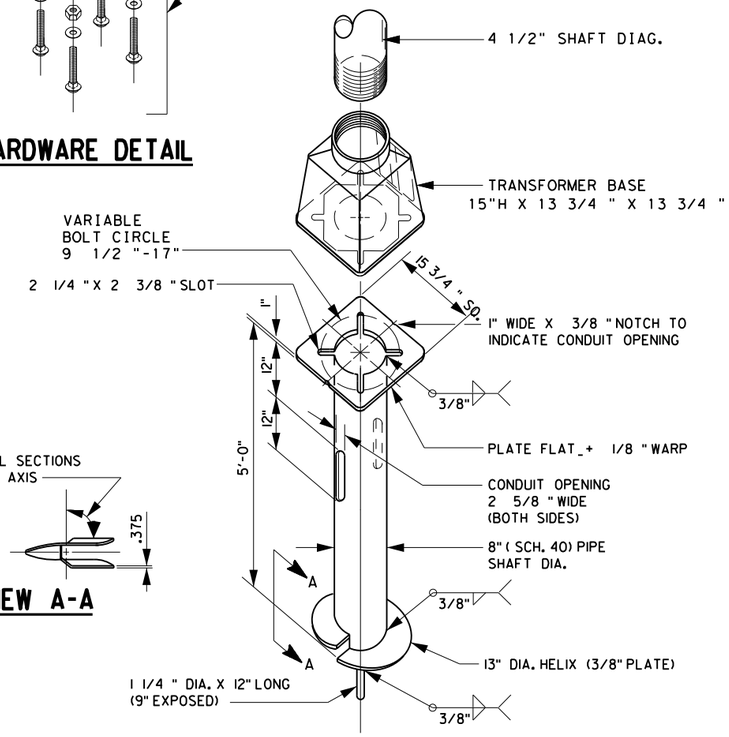

SCREW ANCHOR FOUNDATION DETAIL

NOTE:

SEE STANDARD (RFBA - 13) FOR NOTES AND NON - FUSED BREAKAWAY ELECTRICAL CONNECTOR DETAILS

Texas Department of Transportation
Houston District

SIGNAL DETAILS/STANDARDS CONSTRUCTION DETAILS FOR POLE MOUNTED (APS) PEDESTRIAN SIGNALS

CD/PM(APS)PS

FILE:	DN:	CK:	DW:	CK:
© TxDOT 2012	DIST	FED REG	PROJECT NO.	SHEET
REVISIONS 07-14 02-15	HOU	6		294
	COUNTY	CONTROL	SECT	JOB	HIGHWAY
	GALVESTON	0912	73	215	FM 270, ETC

STD-M19

DISCLAIMER:
The use of this standard is governed by the "Texas Engineering Practice Act". No warranty of any kind is made by TxDOT for any purpose whatsoever. TxDOT assumes no responsibility for the conversion of this standard to other formats or for incorrect results or damages resulting from its use.

DATE:
FILE:

GENERAL NOTES FOR ALL ELECTRICAL WORK

1. The location of all conduits, junction boxes, ground boxes, and electrical services is diagrammatic and may be shifted to accommodate field conditions.

2. Provide new and unused materials. Ensure that all materials and installations comply with the applicable articles of the National Electrical Code (NEC), TxDOT standards and specifications, National Electrical Manufacturers Association (NEMA), and are listed by Underwriters Laboratories (UL) or a Nationally Recognized Testing Lab (NRTL). NRTLs such as Canadian Standard Association (CSA), Intertek Testing Services NA Inc., or FM Approvals LLC can be considered equivalent to UL. Where reference is made to NEMA listed devices, International Electrotechnical Commission (IEC) listed devices will not be considered an acceptable equal to a NEMA listed device. Acceptable devices may have both a NEMA and IEC listing. Faulty fabrication or poor workmanship in any material, equipment, or installation is justification for rejection. Replace or reinstall rejected material or equipment at no additional cost to the Department.

3. Miscellaneous nuts, bolts and hardware, except for high strength bolts, may be stainless steel when plans specify galvanized, provided the bolt size is ½ in. or less in diameter.

4. Provide the following test equipment as required by the Engineer to confirm compliance with the contract and the NEC: voltmeter, ammeter, megohm meter (1000 volt DC), ground resistance tester, torque wrenches, and torque screwdrivers. Ensure all equipment has been properly calibrated within the last year. Provide calibration certification to the Engineer upon request. Operate test equipment during inspection as requested by the Engineer.

5. Install grounding as shown on the plans and in accordance with the NEC. Ensure all metallic conduits; metal poles; luminaires; and metal enclosures are bonded to the equipment grounding conductor. Provide stranded bare copper or green insulated grounding conductors. Ground rods, connectors, and bonding jumpers are subsidiary to the various bid items.

6. When required by the Engineer, notify the Department in writing of materials from the Material Producers List (MPL) intended for use on each project. Prequalified materials are listed on the MPL on TxDOT's website under "Roadway Illumination and Electrical Supplies." No substitutions will be allowed for materials on this list.

CONDUIT

A. MATERIALS

1. Provide conduit, junction boxes, fittings, and hardware as per TxDOT Departmental Material Specification (DMS) 11030 "Conduit" and Item 618 "Conduit" of TxDOT's "Standard Specifications For Construction And Maintenance Of Highways, Streets, And Bridges," latest edition. Provide conduits listed under Item 618 on the MPL under "Roadway Illumination and Electrical Supplies." Provide conduit types according to the descriptive code or as shown on the plans. Do not substitute other types of conduits for those shown. Provide liquidtight flexible metal conduit (LFMC) when flexible conduit is called for on galvanized steel rigid metallic conduit (RMC) systems. Provide liquidtight flexible nonmetallic conduit (LFNC) when flexible conduit is called for on polyvinyl chloride (PVC) systems.

2. Provide galvanized steel RMC for all exposed conduits, unless otherwise shown on the plans. Properly bond all metal conduits.

3. Unless otherwise shown on the plans, provide junction boxes with a minimum size as shown in the following table, which applies to the greatest number of conductors entering the box through one conduit with no more than four conduits per box. When a mixture of conductor sizes is present, count the conductors as if all are of the larger size. For situations not applicable to the table, size junction boxes in accordance with NEC.

AWG	3 CONDUCTORS	5 CONDUCTORS	7 CONDUCTORS
#1	10" x 10" x 4"	12" x 12" x 4"	16" x 16" x 4"
#2	8" x 8" x 4"	10" x 10" x 4"	12" x 12" x 4"
#4	8" x 8" x 4"	10" x 10" x 4"	10" x 10" x 4"
#6	8" x 8" x 4"	8" x 8" x 4"	10" x 10" x 4"
#8	8" x 8" x 4"	8" x 8" x 4"	8" x 8" x 4"

4. Junction boxes with an internal volume of less than 100 cu. in. and supported by entering raceways must have threaded entries or hubs identified for the intended purpose and supported by connection of two or more rigid metal conduits. Secure conduit within 3 ft. of the enclosure or within 18 in. of the enclosure if all conduit entries are on the same side. Mechanically secure all junction boxes with an internal volume greater than 100 cu. inches.

5. Provide hot dipped galvanized cast iron or sand cast aluminum outlet boxes for junction boxes containing only 10 AWG or 12 AWG conductors. Do not use die cast aluminum boxes. Size outlet boxes according to the NEC.

6. Do not use intermediate metal conduit (IMC) or electrical metallic tubing (EMT) unless specifically required by the plan sheets. When EMT is called for, provide junction boxes made from galvanized steel sheeting, listed and approved for outdoor use, unless otherwise noted on the plans. Size all galvanized steel junction boxes in accordance with the NEC. Provide junction boxes for IMC conduit systems that meet the same requirements for junction boxes used with RMC systems.

7. Provide PVC junction boxes intended for outdoor use on PVC conduit systems, unless otherwise noted on the plans.

8. Provide PVC elbows in PVC conduit systems, unless otherwise shown on the plans. Use only a flat, high tensile strength polyester fiber pull tape for pulling conductors through the PVC conduit system. When galvanized steel RMC elbows are specifically called for in the plans and any portion of the RMC elbow is buried less than 18 in., ground the RMC elbow by means of a grounding bushing on a rigid metal extension. Grounding of the rigid metal elbow is not required if the entire RMC elbow is encased in a minimum of 2 in. of concrete. PVC extensions are allowed on these concrete encased rigid metal elbows. RMC or PVC elbows are subsidiary to various bid items.

9. When required, provide High-Density Polyethylene (HDPE) conduit with factory installed internal conductors according to Item 622 "Duct Cable." At the Contractor's request and with approval by the Engineer, substitute HDPE conduit with no conductors for bored schedule 40 or schedule 80 PVC conduit bid under Item 618. Ensure bored HDPE substituted for PVC is schedule 40 and of the same size PVC called for in the plans. Ensure the substituted HDPE meets the requirements of Item 622, except that the conduit is supplied without factory-installed conductors. Make the transition of the HDPE conduit to PVC (or RMC elbow when required) at the bore pit. Provide conduit of the size and schedule as shown on the plans. Do not extend substituted conduit into ground boxes or foundations. Provide PVC or galvanized steel RMC elbows as called for at all ground boxes and foundations.

10. Use two-hole straps when supporting 2 in. and larger conduits. On electrical service poles, properly sized stainless steel or hot dipped galvanized one-hole standoff straps are allowed on the service riser conduit.

B. CONSTRUCTION METHODS

1. Provide and install expansion joint conduit fittings on all structure-mounted conduits at the structure's expansion joints to allow for movement of the conduit. In addition, provide and install expansion joint fittings on all continuous runs of galvanized steel RMC conduit externally exposed on structures such as bridges at maximum intervals of 150 ft. When requested by the project Engineer, supply manufacturer's specification sheet for expansion joint conduit fittings. Repair or replace expansion joint fittings that do not allow for movement at no additional cost to the Department. Provide the method of determining the amount of expansion to the Engineer upon request. Do not use LFMC or LFNC as a substitute for the required expansion conduit fittings.

2. Space all conduit supports at maximum intervals of 5 ft. Install conduit spacers when attaching metal conduit to surface of concrete structures. See "Conduit Mounting Options" on ED(2). Install conduit support within 3 ft. of all enclosures and conduit terminations.

3. Do not attach conduit supports directly to pre-stressed concrete beams except as shown specifically in the plans or as approved by the Engineer.

4. Unless otherwise shown on the plans, jack or bore conduit placed beneath existing roadways, driveways, sidewalks, or after the base or surfacing operation has begun. Backfill and compact the bore pits below the conduit per Item 476 "Jacking, Boring, or Tunneling Pipe or Box" prior to installing conduit or duct cable to prevent bending of the connections.

5. When placing conduit in the sub-grade of new roadways, backfill all trenches with excavated material unless otherwise noted on the plans. When placing conduit in the sub-base of new roadways, backfill all trenches with cement-stabilized base as per requirements of Items 110 "Excavation", 400 "Excavation and Backfill for Structures", 401 "Flowable Backfill", 402 "Trench Excavation Protection", and 403 "Temporary Special Shoring."

6. Provide and place warning tape approximately 10 in. above all trenched conduit as per Item 618.

7. During construction, temporarily cap or plug open ends of all conduit and raceways immediately after installation to prevent entry of dirt, debris and animals. Temporary caps constructed of durable duct tape are allowed. Tightly fix the tape to the conduit opening. Clean out the conduit and prove it clear in accordance with Item 618 prior to installing any conductors.

8. Ensure conduit entry into the top of any enclosure is waterproof by installing conduit sealing hubs or using boxes with threaded bosses. This includes surface mounted safety switches, meter cans, service enclosures, auxiliary enclosures and junction boxes. Grounding bushings on water tight sealing hubs are not required.

9. Fit the ends of all PVC conduit terminations with bushings or bell end fittings. Provide and install a grounding type bushing on all metal conduit terminations.

10. Install a bonding jumper from each grounding bushing to the nearest ground rod, grounding lug, or equipment grounding conductor. Ensure all bonding jumpers are the same size as the equipment grounding conductor. Bonding of conduit used as a casing under roadways for duct cable is not required, if the duct extends the full length through the casing.

11. At all electrical services, install a 6 AWG solid copper grounding electrode conductor.

12. Place conduits entering ground boxes so that the conduit openings are between 3 in. and 6 in. from the bottom of the box. See the ground box detail on sheet ED(4).

13. Seal ends of all conduits with duct seal, expandable foam, or by other methods approved by the Engineer. Seal conduit immediately after completion of conductor installation and pull tests. Do not use duct tape as a permanent conduit sealant. Do not use silicone caulk as a conduit sealant.

14. File smooth the cut ends of all mounting strut and conduit. Before installing, paint the field cut ends of all mounting strut and RMC (threaded or non-threaded) with zinc rich paint (94% or more zinc content) to alleviate overspray. Use zinc rich paint to touch up galvanized material as allowed under Item 445 "Galvanizing." Do not paint non-galvanized material with a zinc rich paint as an alternative for materials required to be galvanized.

Texas Department of Transportation

Traffic Operations Division Standard

ELECTRICAL DETAILS CONDUITS & NOTES

ED(1)-14

FILE:	ed1-14.dgn	DN:	CK:	DW:	CK:
© TxDOT	October 2014	CONT	SECT	JOB	HIGHWAY
REVISIONS		0912	73	215	FM 270, ETC
		DIST	COUNTY		SHEET NO.
		HOU	GALVESTON		295

71A

DISCLAIMER:
The use of this standard is governed by the "Texas Engineering Practice Act". No warranty of any kind is made by TxDOT for any purpose whatsoever. TxDOT assumes no responsibility for the conversion of this standard to other formats or for incorrect results or damages resulting from its use.

ELECTRICAL CONDUCTORS

A. MATERIAL INFORMATION

1. Provide Type XHHW insulated conductors in accordance with Departmental Material Specification (DMS)11040 "Conductors" and Item 620 "Electrical Conductors." Provide conductors as listed on the Material Producers List (MPL) on the Department web site under "Roadway Illumination and Electrical Supplies" Item 620. Color code insulated conductors in conformance with the NEC. Identify grounded (neutral) conductors with white insulation. Identify grounding conductors (ground wires) with green insulation or bare conductors. Identify ungrounded (hot) conductors with any color insulation except green, white, or gray. Keep color scheme consistent throughout the wiring system. Identify conductors 6 American Wire Gauge (AWG) and smaller by continuous color jacket. Identify electrical conductors 4 AWG and larger by continuous color jacket or by colored tape. When identifying conductors with colored tape, mark at least 6 in. of the conductor's insulation with half laps of tape.
2. Provide a solid copper 6 AWG grounding electrode conductor to bond the electrical service equipment to the concrete encased grounding electrode or the ground rod at the service location. Connect the grounding electrode conductor to the ground rod with a UL listed connector in accordance with DMS 11040. Connect the grounding electrode conductor to the concrete encased grounding electrode as shown in the plans.
3. Where two or more circuits are present in one conduit or enclosure, permanently identify the conductors of each branch circuit by attaching a non-metallic tag around both circuit conductors at each accessible location. Provide tags with two straps, large enough to indicate circuit number, letter, or other identification as shown in the plans. Print circuit identification on the tag with a permanent marker.
4. Use listed compression or screw type pressure connectors, terminal blocks, or split bolt connectors for splicing as specified in DMS 11040. Use hot melt adhesive tape to fill the gap and seal the ends of heat shrink tubing. Provide UL listed gel-filled insulating splice covers. Splicing materials, insulating materials, breakaway disconnects, splice covers, and fuse holders are subsidiary to various bid items.

B. CONSTRUCTION METHODS

1. Use only a flat, high tensile strength polyester fiber pull tape for pulling conductors through the conduit system. After installing conductors in conduit, perform conductor pull test. If a conductor cannot be freely pulled, make any needed alterations or repairs at no additional cost to the department. Perform insulation resistance tests in accordance with Item 620. Coordinate with the Engineer to witness the tests.
2. Leave 2 ft. minimum, 3 ft. maximum length for each conductor up to the splice in ground boxes. Leave 3 ft. minimum, 4 ft. maximum length of conductor in ground boxes when pulled through with no splice. Leave 1 ft. minimum, 1.5 ft. maximum length of conductor at enclosures, weatherheads and pole bases.
3. Make splices only in junction boxes, ground boxes, pole bases, or electrical enclosures and use only listed compression or screw type pressure connectors, terminal blocks, or split bolt connectors. Insulate splices with heavy wall heat shrink tubing or gel-filled insulating splice covers to provide a watertight splice. Overlap conductor insulation with heat shrink tubing a minimum of 2 in. past both sides of the splice. Where heat shrink tubing may not shrink sufficiently to provide a watertight seal around the individual conductors, prior to heating the tubing, increase the diameter of the conductor insulation using hot melt adhesive tape to provide a watertight seal between the individual conductors and the heat shrink tubing. Ensure the tape extends past the heat shrink tubing. Use hot melt adhesive tape to fill the gap and seal the ends of heat shrink tubing. Heat shrink tubing that appears to have been burned, or overheated, is considered defective and must be replaced.
4. Size and install gel-filled insulating splice covers according to manufacturer's specifications when used in place of heat shrink tubing.
5. Wire nuts with factory applied waterproof sealant may be used for 8 AWG or smaller conductors in above ground junction boxes, but not in pole bases or ground boxes. Install wire nuts in an upright position to prevent the accumulation of water.
6. Support conductors in illumination poles with a J-hook at the top of the pole.
7. When terminating conductors, remove the insulation and jacketing material without nicking the individual strands of the conductor. Conductors with nicked individual conductor strands or removed strands will be considered damaged.
8. Replace conductors and cables that are damaged beyond repair or that fail an insulation resistance test at no additional cost to the department.
9. Do not repair damaged conductors with duct tape, electrical tape, or wire nuts. Use only approved splicing methods.
10. Do not terminate more than one conductor under a single connector, unless the connector is rated for multiple conductors. Do not exceed the pressure connector's listing for maximum number and size of conductors allowed.
11. Install breakaway connectors on conductors bid under Item 620 whenever those conductors pass through a breakaway support device. Follow manufacturer's instructions when terminating conductors to breakaway connectors. Properly torque threaded connections. Proper terminations are critical to the safe operation of breakaway devices. Trim waterproofing boots on breakaway connectors to fit snugly around the conductor to ensure waterproof connection. Only one conductor may enter a single opening in a boot. Provide waterproof boots with the correct number of openings. Leave unused openings factory sealed. Use prequalified breakaway connectors as shown on the MPL.
12. Provide and install a separate stranded equipment grounding conductor (EGC) in all conduits that contain circuit wiring of 50 volts or more. Unless shown elsewhere, size the EGC to be the same size as the largest current carrying conductor contained in the conduit. Ensure all EGCs are bonded together at every accessible location. For traffic signal installations, provide a minimum size 8 AWG EGC. The EGC is paid for under Item 620.

C. TEMPORARY WIRING

1. Install temporary conductors and electrical equipment in accordance with the NEC article "Temporary Installations" and Department standard sheets.
2. Provide a ground fault circuit interrupter (GFCI) for power outlets for portable electrical equipment, power tools, ice machines, ice storage bins and refrigerators located outdoors at grade. GFCI may be any one of the following: molded cord and plug set, receptacle, or circuit breaker type.
3. Use listed wire nuts with factory applied sealant for temporary wiring where approved.
4. Enclose conductor splices within a listed enclosure or ground box, or ensure the splices are more than 10 ft. above grade vertically and more than 5 ft. horizontally from any metal structure. Where installing temporary conductors in areas subject to vehicle traffic or mobile construction equipment, ensure the vertical clearance to ground is at least 18 ft. when measured at the lowest point. Ground messenger wires that support power conductors in conformance with the NEC.
5. Protect and when necessary repair any existing electrical conduits uncovered during the construction process in a timely manner and in conformance with the NEC.

GROUND RODS & GROUNDING ELECTRODES

A. MATERIAL INFORMATION

1. Provide and install a grounding electrode at electrical services. Provide ground rods according to DMS 11040 and the plans. Larger diameter or longer length rods may be called for in some specific locations, see the individual plans sheets. Concrete encased grounding electrodes may be called for in specific locations including electrical service, see individual plan sheets.

B. CONSTRUCTION METHODS

1. Furnish auxiliary ground rods for lightning protection and install in soil, concrete, or both, as called for in the plans. For ground rods installed in concrete, ensure the connection of the conductor to the ground rod is readily accessible for inspection or repairs. For ground rods installed in soil, ensure that the upper end is between 2 to 4 in. below finished grade.
2. Do not place ground rods in the same drilled hole as a timber pole.
3. Install ground rods so the imprinted part number is at the upper end of the rod.
4. Remove all non-conductive coatings such as concrete splatter from the rod at the clamp location.
5. Route all conductors as short and straight as possible for connection to lightning protection ground rods. When a bend is required, ensure a minimum radius bend of four inches for these conductors.
6. Unless otherwise called for in the plans, protect grounding electrode conductors with non-metallic conduit. When protecting grounding electrode conductors with metal conduit, provide and install a grounding type bushing and properly sized bonding jumper on each end of the metal conduit.
7. Written authorization is required before installing a ground rod in a horizontal trench for rocky soil or a solid rock bottom.

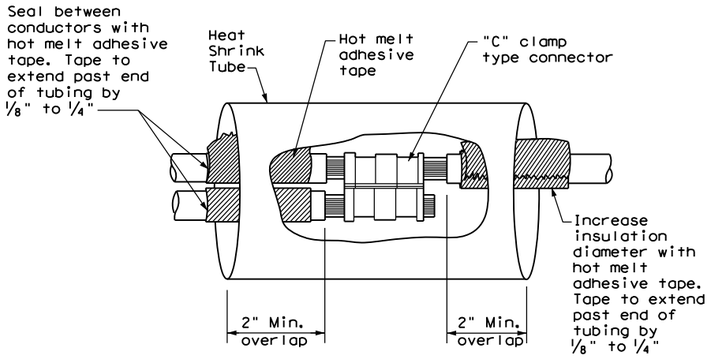

SPLICE OPTION 1
Compression Type

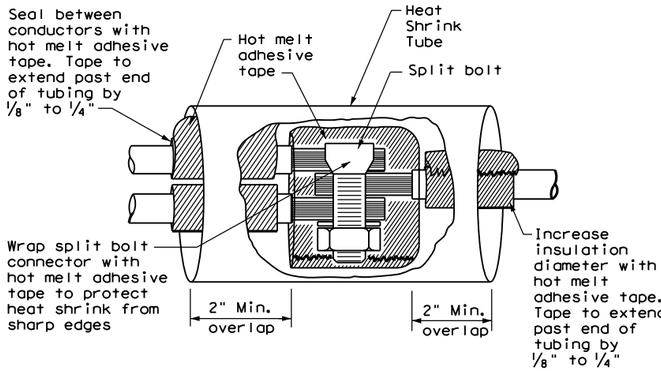

SPLICE OPTION 2
Split Bolt Type

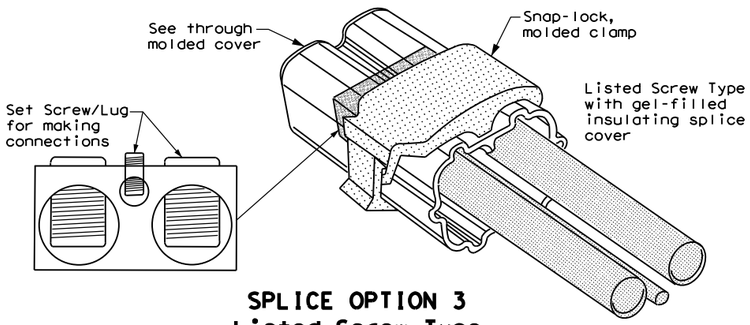

SPLICE OPTION 3
Listed Screw Type

Texas Department of Transportation

Traffic Operations Division Standard

ELECTRICAL DETAILS CONDUCTORS

ED(3)-14

FILE:	ed3-14.dgn	DN: TxDOT	CK: TxDOT	DW: TxDOT	CK: TxDOT
©TxDOT	October 2014	CONT	SECT	JOB	HIGHWAY
REVISIONS		0912	73	215	FM 270, ETC
		DIST	COUNTY		SHEET NO.
		HOU	GALVESTON		296

DATE:
FILE:

71C

DISCLAIMER:
The use of this standard is governed by the "Texas Engineering Practice Act". No warranty of any kind is made by TxDOT for any purpose whatsoever. TxDOT assumes no responsibility for the conversion of this standard to other formats or for incorrect results or damages resulting from its use.

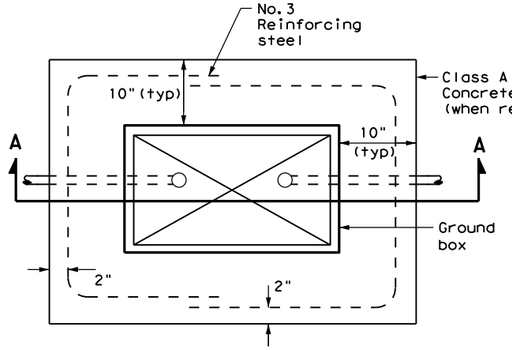

PLAN VIEW

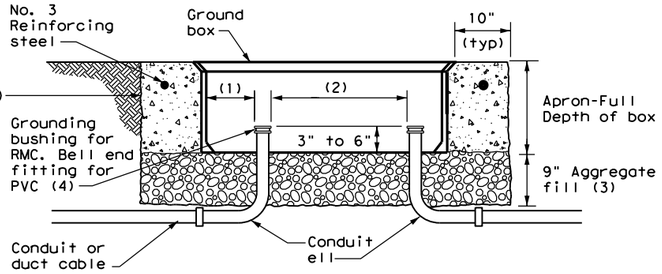

SECTION A - A

APRON FOR GROUND BOX

(1) Uniformly space ends of conduits within the ground box. Position ends of conduits so that ground box walls do not interfere with the installation of grounding bushings or bell end fittings.

(2) Maintain sufficient space between conduits to allow for proper installation of bushing.

(3) Place aggregate under the box, not in the box. Aggregate should not encroach on the interior volume of the box.

(4) Install a grounding bushing on the upper end of all RMC terminating in a ground box. Ground RMC elbows when any part of the elbow is less than 18 in. below the bottom of the ground box. Install a PVC bushing or bell end fitting on the upper end of all PVC conduits terminating in a ground box.

GROUND BOX DIMENSIONS	
TYPE	OUTSIDE DIMENSIONS (INCHES) (Width x Length X Depth)
A	12 X 23 X 11
B	12 X 23 X 22
C	16 X 29 X 11
D	16 X 29 X 22
E	12 X 23 X 17

GROUND BOX COVER DIMENSIONS								
TYPE	DIMENSIONS (INCHES)							
	H	I	J	K	L	M	N	P
A, B & E	23 1/4	23	13 3/4	13 1/2	9 7/8	5 1/8	1 3/8	2
C & D	30 1/2	30 1/4	17 1/2	17 1/4	13 1/4	6 3/4	1 3/8	2

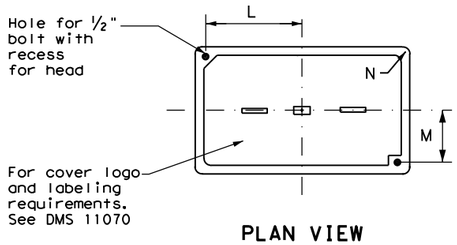

PLAN VIEW

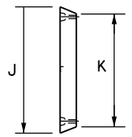

END

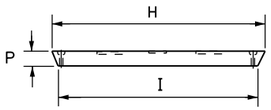

SIDE

GROUND BOX COVER

GROUND BOXES

A. MATERIALS

1. Provide polymer concrete ground boxes measuring 16x30x24 in. (WxLxD) or smaller in accordance with Departmental Material Specification (DMS) 11070 "Ground Boxes" and Item 624 "Ground Boxes."

2. Provide Type A, B, C, D, and E ground boxes as shown in the plans, and as listed on the Material Producers List (MPL) on the Department web site under "Roadway Illumination and Electrical Supplies," Item 624.

3. Ensure ground box cover is correctly labeled in accordance with DMS 11070.

4. Provide larger ground boxes in accordance with Item 624 and as shown in the plans.

B. CONSTRUCTION METHODS

1. Remove all gravel and dirt from conduit. Cap all conduits prior to placing aggregate and setting ground box. Provide Grade 3 or 4 coarse aggregate as shown on Table 2 of Item 302 "Aggregates for Surface Treatments." Ensure aggregate bed is in place and at least 9 inches deep, prior to setting the ground box. Install ground box on top of aggregate.

2. Cast ground box aprons in place. Reinforcing steel may be field bent. Ensure the depth of concrete for the apron extends from finished grade to the top of the aggregate bed under the box. Ground box aprons, including concrete and reinforcing steel, are subsidiary to ground boxes when called for by descriptive code.

3. Keep bolt holes in the box clear of dirt. Bolt covers down when not working in ground boxes.

4. Install all conduits and ells in a neat and workmanlike manner. Uniformly space conduits so grounding bushings and bell end fittings can easily be installed.

5. Temporarily seal all conduits in the ground box until conductors are installed.

6. Permanently seal conduits immediately after the completion of conductor installation and pull tests. Permanently seal the ends of all conduits with duct seal, expandable foam, or other method as approved. Do not use duct tape as a permanent conduit sealant. Do not use silicone caulk as a sealant.

7. When a ground rod is present in a ground box, bond all equipment grounding conductors together and to the ground rod with listed connectors.

8. When a type B or D ground box is stacked to meet volume requirements, it is allowable to cut an appropriately sized hole for conduit entry in the side wall at least 18 inches below grade.

9. If an existing ground box in the contract has a metal cover, bond the cover to the equipment grounding conductor with a 3 ft. long stranded bonding jumper the same size as the grounding conductor. The bonding jumper is subsidiary to various bid items. Verify existing ground boxes with metal covers are shown on the plans, with notes fully describing the work required.

10. If other ground boxes with metal covers are within the project limits but are not part of the contract, the Engineer may direct the Contractor to bond the metal covers, identifying the specific boxes in writing. This work will be paid for separately.

11. Bond metal ground box covers to the grounding conductor with a tank ground type lug.

Texas Department of Transportation

Traffic Operations Division Standard

ELECTRICAL DETAILS
GROUND BOXES

ED(4)-14

FILE: ed4-14.dgn	DN: TxDOT	CK: TxDOT	DW: TxDOT	CK: TxDOT
©TxDOT October 2014	CONT	SECT	JOB	HIGHWAY
REVISIONS	0912	73	215	FM 270, ETC
	DIST	COUNTY		SHEET NO.
	HOU	GALVESTON		297

DATE:
FILE:

71D

DISCLAIMER:
The use of this standard is governed by the "Texas Engineering Practice Act". No warranty of any kind is made by TxDOT for any purpose whatsoever. TxDOT assumes no responsibility for the conversion of this standard to other formats or for incorrect results or damages resulting from its use.

DATE:
FILE:

TRAFFIC SIGNAL NOTES

1. Do not pass luminaire conductors through the signal controller cabinet.
2. Include an equipment grounding conductor in all conduits throughout the electrical system. Bond all exposed metal parts to the grounding conductor.
3. Provide roadway luminaires, when required, in accordance with the material and construction sections of Item 610, "Roadway Illumination Assemblies," except for performance testing of luminaires. Test installed roadway luminaires for proper operation as a part of the associated traffic signal system test.
4. If internally illuminated street name signs are approved for use, ground the fixture to the pole with a 12 AWG green XHHW conductor.
5. Bond anchor bolts to rebar cage in two locations using #3 bars or 6 AWG stranded copper conductors. Use listed mechanical connectors rated for embedment in concrete. See TXDOT standard TS-FD for further details.
6. Drill and tap signal poles for ½ in. X 13 UNC tank ground fitting. Provide and install tank ground fitting 4 in. to 6 in. directly below electrical service enclosure. Provide properly sized hole through the bottom of the enclosure for the service grounding electrode conductor. Connect the electrical service grounding electrode conductor to the tank ground fitting. Ensure electrical service grounding electrode conductor is as short and straight as possible from the enclosure to the tank ground fitting. See Inset A detail for further information. Size service entrance conduit and branch circuit conduit as shown in the plans.
7. Mount electrical service enclosure and meter to signal pole with stainless steel bands. Ensure bands are a minimum width of ¾ in. Secure enclosures to bands using two-bolt brackets. Install brackets near top and bottom of each enclosure. Install properly sized stainless steel washers on each bolt in the enclosure. Band or drill and tap properly sized stand-off straps to signal pole for attaching conduit.
8. Conduct pull tests and insulation resistance tests on all illumination and power conductors as required in Item 620 "Electrical Conductors" and ED(3). To prevent electronics damage, do not conduct insulation resistance tests on traffic signal cables after termination.
9. Lock all enclosures and bolt down all ground box covers before applying power to the signal installation.
10. Terminate conduits entering the top of enclosures with a conduit-sealing hub or threaded boss such as meter hub. Install a grounding bushing on all metal conduits not connected to conduit-sealing hub or threaded boss. Bond the grounding bushing to the ground bus with a bonding jumper. Seal all conduits entering enclosures with duct seal or expanding foam. Do not use silicone to seal conduit ends.
11. For all conduits, ensure the burial depth is a minimum of 18". Ensure the minimum burial depth for conduit placed under a roadway is 24".

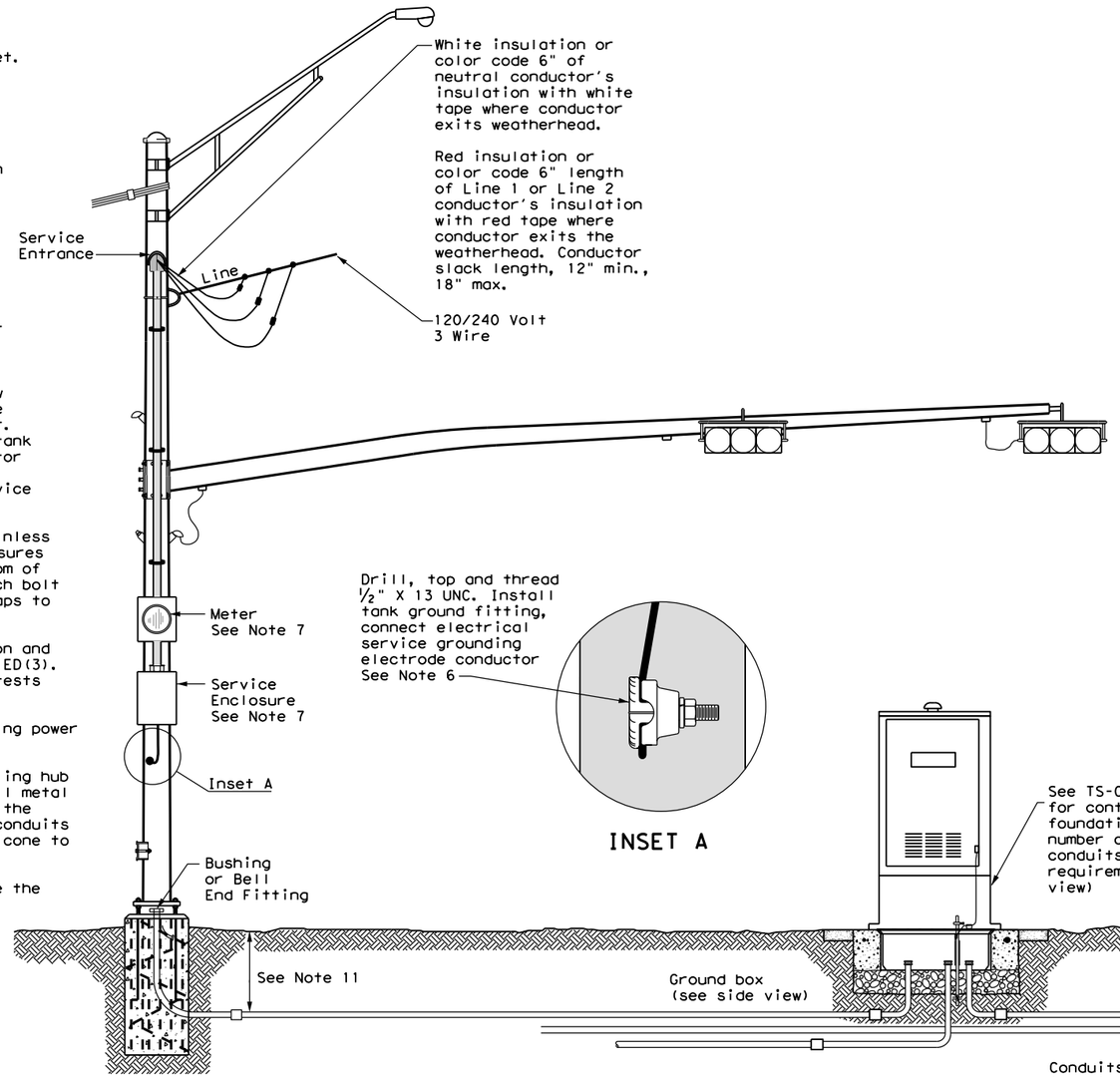

SIGNAL POLE WITH SERVICE

Type T electrical service mounted on signal pole shown as an example. See electrical details, layout sheets, and electrical service data chart for additional details.

INSET A

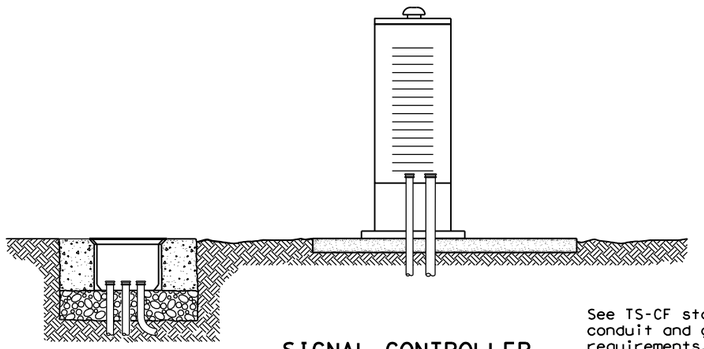

SIGNAL CONTROLLER SIDE VIEW

See TS-CF standard for conduit and grounding requirements. See layout sheets for ground box locations and any additional conduits that are required.

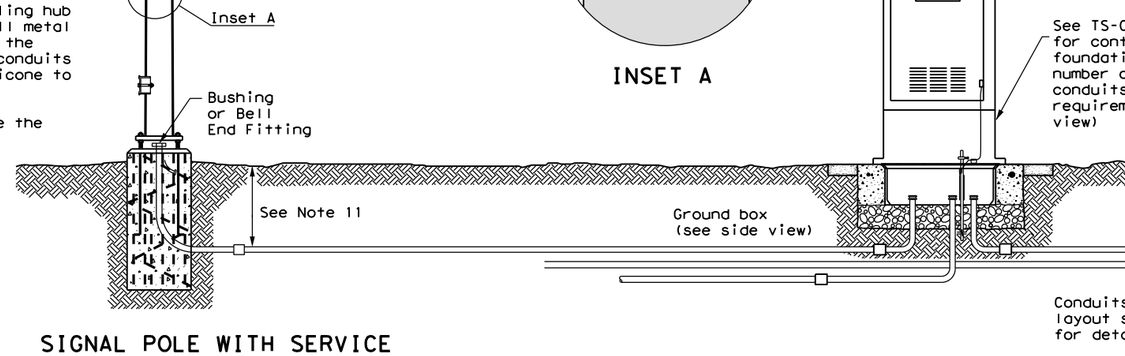

SIGNAL CONTROLLER FRONT VIEW

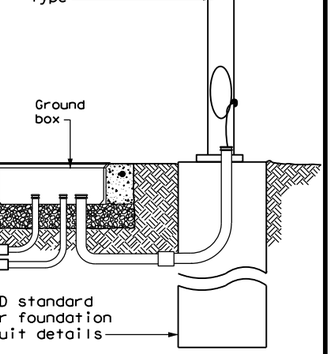

SIGNAL POLE

Texas Department of Transportation

Traffic Operations Division Standard

ELECTRICAL DETAILS TYPICAL TRAFFIC SIGNAL SYSTEM DETAILS

ED(8)-14

FILE: ed8-14.dgn	DN: TxDOT	CK: TxDOT	DW: TxDOT	CK: TxDOT
©TxDOT October 2014	CONT	SECT	JOB	HIGHWAY
REVISIONS	0912	73	215	FM 270, ETC
	DIST	COUNTY		SHEET NO.
	HOU	GALVESTON		298

71H

DISCLAIMER:
The use of this standard is governed by the "Texas Engineering Practice Act". No warranty of any kind is made by TxDOT for any purpose whatsoever. TxDOT assumes no responsibility for the conversion of this standard to other formats or for incorrect results or damages resulting from its use.

GENERAL NOTES:

1. Details show a typical warning sign with two flashing beacon heads, other arrangements are possible. When only one beacon is required, install the upper beacon.

2. See Item 685, "Roadside Flashing Beacon Assemblies" for further requirements.

3. See SMD standard sheets for lateral and vertical clearances and sign mounting details. Install signs as shown on the sign layout sheets.

4. Use either a Screw-In Type Anchor Foundation or a Drilled Shaft Foundation as shown elsewhere in the plans. When plans require a Drilled Shaft Foundation, see standard sheet TS-FD. Install the Screw-In Type Anchor Foundation as per manufacturer's recommendations. On a slope, install one edge at ground level. Screw-In/Drilled Shaft Foundation is subsidiary to Item 685. Installation of a ground rod is not required for solar powered flashing beacon assemblies.

5. When used, provide Screw-In Type Anchor Foundations as shown on TxDOT's Material Producer List (MPL) in the file "Highway Traffic Signals".

6. Install beacon heads as shown here, as shown elsewhere on the plans, or as directed. Use hardware specifically designed for mounting beacon heads on poles.

7. Conduit in foundation and within 6 in. of foundation is subsidiary to the Item 685, "Roadside Flashing Beacon Assemblies."

8. Unless otherwise shown on the plans, pole shaft shall be one piece, Schedule 40 Aluminum pipe, ASTM B429 or B221 (Alloy 6061-T6 only). Aluminum conduit will not develop the necessary strength and will not be allowed.

9. Per manufacturer's recommendations, engage all threads on the pedestal pole base and pipe unless the pipe is fully seated into base. In high winds, use a pole and base collar assembly to add strength and prevent loosening of connection.

10. Provide single pole non-fused watertight breakaway electrical connectors for frangible pedestal pole bases, as shown on TxDOT's MPL in the file "Roadway Illumination and Electrical Supplies." Approved models are listed under Item 685. For ungrounded (hot) conductors, install a breakaway connector with a dummy fuse slug). For grounded (neutral) conductors, install a breakaway connector with a white colored marking and a permanently installed dummy fuse (slug).

11. Provide clearance as shown above the sidewalk or pavement grade at the edge of the road. When a bottom beacon is not used, mount the bottom of the sign at least 7 ft. above the sidewalk or pavement grade at the edge of the road.

12. Make connections to ground rods according to NEC. Ground rod clamps shall be listed for their intended purpose.

13. Ensure height of conduit and ground rod is below top of anchor bolts.

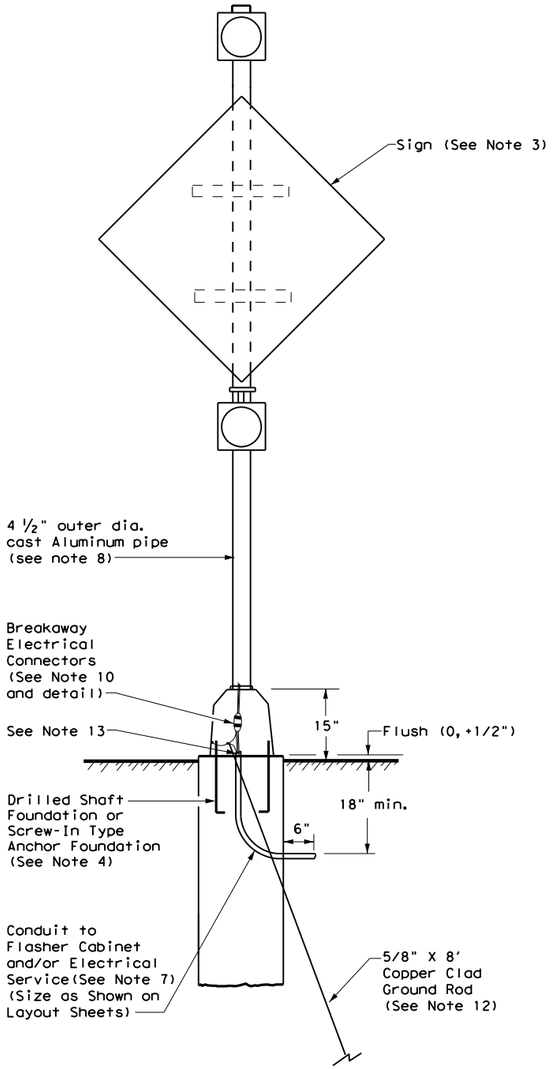

FRONT

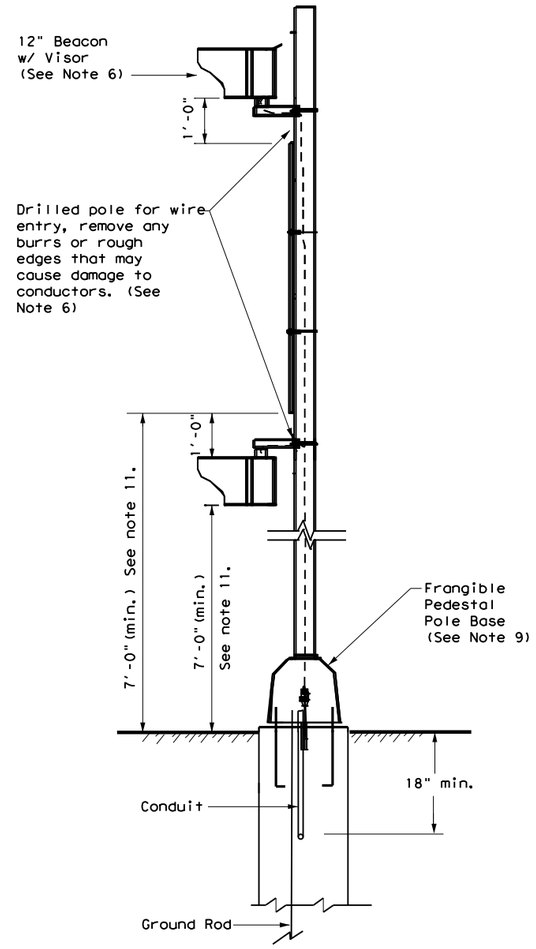

SIDE

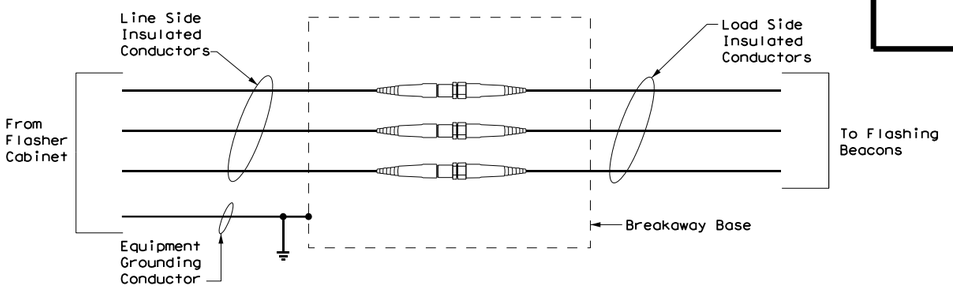

NON-FUSED BREAKAWAY ELECTRICAL CONNECTORS

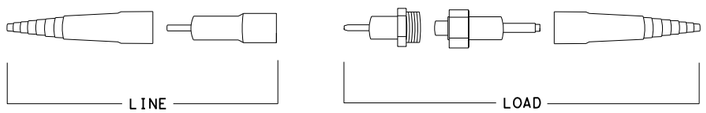

NON-FUSED BREAKAWAY ELECTRICAL CONNECTORS
EXPLODED VIEW

Texas Department of Transportation

Traffic Operations Division Standard

ROADSIDE FLASHING BEACON ASSEMBLY

RFBA-13

FILE: rfba-13.dgn	DN: TxDOT	CK: TxDOT	DW: TxDOT	CK: TxDOT
©TxDOT January 1992	CONT	SECT	JOB	HIGHWAY
REVISIONS 5-93 12-04 10-93 3-13 4-98	0912	73	215	FM 270, ETC
	DIST	COUNTY		SHEET NO.
	HOU	GALVESTON		299

DATE:
FILE:

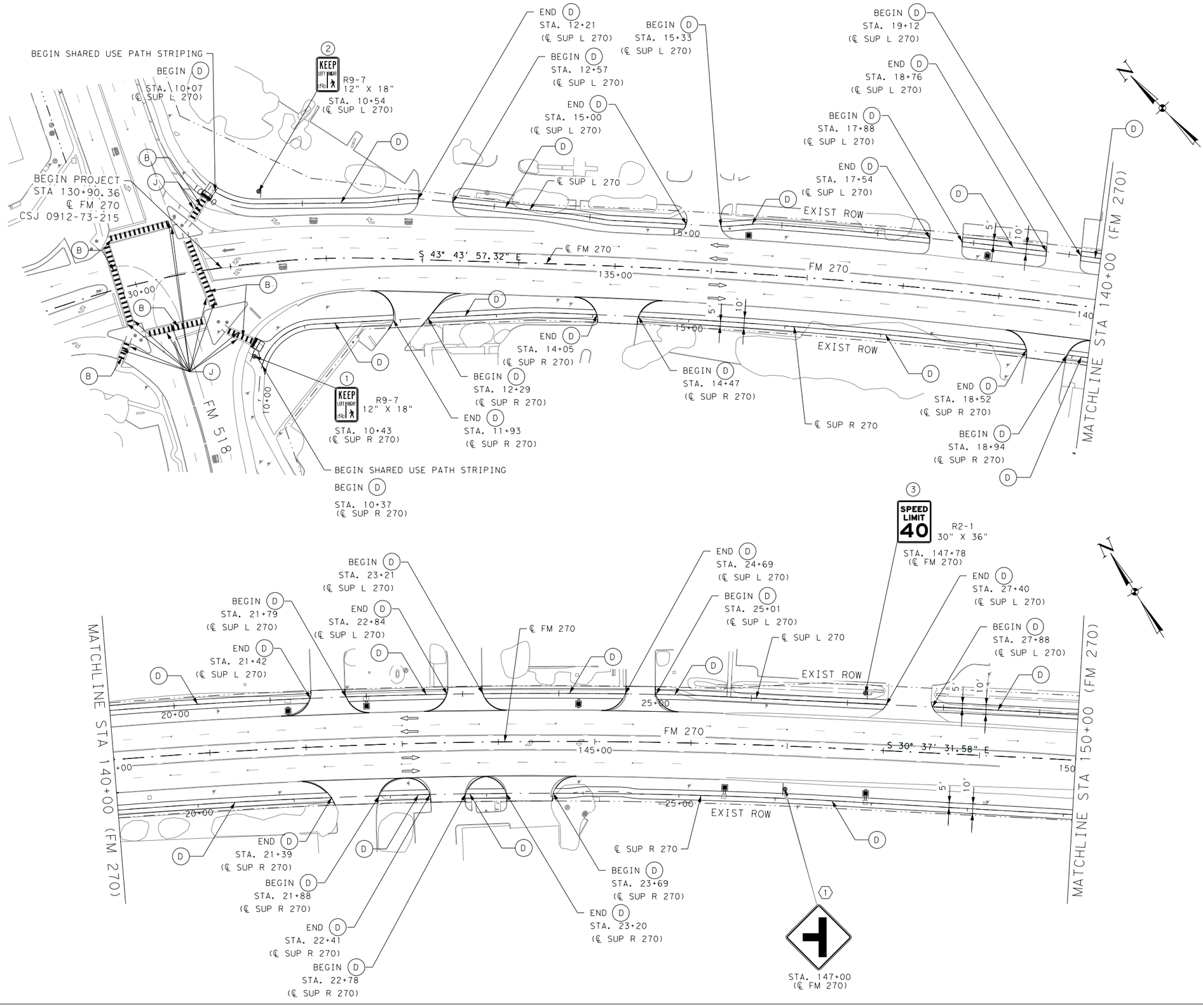

0′ 25′ 50′ 100′

LEGEND:

- (A) REFL PAV MRK TY I(W)8"(SLD)(100MIL)
- (B) REFL PAV MRK TY I(W)24"(SLD)(100MIL)
- (C) REFL PAV MRK TY I(W)(WORD)(100MIL)
- (D) RE PM W/RET REQ TY I(W)6"(SLD)(100MIL)
- (E) RE PM W/RET REQ TY I(Y)6"(BRK)(100MIL)
- (F) RE PM W/RET REQ TY I(Y)6"(SLD)(100MIL)
- (G) REFL PAV MRKR TY I-C
- (H) ELIM EXT PAVE MARK & MRKS (4")
- (I) ELIM EXT PAVE MARK & MRKS (8")
- (J) ELIM EXT PAVE MARK & MRKS (12")
- (K) ELIM EXT PAVE MARK & MRKS (24")
- (L) ELIM EXT PAVE MARK & MRKS (WORD)
- (M) PAV SURF PREP FOR MRK (6")
- DIRECTION OF TRAVEL (EXIST)
- PROPOSED SIGN
- EXISTING SIGN
- (#) PROPOSED SIGN
- (#) RELOCATE EXISTING SMALL SIGN
- (#) REMOVE SMALL SIGN

NOTE:
1. ALL EXISTING SIGNS TO REMAIN UNLESS OTHERWISE NOTED ON THE PLANS.

NO.	DATE	REVISION	APPROVED

STATE OF TEXAS
GREGORIO GARCIA
101077
LICENSED
PROFESSIONAL ENGINEER

07/26/2023

Texas Department of Transportation
©2023

SANCHEZ-SALAZAR & ASSOCIATES, LLC
12770 Cimarron Path, Ste. 118
San Antonio, TX 78249
Phone: (210) 314-5458
TBPELS Registration No. 15685

SH 96, FM 270 SIGNING AND PAVEMENT MARKING LAYOUT

BEGIN PROJECT TO STA 150+00

SHEET 1 OF 16

DRAWN	FED.RD. DIV.NO.	FEDERAL AID PROJECT NO.		HIGHWAY NO.
CM	06			FM 270,ETC
DESIGNED	STATE	DIST.	COUNTY	SHEET NO.
CM	TEXAS	HOUSTON	GALVESTON	300
CHECKED	CONT.	SECT.	JOB	
GG	0912	73	215	
APPROVED				
GG				

PLOTDRIVER: cpypdf_ANSIB.pltcfg PENTABLE:LCBF.tbl
DATE:7/26/2023 8:53:02 AM USER:Uvaldez
FILE:c:\bms\pwe101-01\uvaldo.valdez\dms22649\LCBF_PM01.dgn

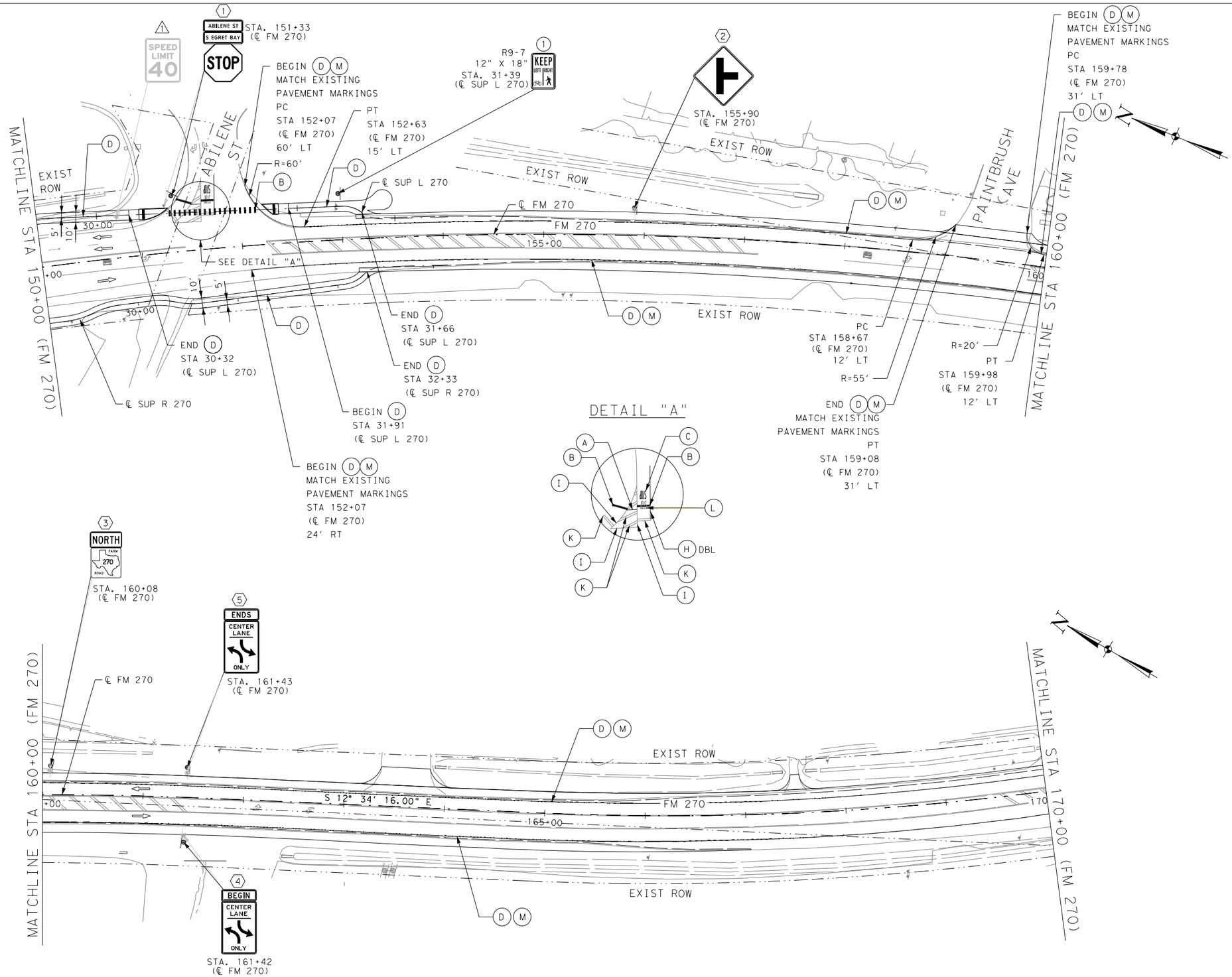

0' 25' 50' 100'

LEGEND:

- (A) REFL PAV MRK TY I(W)8"(SLD)(100MIL)
- (B) REFL PAV MRK TY I(W)24"(SLD)(100MIL)
- (C) REFL PAV MRK TY I(W)(WORD)(100MIL)
- (D) RE PM W/RET REQ TY I(W)6"(SLD)(100MIL)
- (E) RE PM W/RET REQ TY I(Y)6"(BRK)(100MIL)
- (F) RE PM W/RET REQ TY I(Y)6"(SLD)(100MIL)
- (G) REFL PAV MRKR TY I-C
- (H) ELIM EXT PAVE MARK & MRKS (4")
- (I) ELIM EXT PAVE MARK & MRKS (8")
- (J) ELIM EXT PAVE MARK & MRKS (12")
- (K) ELIM EXT PAVE MARK & MRKS (24")
- (L) ELIM EXT PAVE MARK & MRKS (WORD)
- (M) PAV SURF PREP FOR MRK (6")
- DIRECTION OF TRAVEL (EXIST)
- PROPOSED SIGN
- EXISTING SIGN
- (#) PROPOSED SIGN
- (#) RELOCATE EXISTING SMALL SIGN
- (#) REMOVE SMALL SIGN

NOTE:
1. ALL EXISTING SIGNS TO REMAIN UNLESS OTHERWISE NOTED ON THE PLANS.

NO.	DATE	REVISION	APPROVED

STATE OF TEXAS
GREGORIO GARCIA
101077
LICENSED
PROFESSIONAL ENGINEER

07/26/2023

Texas Department of Transportation
©2023

SANCHEZ-SALAZAR & ASSOCIATES, LLC
12770 Cimarron Path, Ste. 118
San Antonio, TX 78249
Phone: (210) 314-5458
TBPELS Registration No. 15685

SH 96, FM 270 SIGNING AND PAVEMENT MARKING LAYOUT

STA 150+00 TO STA 170+00

SHEET 2 OF 16

DRAWN	FED.RD. DIV.NO.	FEDERAL AID PROJECT NO.		HIGHWAY NO.
CM	06			FM 270,ETC
DESIGNED	STATE	DIST.	COUNTY	SHEET NO.
CM	TEXAS	HOUSTON	GALVESTON	301
CHECKED	CONT.	SECT.	JOB	
GG	0912	73	215	
APPROVED				
GG				

PLOTDRIVER: cpypdf_ANSIB.pltcfg PENTABLE: LCBF.tbl
DATE: 7/26/2023 8:53:05 AM USER: Uvaldez
FILE: c:\bms\pwe101-01\uvaldo.valdez\dms22649\LCBF_PM02.dgn

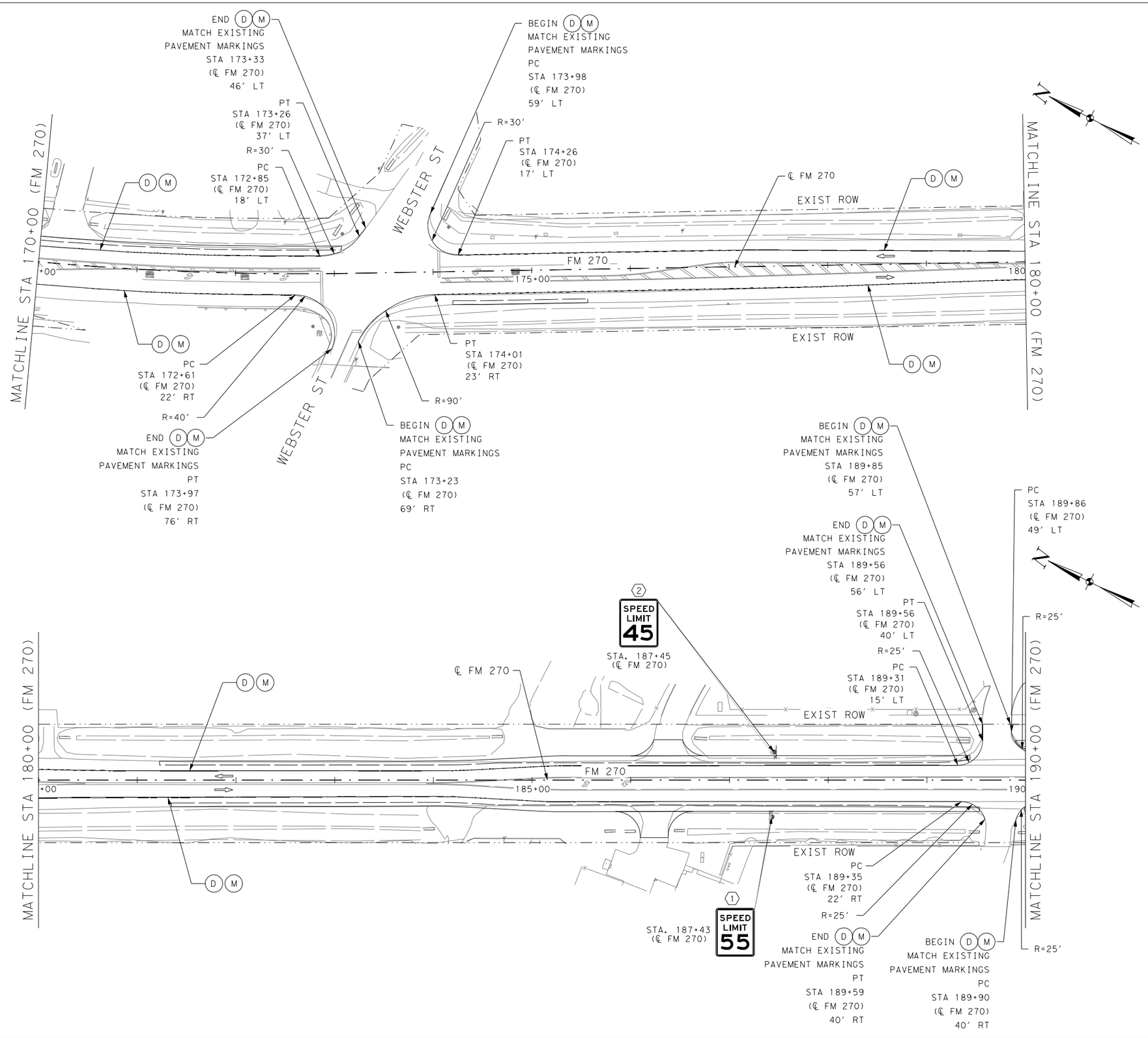

LEGEND:

- (A) REFL PAV MRK TY I(W)8"(SLD)(100MIL)
- (B) REFL PAV MRK TY I(W)24"(SLD)(100MIL)
- (C) REFL PAV MRK TY I(W)(WORD)(100MIL)
- (D) RE PM W/RET REQ TY I(W)6"(SLD)(100MIL)
- (E) RE PM W/RET REQ TY I(Y)6"(BRK)(100MIL)
- (F) RE PM W/RET REQ TY I(Y)6"(SLD)(100MIL)
- (G) REFL PAV MRKR TY I-C
- (H) ELIM EXT PAVE MARK & MRKS (4")
- (I) ELIM EXT PAVE MARK & MRKS (8")
- (J) ELIM EXT PAVE MARK & MRKS (12")
- (K) ELIM EXT PAVE MARK & MRKS (24")
- (L) ELIM EXT PAVE MARK & MRKS (WORD)
- (M) PAV SURF PREP FOR MRK (6")
- DIRECTION OF TRAVEL (EXIST)
- PROPOSED SIGN
- EXISTING SIGN
- (#) PROPOSED SIGN
- (#) RELOCATE EXISTING SMALL SIGN
- (#) REMOVE SMALL SIGN

NOTE:
1. ALL EXISTING SIGNS TO REMAIN UNLESS OTHERWISE NOTED ON THE PLANS.

NO.	DATE	REVISION	APPROVED

STATE OF TEXAS
GREGORIO GARCIA
101077
LICENSED
PROFESSIONAL ENGINEER

07/26/2023

Texas Department of Transportation
©2023

SANCHEZ-SALAZAR & ASSOCIATES, LLC
12770 Cimarron Path, Ste. 118
San Antonio, TX 78249
Phone: (210) 314-5458
TBPELS Registration No. 15685

SH 96, FM 270
SIGNING AND PAVEMENT MARKING LAYOUT
STA 170+00 TO STA 190+00

SHEET 3 OF 16

DRAWN	FED.RD. DIV.NO.	FEDERAL AID PROJECT NO.		HIGHWAY NO.
CM	06			FM 270, ETC
DESIGNED	STATE	DIST.	COUNTY	SHEET NO.
CM	TEXAS	HOUSTON	GALVESTON	302
CHECKED	CONT.	SECT.	JOB	
GG	0912	73	215	
APPROVED				
GG				

DATE:7/26/2023 8:53:07 AM USER:Uvaldez
FILE:c:\dms\pwe101-01\uvaldo.valdez\dms22649\LCBF_PM03.dgn
PLOTDRIVER: cpypdf_ANSIB.pltcfg PENTABLE:LCBF.tbl

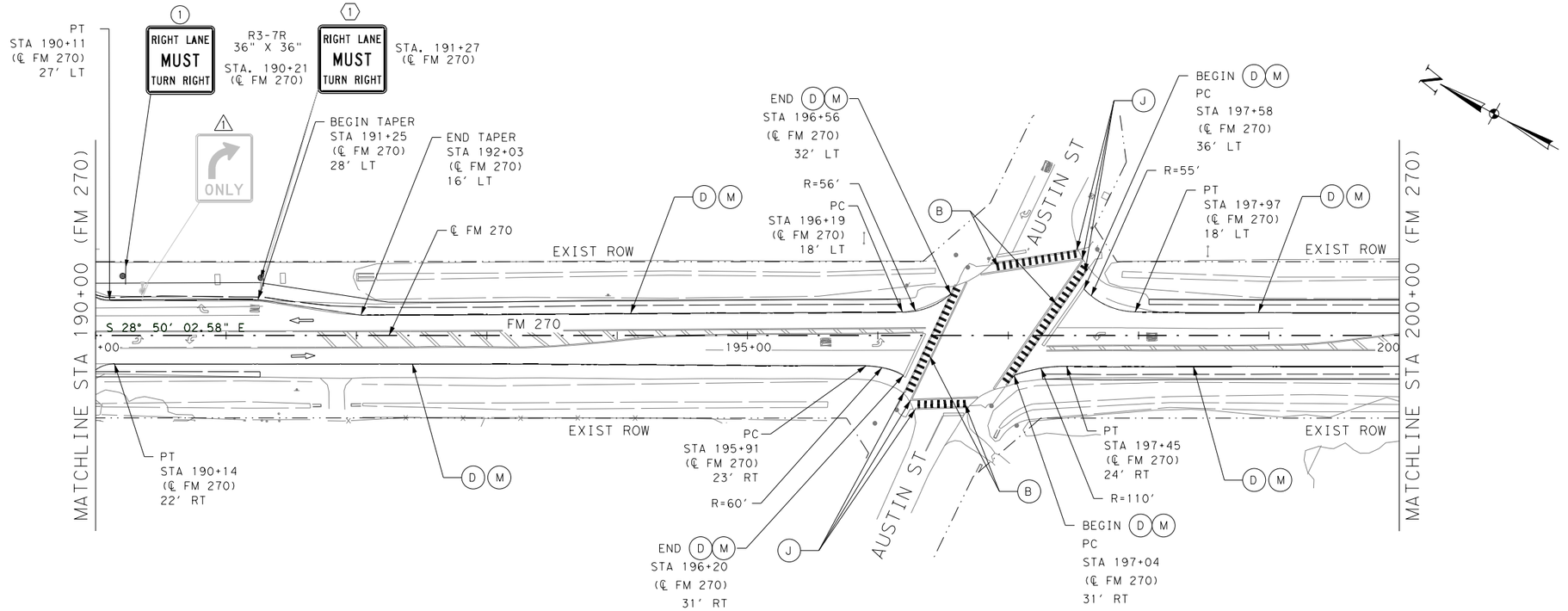

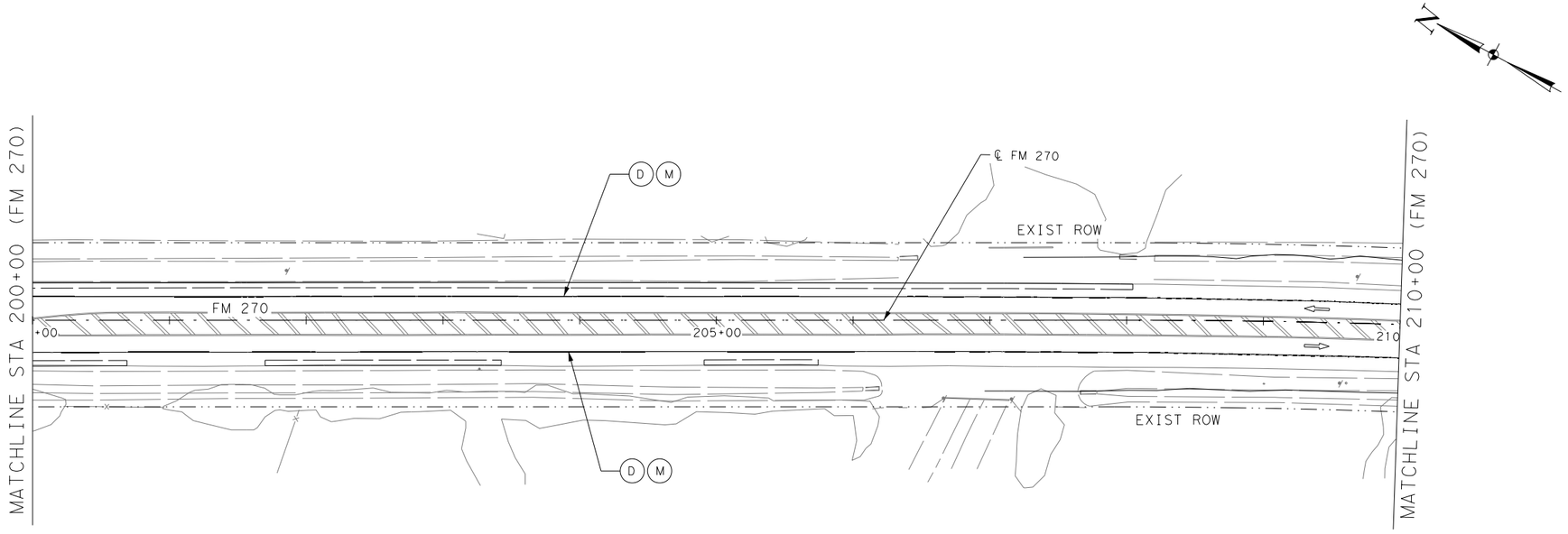

0' 25' 50' 100'

LEGEND:

- (A) REFL PAV MRK TY I(W)8"(SLD)(100MIL)
- (B) REFL PAV MRK TY I(W)24"(SLD)(100MIL)
- (C) REFL PAV MRK TY I(W)(WORD)(100MIL)
- (D) RE PM W/RET REQ TY I(W)6"(SLD)(100MIL)
- (E) RE PM W/RET REQ TY I(Y)6"(BRK)(100MIL)
- (F) RE PM W/RET REQ TY I(Y)6"(SLD)(100MIL)
- (G) REFL PAV MRKR TY I-C
- (H) ELIM EXT PAVE MARK & MRKS (4")
- (I) ELIM EXT PAVE MARK & MRKS (8")
- (J) ELIM EXT PAVE MARK & MRKS (12")
- (K) ELIM EXT PAVE MARK & MRKS (24")
- (L) ELIM EXT PAVE MARK & MRKS (WORD)
- (M) PAV SURF PREP FOR MRK (6")
- DIRECTION OF TRAVEL (EXIST)
- PROPOSED SIGN
- EXISTING SIGN
- (#) PROPOSED SIGN
- (#) RELOCATE EXISTING SMALL SIGN
- (#) REMOVE SMALL SIGN

NOTE:
1. ALL EXISTING SIGNS TO REMAIN UNLESS OTHERWISE NOTED ON THE PLANS.

NO.	DATE	REVISION	APPROVED

STATE OF TEXAS
GREGORIO GARCIA
101077
LICENSED
PROFESSIONAL ENGINEER

07/26/2023

Texas Department of Transportation
©2023

SANCHEZ-SALAZAR & ASSOCIATES, LLC
12770 Cimarron Path, Ste. 118
San Antonio, TX 78249
Phone: (210) 314-5458
TBPELS Registration No. 15685

SH 96, FM 270
SIGNING AND PAVEMENT MARKING LAYOUT
STA 190+00 TO STA 210+00

SHEET 4 OF 16

DRAWN	FED.RD. DIV.NO.	FEDERAL AID PROJECT NO.		HIGHWAY NO.
CM	06			FM 270,ETC
DESIGNED	STATE	DIST.	COUNTY	SHEET NO.
CM	TEXAS	HOUSTON	GALVESTON	303
CHECKED	CONT.	SECT.	JOB	
GG	0912	73	215	
APPROVED				
GG				

PLOTDRIVER: cpypdf_ANSIB.pltcfg
PENTABLE: LCBF.tbl
DATE: 7/26/2023 8:53:09 AM USER: Uvaldez
FILE: c:\bms\pwe101-01\uvaldo.valdez\dms22649\LCBF_PM04.dgn

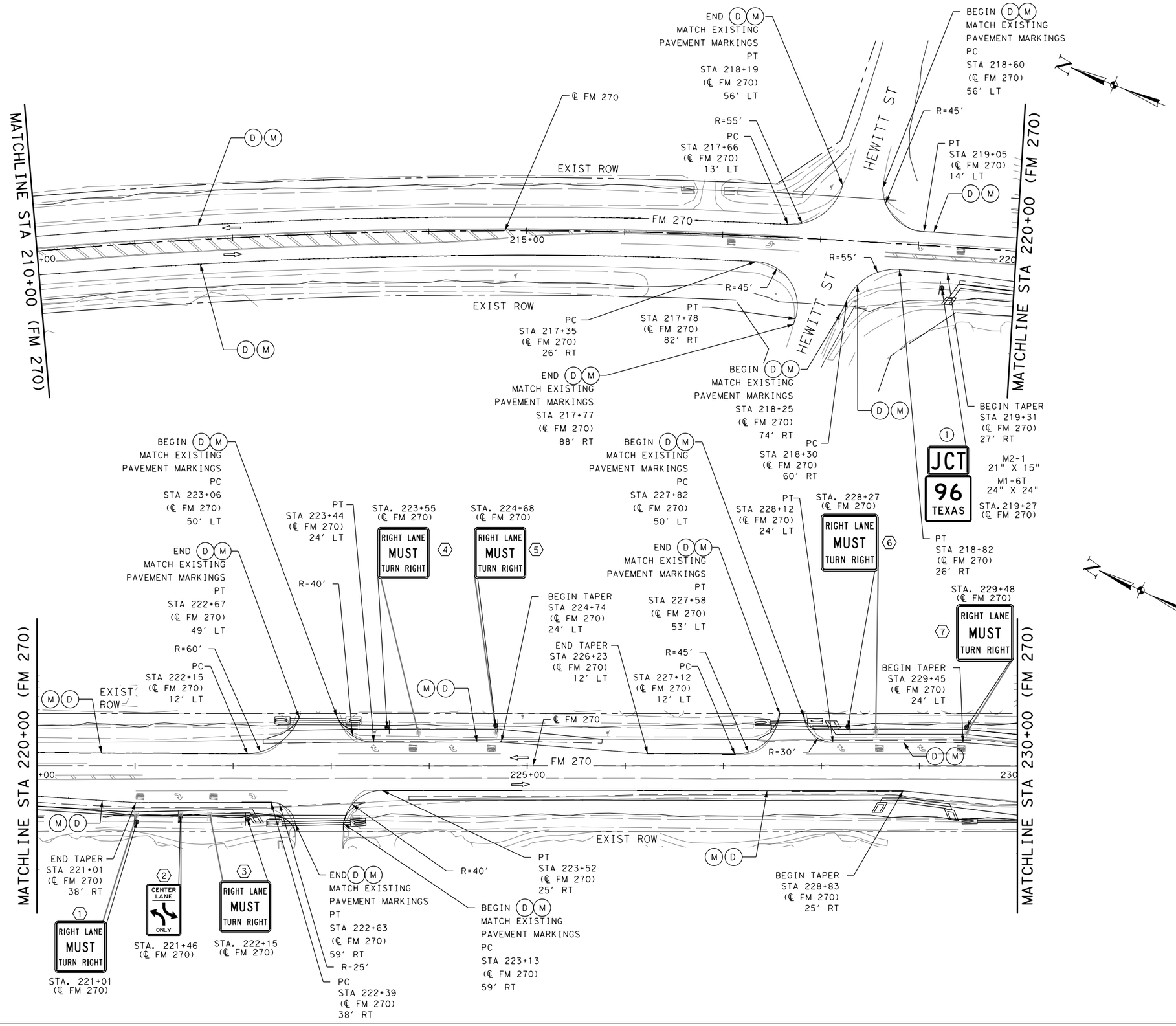

LEGEND:

- (A) REFL PAV MRK TY I(W)8"(SLD)(100MIL)
- (B) REFL PAV MRK TY I(W)24"(SLD)(100MIL)
- (C) REFL PAV MRK TY I(W)(WORD)(100MIL)
- (D) RE PM W/RET REQ TY I(W)6"(SLD)(100MIL)
- (E) RE PM W/RET REQ TY I(Y)6"(BRK)(100MIL)
- (F) RE PM W/RET REQ TY I(Y)6"(SLD)(100MIL)
- (G) REFL PAV MRKR TY I-C
- (H) ELIM EXT PAVE MARK & MRKS (4")
- (I) ELIM EXT PAVE MARK & MRKS (8")
- (J) ELIM EXT PAVE MARK & MRKS (12")
- (K) ELIM EXT PAVE MARK & MRKS (24")
- (L) ELIM EXT PAVE MARK & MRKS (WORD)
- (M) PAV SURF PREP FOR MRK (6")
- DIRECTION OF TRAVEL (EXIST)
- PROPOSED SIGN
- EXISTING SIGN
- (#) PROPOSED SIGN
- (#) RELOCATE EXISTING SMALL SIGN
- (#) REMOVE SMALL SIGN

NOTE:
1. ALL EXISTING SIGNS TO REMAIN UNLESS OTHERWISE NOTED ON THE PLANS.

NO.	DATE	REVISION	APPROVED

STATE OF TEXAS
GREGORIO GARCIA
101077
LICENSED
PROFESSIONAL ENGINEER

07/26/2023

Texas Department of Transportation
©2023

SANCHEZ-SALAZAR & ASSOCIATES, LLC
12770 Cimarron Path, Ste. 118
San Antonio, TX 78249
Phone: (210) 314-5458
TBPELS Registration No. 15685

SH 96, FM 270 SIGNING AND PAVEMENT MARKING LAYOUT

STA 210+00 TO STA 230+00

SHEET 5 OF 16

DRAWN	FED.RD. DIV.NO.	FEDERAL AID PROJECT NO.		HIGHWAY NO.
CM	06			FM 270, ETC
DESIGNED	STATE	DIST.	COUNTY	SHEET NO.
CM	TEXAS	HOUSTON	GALVESTON	304
CHECKED	CONT.	SECT.	JOB	
GG	0912	73	215	
APPROVED				
GG				

PENTABLE: LCBF.tbl
PLOTDRIVER: LCBF.pltcfg
DATE: 7/26/2023 8:54:58 AM USER: Uvaldez
FILE: c:\bms\pwe101-01\uvaldo.valdez\dms22649\LCBF_PM05.dgn

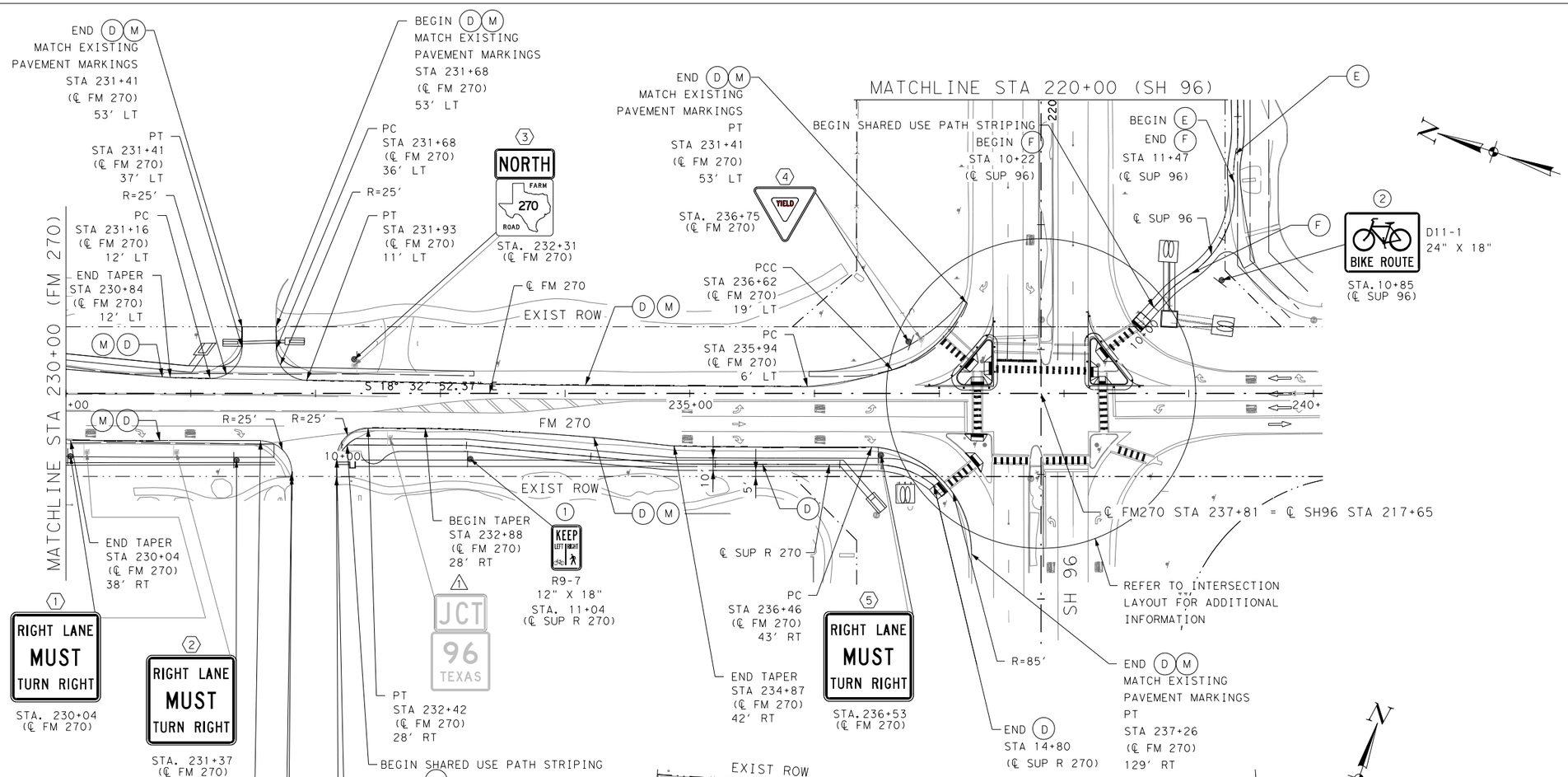

LEGEND:

- (A) REFL PAV MRK TY I(W)8"(SLD)(100MIL)
- (B) REFL PAV MRK TY I(W)24"(SLD)(100MIL)
- (C) REFL PAV MRK TY I(W)(WORD)(100MIL)
- (D) RE PM W/RET REQ TY I(W)6"(SLD)(100MIL)
- (E) RE PM W/RET REQ TY I(Y)6"(BRK)(100MIL)
- (F) RE PM W/RET REQ TY I(Y)6"(SLD)(100MIL)
- (G) REFL PAV MRKR TY I-C
- (H) ELIM EXT PAVE MARK & MRKS (4")
- (I) ELIM EXT PAVE MARK & MRKS (8")
- (J) ELIM EXT PAVE MARK & MRKS (12")
- (K) ELIM EXT PAVE MARK & MRKS (24")
- (L) ELIM EXT PAVE MARK & MRKS (WORD)
- (M) PAV SURF PREP FOR MRK (6")
- DIRECTION OF TRAVEL (EXIST)
- PROPOSED SIGN
- EXISTING SIGN
- (#) PROPOSED SIGN
- (#) RELOCATE EXISTING SMALL SIGN
- (A) REMOVE SMALL SIGN

NOTE:
1. ALL EXISTING SIGNS TO REMAIN UNLESS OTHERWISE NOTED ON THE PLANS.

NO.	DATE	REVISION	APPROVED

STATE OF TEXAS
GREGORIO GARCIA
101077
LICENSED
PROFESSIONAL ENGINEER

07/26/2023

©2023

Texas Department of Transportation

SANCHEZ-SALAZAR & ASSOCIATES, LLC
12770 Cimarron Path, Ste. 118
San Antonio, TX 78249
Phone: (210) 314-5458
TBPELS Registration No. 15685

SH 96, FM 270 SIGNING AND PAVEMENT MARKING LAYOUT

STA 230+00 TO END, BEGIN TO STA 225+00

DRAWN	FED.RD. DIV.NO.	FEDERAL AID PROJECT NO.		HIGHWAY NO.
CM	06			FM 270,ETC
DESIGNED	STATE	DIST.	COUNTY	SHEET NO.
CM	TEXAS	HOUSTON	GALVESTON	305
CHECKED	CONT.	SECT.	JOB	
GG	0912	73	215	
APPROVED				
GG				

DATE:7/26/2023 10:12:54 AM USER:Uvaldez
FILE:c:\bms\pwe101-01\uvaldo.valdez\dms22649\LCBF_PM06.dgn
PLOTDRIVER: cpypdf_ANSIB.pltcfg PENTABLE:LCBF.tbl

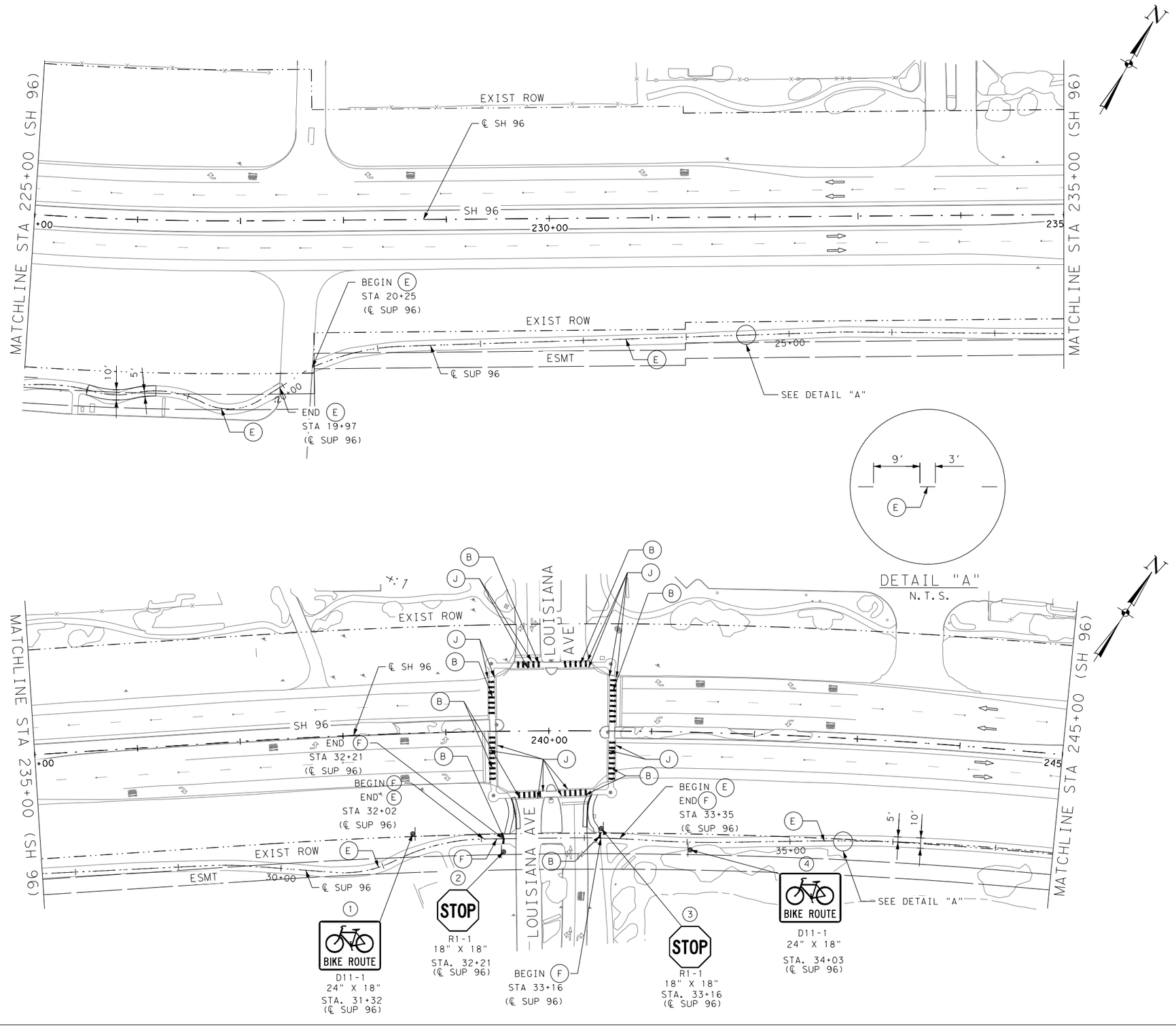

0' 25' 50' 100'

LEGEND:

- (A) REFL PAV MRK TY I(W)8"(SLD)(100MIL)
- (B) REFL PAV MRK TY I(W)24"(SLD)(100MIL)
- (C) REFL PAV MRK TY I(W)(WORD)(100MIL)
- (D) RE PM W/RET REQ TY I(W)6"(SLD)(100MIL)
- (E) RE PM W/RET REQ TY I(Y)6"(BRK)(100MIL)
- (F) RE PM W/RET REQ TY I(Y)6"(SLD)(100MIL)
- (G) REFL PAV MRKR TY I-C
- (H) ELIM EXT PAVE MARK & MRKS (4")
- (I) ELIM EXT PAVE MARK & MRKS (8")
- (J) ELIM EXT PAVE MARK & MRKS (12")
- (K) ELIM EXT PAVE MARK & MRKS (24")
- (L) ELIM EXT PAVE MARK & MRKS (WORD)
- (M) PAV SURF PREP FOR MRK (6")
- DIRECTION OF TRAVEL (EXIST)
- PROPOSED SIGN
- EXISTING SIGN
- (#) PROPOSED SIGN
- (#) RELOCATE EXISTING SMALL SIGN
- (#) REMOVE SMALL SIGN

NOTE:
1. ALL EXISTING SIGNS TO REMAIN UNLESS OTHERWISE NOTED ON THE PLANS.

NO.	DATE	REVISION	APPROVED

STATE OF TEXAS
GREGORIO GARCIA
101077
LICENSED
PROFESSIONAL ENGINEER

07/26/2023

Texas Department of Transportation
©2023

SANCHEZ-SALAZAR & ASSOCIATES, LLC
12770 Cimarron Path, Ste. 118
San Antonio, TX 78249
Phone: (210) 314-5458
TBPELS Registration No. 15685

SH 96 & FM 270
SIGNING AND PAVEMENT MARKING LAYOUT
STA 225+00 TO STA 245+00

SHEET 7 OF 16

DRAWN	FED.RD. DIV.NO.	FEDERAL AID PROJECT NO.		HIGHWAY NO.
CM	06			FM 270,ETC
DESIGNED	STATE	DIST.	COUNTY	SHEET NO.
CM	TEXAS	HOUSTON	GALVESTON	306
CHECKED	CONT.	SECT.	JOB	
GG	0912	73	215	
APPROVED				
GG				

PLOTDRIVER: cypdf_ANSIB.pltcfg PENTABLE: LCBF.tbl
DATE: 7/26/2023 8:53:13 AM USER: Uvaldez
FILE: c:\bms\pwe101-01\uvaldo.valdez\dms22649\LCBF_PM07.dgn

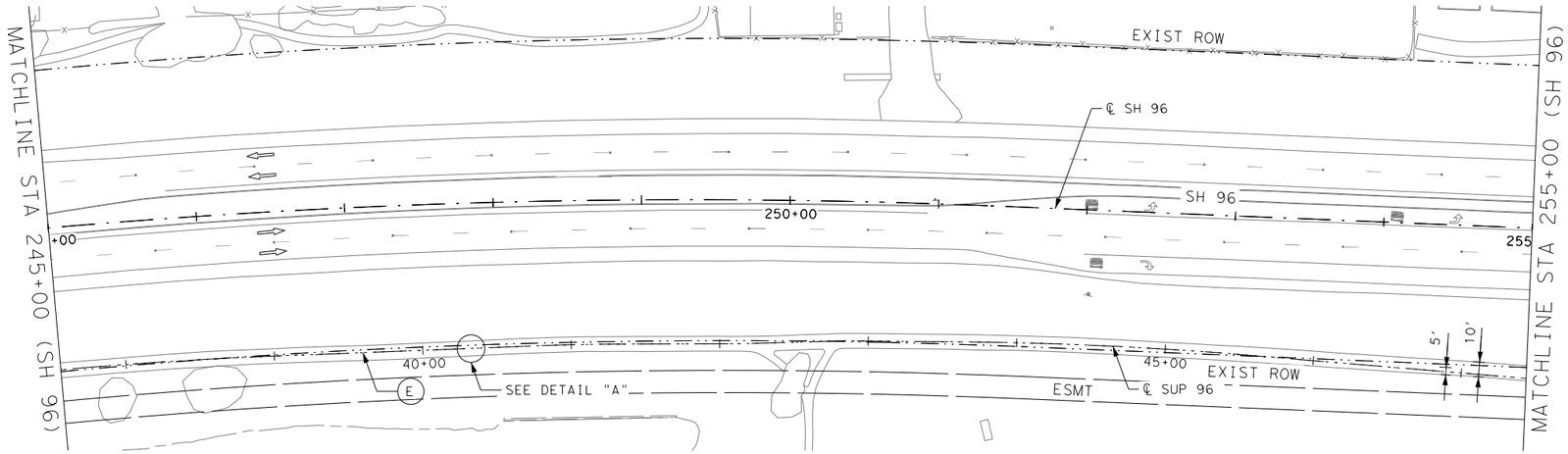

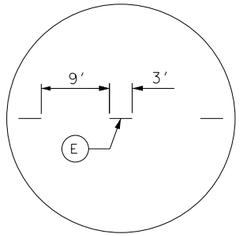

DETAIL "A"
N.T.S.

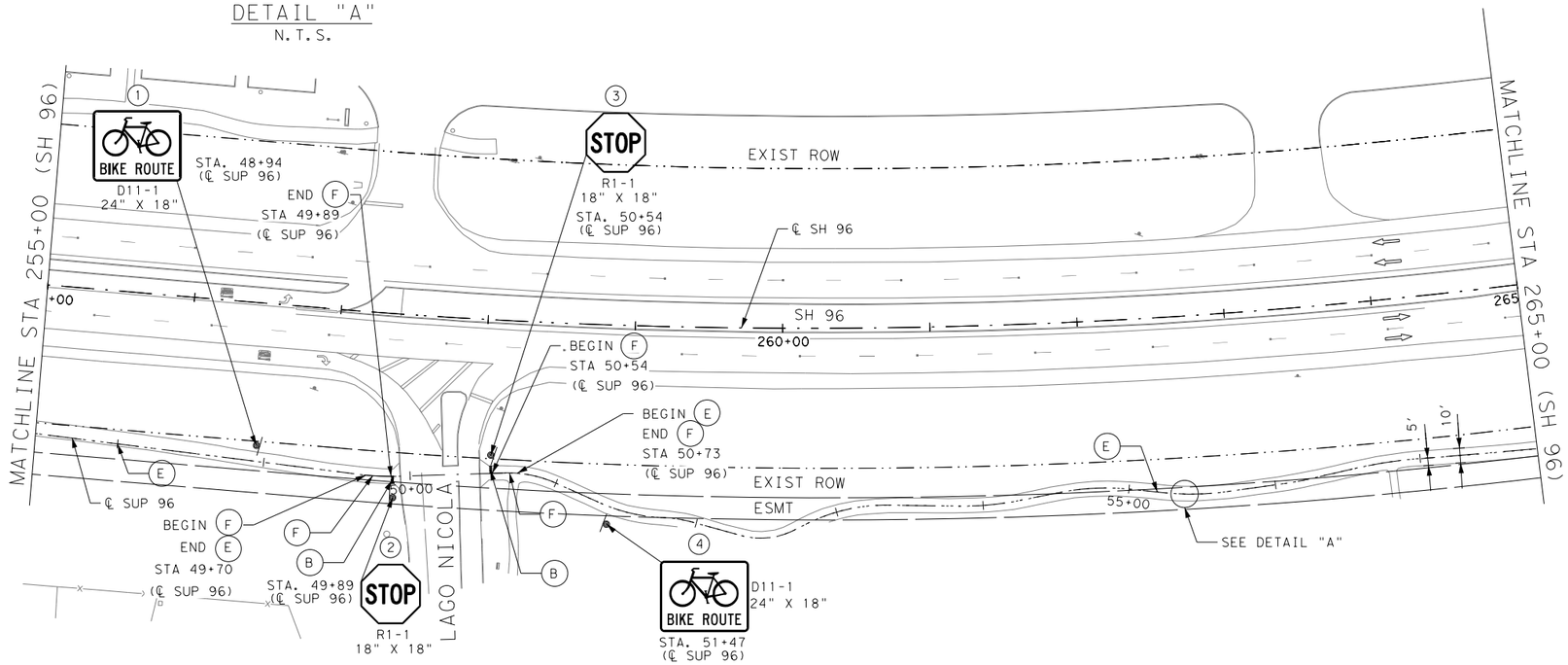

0' 25' 50' 100'

LEGEND:

- (A) REFL PAV MRK TY I(W)8"(SLD)(100MIL)
- (B) REFL PAV MRK TY I(W)24"(SLD)(100MIL)
- (C) REFL PAV MRK TY I(W)(WORD)(100MIL)
- (D) RE PM W/RET REQ TY I(W)6"(SLD)(100MIL)
- (E) RE PM W/RET REQ TY I(Y)6"(BRK)(100MIL)
- (F) RE PM W/RET REQ TY I(Y)6"(SLD)(100MIL)
- (G) REFL PAV MRKR TY I-C
- (H) ELIM EXT PAVE MARK & MRKS (4")
- (I) ELIM EXT PAVE MARK & MRKS (8")
- (J) ELIM EXT PAVE MARK & MRKS (12")
- (K) ELIM EXT PAVE MARK & MRKS (24")
- (L) ELIM EXT PAVE MARK & MRKS (WORD)
- (M) PAV SURF PREP FOR MRK (6")
- DIRECTION OF TRAVEL (EXIST)
- PROPOSED SIGN
- EXISTING SIGN
- (#) PROPOSED SIGN
- (#) RELOCATE EXISTING SMALL SIGN
- (#) REMOVE SMALL SIGN

NOTE:
1. ALL EXISTING SIGNS TO REMAIN UNLESS OTHERWISE NOTED ON THE PLANS.

NO.	DATE	REVISION	APPROVED

STATE OF TEXAS
GREGORIO GARCIA
101077
LICENSED
PROFESSIONAL ENGINEER

07/26/2023

Texas Department of Transportation
©2023

SANCHEZ-SALAZAR & ASSOCIATES, LLC
12770 Cimarron Path, Ste. 118
San Antonio, TX 78249
Phone: (210) 314-5458
TBPELS Registration No. 15685

SH 96 & FM 270 SIGNING AND PAVEMENT MARKING LAYOUT

STA 245+00 TO STA 265+00

SHEET 8 OF 16

DRAWN	FED.RD. DIV.NO.	FEDERAL AID PROJECT NO.		HIGHWAY NO.
CM	06			FM 270, ETC
DESIGNED	STATE	DIST.	COUNTY	SHEET NO.
CM	TEXAS	HOUSTON	GALVESTON	307
CHECKED	CONT.	SECT.	JOB	
GG	0912	73	215	
APPROVED				
GG				

PLOTDRIVER: cpypdf_ANSIB.pltcfg PENTABLE: LCBF.tbl
DATE: 7/26/2023 8:53:15 AM USER: Uvaldez
FILE: c:\bms\pwe101-01\uvaldo.valdez\dms22649\LCBF_PM08.dgn

PLOTDRIVER: cpypdf_ANSIB.pltcfg PENTABLE: LCBF.tbl
DATE: 7/26/2023 8:53:18 AM USER: Uvaldez
FILE: c:\bms\pwe101-01\uvaldo.valdez\dms22649\LCBF_PM09.dgn

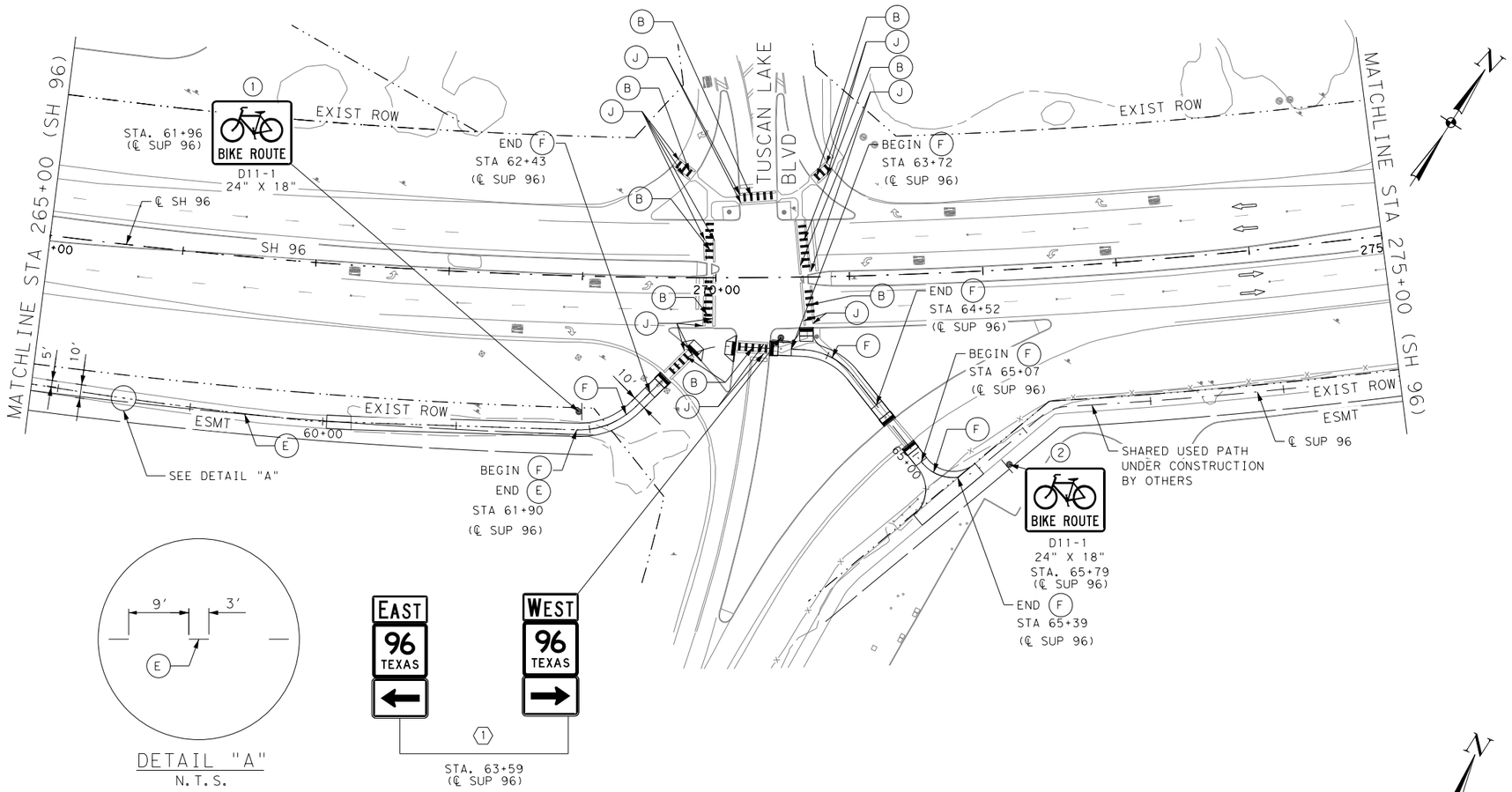

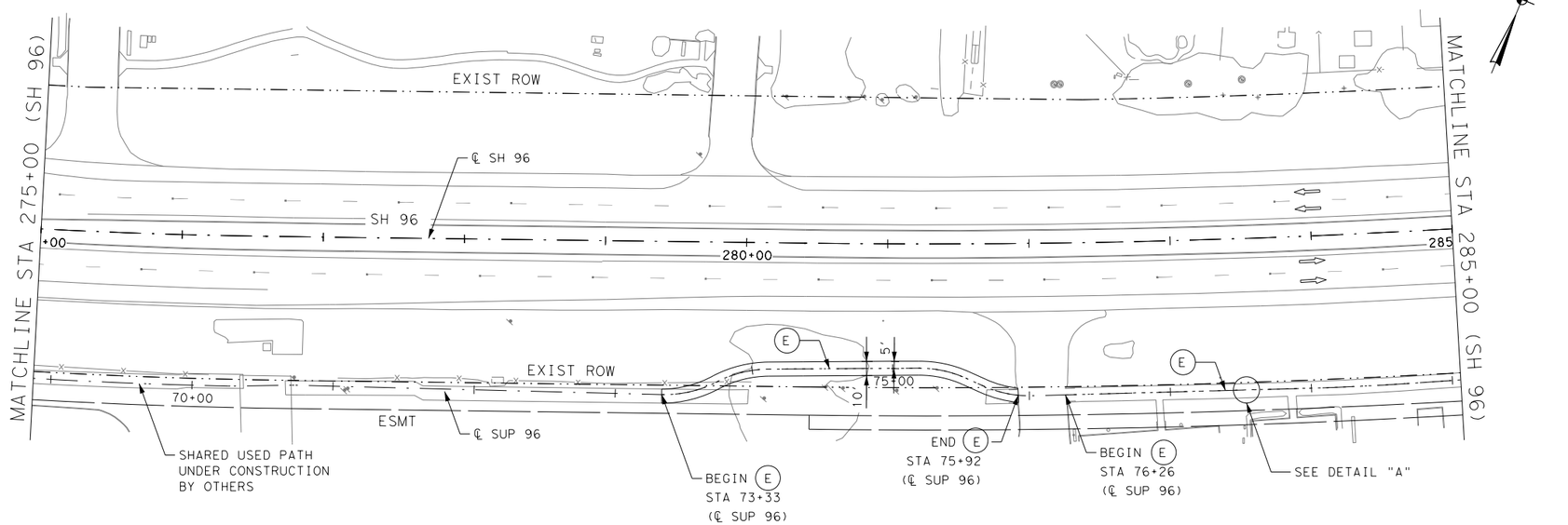

0' 25' 50' 100'

LEGEND:

- (A) REFL PAV MRK TY I(W)8"(SLD)(100MIL)
- (B) REFL PAV MRK TY I(W)24"(SLD)(100MIL)
- (C) REFL PAV MRK TY I(W)(WORD)(100MIL)
- (D) RE PM W/RET REQ TY I(W)6"(SLD)(100MIL)
- (E) RE PM W/RET REQ TY I(Y)6"(BRK)(100MIL)
- (F) RE PM W/RET REQ TY I(Y)6"(SLD)(100MIL)
- (G) REFL PAV MRKR TY I-C
- (H) ELIM EXT PAVE MARK & MRKS (4")
- (I) ELIM EXT PAVE MARK & MRKS (8")
- (J) ELIM EXT PAVE MARK & MRKS (12")
- (K) ELIM EXT PAVE MARK & MRKS (24")
- (L) ELIM EXT PAVE MARK & MRKS (WORD)
- (M) PAV SURF PREP FOR MRK (6")
- DIRECTION OF TRAVEL (EXIST)
- PROPOSED SIGN
- EXISTING SIGN
- (#) PROPOSED SIGN
- (#) RELOCATE EXISTING SMALL SIGN
- (#) REMOVE SMALL SIGN

NOTE:
1. ALL EXISTING SIGNS TO REMAIN UNLESS OTHERWISE NOTED ON THE PLANS.

NO.	DATE	REVISION	APPROVED

STATE OF TEXAS
GREGORIO GARCIA
101077
LICENSED PROFESSIONAL ENGINEER

07/26/2023

Texas Department of Transportation
©2023

SANCHEZ-SALAZAR & ASSOCIATES, LLC
12770 Cimarron Path, Ste. 118
San Antonio, TX 78249
Phone: (210) 314-5458
TBPELS Registration No. 15685

SH 96 & FM 270 SIGNING AND PAVEMENT MARKING LAYOUT

STA 265+00 TO STA 285+00

SHEET 9 OF 16

DRAWN	FED.RD. DIV.NO.	FEDERAL AID PROJECT NO.		HIGHWAY NO.
CM	06			FM 270, ETC
DESIGNED	STATE	DIST.	COUNTY	SHEET NO.
CM	TEXAS	HOUSTON	GALVESTON	308
CHECKED	CONT.	SECT.	JOB	
GG	0912	73	215	
APPROVED				
GG				

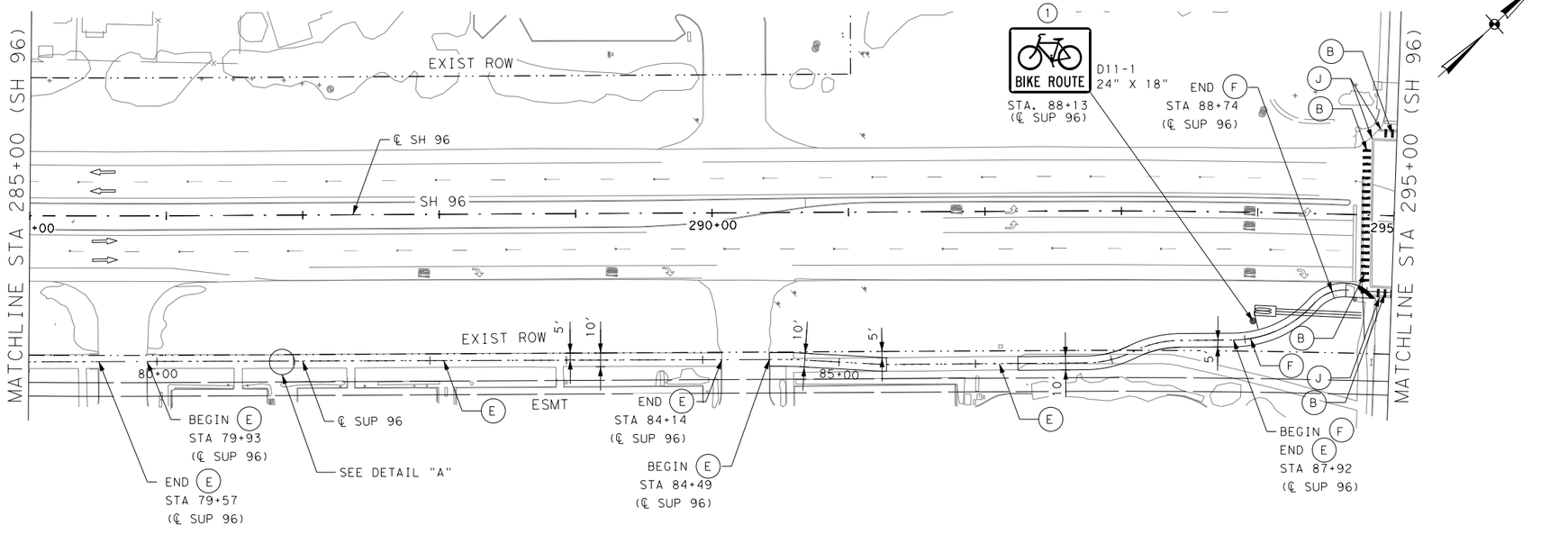

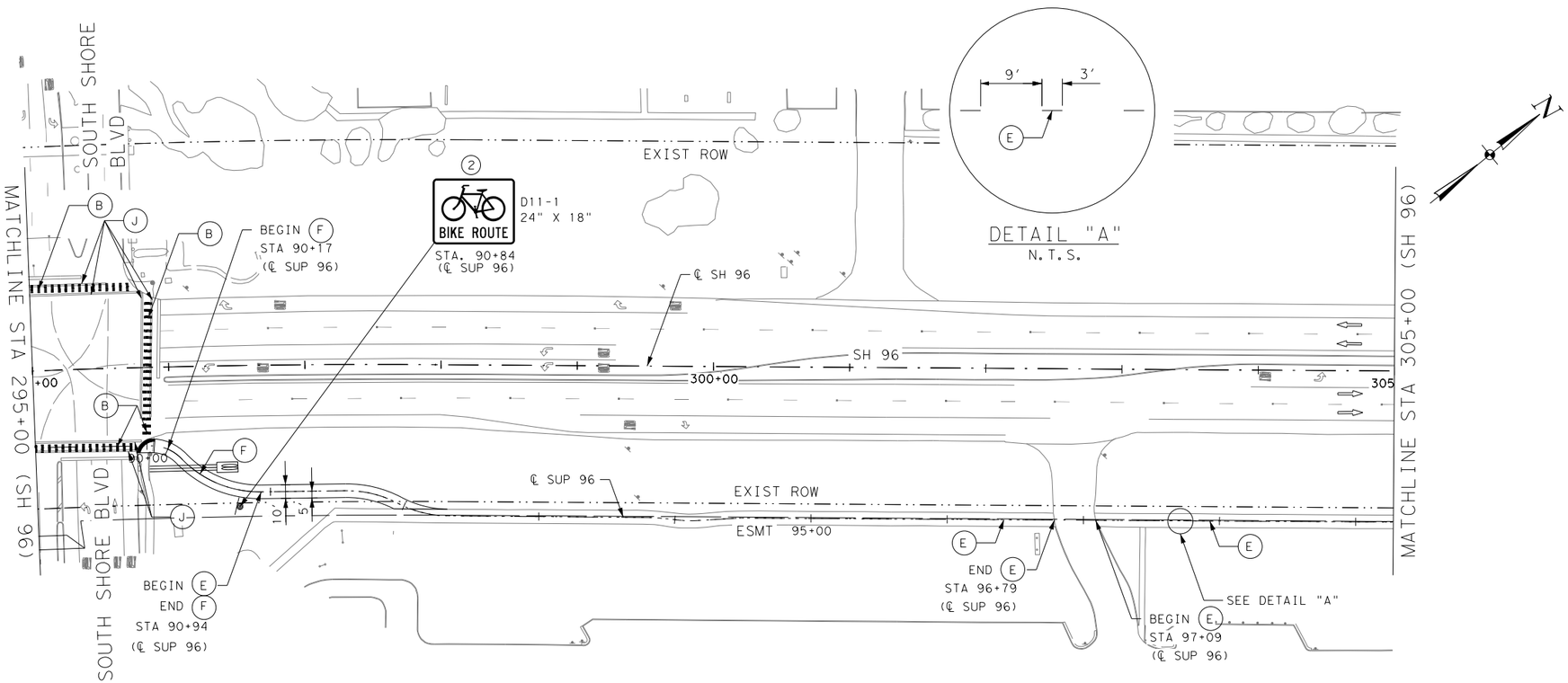

0' 25' 50' 100'

LEGEND:

- (A) REFL PAV MRK TY I(W)8"(SLD)(100MIL)
- (B) REFL PAV MRK TY I(W)24"(SLD)(100MIL)
- (C) REFL PAV MRK TY I(W)(WORD)(100MIL)
- (D) RE PM W/RET REQ TY I(W)6"(SLD)(100MIL)
- (E) RE PM W/RET REQ TY I(Y)6"(BRK)(100MIL)
- (F) RE PM W/RET REQ TY I(Y)6"(SLD)(100MIL)
- (G) REFL PAV MRKR TY I-C
- (H) ELIM EXT PAVE MARK & MRKS (4")
- (I) ELIM EXT PAVE MARK & MRKS (8")
- (J) ELIM EXT PAVE MARK & MRKS (12")
- (K) ELIM EXT PAVE MARK & MRKS (24")
- (L) ELIM EXT PAVE MARK & MRKS (WORD)
- (M) PAV SURF PREP FOR MRK (6")
- DIRECTION OF TRAVEL (EXIST)
- PROPOSED SIGN
- EXISTING SIGN
- (#) PROPOSED SIGN
- (#) RELOCATE EXISTING SMALL SIGN
- (#) REMOVE SMALL SIGN

NOTE:
1. ALL EXISTING SIGNS TO REMAIN UNLESS OTHERWISE NOTED ON THE PLANS.

NO.	DATE	REVISION	APPROVED

STATE OF TEXAS
GREGORIO GARCIA
101077
LICENSED
PROFESSIONAL ENGINEER

07/26/2023

Texas Department of Transportation
©2023

SANCHEZ-SALAZAR & ASSOCIATES, LLC
12770 Cimarron Path, Ste. 118
San Antonio, TX 78249
Phone: (210) 314-5458
TBPELS Registration No. 15685

SH 96 & FM 270
SIGNING AND PAVEMENT MARKING LAYOUT
STA 285+00 TO STA 305+00

SHEET 10 OF 16

DRAWN	FED.RD. DIV.NO.	FEDERAL AID PROJECT NO.		HIGHWAY NO.
CM	06			FM 270, ETC
DESIGNED	STATE	DIST.	COUNTY	SHEET NO.
CM	TEXAS	HOUSTON	GALVESTON	309
CHECKED	CONT.	SECT.	JOB	
GG	0912	73	215	
APPROVED				
GG				

PLOTDRIVER: cpypdf_ANSIB.pltcfg PENTABLE:LCBF.tbl
DATE:7/26/2023 8:53:22 AM USER:Uvaldez
FILE:c:\bms\pwe101-01\uvaldo.valdez\dms22649\LCBF_PM10.dgn

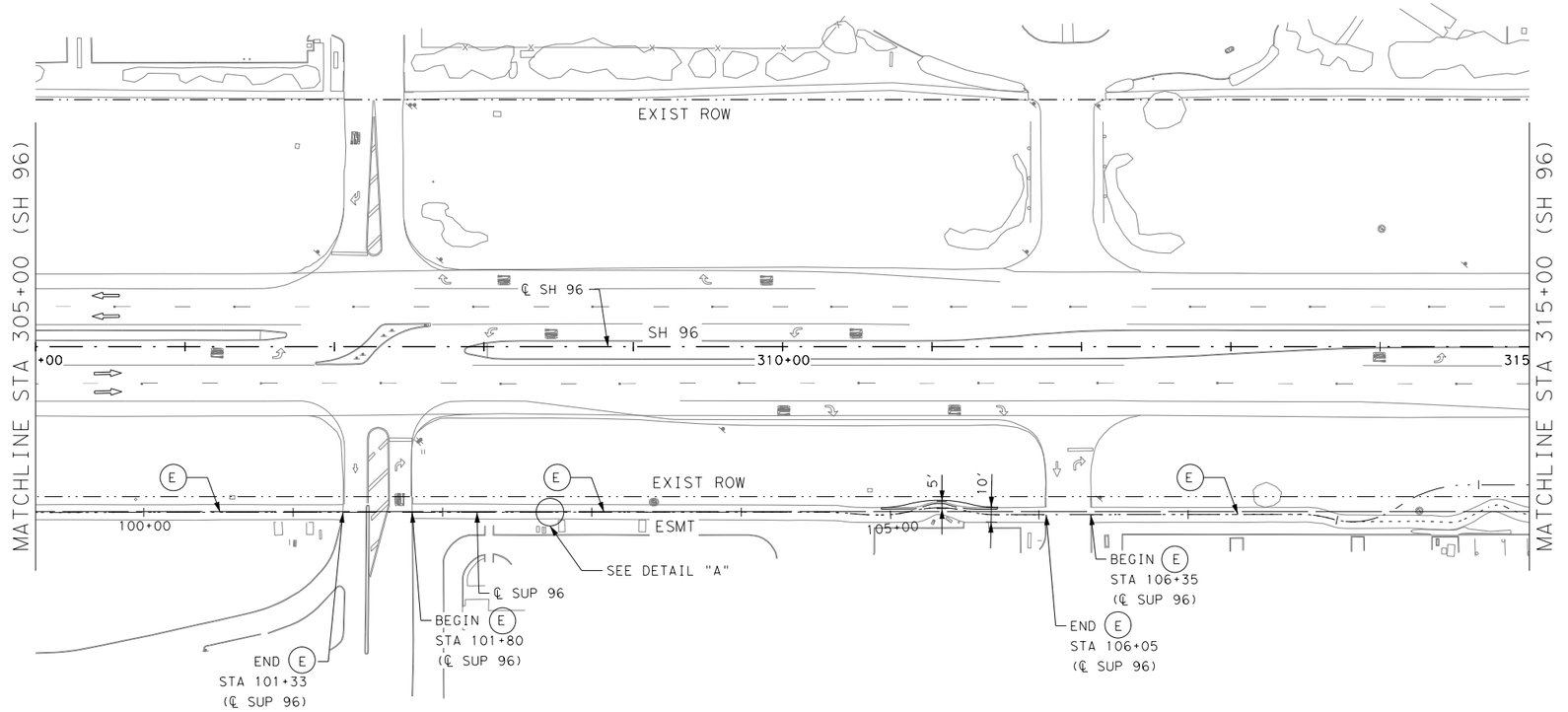

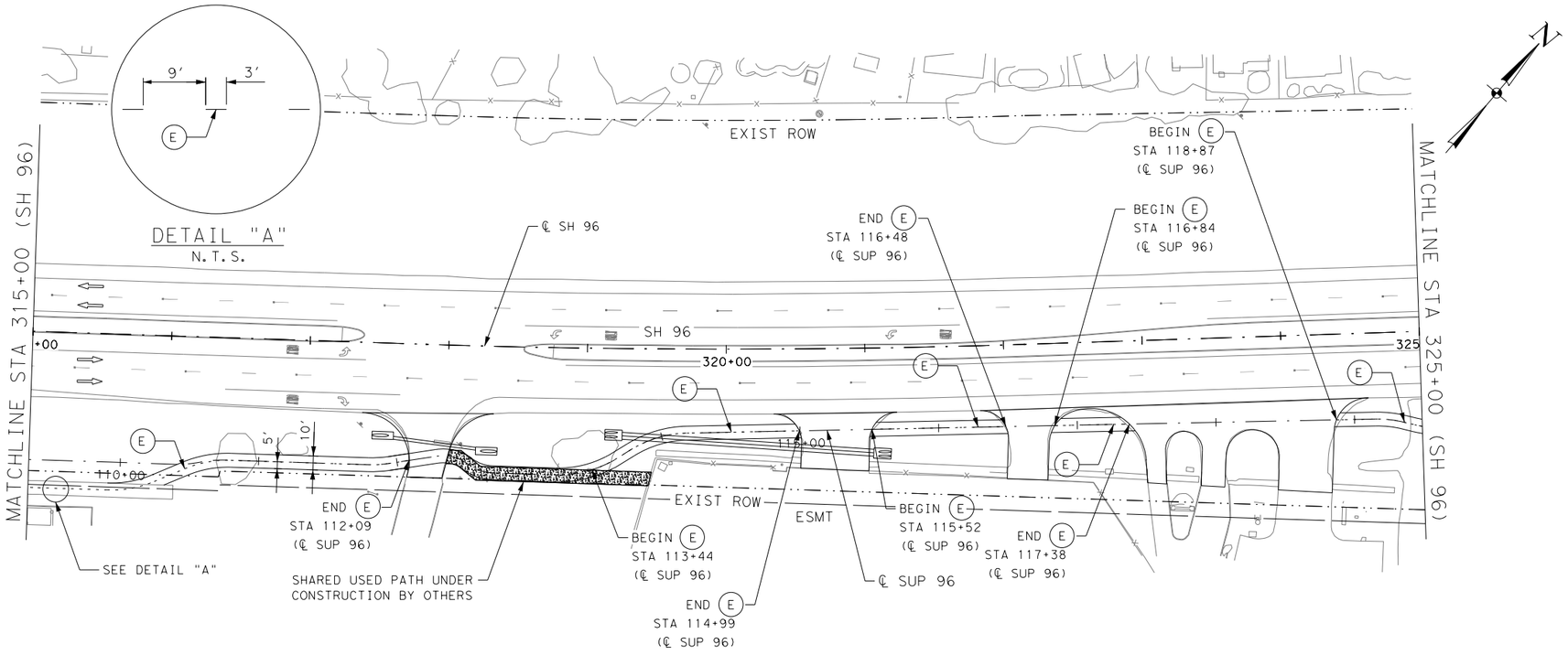

0' 25' 50' 100'

LEGEND:

- (A) REFL PAV MRK TY I(W)8"(SLD)(100MIL)
- (B) REFL PAV MRK TY I(W)24"(SLD)(100MIL)
- (C) REFL PAV MRK TY I(W)(WORD)(100MIL)
- (D) RE PM W/RET REQ TY I(W)6"(SLD)(100MIL)
- (E) RE PM W/RET REQ TY I(Y)6"(BRK)(100MIL)
- (F) RE PM W/RET REQ TY I(Y)6"(SLD)(100MIL)
- (G) REFL PAV MRKR TY I-C
- (H) ELIM EXT PAVE MARK & MRKS (4")
- (I) ELIM EXT PAVE MARK & MRKS (8")
- (J) ELIM EXT PAVE MARK & MRKS (12")
- (K) ELIM EXT PAVE MARK & MRKS (24")
- (L) ELIM EXT PAVE MARK & MRKS (WORD)
- (M) PAV SURF PREP FOR MRK (6")
- DIRECTION OF TRAVEL (EXIST)
- PROPOSED SIGN
- EXISTING SIGN
- (#) PROPOSED SIGN
- (#) RELOCATE EXISTING SMALL SIGN
- (#) REMOVE SMALL SIGN

NOTE:
1. ALL EXISTING SIGNS TO REMAIN UNLESS OTHERWISE NOTED ON THE PLANS.

NO.	DATE	REVISION	APPROVED

STATE OF TEXAS
GREGORIO GARCIA
101077
LICENSED
PROFESSIONAL ENGINEER

07/26/2023

Texas Department of Transportation
©2023

SANCHEZ-SALAZAR & ASSOCIATES, LLC
12770 Cimarron Path, Ste. 118
San Antonio, TX 78249
Phone: (210) 314-5458
TBPELS Registration No. 15685

SH 96 & FM 270 SIGNING AND PAVEMENT MARKING LAYOUT

STA 305+00 TO STA 325+00

SHEET 11 OF 16

DRAWN	FED.RD. DIV.NO.	FEDERAL AID PROJECT NO.		HIGHWAY NO.
CM	06			FM 270, ETC
DESIGNED	STATE	DIST.	COUNTY	SHEET NO.
CM	TEXAS	HOUSTON	GALVESTON	310
CHECKED	CONT.	SECT.	JOB	
GG	0912	73	215	
APPROVED				
GG				

PLOTDRIVER: cpypdf_ANSIB.pltcfg PENTABLE: LCBF.tbl
DATE: 7/26/2023 8:53:26 AM USER: Uvaldez
FILE: c:\bms\pwe101-01\uvaldo.valdez\dms22649\LCBF_PM11.dgn

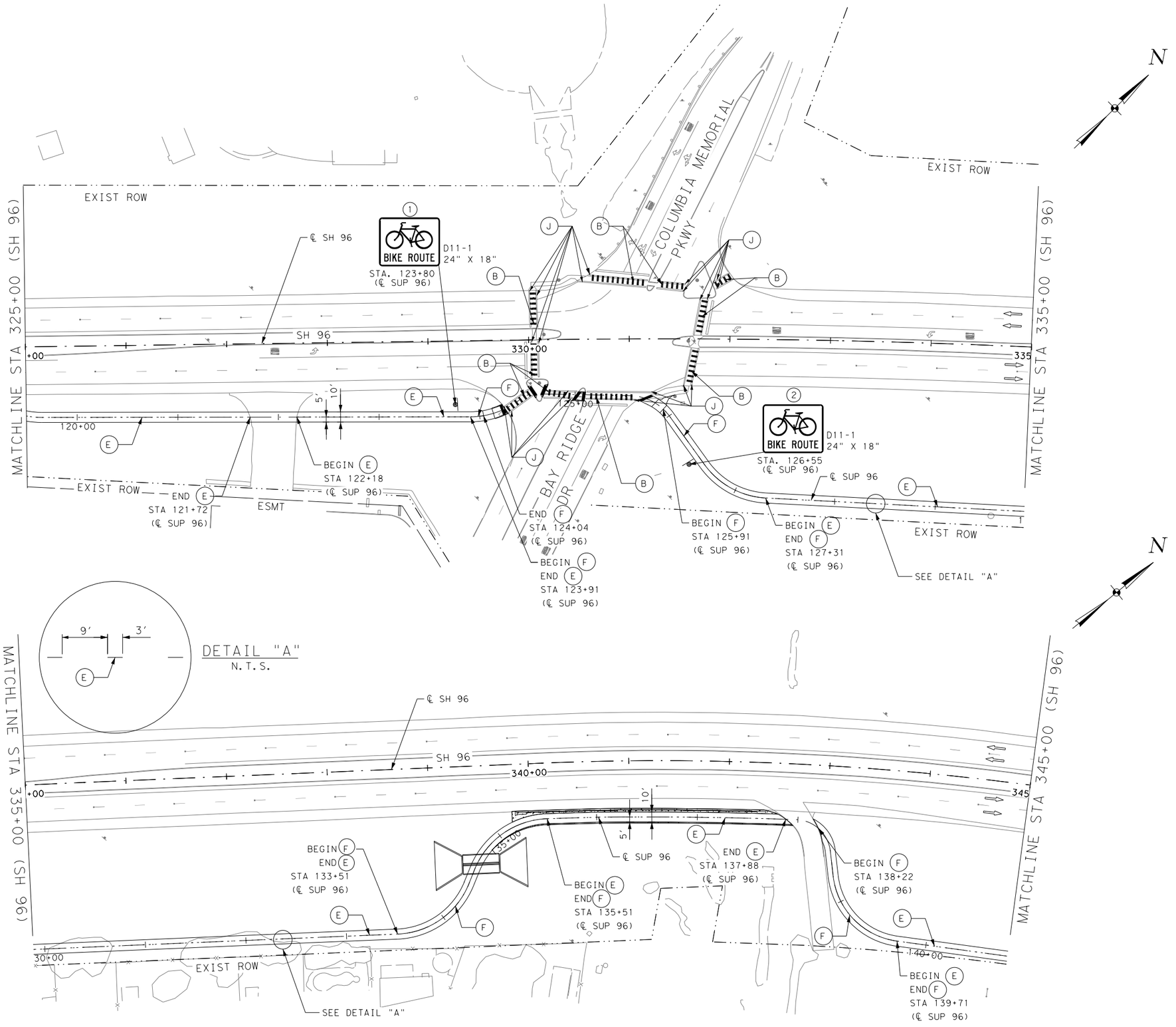

LEGEND:

- (A) REFL PAV MRK TY I(W)8"(SLD)(100MIL)
- (B) REFL PAV MRK TY I(W)24"(SLD)(100MIL)
- (C) REFL PAV MRK TY I(W)(WORD)(100MIL)
- (D) RE PM W/RET REQ TY I(W)6"(SLD)(100MIL)
- (E) RE PM W/RET REQ TY I(Y)6"(BRK)(100MIL)
- (F) RE PM W/RET REQ TY I(Y)6"(SLD)(100MIL)
- (G) REFL PAV MRKR TY I-C
- (H) ELIM EXT PAVE MARK & MRKS (4")
- (I) ELIM EXT PAVE MARK & MRKS (8")
- (J) ELIM EXT PAVE MARK & MRKS (12")
- (K) ELIM EXT PAVE MARK & MRKS (24")
- (L) ELIM EXT PAVE MARK & MRKS (WORD)
- (M) PAV SURF PREP FOR MRK (6")
- DIRECTION OF TRAVEL (EXIST)
- PROPOSED SIGN
- EXISTING SIGN
- (#) PROPOSED SIGN
- (#) RELOCATE EXISTING SMALL SIGN
- (#) REMOVE SMALL SIGN

NOTE:
1. ALL EXISTING SIGNS TO REMAIN UNLESS OTHERWISE NOTED ON THE PLANS.

NO.	DATE	REVISION	APPROVED

GREGORIO GARCIA
101077
LICENSED
PROFESSIONAL ENGINEER
STATE OF TEXAS

07/26/2023

Texas Department of Transportation
©2023

SANCHEZ-SALAZAR & ASSOCIATES, LLC
12770 Cimarron Path, Ste. 118
San Antonio, TX 78249
Phone: (210) 314-5458
TBPELS Registration No. 15685

SH 96 & FM 270
SIGNING AND PAVEMENT MARKING LAYOUT
STA 325+00 TO STA 345+00

SHEET 12 OF 16

DRAWN	FED.RD. DIV.NO.	FEDERAL AID PROJECT NO.		HIGHWAY NO.
CM	06			FM 270,ETC
DESIGNED	STATE	DIST.	COUNTY	SHEET NO.
CM	TEXAS	HOUSTON	GALVESTON	311
CHECKED	CONT.	SECT.	JOB	
GG	0912	73	215	
APPROVED				
GG				

PLOTDRIVER: cpypdf_ANSIB.pltcfg PENTABLE: LCBF.tbl
DATE: 7/26/2023 9:27:17 AM USER: Uvaldez
FILE: c:\bms\pwe101-01\uvaldo.valdez\dms22649\LCBF_PM12.dgn

PLOTDRIVER: cpypdf_ANSIB.pltcfg PENTABLE: LCBF.tbl
DATE: 7/26/2023 8:53:33 AM USER: Uvaldez
FILE: c:\bms\pwe101-01\uvaldo.valdez\dms22649\LCBF_PM13.dgn

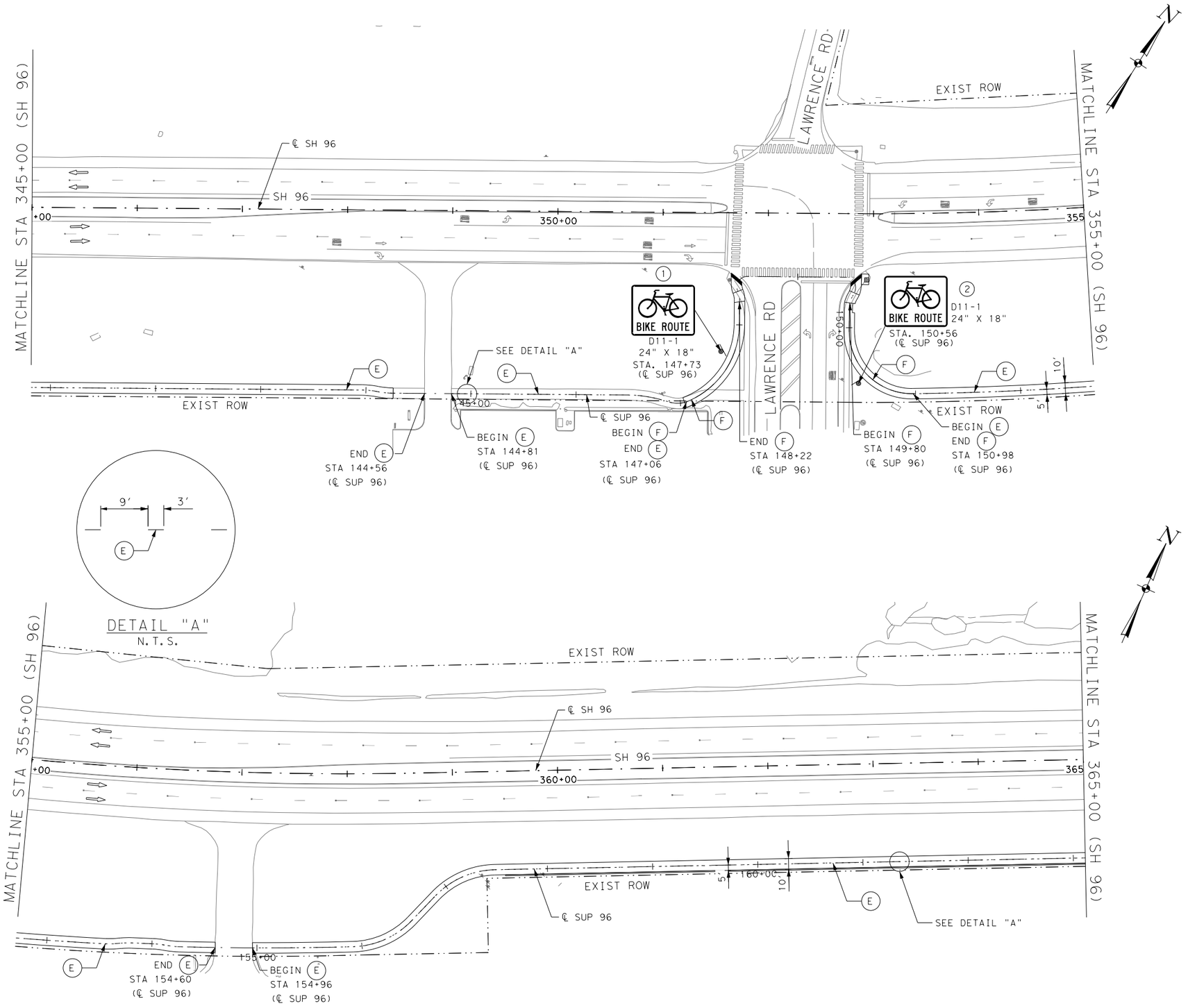

0' 25' 50' 100'

LEGEND:

- (A) REFL PAV MRK TY I(W)8"(SLD)(100MIL)
- (B) REFL PAV MRK TY I(W)24"(SLD)(100MIL)
- (C) REFL PAV MRK TY I(W)(WORD)(100MIL)
- (D) RE PM W/RET REQ TY I(W)6"(SLD)(100MIL)
- (E) RE PM W/RET REQ TY I(Y)6"(BRK)(100MIL)
- (F) RE PM W/RET REQ TY I(Y)6"(SLD)(100MIL)
- (G) REFL PAV MRKR TY I-C
- (H) ELIM EXT PAVE MARK & MRKS (4")
- (I) ELIM EXT PAVE MARK & MRKS (8")
- (J) ELIM EXT PAVE MARK & MRKS (12")
- (K) ELIM EXT PAVE MARK & MRKS (24")
- (L) ELIM EXT PAVE MARK & MRKS (WORD)
- (M) PAV SURF PREP FOR MRK (6")
- DIRECTION OF TRAVEL (EXIST)
- PROPOSED SIGN
- EXISTING SIGN
- (#) PROPOSED SIGN
- (#) RELOCATE EXISTING SMALL SIGN
- (#) REMOVE SMALL SIGN

NOTE:
1. ALL EXISTING SIGNS TO REMAIN UNLESS OTHERWISE NOTED ON THE PLANS.

NO.	DATE	REVISION	APPROVED

GREGORIO GARCIA
101077
LICENSED
PROFESSIONAL ENGINEER
STATE OF TEXAS

07/26/2023

Texas Department of Transportation
©2023

SANCHEZ-SALAZAR & ASSOCIATES, LLC
12770 Cimarron Path, Ste. 118
San Antonio, TX 78249
Phone: (210) 314-5458
TBPELS Registration No. 15685

SH 96 & FM 270 SIGNING AND PAVEMENT MARKING LAYOUT

STA 345+00 TO STA 365+00

SHEET 13 OF 16

DRAWN	FED.RD. DIV.NO.	FEDERAL AID PROJECT NO.		HIGHWAY NO.
CM	06			FM 270, ETC
DESIGNED	STATE	DIST.	COUNTY	SHEET NO.
CM	TEXAS	HOUSTON	GALVESTON	312
CHECKED	CONT.	SECT.	JOB	
GG	0912	73	215	
APPROVED				
GG				

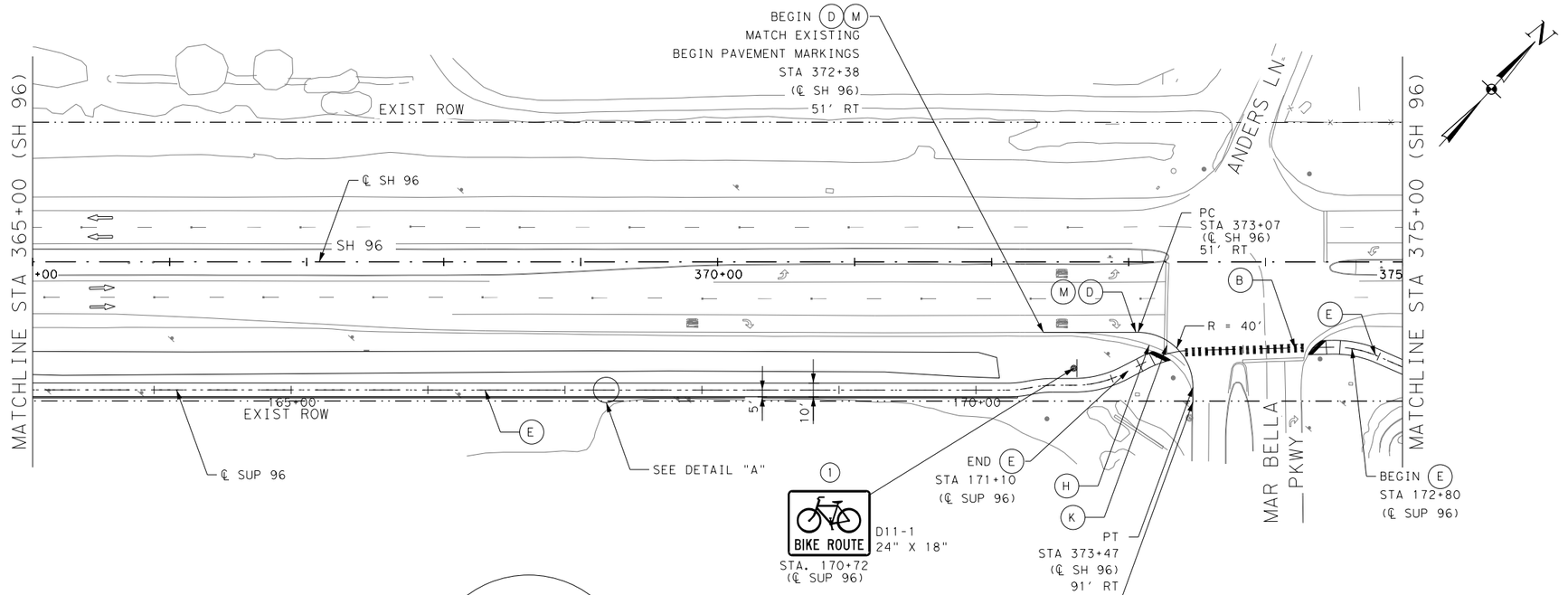

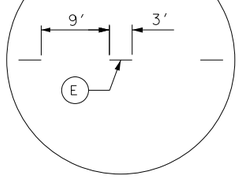

DETAIL "A"
N.T.S.

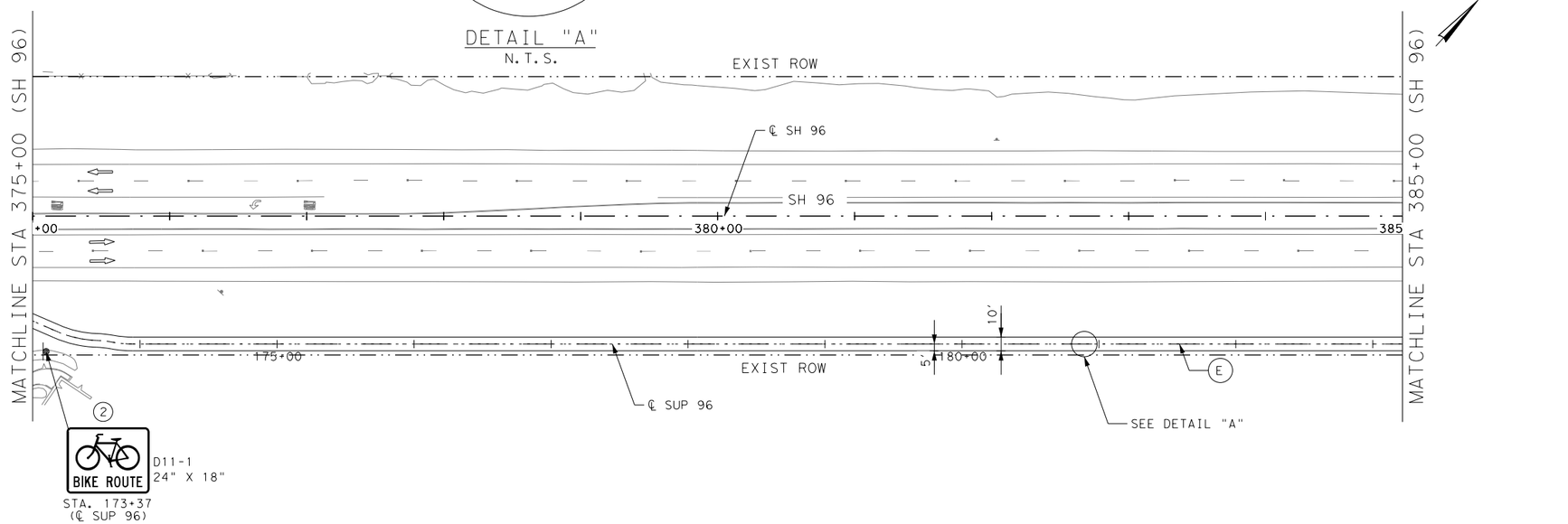

0' 25' 50' 100'

LEGEND:

- (A) REFL PAV MRK TY I(W)8"(SLD)(100MIL)
- (B) REFL PAV MRK TY I(W)24"(SLD)(100MIL)
- (C) REFL PAV MRK TY I(W)(WORD)(100MIL)
- (D) RE PM W/RET REQ TY I(W)6"(SLD)(100MIL)
- (E) RE PM W/RET REQ TY I(Y)6"(BRK)(100MIL)
- (F) RE PM W/RET REQ TY I(Y)6"(SLD)(100MIL)
- (G) REFL PAV MRKR TY I-C
- (H) ELIM EXT PAVE MARK & MRKS (4")
- (I) ELIM EXT PAVE MARK & MRKS (8")
- (J) ELIM EXT PAVE MARK & MRKS (12")
- (K) ELIM EXT PAVE MARK & MRKS (24")
- (L) ELIM EXT PAVE MARK & MRKS (WORD)
- (M) PAV SURF PREP FOR MRK (6")
- DIRECTION OF TRAVEL (EXIST)
- PROPOSED SIGN
- EXISTING SIGN
- (#) PROPOSED SIGN
- (#) RELOCATE EXISTING SMALL SIGN
- (#) REMOVE SMALL SIGN

NOTE:
1. ALL EXISTING SIGNS TO REMAIN UNLESS OTHERWISE NOTED ON THE PLANS.

NO.	DATE	REVISION	APPROVED

STATE OF TEXAS
GREGORIO GARCIA
101077
LICENSED PROFESSIONAL ENGINEER

07/26/2023

Texas Department of Transportation
©2023

SANCHEZ-SALAZAR & ASSOCIATES, LLC
12770 Cimarron Path, Ste. 118
San Antonio, TX 78249
Phone: (210) 314-5458
TBPELS Registration No. 15685

SH 96 & FM 270 SIGNING AND PAVEMENT MARKING LAYOUT

STA 365+00 TO STA 385+00

SHEET 14 OF 16

DRAWN	FED.RD. DIV.NO.	FEDERAL AID PROJECT NO.		HIGHWAY NO.
CM	06			FM 270, ETC
DESIGNED CM	STATE	DIST.	COUNTY	SHEET NO.
CHECKED GG	TEXAS	HOUSTON	GALVESTON	313
APPROVED GG	CONT.	SECT.	JOB	
	0912	73	215	

PLOTDRIVER: copydf_ANSIB.pltcfg PENTABLE:LCBF.tbl
DATE:7/26/2023 9:13:04 AM USER:Uvaldez
FILE:c:\bms\pwe101-01\uvaldo.valdez\dms22649\LCBF_PM14.dgn

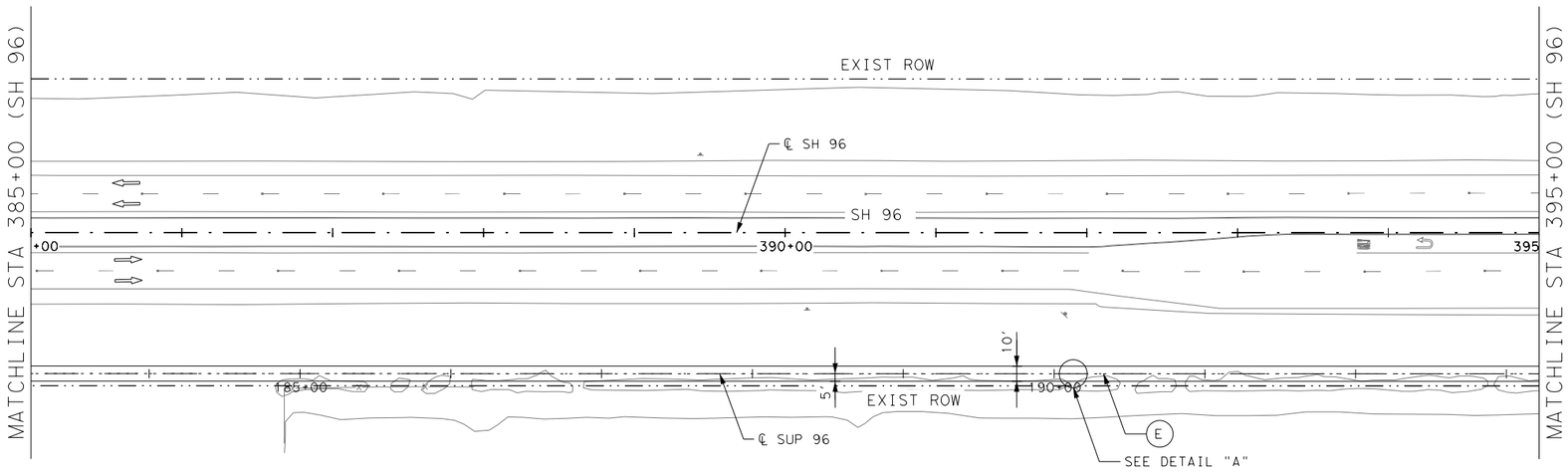

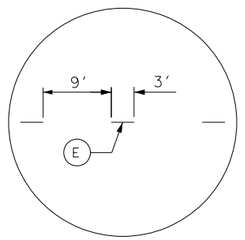

DETAIL "A"
N.T.S.

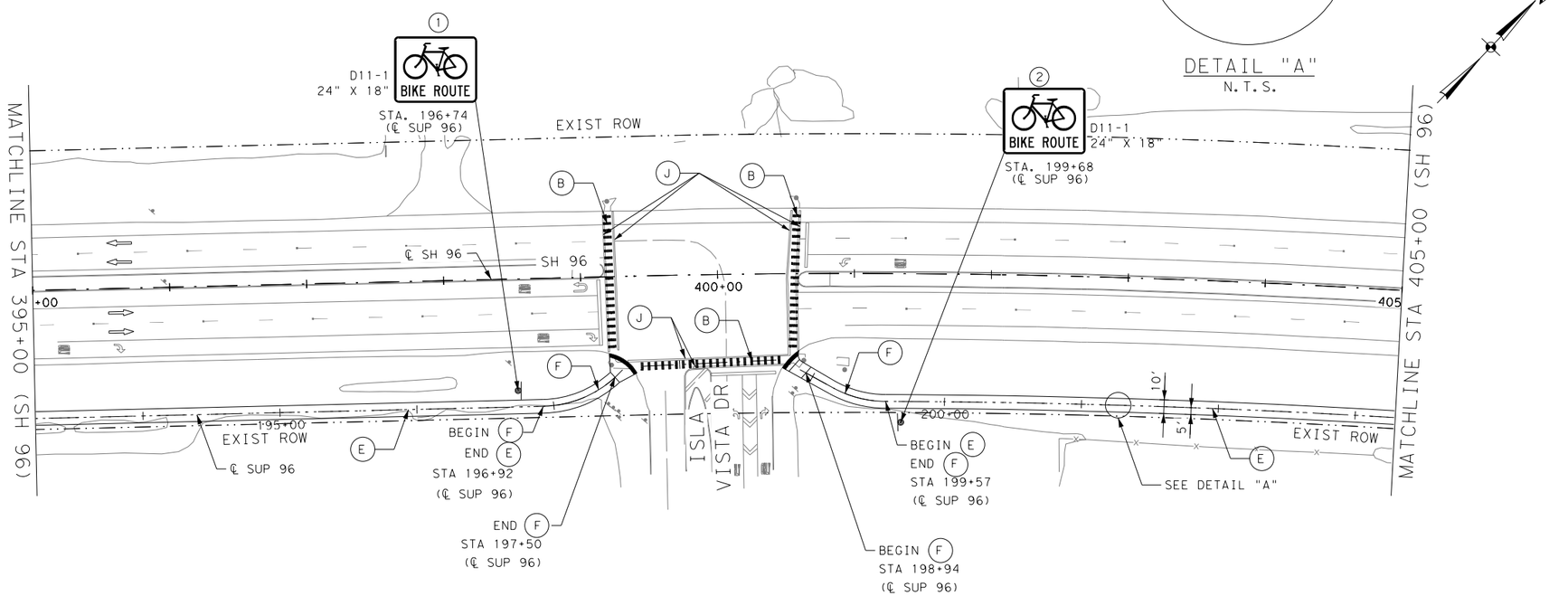

LEGEND:

- (A) REFL PAV MRK TY I(W)8"(SLD)(100MIL)
- (B) REFL PAV MRK TY I(W)24"(SLD)(100MIL)
- (C) REFL PAV MRK TY I(W)(WORD)(100MIL)
- (D) RE PM W/RET REQ TY I(W)6"(SLD)(100MIL)
- (E) RE PM W/RET REQ TY I(Y)6"(BRK)(100MIL)
- (F) RE PM W/RET REQ TY I(Y)6"(SLD)(100MIL)
- (G) REFL PAV MRKR TY I-C
- (H) ELIM EXT PAVE MARK & MRKS (4")
- (I) ELIM EXT PAVE MARK & MRKS (8")
- (J) ELIM EXT PAVE MARK & MRKS (12")
- (K) ELIM EXT PAVE MARK & MRKS (24")
- (L) ELIM EXT PAVE MARK & MRKS (WORD)
- (M) PAV SURF PREP FOR MRK (6")
- DIRECTION OF TRAVEL (EXIST)
- PROPOSED SIGN
- EXISTING SIGN
- (#) PROPOSED SIGN
- (#) RELOCATE EXISTING SMALL SIGN
- (#) REMOVE SMALL SIGN

NOTE:
1. ALL EXISTING SIGNS TO REMAIN UNLESS OTHERWISE NOTED ON THE PLANS.

NO.	DATE	REVISION	APPROVED

STATE OF TEXAS
GREGORIO GARCIA
101077
LICENSED
PROFESSIONAL ENGINEER

07/26/2023

Texas Department of Transportation
©2023

SANCHEZ-SALAZAR & ASSOCIATES, LLC
12770 Cimarron Path, Ste. 118
San Antonio, TX 78249
Phone: (210) 314-5458
TBPELS Registration No. 15685

SH 96 & FM 270
SIGNING AND PAVEMENT MARKING LAYOUT
STA 385+00 TO STA 405+00

DRAWN	FED.RD. DIV.NO.	FEDERAL AID PROJECT NO.		HIGHWAY NO.
CM	06			FM 270,ETC
DESIGNED	STATE	DIST.	COUNTY	SHEET NO.
CM	TEXAS	HOUSTON	GALVESTON	314
CHECKED	CONT.	SECT.	JOB	
GG	0912	73	215	
APPROVED				
GG				

DATE:7/26/2023 8:53:42 AM USER:Uvaldez
FILE:c:\bms\pwe101-01\uvaldo.valdez\dms22649\LCBF_PM15.dgn
PLOTDRIVER: cypdf_ANSIB.pltcfg PENTABLE:LCBF.tbl

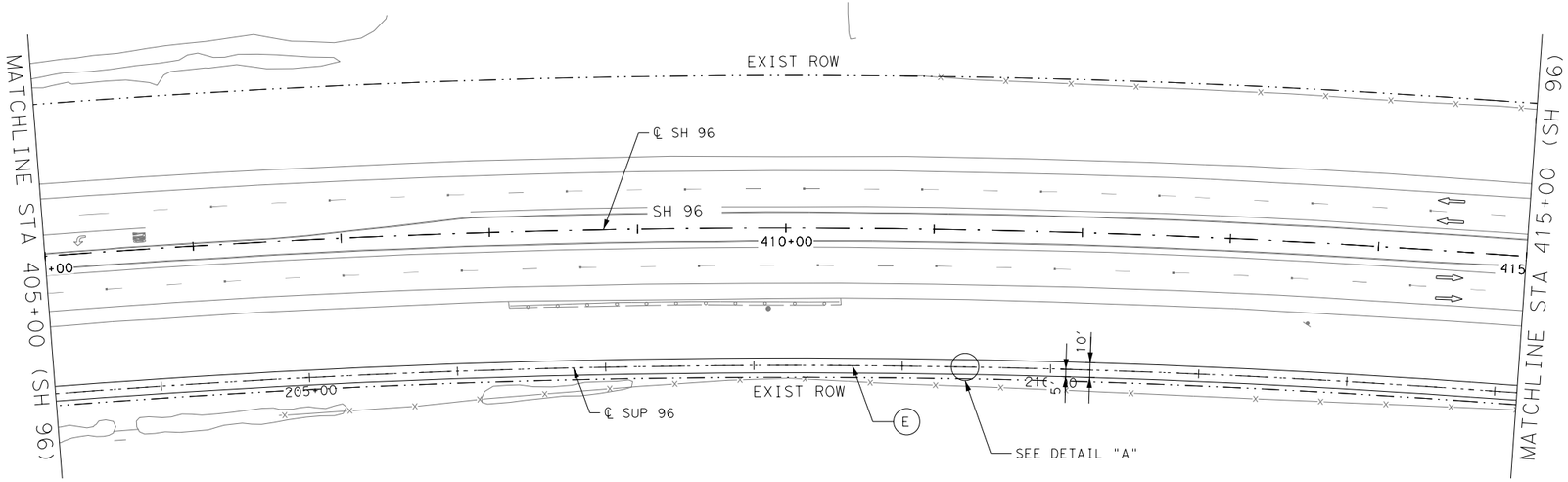

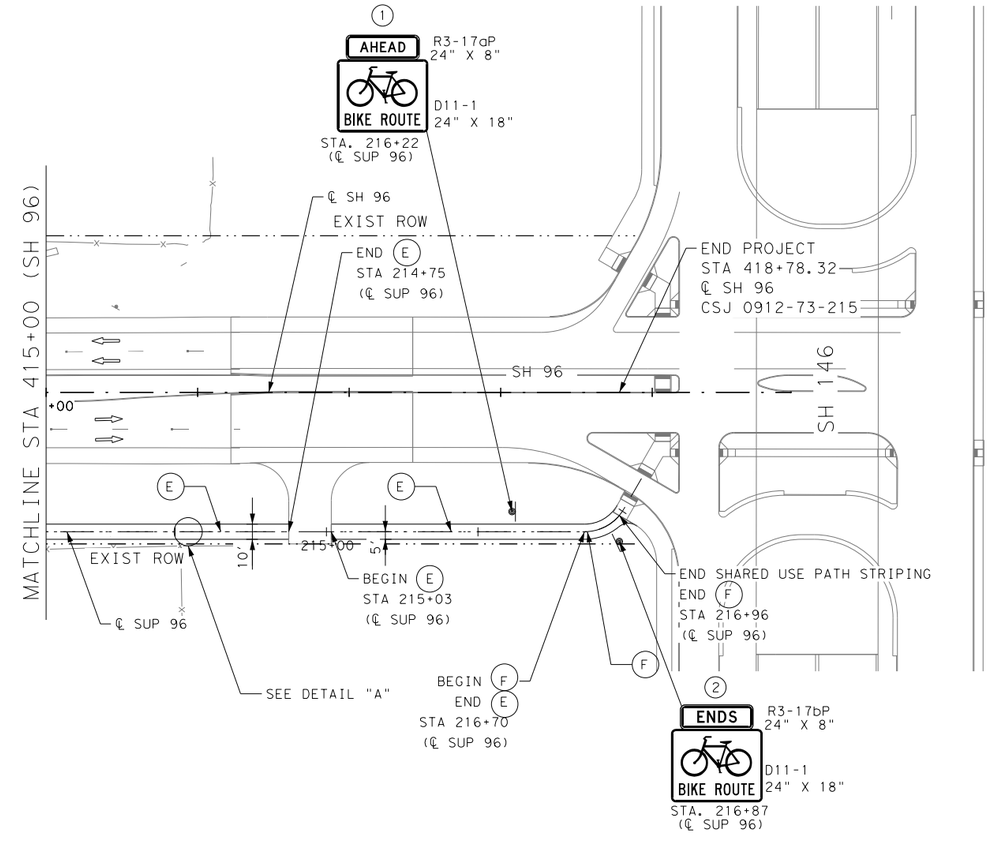

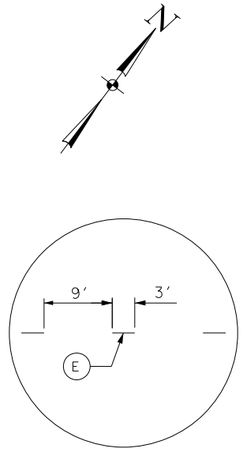

DETAIL "A"
N.T.S.

0' 25' 50' 100'

LEGEND:

- (A) REFL PAV MRK TY I(W)8"(SLD)(100MIL)
- (B) REFL PAV MRK TY I(W)24"(SLD)(100MIL)
- (C) REFL PAV MRK TY I(W)(WORD)(100MIL)
- (D) RE PM W/RET REQ TY I(W)6"(SLD)(100MIL)
- (E) RE PM W/RET REQ TY I(Y)6"(BRK)(100MIL)
- (F) RE PM W/RET REQ TY I(Y)6"(SLD)(100MIL)
- (G) REFL PAV MRKR TY I-C
- (H) ELIM EXT PAVE MARK & MRKS (4")
- (I) ELIM EXT PAVE MARK & MRKS (8")
- (J) ELIM EXT PAVE MARK & MRKS (12")
- (K) ELIM EXT PAVE MARK & MRKS (24")
- (L) ELIM EXT PAVE MARK & MRKS (WORD)
- (M) PAV SURF PREP FOR MRK (6")
- DIRECTION OF TRAVEL (EXIST)
- PROPOSED SIGN
- EXISTING SIGN
- (#) PROPOSED SIGN
- (#) RELOCATE EXISTING SMALL SIGN
- (#) REMOVE SMALL SIGN

NOTE:
1. ALL EXISTING SIGNS TO REMAIN UNLESS OTHERWISE NOTED ON THE PLANS.

NO.	DATE	REVISION	APPROVED

STATE OF TEXAS
GREGORIO GARCIA
101077
LICENSED
PROFESSIONAL ENGINEER

07/26/2023

©2023

Texas Department of Transportation

SANCHEZ-SALAZAR & ASSOCIATES, LLC
12770 Cimarron Path, Ste. 118
San Antonio, TX 78249
Phone: (210) 314-5458
TBPELS Registration No. 15685

SH 96 & FM 207
SIGNING AND PAVEMENT MARKING LAYOUT
STA 405+00 TO END PROJECT

DRAWN	FED.RD. DIV.NO.	FEDERAL AID PROJECT NO.		HIGHWAY NO.
CM	06			FM 270, ETC
DESIGNED CM	STATE	DIST.	COUNTY	SHEET NO.
CHECKED GG	TEXAS	HOUSTON	GALVESTON	315
APPROVED GG	CONT.	SECT.	JOB	
	0912	73	215	

PLOTDRIVER: cpypdf_ANSIB.pltcfg PENTABLE: LCBF.tbl
DATE: 7/26/2023 8:53:46 AM USER: Uvaldez
FILE: c:\bms\pwe101-01\uvaldo.valdez\dms22649\LCBF_PM16.dgn

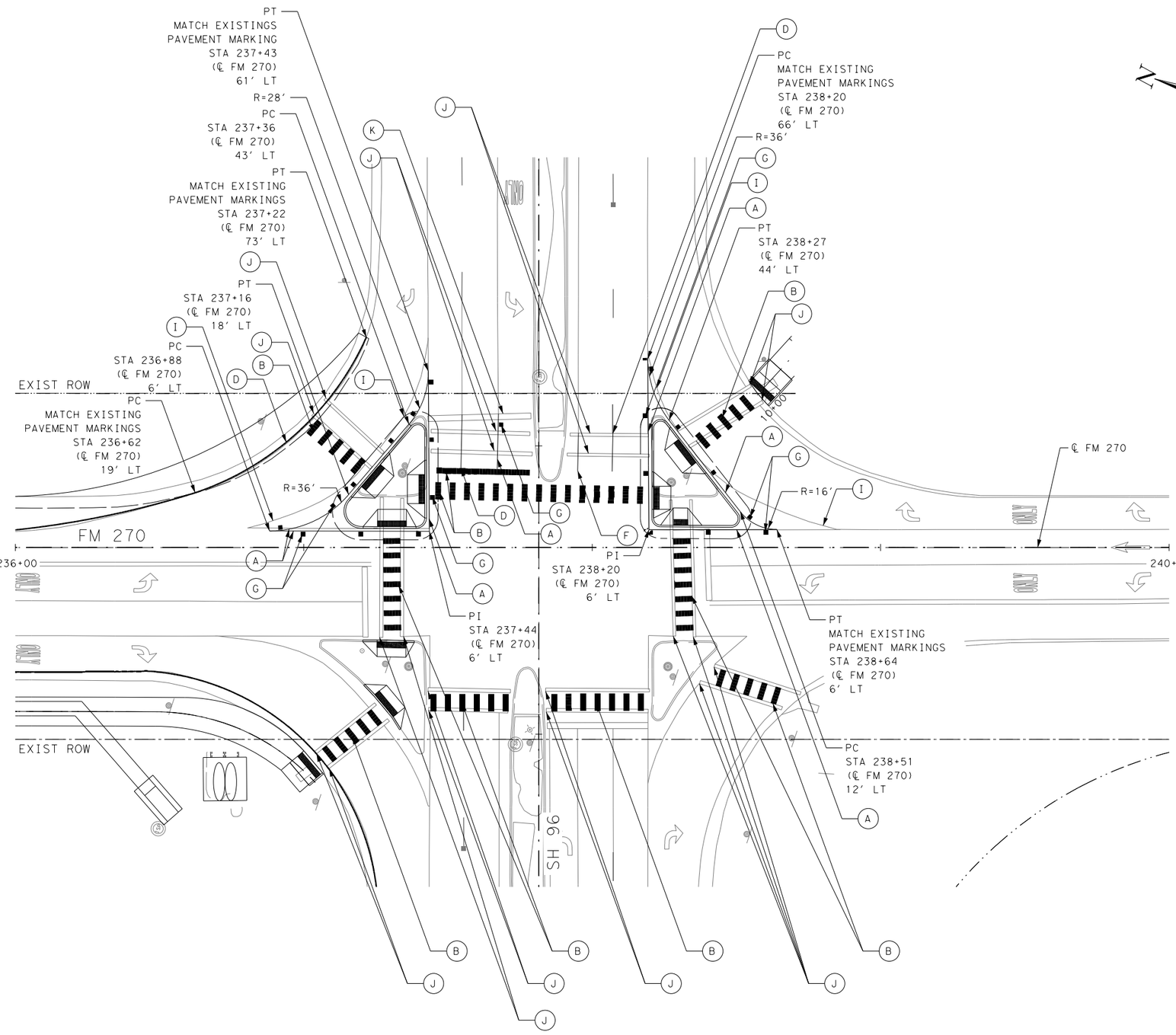

0′ 10′ 20′ 40′

LEGEND:

- (A) REFL PAV MRK TY I(W)8"(SLD)(100MIL)
- (B) REFL PAV MRK TY I(W)24"(SLD)(100MIL)
- (C) REFL PAV MRK TY I(W)(WORD)(100MIL)
- (D) RE PM W/RET REQ TY I(W)6"(SLD)(100MIL)
- (E) RE PM W/RET REQ TY I(Y)6"(BRK)(100MIL)
- (F) RE PM W/RET REQ TY I(Y)6"(SLD)(100MIL)
- (G) REFL PAV MRKR TY I-C
- (H) ELIM EXT PAVE MARK & MRKS (4")
- (I) ELIM EXT PAVE MARK & MRKS (8")
- (J) ELIM EXT PAVE MARK & MRKS (12")
- (K) ELIM EXT PAVE MARK & MRKS (24")
- (L) ELIM EXT PAVE MARK & MRKS (WORD)
- (M) PAV SURF PREP FOR MRK (6")
- DIRECTION OF TRAVEL (EXIST)
- PROPOSED SIGN
- EXISTING SIGN
- (#) PROPOSED SIGN
- (#) RELOCATE EXISTING SMALL SIGN
- (#) REMOVE SMALL SIGN

NOTE:
1. ALL EXISTING SIGNS TO REMAIN UNLESS OTHERWISE NOTED ON THE PLANS.

NO.	DATE	REVISION	APPROVED

STATE OF TEXAS
GREGORIO GARCIA
101077
LICENSED
PROFESSIONAL ENGINEER

07/26/2023

Texas Department of Transportation
©2023

SANCHEZ-SALAZAR & ASSOCIATES, LLC
12770 Cimarron Path, Ste. 118
San Antonio, TX 78249
Phone: (210) 314-5458
TBPELS Registration No. 15685

SH 96, FM 270
SIGNING AND PAVEMENT MARKING LAYOUT
INTERSECTION LAYOUT

SHEET 1 OF 1

DRAWN	FED.RD. DIV.NO.	FEDERAL AID PROJECT NO.		HIGHWAY NO.
CM	06			FM 270,ETC
DESIGNED	STATE	DIST.	COUNTY	SHEET NO.
CM	TEXAS	HOUSTON	GALVESTON	316
CHECKED	CONT.	SECT.	JOB	
GG	0912	73	215	
APPROVED				
GG				

PLOTDRIVER: cpypdf_ANSIB.pltcfg PENTABLE:LCBF.tbl
DATE:7/26/2023 8:53:51 AM USER:Uvaldez
FILE:c:\bms\pwe101-01\uvaldo.valdez\dms22649\LCBF_PM_INTERSECTION.dgn

DISCLAIMER:
The use of this standard is governed by the "Texas Engineering Practice Act". No warranty of any kind is made by TxDOT for any purpose whatsoever. TxDOT assumes no responsibility for the conversion of this standard to other formats or for incorrect results or damages resulting from its use.

DATE:
FILE:

REQUIREMENTS FOR INDEPENDENT MOUNTED ROUTE SIGNS

SHEETING REQUIREMENTS		
USAGE	COLOR	SIGN FACE MATERIAL
BACKGROUND	WHITE	TYPE A SHEETING
BACKGROUND	ALL OTHERS	TYPE B OR C SHEETING
LEGEND & BORDERS	WHITE	TYPE A SHEETING
LEGEND & BORDERS	BLACK	ACRYLIC NON-REFLECTIVE FILM
LEGEND & BORDERS	ALL OTHERS	TYPE B or C SHEETING

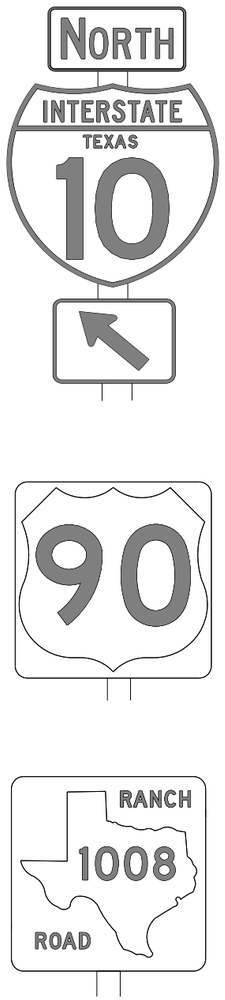

TYPICAL EXAMPLES

REQUIREMENTS FOR BLUE, BROWN & GREEN D AND I SERIES GUIDE SIGNS

SHEETING REQUIREMENTS		
USAGE	COLOR	SIGN FACE MATERIAL
BACKGROUND	ALL	TYPE B OR C SHEETING
LEGEND & BORDERS	WHITE	TYPE D SHEETING
LEGEND, SYMBOLS & BORDERS	ALL OTHERS	TYPE B OR C SHEETING

TYPICAL EXAMPLES

GENERAL NOTES

1. Signs to be furnished shall be as detailed elsewhere in the plans and/or as shown on sign tabulation sheet. Standard sign designs and arrow dimensions can be found in the "Standard Highway Sign Designs for Texas" (SHSD).

2. White legend shall use the Clearview Alphabet. The following Clearview fonts shall be used to replace the existing white Federal Highway Administration (FHWA) Standard Highway Alphabets, when not specified in the SHSD, or in the plans.

B	CV-1W
C	CV-2W
D	CV-3W
E	CV-4W
Emod	CV-5WR
F	CV-6W

3. Route sign legend (ie. IH, US, SH and FM shields) shall use the Federal Highway Administration (FHWA) Standard Highway Alphabets B, C, D, E, Emod or F).

4. Lateral spacing between letters and numerals shall conform with the SHSD, and any approved changes thereto. Lateral spacing of legend shall provide a balanced appearance when spacing is not shown.

5. Independent mounted route sign with white or colored legend and borders shall be applied by screening process with transparent color ink, transparent colored overlay film to white background sheeting or cut-out white sheeting to colored background sheeting, or combination thereof. White legend, symbols and borders on all other signs shall be cut-out white sheeting applied to colored background sheeting.

6. Information regarding borders and radii for signs is found in the "Standard Highway Sign Designs for Texas". Dimensions shown and described for borders and corner radii on parent sign are nominal. Borders may vary in width as much as 1/2 inch. Corner radii above 3 inches may vary in width as much as 1 inch. Borders and corner radii within a parent sign must be of matching widths. The sign area outside the corner radius should be trimmed or rounded.

7. Sign substrate shall be any material that meets the Departmental Material Specification requirements of DMS-7110 or approved alternative.

8. Mounting details of roadside signs are shown in the "SMD series" Standard Plan Sheets.

DEPARTMENTAL MATERIAL SPECIFICATIONS	
ALUMINUM SIGN BLANKS	DMS-7110
SIGN FACE MATERIALS	DMS-8300

ALUMINUM SIGN BLANKS THICKNESS	
Square Feet	Minimum Thickness
Less than 7.5	0.080
7.5 to 15	0.100
Greater than 15	0.125

The Standard Highway Sign Designs for Texas (SHSD) can be found at the following website.

http://www.txdot.gov/

Texas Department of Transportation

Traffic Operations Division Standard

TYPICAL SIGN REQUIREMENTS

TSR(3)-13

FILE: tsr3-13.dgn	DN: TxDOT	CK: TxDOT	DW: TxDOT	CK: TxDOT
©TxDOT October 2003	CONT	SECT	JOB	HIGHWAY
REVISIONS	0912	73	215	FM 270 ETC
12-03 7-13	DIST	COUNTY		SHEET NO.
9-08	HOU	GALVESTON		317

3

DISCLAIMER:
The use of this standard is governed by the "Texas Engineering Practice Act". No warranty of any kind is made by TxDOT for any purpose whatsoever. TxDOT assumes no responsibility for the conversion of this standard to other formats or for incorrect results or damages resulting from its use.

DATE:
FILE:

REQUIREMENTS FOR RED BACKGROUND REGULATORY SIGNS

(STOP, YIELD, DO NOT ENTER AND WRONG WAY SIGNS)

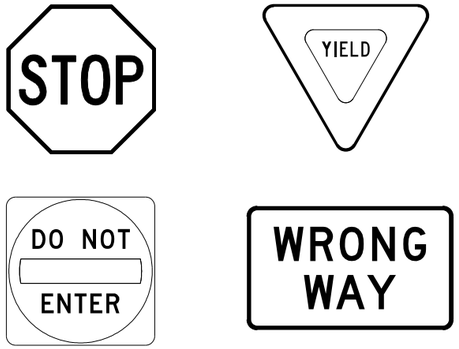

REQUIREMENTS FOR FOUR SPECIFIC SIGNS ONLY

SHEETING REQUIREMENTS		
USAGE	COLOR	SIGN FACE MATERIAL
BACKGROUND	RED	TYPE B OR C SHEETING
BACKGROUND	WHITE	TYPE B OR C SHEETING
LEGEND & BORDERS	WHITE	TYPE B OR C SHEETING
LEGEND	RED	TYPE B OR C SHEETING

REQUIREMENTS FOR WHITE BACKGROUND REGULATORY SIGNS

(EXCLUDING STOP, YIELD, DO NOT ENTER AND WRONG WAY SIGNS)

TYPICAL EXAMPLES

SHEETING REQUIREMENTS		
USAGE	COLOR	SIGN FACE MATERIAL
BACKGROUND	WHITE	TYPE A SHEETING
BACKGROUND	ALL OTHERS	TYPE B OR C SHEETING
LEGEND, BORDERS AND SYMBOLS	BLACK	ACRYLIC NON-REFLECTIVE FILM
LEGEND, BORDERS AND SYMBOLS	ALL OTHER	TYPE B OR C SHEETING

REQUIREMENTS FOR WARNING SIGNS

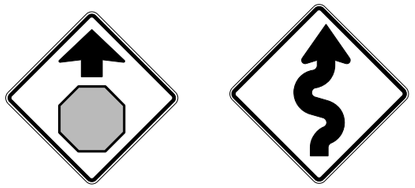

TYPICAL EXAMPLES

SHEETING REQUIREMENTS		
USAGE	COLOR	SIGN FACE MATERIAL
BACKGROUND	FLOURESCENT YELLOW	TYPE B_{FL} OR C_{FL} SHEETING
LEGEND & BORDERS	BLACK	ACRYLIC NON-REFLECTIVE FILM
LEGEND & SYMBOLS	ALL OTHER	TYPE B OR C SHEETING

REQUIREMENTS FOR SCHOOL SIGNS

TYPICAL EXAMPLES

SHEETING REQUIREMENTS		
USAGE	COLOR	SIGN FACE MATERIAL
BACKGROUND	WHITE	TYPE A SHEETING
BACKGROUND	FLOURESCENT YELLOW GREEN	TYPE B_{FL} OR C_{FL} SHEETING
LEGEND, BORDERS AND SYMBOLS	BLACK	ACRYLIC NON-REFLECTIVE FILM
SYMBOLS	RED	TYPE B OR C SHEETING

GENERAL NOTES

1. Signs to be furnished shall be as detailed elsewhere in the plans and/or as shown on sign tabulation sheet. Standard sign designs and arrow dimensions can be found in the "Standard Highway Sign Designs for Texas" (SHSD).
2. Sign legend shall use the Federal Highway Administration (FHWA) Standard Highway Alphabets (B, C, D, E, Emod or F).
3. Lateral spacing between letters and numerals shall conform with the SHSD, and any approved changes thereto. Lateral spacing of legend shall provide a balanced appearance when spacing is not shown.
4. Black legend and borders shall be applied by screening process or cut-out acrylic non-reflective black film to background sheeting, or combination thereof.
5. White legend and borders shall be applied by screening process with transparent colored ink, transparent colored overlay film to white background sheeting or cut-out white sheeting to colored background sheeting, or combination thereof.
6. Colored legend shall be applied by screening process with transparent colored ink, transparent colored overlay film or colored sheeting to background sheeting, or combination thereof.
7. Sign substrate shall be any material that meets the Departmental Material Specification requirements of DMS-7110 or approved alternative.
8. Mounting details for roadside mounted signs are shown in the "SMD series" Standard Plan Sheets.

ALUMINUM SIGN BLANKS THICKNESS	
Square Feet	Minimum Thickness
Less than 7.5	0.080
7.5 to 15	0.100
Greater than 15	0.125

DEPARTMENTAL MATERIAL SPECIFICATIONS	
ALUMINUM SIGN BLANKS	DMS-7110
SIGN FACE MATERIALS	DMS-8300

The Standard Highway Sign Designs for Texas (SHSD) can be found at the following website.

http://www.txdot.gov/

Texas Department of Transportation

Traffic Operations Division Standard

TYPICAL SIGN REQUIREMENTS

TSR(4)-13

FILE: tsr4-13.dgn	DN: TxDOT	CK: TxDOT	DW: TxDOT	CK: TxDOT
©TxDOT October 2003	CONT	SECT	JOB	HIGHWAY
REVISIONS	0912	73	215	FM 270 ETC
12-03 7-13 9-08	DIST	COUNTY		SHEET NO.
	HOU	GALVESTON		318

DISCLAIMER:
The use of this standard is governed by the "Texas Engineering Practice Act". No warranty of any kind is made by TxDOT for any purpose whatsoever. TxDOT assumes no responsibility for the conversion of this standard to other formats or for incorrect results or damages resulting from its use.

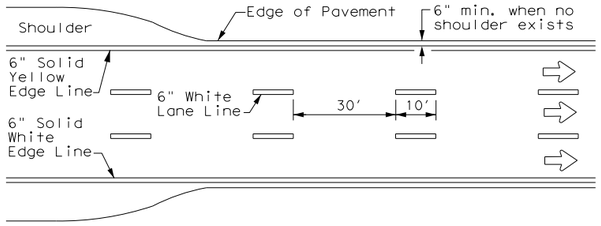

EDGE LINE AND LANE LINES
ONE-WAY ROADWAY
WITH OR WITHOUT SHOULDERS

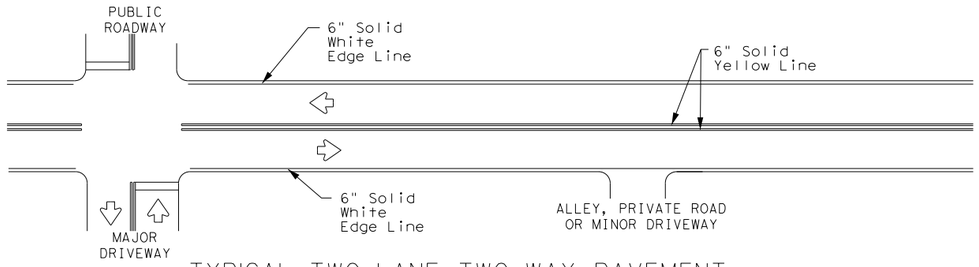

TYPICAL TWO-LANE, TWO-WAY PAVEMENT
MARKINGS THROUGH INTERSECTIONS

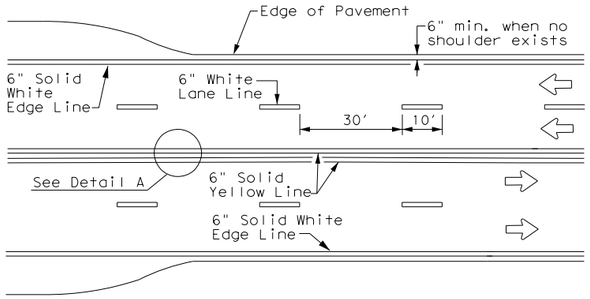

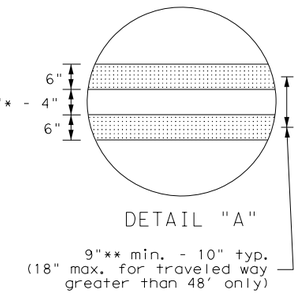

CENTERLINE AND LANE LINES
FOUR LANE TWO-WAY ROADWAY
WITH OR WITHOUT SHOULDERS

* 2" minimum for restripe projects when approved by the Engineer.

** 8" minimum for restripe projects when approved by the Engineer.

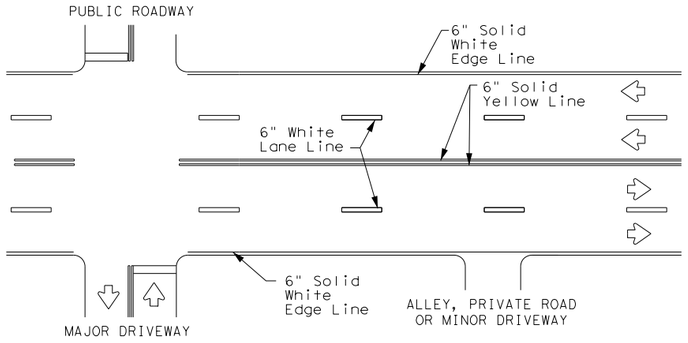

TYPICAL MULTI-LANE, TWO-WAY PAVEMENT
MARKINGS THROUGH INTERSECTIONS

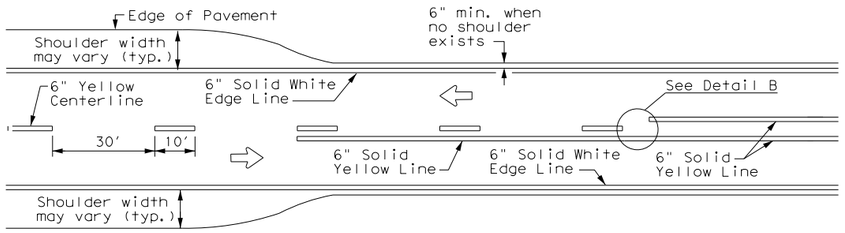

TWO LANE TWO-WAY ROADWAY
WITH OR WITHOUT SHOULDERS

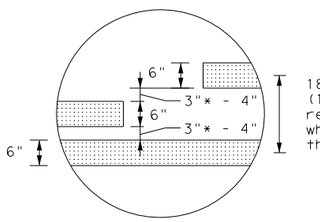

DETAIL "B"

* 2" minimum for restripe projects when approved by the Engineer.

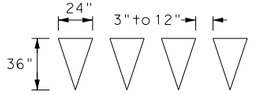

For posted speed on road being marked equal to or greater than 45 MPH.

YIELD LINES

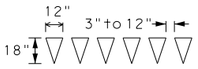

For posted speed on road being marked equal to or less than 40 MPH.

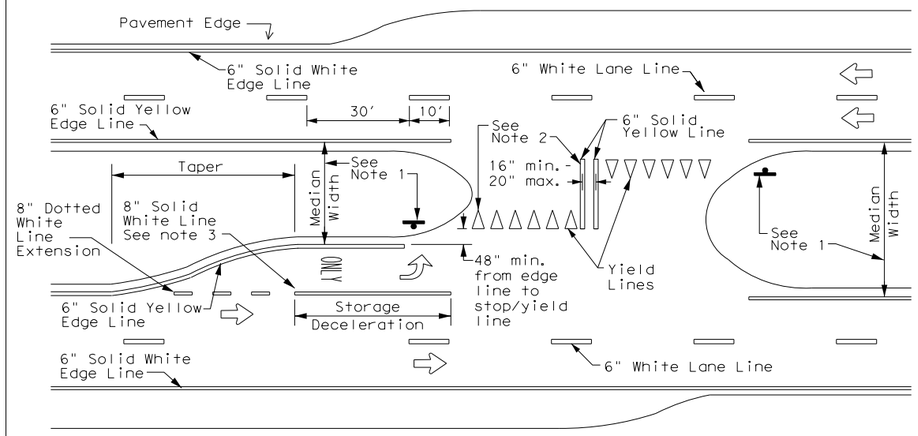

FOUR LANE DIVIDED ROADWAY CROSSOVERS

NOTES

1. Where divided highways are separated by median widths at the median opening itself of 30 feet or more, median openings shall be signed as two separate intersections.
   Each median opening has two width measurements, with one measurement for each approach. The narrow median width will be the controlling width to determine if signs are required. Yield signs are the typical intersection control. Stop signs and stop bars are optional as determined by the Engineer.
2. Install median striping (double yellow centerlines and stop lines/yield lines) when a 50' or greater median centerline can be placed. Stop lines shall only be used with stop signs. Yield lines shall only be used with yield signs.
3. Length of turn bays, including taper, deceleration, and storage lengths shall be as shown on the plans or as directed by the Engineer.

GENERAL NOTES

1. Edge line striping shall be as shown in the plans or as directed by the Engineer. The edge line should not be placed less than 6 inches from the edge of pavement. This distance may vary due to pavement raveling or other conditions. Edge lines are not required in curb and gutter sections of roadways.
2. The traveled way includes only that portion of the roadway used for vehicular travel. It does not include the parking lanes, sidewalks, berms and shoulders. The traveled ways shall be measured from the center of edge line to the center of edge line of a two lane roadway.

MATERIAL SPECIFICATIONS	
PAVEMENT MARKERS (REFLECTORIZED)	DMS-4200
EPOXY AND ADHESIVES	DMS-6100
BITUMINOUS ADHESIVE FOR PAVEMENT MARKERS	DMS-6130
TRAFFIC PAINT	DMS-8200
HOT APPLIED THERMOPLASTIC	DMS-8220
PERMANENT PREFABRICATED PAVEMENT MARKINGS	DMS-8240

All pavement marking materials shall meet the required Departmental Material Specifications as specified by the plans.

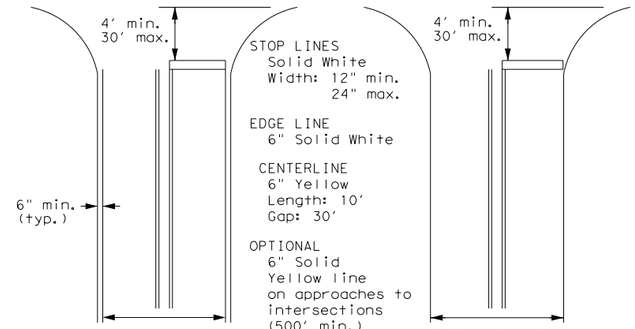

NOTE: Traveled way is exclusive of shoulder widths. Refer to General Note 2 for additional details.

GUIDE FOR PLACEMENT OF STOP LINES,
EDGE LINE & CENTERLINE
Based on Traveled Way and Pavement Widths
for Undivided Roadways

Texas Department of Transportation

Traffic Safety Division Standard

TYPICAL STANDARD PAVEMENT MARKINGS

PM(1)-22

FILE: pm1-22.dgn	DN:	CK:	DW:	CK:
© TxDOT December 2022	CONT	SECT	JOB	HIGHWAY
REVISIONS 11-78 8-00 6-20	0912	73	215	FM 270 ETC
8-95 3-03 12-22	DIST	COUNTY		SHEET NO.
5-00 2-12	HOU	GALVESTON		319

22A

DATE:
FILE:

REFLECTIVE RAISED PAVEMENT MARKERS FOR VEHICLE POSITIONING GUIDANCE

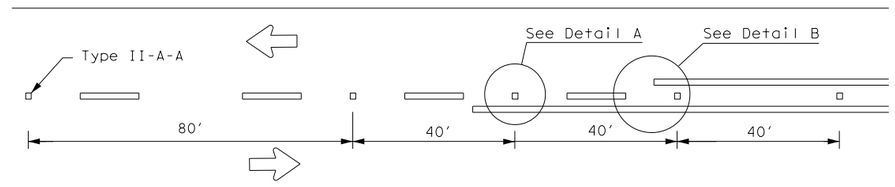

CENTERLINE FOR ALL TWO LANE TWO-WAY ROADWAYS

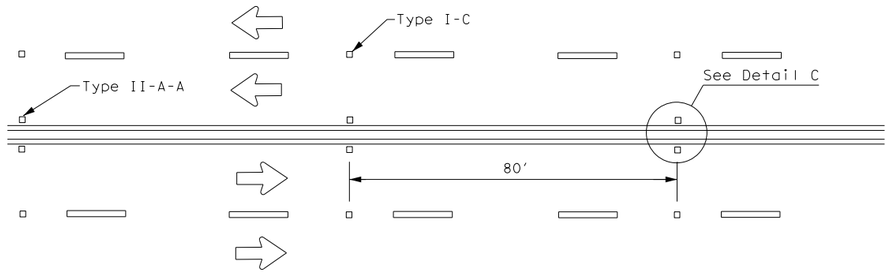

CENTERLINE & LANE LINES
FOR FOUR LANE TWO-WAY ROADWAYS

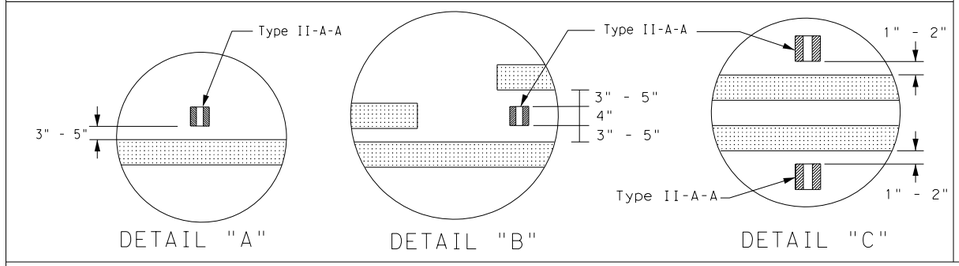

DETAIL "A" DETAIL "B" DETAIL "C"

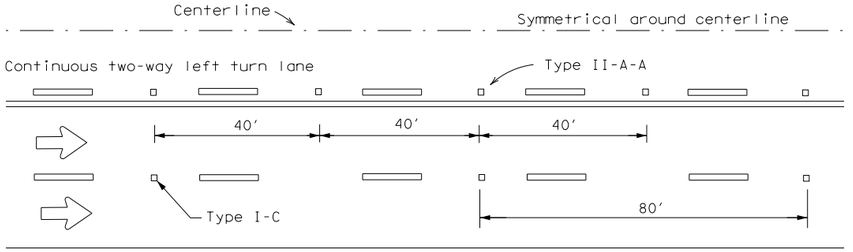

CENTERLINE AND LANE LINES FOR TWO-WAY LEFT TURN LANE

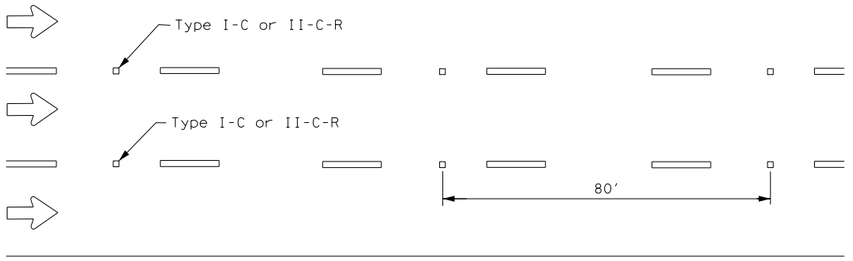

LANE LINES FOR ONE-WAY ROADWAY (NON-FREEWAY FACILITIES)

Raised pavement markers Type II-C-R shall have clear face toward normal traffic and red face toward wrong-way traffic.

See Note 3.

MATERIAL SPECIFICATIONS	
PAVEMENT MARKERS (REFLECTORIZED)	DMS-4200
EPOXY AND ADHESIVES	DMS-6100
BITUMINOUS ADHESIVE FOR PAVEMENT MARKERS	DMS-6130
TRAFFIC PAINT	DMS-8200
HOT APPLIED THERMOPLASTIC	DMS-8220
PERMANENT PREFABRICATED PAVEMENT MARKINGS	DMS-8240

All pavement marking materials shall meet the required Departmental Material Specifications as specified by the plans.

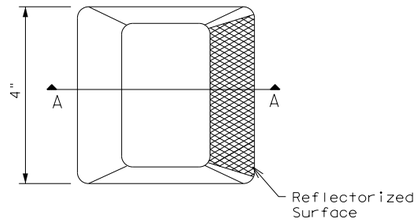

Type I (Top View)

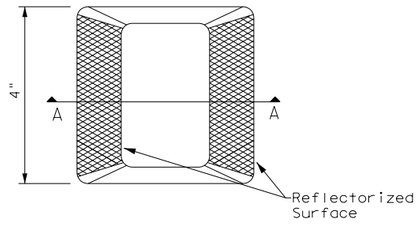

Type II (Top View)

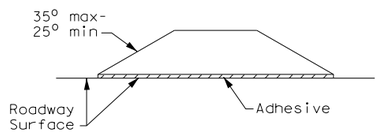

SECTION A

RAISED PAVEMENT MARKERS

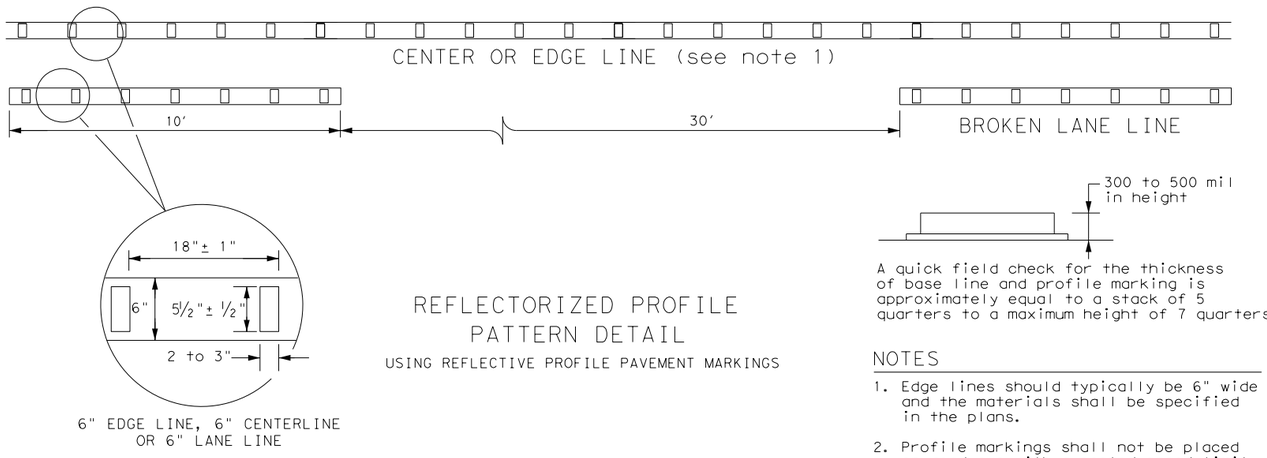

6" EDGE LINE, 6" CENTERLINE
OR 6" LANE LINE

REFLECTORIZED PROFILE
PATTERN DETAIL

USING REFLECTIVE PROFILE PAVEMENT MARKINGS

A quick field check for the thickness of base line and profile marking is approximately equal to a stack of 5 quarters to a maximum height of 7 quarters.

NOTES

1. Edge lines should typically be 6" wide and the materials shall be specified in the plans.
2. Profile markings shall not be placed on roadways with a posted speed limit of 45 MPH or less.

GENERAL NOTES

1. All raised pavement markers placed along broken lines shall be placed in line with and midway between the stripes.
2. On concrete pavements the raised pavement markers should be placed to one side of the longitudinal joints.
3. Use raised pavement marker Type I-C with undivided roadways, flush medians and two way left turn lanes. Use raised pavement marker Type II-C-R with divided highways and raised medians.

Texas Department of Transportation

Traffic Safety Division Standard

POSITION GUIDANCE USING RAISED MARKERS RELECTORIZED PROFILE MARKINGS PM(2)-22

FILE: pm2-22.dgn	DN:	CK:	DW:	CK:
©TxDOT December 2022	CONT	SECT	JOB	HIGHWAY
REVISIONS 4-77 8-00 6-20 4-92 2-10 12-22 5-00 2-12	0912	73	215	FM 270 ETC
	DIST	COUNTY		SHEET NO.
	HOU	GALVESTON		320

22B

DISCLAIMER:
The use of this standard is governed by the "Texas Engineering Practice Act". No warranty of any kind is made by TxDOT for any purpose whatsoever. TxDOT assumes no responsibility for the conversion of this standard to other formats or for incorrect results or damages resulting from its use.

DATE:
FILE:

DISCLAIMER:
The use of this standard is governed by the "Texas Engineering Practice Act". No warranty of any kind is made by TxDOT for any purpose whatsoever. TxDOT assumes no responsibility for the conversion of this standard to other formats or for incorrect results or damages resulting from its use.

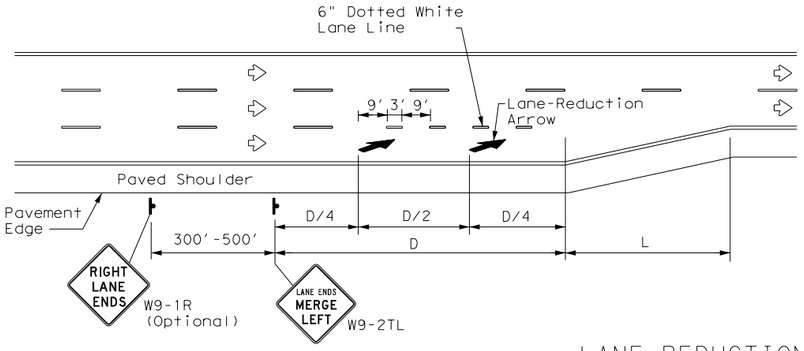

LANE REDUCTION

NOTES

1. Lane reduction pavement markings are used where the number of through lanes is reduced because of narrowing of the roadway or because of a section of on-street parking in what would otherwise be a through lane. For Texas Super 2 Passing Lanes, see TS2(PL) standard sheets.
2. On divided highways, an additional RIGHT LANE ENDS (W9-1R) sign may be installed in the median aligned with the W9-1R sign on the right side of the highway.
3. Lane reduction arrows are required for speeds of 45 mph or greater. An optional third lane reduction arrow may be added based on engineering judgement. If used, the optional third lane reduction arrow should be centered between the first and last lane reduction arrows.
4. For lane reductions on Freeways and Expressways, signing shall conform to the TxDOT Freeway Signing Handbook.

ADVANCED WARNING SIGN DISTANCE (D)		
Posted Speed	D (ft)	L (ft)
30 MPH	460	$L=\frac{WS^2}{60}$
35 MPH	565	
40 MPH	670	
45 MPH	775	L=WS
50 MPH	885	
55 MPH	990	
60 MPH	1,100	
65 MPH	1,200	
70 MPH	1,250	
75 MPH	1,350	

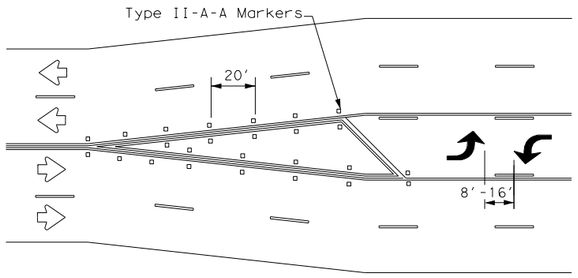

A two-way left-turn (TWLT) lane-use arrow pavement marking should be used at or just downstream from the beginning of a two-way left-turn lane within a corridor. Repeating the marking after each intersection or dedicated turn bay is not required unless stated elsewhere in the plans.

TYPICAL TRANSITION FOR TWLTL AND DIVIDED HIGHWAY

GENERAL NOTES

1. Lane use word and arrow markings shall be used where through lanes approaching an intersection become mandatory turn lanes. Lane use word and arrow markings should be used in auxiliary lanes of substantial length. Lane use arrow markings or word and arrow markings may be used in other lanes and turn bays for emphasis. Details for words and arrows are as shown in the Standard Highway Sign Designs for Texas.
2. When lane-use words and arrow markings are used, two sets of arrows should be used if the length of the bay is greater than 180 feet. When a single lane use arrow or word and arrow marking is used for a short turn lane, it should be located at or near the upstream end of the full-width turn lane.
3. Use raised pavement marker Type I-C with undivided highways, flush medians and two way left turn lanes. Use raised pavement marker Type II-C-R with divided highways and raised medians.
4. Length of turn bays, including taper, deceleration, and storage lengths shall be as shown on the plans or as directed by the Engineer. See Chapter 3 of the Roadway Design Manual for additional information on turning lanes or storage lengths.

MATERIAL SPECIFICATIONS	
PAVEMENT MARKERS (REFLECTORIZED)	DMS-4200
EPOXY AND ADHESIVES	DMS-6100
BITUMINOUS ADHESIVE FOR PAVEMENT MARKERS	DMS-6130
TRAFFIC PAINT	DMS-8200
HOT APPLIED THERMOPLASTIC	DMS-8220
PERMANENT PREFABRICATED PAVEMENT MARKINGS	DMS-8240

All pavement marking materials shall meet the required Departmental Material Specifications as specified by the plans.

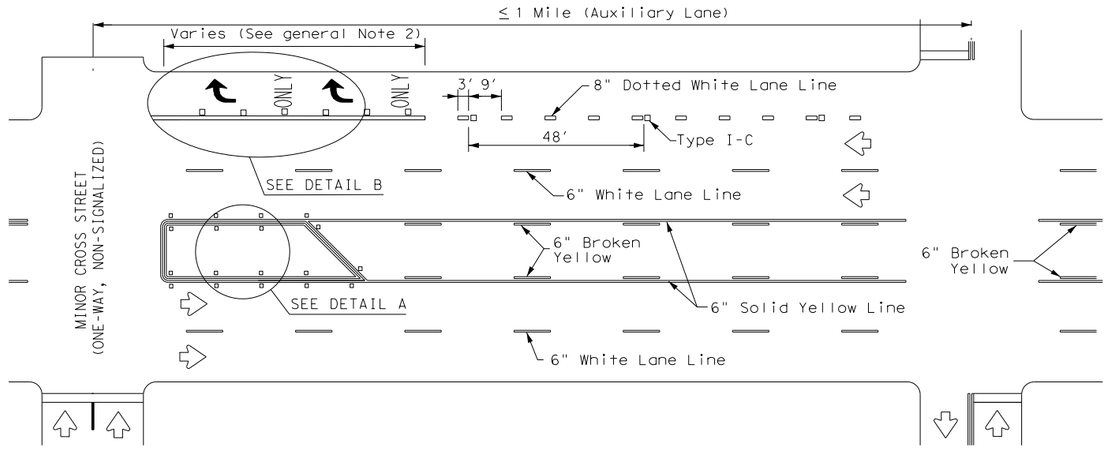

TYPICAL TWLTL AT ONE-WAY STREET AND RIGHT TURN AUXILIARY LANE

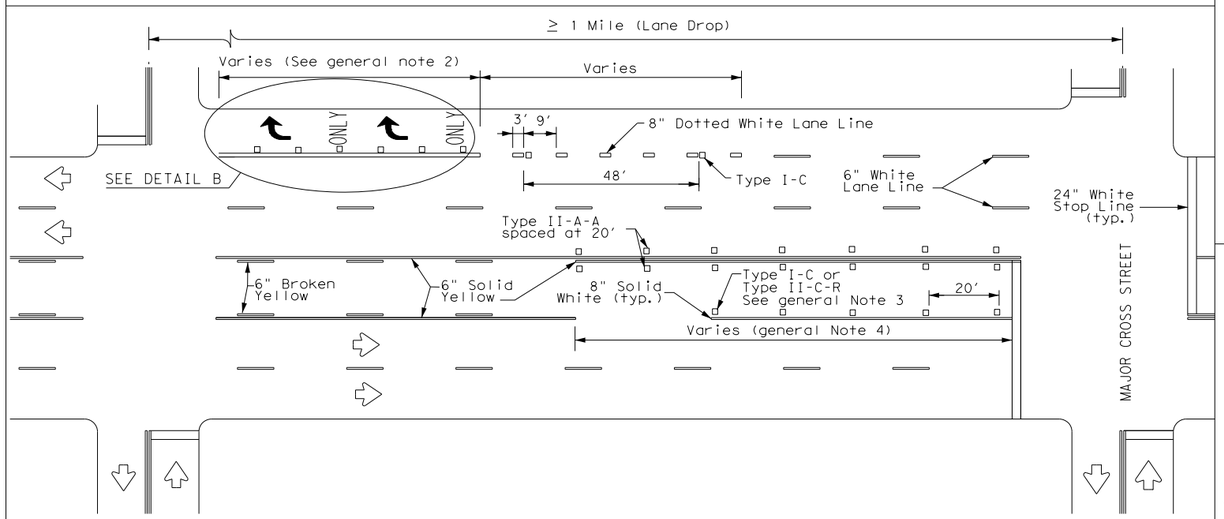

TYPICAL TWLTL AT TWO-WAY CROSS STREET AND RIGHT TURN LANE DROP

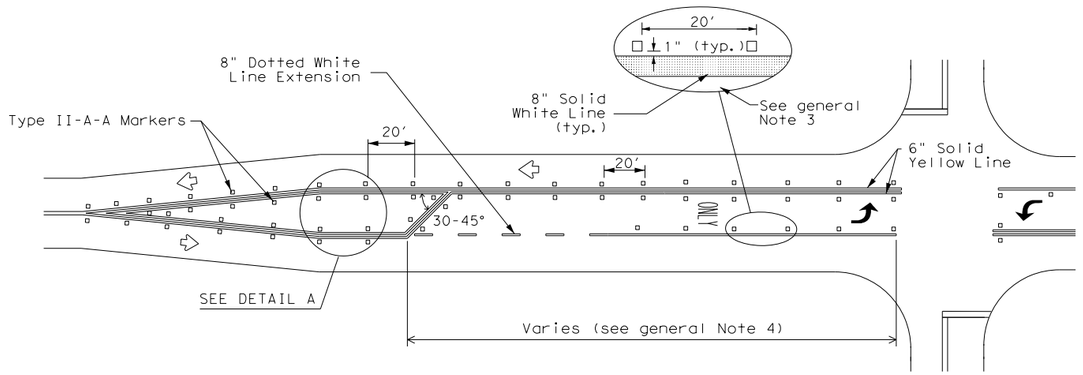

TYPICAL TWO-LANE ROADWAY INTERSECTION WITH LEFT TURN BAYS

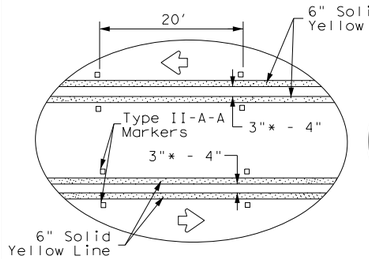

DETAIL A

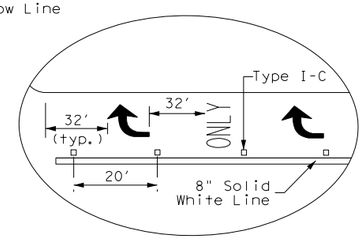

DETAIL B

* 2" minimum allowed for restripe projects when approved by the Engineer.

Texas Department of Transportation

Traffic Safety Division Standard

TWO-WAY LEFT TURN LANES, RURAL LEFT TURN BAYS, AND LANE REDUCTION PAVEMENT MARKINGS

PM(3)-22

FILE: pm3-22.dgn	DN:	CK:	DW:	CK:
© TxDOT December 2022	CONT	SECT	JOB	HIGHWAY
REVISIONS 4-98 3-03 6-20 5-00 2-10 12-22 8-00 2-12	0912	73	215	FM 270 ETC
	DIST	COUNTY		SHEET NO.
	HOU	GALVESTON		321

22C

DATE:
FILE:

DISCLAIMER:
The use of this standard is governed by the "Texas Engineering Practice Act". No warranty of any kind is made by TxDOT for any purpose whatsoever. TxDOT assumes no responsibility for the conversion of this standard to other formats or for incorrect results or damages resulting from its use.

DATE:
FILE:

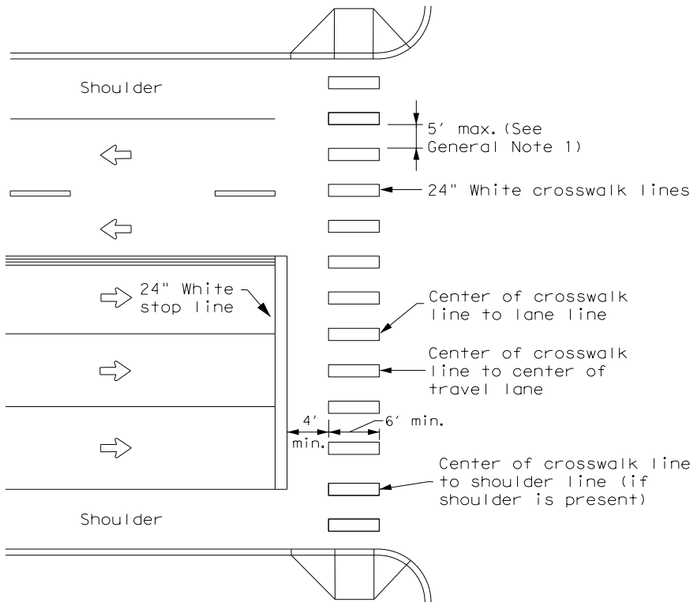

HIGH-VISIBILITY LONGITUDINAL CROSSWALK
AT CONTROLLED APPROACH

GENERAL NOTES

1. Longitudinal crosswalk lines should not be placed in the wheel path of vehicles. Center the crosswalk lines on travel lanes, lane lines, and shoulder lines (if present).
2. A minimum 6" clear distance shall be provided to the curb face. If the last crosswalk line falls into this distance it must be omitted.
3. For divided roadways, adjustments in spacing of the crosswalk lines should be made in the median so that the crosswalk lines are maintained in their proper location across the travel portion of the roadway.
4. At skewed crosswalks, the crosswalk lines are to remain parallel to the lane lines.
5. Each crosswalk shall be a minimum of 6' wide.
6. The High-Visibility Longitudinal Crosswalk is the preferred crosswalk pattern on State Highways. Other crosswalk patterns as shown in the "Texas Manual on Uniform Traffic Control Devices" may be used. All crosswalk designs and dimension shall comply with the "Texas Manual on Uniform Traffic Control Devices."
7. Final placement of Stop Bar and Crosswalk shall be approved by the Engineer in the field.

MATERIAL SPECIFICATIONS	
PAVEMENT MARKERS (REFLECTORIZED)	DMS-4200
EPOXY AND ADHESIVES	DMS-6100
BITUMINOUS ADHESIVE FOR PAVEMENT MARKERS	DMS-6130
TRAFFIC PAINT	DMS-8200
HOT APPLIED THERMOPLASTIC	DMS-8220
PERMANENT PREFABRICATED PAVEMENT MARKINGS	DMS-8240

All pavement marking materials shall meet the required Departmental Material Specifications as specified by the plans.

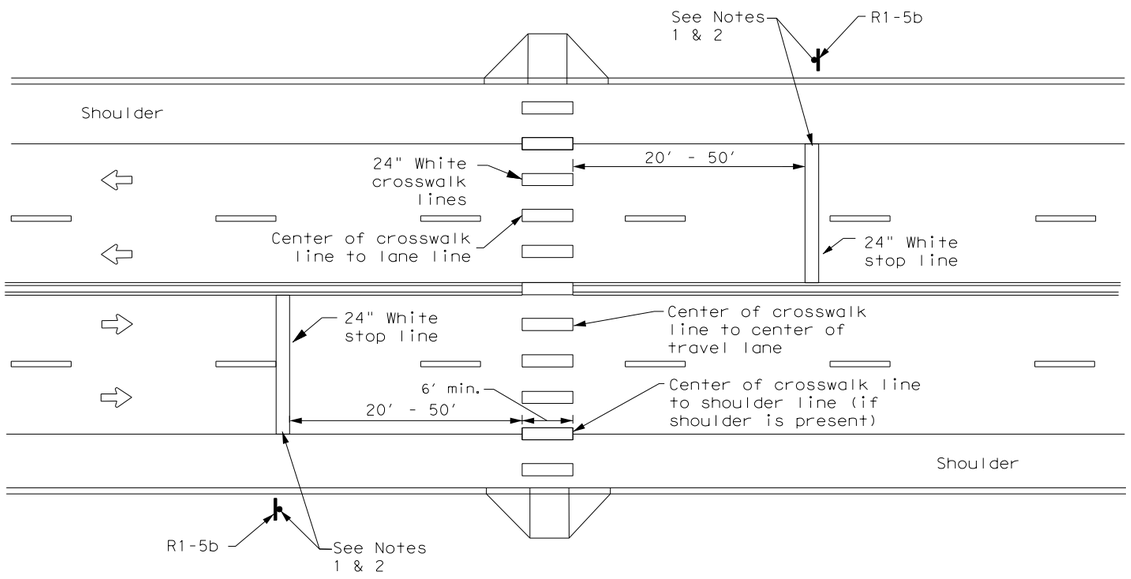

UNSIGNALIZED MIDBLOCK HIGH-VISIBILITY
LONGITUDINAL CROSSWALK

NOTES:

1. Use stop bars with Stop Here For Pedestrians (R1-5b) signs at unsignalized midblock cross walks.
2. Use stop bars with STOP HERE ON RED (R10-6 or R10-6a) signs at mid block crosswalks controlled by traffic signals or pedestrian hybrid beacons.

Texas Department of Transportation

Traffic Safety Division Standard

CROSSWALK PAVEMENT MARKINGS

PM(4)-22A

FILE: pm4-22a.dgn	DN:	CK:	DW:	CK:
© TxDOT December 2022	CONT	SECT	JOB	HIGHWAY
REVISIONS	0912	73	215	FM 270 ETC
6-20	DIST	COUNTY		SHEET NO.
6-22	HOU	GALVESTON		322
12-22				
22D				

DISCLAIMER: The use of this standard is governed by the "Texas Engineering Practice Act". No warranty of any kind is made by TxDOT for any purpose whatsoever. TxDOT assumes no responsibility for the conversion of this standard to other formats or for incorrect results or damages resulting from its use.

SIGN SUPPORT DESCRIPTIVE CODES

(Descriptive Codes correspond to project estimate and quantities sheets)

SM RD SGN ASSM TY XXXXX(X)XX(X-XXXX)

Post Type

FRP = Fiberglass Reinforced Plastic Pipe (see SMD(FRP))
TWT = Thin-Walled Tubing (see SMD(TWT))
10BWG = 10 BWG Tubing (see SMD(SLIP-1) to (SLIP-3))
S80 = Schedule 80 Pipe (see SMD(SLIP-1) to (SLIP-3))

Number of Posts (1 or 2)

Anchor Type

UA = Universal Anchor - Concreted (see SMD(FRP) and (TWT))
UB = Universal Anchor - Bolted down (see SMD(FRP) and (TWT))
WS = Wedge Anchor Steel - (see SMD(TWT))
WP = Wedge Anchor Plastic (see SMD(TWT))
SA = Slipbase - Concreted (see SMD(SLIP-1) to (SLIP-3))
SB = Slipbase - Bolted Down (see SMD(SLIP-1) to (SLIP-3))

Sign Mounting Designation

P = Prefab. "Plain" (see SMD(SLIP-1) to (SLIP-3), (TWT), (FRP))
T = Prefab. "T" (see SMD(SLIP-1) to (SLIP-3), (TWT))
U = Prefab. "U" (see SMD(SLIP-1) to (SLIP-3))
IF REQUIRED
1EXT or 2EXT = Number of Extensions (see SMD(SLIP-1) to (SLIP-3), (TWT))
BM = Extruded Wind Beam (see SMD(SLIP-1) to (SLIP-3))
WC = 1.12 #/ft Wing Channel (see SMD(SLIP-1) to (SLIP-3))
EXAL = Extruded Aluminum Sign Panels (see SMD(SLIP-1))

REQUIRED CLEARANCE FOR BREAKAWAY SUPPORT

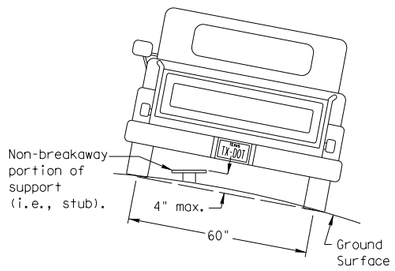

To avoid vehicle undercarriage snagging, any substantial remains of a breakaway support, when it is broken away, should not project more than 4 inches above a 60-inch chord (i.e., typical space between wheel paths).

No more than 2 sign posts should be located within a 7 ft. circle.

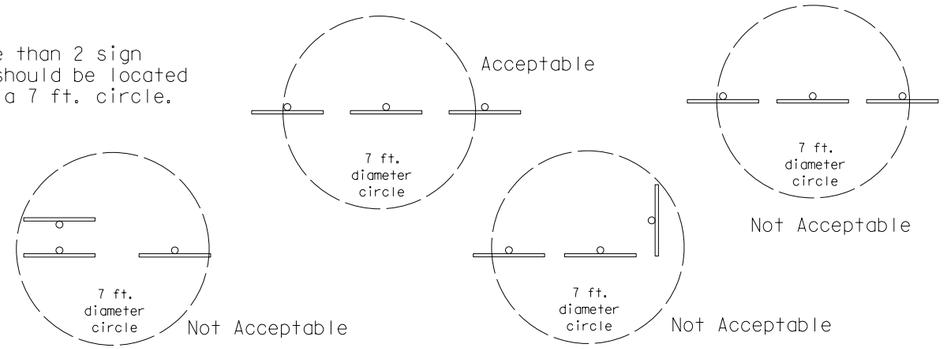

SIGN LOCATION

PAVED SHOULDERS

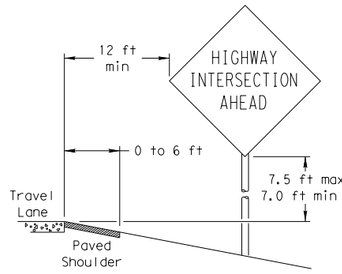

LESS THAN 6 FT. WIDE

When the shoulder is 6 ft. or less in width, the sign must be placed at least 12 ft. from the edge of the travel lane.

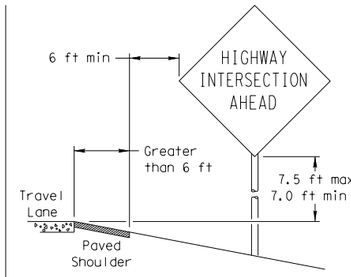

GREATER THAN 6 FT. WIDE

When the shoulder is greater than 6 ft in width, the sign must be placed at least 6 ft. from the edge of the shoulder.

BEHIND BARRIER

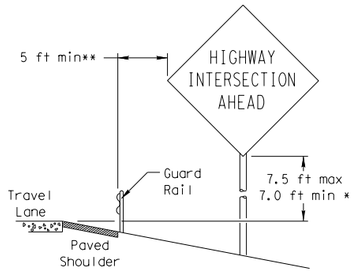

BEHIND GUARDRAIL

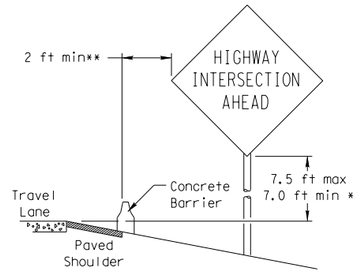

BEHIND CONCRETE BARRIER

**Sign clearance based on distance required for proper guard rail or concrete barrier performance.

T-INTERSECTION

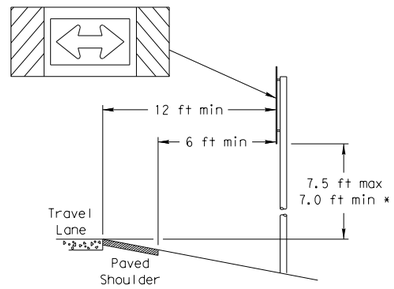

When this sign is needed at the end of a two-lane, two way roadway, the right edge of the sign should be in line with the centerline of the roadway. Place as close to ROW as practical.

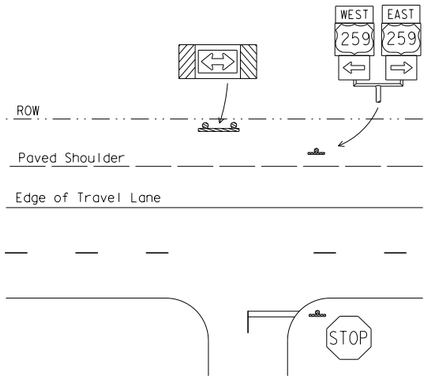

* Signs shall be mounted using the following condition that results in the greatest sign elevation:

(1) a minimum of 7 to a maximum of 7.5 feet above the edge of the travel lane or

(2) a minimum of 7 to a maximum of 7.5 feet above the grade at the base of the support when sign is installed on the backslope.

The maximum values may be increased when directed by the Engineer.

See the Traffic Operations Division website for detailed drawings of sign clamps, Triangular Slipbase System components and Wedge Anchor System components.

The website address is:
http://www.txdot.gov/publications/traffic.htm

TYPICAL SIGN ATTACHMENT DETAIL

Single Signs

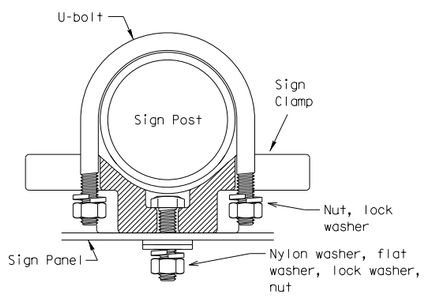

Back-to-Back Signs

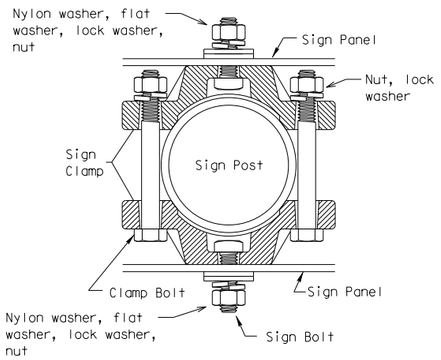

Bolts used to mount sign panels to the clamp are 5/16-18 UNC galvanized square head with nut, nylon washer, flat washer and lock washer. The bolt length is 1 inch for aluminum.

When two sign clamps are used to mount signs back-to-back, use a 5/16-18 UNC galvanized hex head per ASTM A307 with nut and helical-spring lock washer. The approximate bolt lengths for various post sizes and sign clamp types are given in the table at right. The bolt length may need to be adjusted depending upon field conditions.

Sign clamps may be either the specific size clamp or the universal clamp.

Pipe Diameter	Approximate Bolt Length	
	Specific Clamp	Universal Clamp
2" nominal	3"	3 or 3 1/2"
2 1/2" nominal	3 or 3 1/2"	3 1/2 or 4"
3" nominal	3 1/2 or 4"	4 1/2"

SIGNS WITH PLAQUES

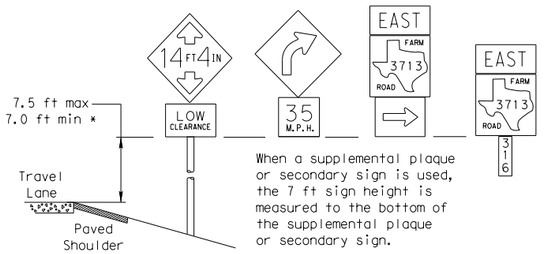

When a supplemental plaque or secondary sign is used, the 7 ft sign height is measured to the bottom of the supplemental plaque or secondary sign.

CURB & GUTTER OR RAISED ISLAND

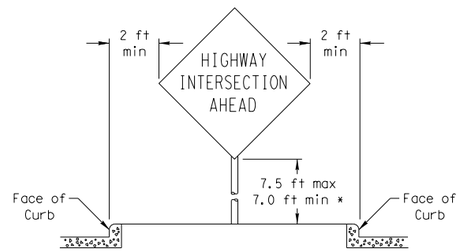

RESTRICTED RIGHT-OF-WAY

(When 6 ft min. is not possible.)

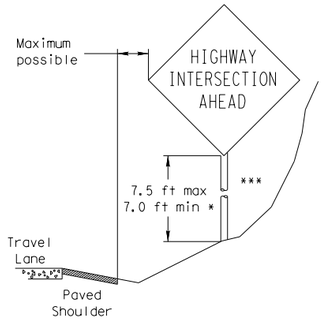

Right-of-way restrictions may be created by rocks, water, vegetation, forest, buildings, a narrow island, or other factors.

In situations where a lateral restriction prevents the minimum horizontal clearance from the edge of the travel lane, signs should be placed as far from the travel lane as practical.

*** Post may be shorter if protected by guardrail or if Engineer determines the post could not be hit due to extreme slope.

Texas Department of Transportation
Traffic Operations Division

SIGN MOUNTING DETAILS SMALL ROADSIDE SIGNS GENERAL NOTES & DETAILS

SMD(GEN)-08

© TxDOT July 2002	DN: TXDOT	CK: TXDOT	DW: TXDOT	CK: TXDOT
REVISIONS	CONT	SECT	JOB	HIGHWAY
9-08	0912	73	215	FM 270 ETC
	DIST	COUNTY		SHEET NO.
	HOU	GALVESTON		323

26A

DATE:
FILE:

DISCLAIMER: The use of this standard is governed by the "Texas Engineering Practice Act". No warranty of any kind is made by TxDOT for any purpose whatsoever. TxDOT assumes no responsibility for the conversion of this standard to other formats or for incorrect results or damages resulting from its use.

TRIANGULAR SLIPBASE INSTALLATION GENERAL REQUIREMENTS

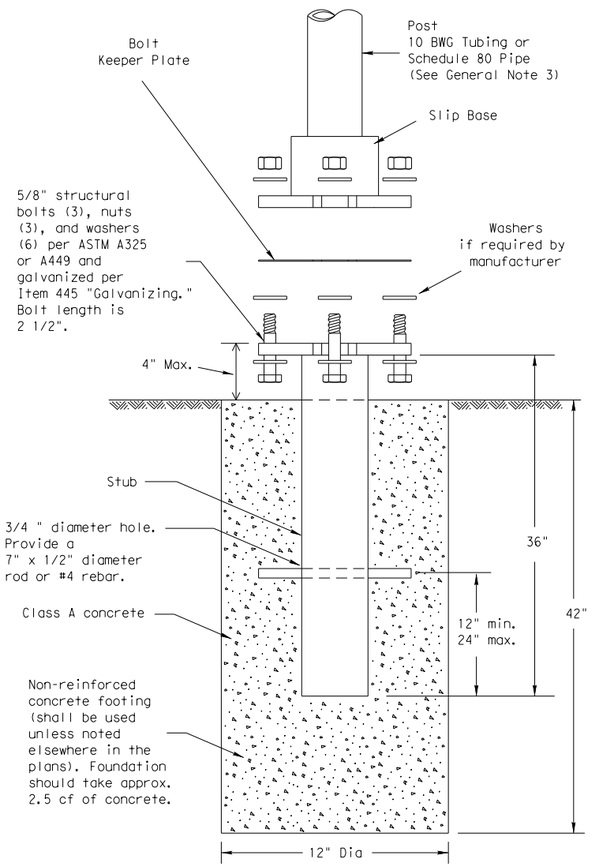

SM RD SGN ASSM TY XXXXX(X)SA(X-XXXX)

NOTE

There are various devices approved for the Triangular Slipbase System. Please reference the Material Producer List for approved slip base systems. http://www.txdot.gov/business/producer_list.htm The devices shall be installed per manufacturers' recommendations. Installation procedures shall be provided to the Engineer by Contractor.

GENERAL NOTES:

1. Slip base shall be permanently marked to indicate manufacturer. Method, design, and location of marking are subject to approval of the TxDOT Traffic Standards Engineer.
2. Material used as post with this system shall conform to the following specifications:
   10 BWG Tubing (2.875" outside diameter)
   - 0.134" nominal wall thickness
   - Seamless or electric-resistance welded steel tubing or pipe
   - Steel shall be HSLAS Gr 55 per ASTM A1011 or ASTM A1008
   - Other steels may be used if they meet the following:
     - 55,000 PSI minimum yield strength
     - 70,000 PSI minimum tensile strength
     - 20% minimum elongation in 2"
   - Wall thickness (uncoated) shall be within the range of 0.122" to 0.138"
   - Outside diameter (uncoated) shall be within the range of 2.867" to 2.883"
   - Galvanization per ASTM A123 or ASTM A653 G210. For precoated steel tubing (ASTM A653), recoat tube outside diameter weld seam by metallizing with zinc wire per ASTM B833.

   Schedule 80 Pipe (2.875" outside diameter)
   - 0.276" nominal wall thickness
   - Steel tubing per ASTM A500 Gr C
   - Other seamless or electric-resistance welded steel tubing or pipe with equivalent outside diameter and wall thickness may be used if they meet the following:
     - 46,000 PSI minimum yield strength
     - 62,000 PSI minimum tensile strength
     - 21% minimum elongation in 2"
   - Wall thickness (uncoated) shall be within the range of 0.248" to 0.304"
   - Outside diameter (uncoated) shall be within the range of 2.855" to 2.895"
   - Galvanization per ASTM A123
3. See the Traffic Operations Division website for detailed drawings of sign clamps and Texas Universal Triangular Slipbase System components. The website address is: http://www.txdot.gov/publications/traffic.htm
4. Sign supports shall not be spliced except where shown. Sign support posts shall not be spliced.

ASSEMBLY PROCEDURE

Foundation
1. Prepare 12-inch diameter by 42-inch deep hole. If solid rock is encountered, the depth of the foundation may be reduced such that it is embedded a minimum of 18 inches into the solid rock.
2. The Engineer may permit batches of concrete less than 2 cubic yards to be mixed with a portable, motor-driven concrete mixer. For small placements less than 0.5 cubic yards, hand mixing in a suitable container may be allowed by Engineer. Concrete shall be Class A.
3. Push the pipe end of the slip base stub into the center of the concrete. Rotate the stub back and forth while pushing it down into the concrete to assure good contact between the concrete and stub. Continue to work the stub into the concrete until it is between 2 to 4 inches above the ground.
4. Plumb the stub. Allow a minimum of 4 days to set, unless otherwise directed by the Engineer.
5. The triangular slipbase system is multidirectional and is designed to release when struck from any direction.

Support
1. Cut support so that the bottom of the sign will be 7 to 7.5 feet above the edge of the travelway (i.e., edge of the closest lane) when slip plate is below the edge of pavement or 7 to 7.5 feet above slip plate when the slip plate is above the edge of the travelway. The cut shall be plumb and straight.
2. Attach sign to support using connections shown. When multiple signs are installed on the same support, ensure the minimum clearance between each sign is maintained. See SMD(SLIP-2) for clearances based on sign types.

CONCRETE ANCHOR

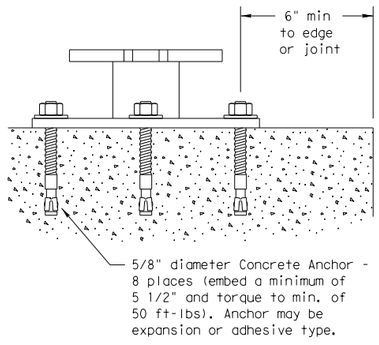

SM RD SGN ASSM TY XXXXX(X)SB(X-XXXX)

Concrete anchor consists of 5/8" diameter stud bolt with UNC series bolt threads on the upper end. Heavy hex nut per ASTM A563, and hardened washer per ASTM F436. The stud bolt shall have a minimum yield and ultimate tensile strength of 50 and 75 KSI, respectively. Nuts, bolts and washers shall be galvanized per Item 445, "Galvanizing." Adhesive type anchors shall have stud bolts installed with Type III epoxy per DMS-6100, "Epoxies and Adhesives." Adhesive anchors may be loaded after adequate epoxy cure time per the manufacturer's recommendations. Top of bolt shall extend at least flush with top of the nut when installed. The anchor, when installed in 4000 psi normal-weight concrete with a 5 1/2" minimum embedment, shall have a minimum allowable tension and shear of 3900 and 3100 psi, respectively.

Texas Department of Transportation
Traffic Operations Division

SIGN MOUNTING DETAILS
SMALL ROADSIDE SIGNS
TRIANGULAR SLIPBASE SYSTEM

SMD(SLIP-1)-08

©TxDOT July 2002

DN: TXDOT	CK: TXDOT	DW: TXDOT	CK: TXDOT

REVISIONS
9-08

CONT	SECT	JOB	HIGHWAY
0912	73	215	FM 270 ETC

DIST	COUNTY	SHEET NO.
HOU	GALVESTON	324

DATE:
FILE:

DISCLAIMER: The use of this standard is governed by the "Texas Engineering Practice Act". No warranty of any kind is made by TxDOT for any purpose whatsoever. TxDOT assumes no responsibility for the conversion of this standard to other formats or for incorrect results or damages resulting from its use.

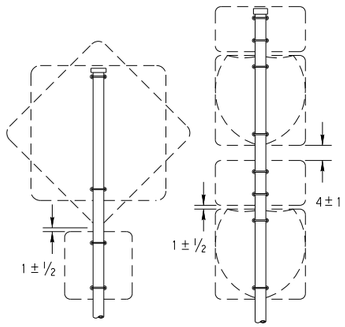

SM RD SGN ASSM TY XXXXX(1)XX(P)

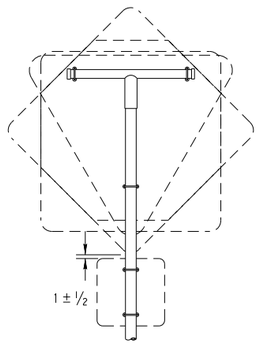

SM RD SGN ASSM TY XXXXX(1)XX(T)

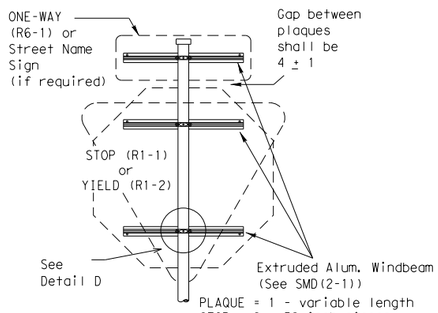

SM RD SGN ASSM TY XXXXX(1)XX(P-BM)

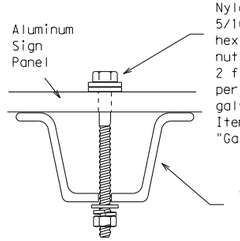

Top View

Detail A

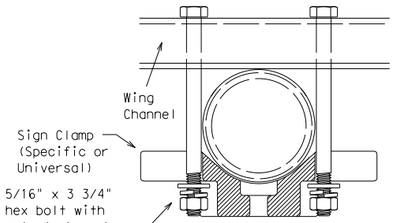

Top View

Detail B

GENERAL NOTES:

1.

SIGN SUPPORT	# OF POSTS	MAX. SIGN AREA
10 BWG	1	16 SF
10 BWG	2	32 SF
Sch 80	1	32 SF
Sch 80	2	64 SF

2. The Engineer may require that a Schedule 80 post be used in place of a 10 BWG where a sign height is abnormally high due to a fill slope.
3. Sign supports shall not be spliced except where shown. Sign support posts shall not be spliced.
4. Aluminum sign blanks shall conform to Departmental Material Specifications DMS-7110 and shall have the following minimum thicknesses: 0.080 for signs less than 7.5 sq. ft., 0.100 for signs 7.5 to 15 sq. ft., and 0.125 for signs greater than 15 sq. ft.
5. Signs that require specific supports due to reasons in addition to windloading are indicated on the "REQUIRED SUPPORT" table on this sheet.
6. For horizontal rectangular signs fabricated from flat aluminum, T-brackets are used for signs 24 inches or less in height. U-brackets are used for signs of greater height.
7. When two triangular slipbase supports are used to support a single sign, they shall not be "rigidly" connected to each other except through the sign panel. This will allow each support to act independently when impacted by an errant vehicle.
8. Wing channel shall meet ASTM A 1011 SS Gr 50 and be galvanized per ASTM A 123.
9. Excess pipe, wing channel, or windbeam shall be cut off so that it does not extend beyond the sign panel (i.e., excess support shall not be visible when the sign is viewed from the front.) Repair galvanized coating at cut support ends per Item 445, "Galvanizing."
10. Additional route markers may be added vertically, provided the total sign area does not exceed the maximum allowable amount per Note 1.
11. Additional sign clamp required on the "T-bracket" post for 24 inch height signs. Place the clamp 3 inches above bottom of sign when possible.
12. Post open ends shall be fitted with Friction Caps.
13. Sign blanks shall be the sizes and shapes shown on the plans.

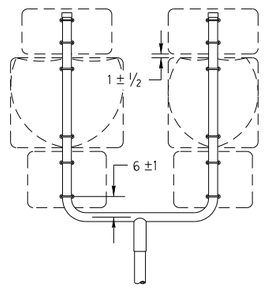

SM RD SGN ASSM TY XXXXX(1)XX(U)

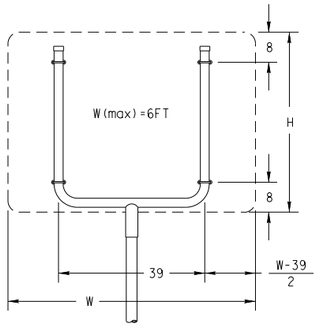

SM RD SGN ASSM TY XXXXX(1)XX(U)

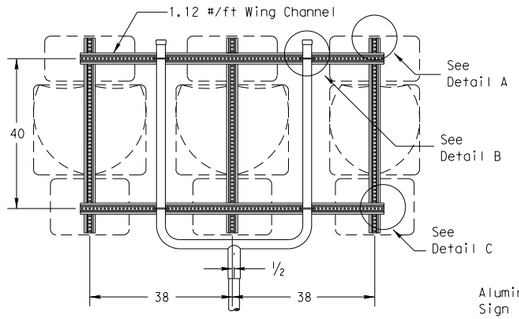

SM RD SGN ASSM TY XXXXX(1)XX(U-WC)
(See Note 11)

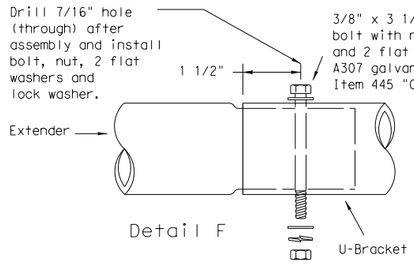

Detail F

Splices shall only be allowed behind the sign substrate.

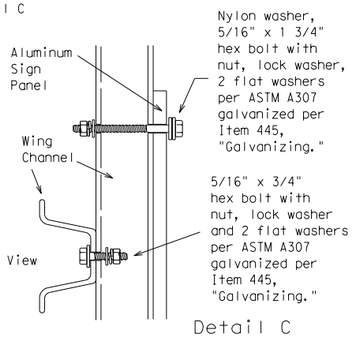

Detail C

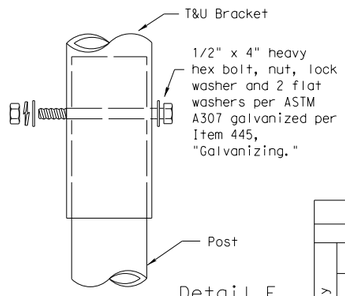

Detail E

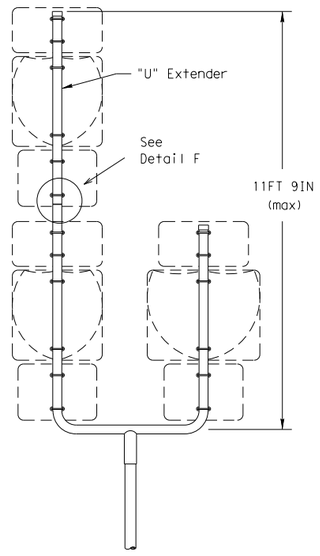

SM RD SGN ASSM TY S80(1)XX(U-1EXT)

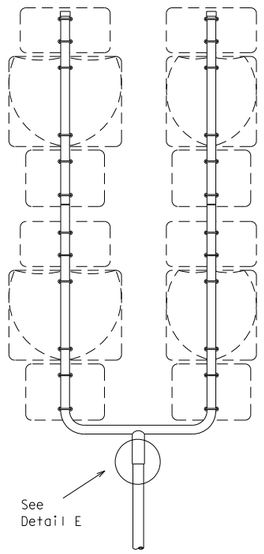

SM RD SGN ASSM TY S80(1)XX(U-2EXT)

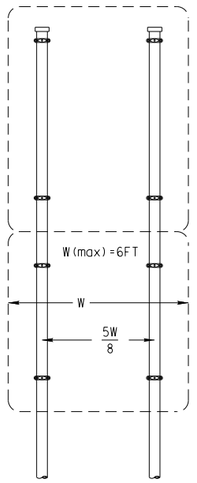

SM RD SGN ASSYM TY XXXXX(2)XX(P)

SIDE VIEW

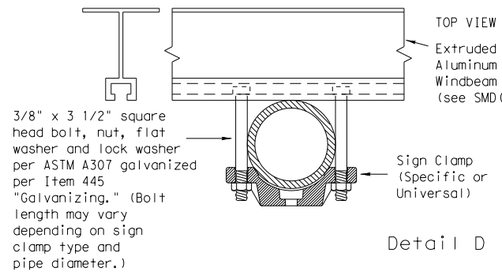

Detail D

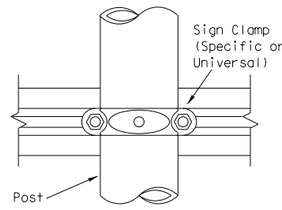

REQUIRED SUPPORT		
	SIGN DESCRIPTION	SUPPORT
Regulatory	48-inch STOP sign (R1-1)	TY 10BWG(1)XX(T) TY 10BWG(1)XX(P-BM)
	60-inch YIELD sign (R1-2)	TY 10BWG(1)XX(T) TY 10BWG(1)XX(P-BM)
	48x16-inch ONE-WAY sign (R6-1)	TY 10BWG(1)XX(T) TY 10BWG(1)XX(P-BM)
	36x48, 48x36, and 48x48-inch signs	TY 10BWG(1)XX(T)
	48x60-inch signs	TY S80(1)XX(T)
Warning	48x48-inch signs (diamond or square)	TY 10BWG(1)XX(T)
	48x60-inch signs	TY S80(1)XX(T)
	48-inch Advance School X-ing sign (S1-1)	TY 10BWG(1)XX(T)
	48-inch School X-ing sign (S2-1)	TY 10BWG(1)XX(T)
	Large Arrow sign (W1-6 & W1-7)	TY 10BWG(1)XX(T)

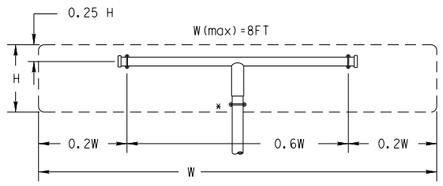

SM RD SGN ASSM TY XXXXX(1)XX(T)
(* - See Note 12)

All dimensions are in english unless detailed otherwise.

FRICTION CAP DETAIL

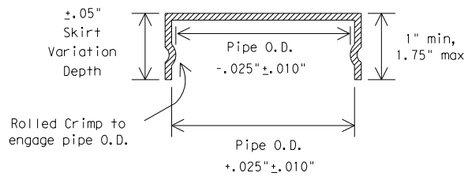

Friction caps may be manufactured from hot rolled or cold rolled steel sheets. The minimum sheet metal thickness shall be 24 gauge for all cap sizes.

The rim edges shall be reasonably straight and smooth. Caps shall be sized and formed in such a manner as to produce a drive-on friction fit and have no tendency to rock when seated on the pipe. The depth shall be sufficient to give positive protection against entrance of rainwater. They shall be free of sharp creases or indentations and show no evidence of metal fracture.

Caps shall have an electrodeposited coating of zinc in accordance with the requirements of ASTM B633 Class FE/ZN 8.

Texas Department of Transportation
Traffic Operations Division

SIGN MOUNTING DETAILS
SMALL ROADSIDE SIGNS
TRIANGULAR SLIPBASE SYSTEM

SMD(SLIP-2)-08

©TxDOT July 2002

REVISIONS	DN: TXDOT	CK: TXDOT	DW: TXDOT	CK: TXDOT
9-08	CONT	SECT	JOB	HIGHWAY
	0912	73	215	FM 270 ETC
	DIST	COUNTY		SHEET NO.
	HOU	GALVESTON		325

26C

DATE:
FILE:

I. STORMWATER POLLUTION PREVENTION

Texas Pollutant Discharge Elimination System (TPDES) TXR 150000: Stormwater Discharge Permit or Construction General Permit is required for projects with 1 or more acres disturbed soil. Projects with any disturbed soil must protect for erosion and sedimentation in accordance with Item 506. Refer to Storm Water Pollution Prevention Plan (SWP3) Houston District standard plan.

No Additional Comments

II. WORK IN OR NEAR STREAMS, WATERBODIES AND WETLANDS

United States Army Corps of Engineers (USACE) Permit is required for filling, dredging, excavating or other work in water bodies, rivers, creeks, streams, wetlands or wet areas. The Contractor must adhere to all of the terms and general conditions associated with the following permit(s). If additional work not represented in the plans is required, contact the Engineer immediately.

☐ No United States Army Corps (USACE) Permit Required

☐ Work is authorized by the United States Army Corps of Engineers (USACE) under a Nationwide Permit (NWP) without a Pre-Construction Notification (PCN). Project specific permit was not issued by USACE, therefore is not in the plan set. The USACE general conditions are in the “General Notes."

☒ Work is authorized by the United States Army Corps of Engineers (USACE) under a Nationwide Permit (NWP) with a Pre-Construction Notification (PCN). The project specific permit issued by the United States Army Corps of Engineers (USACE) is included in the plan set. The USACE general conditions are in the “General Notes."

☐ Work is authorized by the United States Army Corps of Engineers (USACE) under a Individual Permit (IP). The project specific permit issued by the United States Army Corps of Engineers (USACE) is included in the plan set.

☐ Work would be authorized by the United States Army Corps of Engineers (USACE) permit. The project specific permit issued by the USACE will be provided to the contractor.

United States Coast Guard (USCG) Permit is required for projects that involve the construction or modification (including changes to lighting) of a bridge or causeway across a water body determined to be navigable by the United States Coast Guard (USCG) under Section 9 of the Rivers and Harbors Act. If additional work not represented in the plans is required, contact the Engineer immediately.

☒ No United States Coast Guard (USCG) Coordination Required

☐ United States Coast Guard (USCG) Permit

☐ United States Coast Guard (USCG) Exemption

Additional Comments

A NWP 14 from the USACE is required for this project. Once the permit is verified bythe USACE any commitments TxDOT makes in the Permit Verification Document will be included here. The permit is anticipated to be submitted to the Corps in August 2023 and the verification is anticipated to be received by November 2023.

III. CULTURAL RESOURCES

Refer to TxDOT Standard Specifications in the event historical issues or archeological artifacts are found during construction. Upon discovery of archeological artifacts (bones, burnt rock, flint, pottery, etc.) cease work in the area and contact the Engineer immediately.

No Additional Comments

IV. VEGETATION RESOURCES

Preserve native vegetation to the extent practical. Refer to TxDOT Standard Specifications in order to comply with requirements for invasive species, beneficial landscaping and tree/brush removal.

No Additional Comments

V. FEDERAL LISTED, PROPOSED THREATENED, ENDANGERED SPECIES, CRITICAL HABITAT, STATE LISTED SPECIES, CANDIDATE SPECIES AND MIGRATORY BIRDS

If any of the listed species below are observed, cease work in the area, do not disturb species or habitat and contact the Engineer immediately.

The work may not remove active nests (from bridges, structures, or vegetation adjacent to the roadway, etc.) during nesting season (February 15 to October 1). If removal of structures or vegetation is necessary during the nesting season, the Contractor shall conduct a bird survey no more than 3 days in advance of the clearing/demolish start date. All bird surveys shall be conducted by a Field Biologist and adhere to the guidance document “Avoiding Migratory Birds and Handling Potential Violations” found in the TxDOT Environmental Compliance Toolkits at the time of the survey. (See below for Field Biologist and Ornithologist qualifications)

No Additional Comments

Field Biologist, Ornithologist – a field biologist is defined as an individual qualified to perform field investigations, presence/absence surveys and habitat surveys for protected avian species or species of concern. A mandatory bachelor’s degree in biology or a related science is required. At a minimum, the Field Biologist, Ornithologist, shall have completed and reported a minimum of three presence/absence and habitat surveys for protected avian species in the past five years. A minimum of three projects must have been conducted in Texas. Surveys shall have been performed for documentation of species in accordance with a protocol approved by USFWS or TPWD, or following generally accepted methodologies.

VI. HAZARDOUS MATERIALS OR CONTAMINATION ISSUES

Refer to TxDOT Standard Specifications in the event potentially contaminated materials are observed, such as dead or distressed vegetation, trash disposal areas, drums, canisters, barrels, leaching or seepage of substances, unusual smells or odors, or stained soil, cease work in the area and contact the Engineer immediately.

Additional Comments

Initial Site Assessment (ISA) identified several sites that have not been resolved - ENV has reviewed those sites and determined that they pose minimal risk to the project. However, if contaminated soil or ground water is encountered during construction immediately stop work in that area and contact Adam Wood, Environmental PM, Houston District at 713-802-5267.

VII. OTHER ENVIRONMENTAL ISSUES

Comments:

DATE: Jun 29, 2023
FILE:

Version 2.1

Texas Department of Transportation

TxDOT Houston District

ENVIRONMENTAL PERMITS, ISSUES AND COMMITMENTS

EPIC

FILE: EPIC Sheet.dgn	DN:	CK:	DW:	CK:
© TxDOT: March 2017	CONT	SECT	JOB	HIGHWAY
REVISIONS	0912	73	215	FM 270, ETC
UPDATED section V. text and added definition (10/17) ADDED USCG and USACE notes in Section VII (04/18)	DIST	COUNTY		SHEET NO.
	12	Galveston		326

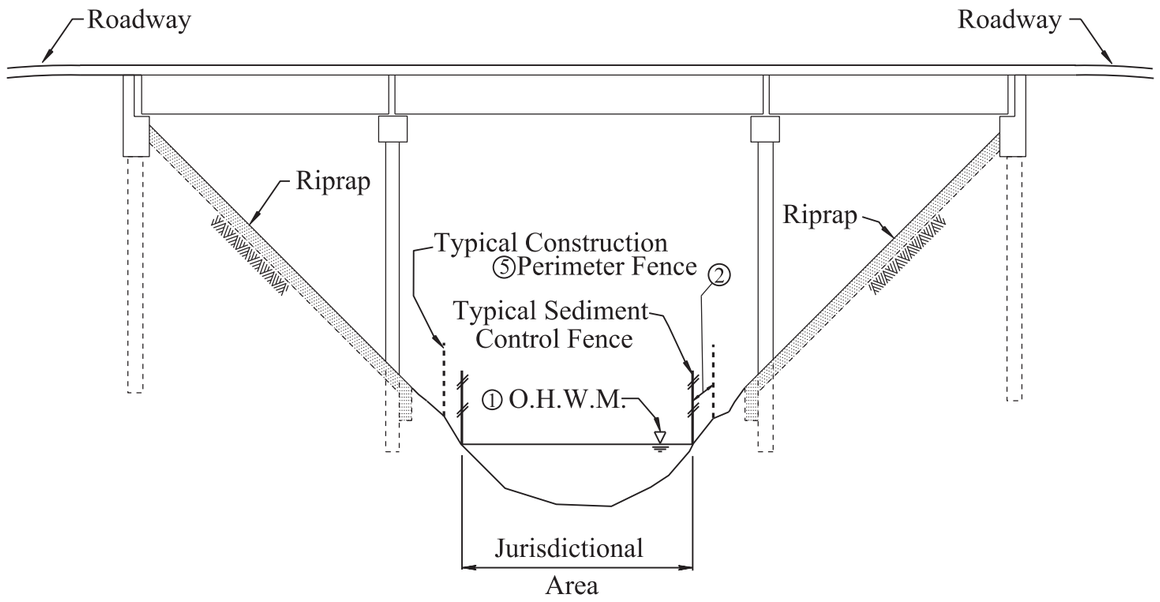

TYPICAL RELATIONSHIP OF O.H.W.M., SEDIMENT CONTROL & CONSTRUCTION FENCING, PILING/DRILL SHAFT & RIPRAP TOE WALLS

N.T.S.

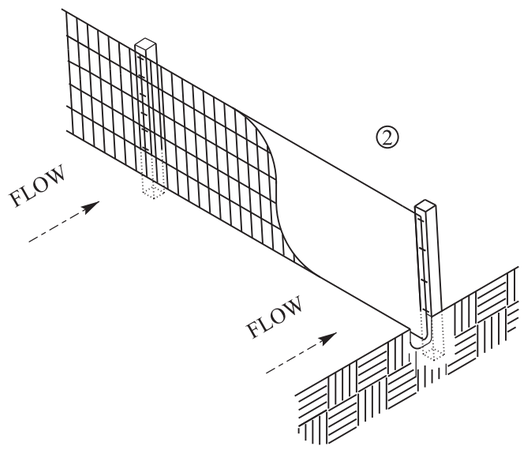

TEMPORARY SEDIMENT CONTROL FENCE

1.50" Radius, 0.50" Border, Black on White;
[WETLAND AREA] C; [DO NOT ENTER] C;
CIRCLE, DIAG LINE, RED

GENERAL DESIGN CONSIDERATIONS

1. Ordinary high water mark (elevation) (O.H.W.M.) is determined by the Environmental Project Manager and elevation is set by a Surveyor.

2. All non-permitted jurisdictional wetlands and waters within or adjacent to the project area shall be avoided and protected by signage and fencing, including both sediment control and construction fencing (see note 5). Construction equipment, materials/sediment are not allowed in the non-permitted wetlands/waters.

3. Any wetlands permitted for impacts/fill and non-permitted wetlands are shown elsewhere on plans or United States Army Corps of Engineers (USACE) permit.

4. The Contractor will be required to obtain the appropriate permits if she/he alters the construction method or deviates from the permit.

5. See item 506 for temporary sediment control fence and for construction perimeter fence. See item 502 for signs.

Texas Department of Transportation

TxDOT Houston District

ENVIRONMENTAL PERMITS, ISSUES AND COMMITMENTS

EPIC

FILE: Wetland EPIC Sheet.dgn	DN:	CK:	DW:	CK:
© TxDOT: March 2017	CONT	SECT	JOB	HIGHWAY
REVISIONS	0912	73	215	FM 270, ETC
ADDED construction fencing (06/17)	DIST	COUNTY		SHEET NO.
UPDATED typical relationship diagram (09/17)	12	GALVESTON		327
UPDATED notes 2 and 5 (09/17)				
UPDATED note 5 (05/18)				

DATE:
FILE:

SITE DESCRIPTION

PROJECT LIMITS: FM 270 FROM FM 518 TO SH 96
SH 96 FROM FM 270 TO SH 146

PROJECT DESCRIPTION: FOR THE CONSTRUCTION OF BICYCLE INFRASTRUCTURE IMPROVEMENTS CONSISTING OF SIDE PATH.

MAJOR SOIL DISTURBING ACTIVITIES: ROADWAY WIDENING, DITCH GRADING, SHARED USE PATH AND UPGRADING CULVERTS.

TOTAL PROJECT AREA: 145.55 AC

TOTAL AREA TO BE DISTURBED: 8.64 AC

WEIGHTED RUNOFF COEFFICIENT:
(AFTER CONSTRUCTION): SEE DRAINAGE AREA CALCULATION SHEETS

EXISTING CONDITION OF SOIL & VEGETATIVE
COVER AND % OF EXISTING VEGETATIVE COVER: 50% GRASSY AREA (GEOTECH NOT AVAILABLE)

NAME OF RECEIVING WATERS: GALVESTON BAY

EROSION AND SEDIMENT CONTROLS

SOIL STABILIZATION PRACTICES:

- [X] TEMPORARY SEEDING
- [X] PERMANENT PLANTING, SODDING, OR SEEDING
- [ ] MULCHING
- [ ] SOIL RETENTION BLANKET
- [ ] BUFFER ZONES
- [ ] PRESERVATION OF NATURAL RESOURCES

OTHER:

STRUCTURAL PRACTICES:

- [X] SILT FENCES
- [ ] HAY BALES
- [X] ROCK BERMS
- [ ] DIVERSION, INTERCEPTOR, OR PERIMETER DIKES
- [ ] DIVERSION, INTERCEPTOR, OR PERIMETER SWALES
- [ ] DIVERSION DIKE AND SWALE COMBINATIONS
- [ ] PIPE SLOPE DRAINS
- [ ] PAVED FLUMES
- [X] ROCK BEDDING AT CONSTRUCTION EXIT
- [ ] TIMBER MATTING AT CONSTRUCTION EXIT
- [ ] CHANNEL LINERS
- [ ] SEDIMENT TRAPS
- [ ] SEDIMENT BASINS
- [ ] STORM INLET SEDIMENT TRAP
- [ ] STONE OUTLET STRUCTURES
- [ ] CURBS AND GUTTERS
- [ ] STORM SEWERS
- [ ] VELOCITY CONTROL DEVICES
- [X] EROSION CONTROL LOGS

OTHER:

NARRATIVE - SEQUENCE OF CONSTRUCTION (STORM WATER MANAGEMENT) ACTIVITIES:

INSTALL EROSION CONTROL LOGS, SEDIMENT CONTROL FENCE, AND ROCK FILTER DAMS AS SHOWN IN PLANS.
CONSTRUCT SHARED USE PATH AND WIDEN ALONG ROADWAY FOR BIKE LANE AS SHOWN ON PLANS.
INSTALL SEEDING AS SHOWN ON PLANS.
REMOVE EROSION CONTROL LOGS, SEDIMENT CONTROL FENCE, AND ROCK FILTER DAMS AS SHOWN ON PLANS.

STORM WATER MANAGEMENT: STORM WATER WILL BE CONVEYED TO EXISTING DITCHES

OTHER EROSION AND SEDIMENT CONTROLS:

MAINTENANCE: All erosion and sediment controls will be maintained in good working order. If a repair is necessary it will be done at the earliest date possible, but no later than 7 calendar days after the surrounding exposed ground has dried sufficiently to prevent further damage from heavy equipment. The area adjacent to creeks and drainageways shall have priority followed by devices protecting storm sewer inlets.

INSPECTION: All inspections will be performed by a TxDOT inspector per one of the options below as directed by the Area Engineer
1. At least every 7 calendar days
2. At least every 14 days or after 0.5 inches or more of rainfall
An inspection and maintenance report should be made for each inspection. Based on the inspection results, the controls shall be revised according to the inspection report.

WASTE MATERIALS: The dumpster used to store all waste material will meet all state and local city solid waste management regulations. All trash and construction debris will be deposited in the dumpster. The dumpster will be emptied as necessary or as required by local regulation and the trash will be hauled to a local dump. No construction waste material will be buried on site.

HAZARDOUS WASTE (INCLUDING SPILL REPORTING): In the event of a spill which may be considered hazardous, the Houston District Safety Office shall be contacted immediately at 713-802-5962.

SANITARY WASTE: All Sanitary Waste will be collected from the portable units as necessary or as required by local regulations by a licensed sanitary waste management contractor.

OFFSITE VEHICLE TRACKING:

- [ ] HAUL ROADS DAMPENED FOR DUST CONTROL
- [ ] LOADED HAUL TRUCKS TO BE COVERED WITH TARPAULIN
- [ ] EXCESS DIRT ON ROAD REMOVED DAILY
- [ ] STABILIZED CONSTRUCTION ENTRANCE

OTHER:

REMARKS: Disposal areas, stockpiles, and haul roads shall be constructed in a manner that will minimize and control the sediment that may enter receiving waterways. Disposal areas shall not be located in any waterway, waterbody or streambed. Construction staging areas and vehicle maintenance areas shall be constructed by the contractor in a manner which minimizes the runoff of all pollutants. All waterways shall be cleared as soon as practical of temporary embankments, temporary bridges, matting, falsework, piling, debris, and other obstructions placed during construction operations that are not part of the finished work.

STATE OF TEXAS
GREGORIO GARCIA
101077
LICENSED
PROFESSIONAL ENGINEER

07/26/2023

Texas Department of Transportation
Houston District

TxDOT STORM WATER POLLUTION PREVENTION PLAN

SWP3

FILE: STDG1.DGN	DN: TxDot	CK: TxDot	DW: TxDot	CK: TxDot
©TxDOT JANUARY 2007	DIST	FED REG	PROJECT NO.	SHEET
REVISIONS 9/2010 INSPECTION NOTE 9/2013 INSPECTION NOTE 11/2013 SW3P TO SWP3 03/2015 2014 SPECS	HOU	6		328
	COUNTY	CONTROL	SECT	JOB	HIGHWAY
	GALVESTON	0912	73	215	FM 270 ETC

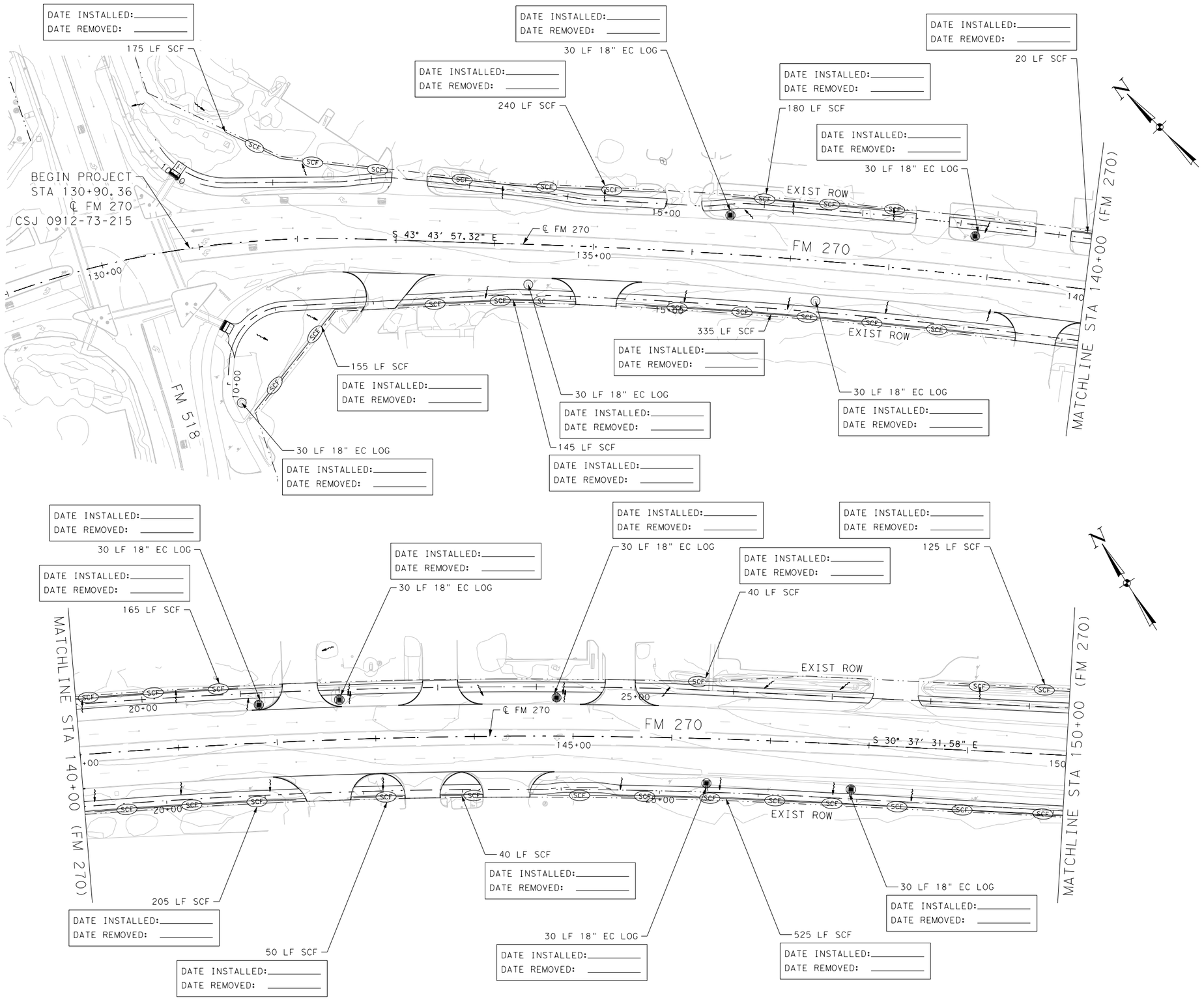

0' 25' 50' 100'

LEGEND:

- SCF — TEMPORARY SEDIMENT CONTROL FENCE
- RFD# — ROCK FILTER DAM
- EROSION CONTROL LOG
- SEEDING
- WETLANDS
- DRAINAGE FLOW ARROW

NOTES:

1. REFER TO SW3P STANDARD SHEETS FOR DETAILS.
2. INSTALLED MEASURES SHALL REMAIN IN PLACE AND SHALL BE MAINTAINED THROUGHOUT DURATION OF PROJECT OR AS DIRECTED BY THE ENGINEER.
3. SW3P MEASURES SHOWN ARE MINIMUM REQUIREMENTS BASED UPON PROJECT DESIGN. INSTALLATION OF SW3P MEASURES WILL BE AS SHOWN AND MODIFIED TO ACCOMMODATE ACTUAL FIELD CONDITIONS.
4. CONSTRUCTION EXITS TO BE LOCATED IN THE FIELD AND APPROVED BY THE ENGINEER. THE SIZE OF THE CONSTRUCTION EXIT WILL BE 78 SY (50'X14'). REFER TO STANDARD EC(3) FOR DETAILS.
5. CONTRACTOR MUST GET AN APPROVED SEEDING MIX FOR USE IN WETLAND AREAS.

NO.	DATE	REVISION	APPROVED

STATE OF TEXAS
GREGORIO GARCIA
101077
LICENSED
PROFESSIONAL ENGINEER

07/26/2023

Texas Department of Transportation
©2023

SANCHEZ-SALAZAR & ASSOCIATES, LLC
12770 Cimarron Path, Ste. 118
San Antonio, TX 78249
Phone: (210) 314-5458
TBPELS Registration No. 15685

SH 96, FM 270
SW3P
LAYOUT

BEGIN PROJECT TO STA 150+00

SHEET 1 OF 16

DRAWN	FED.RD. DIV.NO.	FEDERAL AID PROJECT NO.		HIGHWAY NO.
RO	06			FM 270,ETC
DESIGNED	STATE	DIST.	COUNTY	SHEET NO.
RO	TEXAS	HOUSTON	GALVESTON	329
CHECKED	CONT.	SECT.	JOB	
GG	0912	73	215	
APPROVED				
GG				

DATE:7/26/2023 9:12:33 AM USER:rortiz
FILE:c:\bms\pwe101-01\rene.ortiz\dms22652\LCBF_SW3P_01.dgn
PLOTDRIVER: cpypdf_ANSIB.pltcfg PENTABLE:LCBF.tbl

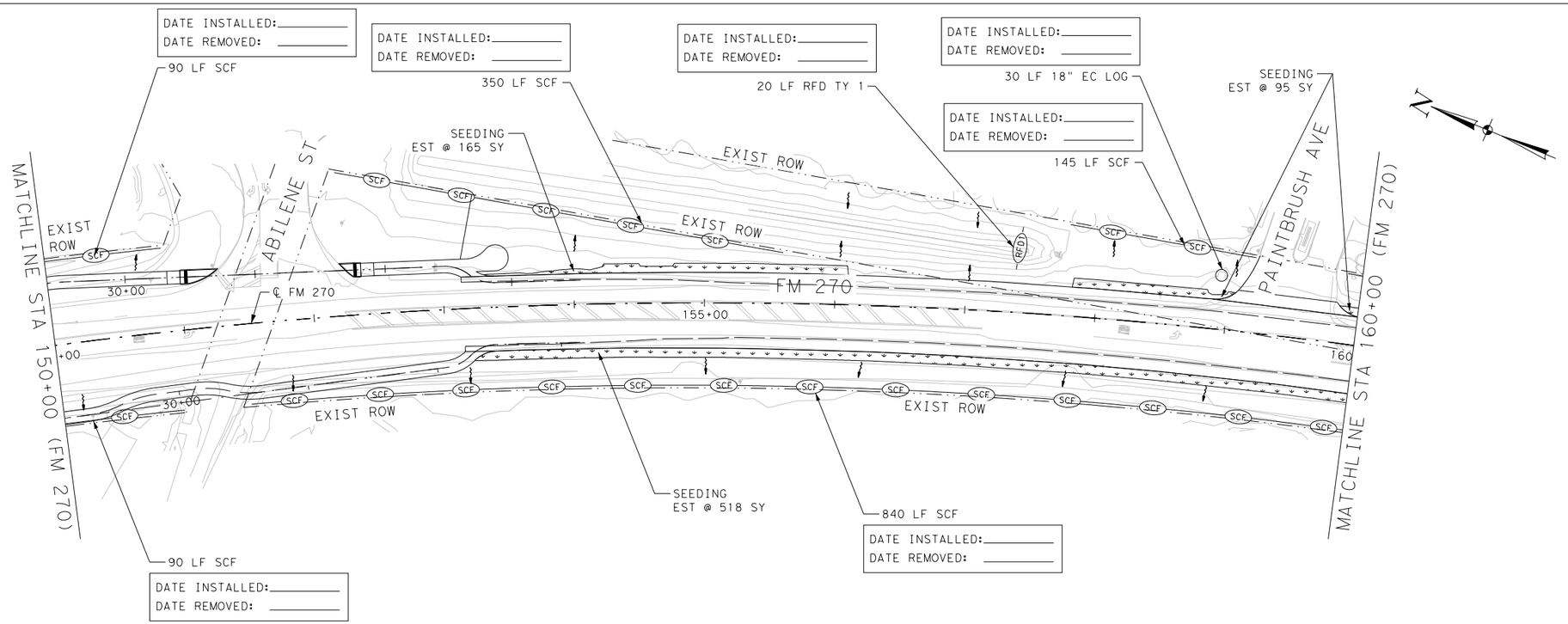

0' 25' 50' 100'

LEGEND:

- SCF — TEMPORARY SEDIMENT CONTROL FENCE
- RFD# — ROCK FILTER DAM
- EROSION CONTROL LOG
- SEEDING
- WETLANDS
- DRAINAGE FLOW ARROW

NOTES:

1. REFER TO SW3P STANDARD SHEETS FOR DETAILS.
2. INSTALLED MEASURES SHALL REMAIN IN PLACE AND SHALL BE MAINTAINED THROUGHOUT DURATION OF PROJECT OR AS DIRECTED BY THE ENGINEER.
3. SW3P MEASURES SHOWN ARE MINIMUM REQUIREMENTS BASED UPON PROJECT DESIGN. INSTALLATION OF SW3P MEASURES WILL BE AS SHOWN AND MODIFIED TO ACCOMMODATE ACTUAL FIELD CONDITIONS.
4. CONSTRUCTION EXITS TO BE LOCATED IN THE FIELD AND APPROVED BY THE ENGINEER. THE SIZE OF THE CONSTRUCTION EXIT WILL BE 78 SY (50'X14'). REFER TO STANDARD EC(3) FOR DETAILS.
5. CONTRACTOR MUST GET AN APPROVED SEEDING MIX FOR USE IN WETLAND AREAS.

NO.	DATE	REVISION	APPROVED

STATE OF TEXAS
GREGORIO GARCIA
101077
LICENSED
PROFESSIONAL ENGINEER

07/26/2023

Texas Department of Transportation
©2023

SANCHEZ-SALAZAR & ASSOCIATES, LLC
12770 Cimarron Path, Ste. 118
San Antonio, TX 78249
Phone: (210) 314-5458
TBPELS Registration No. 15685

SH 96, FM 270
SW3P
LAYOUT

STA 150+00 TO STA 170+00

SHEET 2 OF 16

DRAWN	FED.RD. DIV.NO.	FEDERAL AID PROJECT NO.		HIGHWAY NO.
RO	06			FM 270,ETC
DESIGNED	STATE	DIST.	COUNTY	SHEET NO.
RO	TEXAS	HOUSTON	GALVESTON	330
CHECKED	CONT.	SECT.	JOB	
GG	0912	73	215	
APPROVED				
GG				

PLOTDRIVER: cpypdf_ANSIB.pltcfg PENTABLE: LCBF.tbl
DATE: 7/26/2023 9:12:36 AM USER: rortiz
FILE: c:\bms\pwe101-01\rene.ortiz\dms22652\LCBF_SW3P_02.dgn

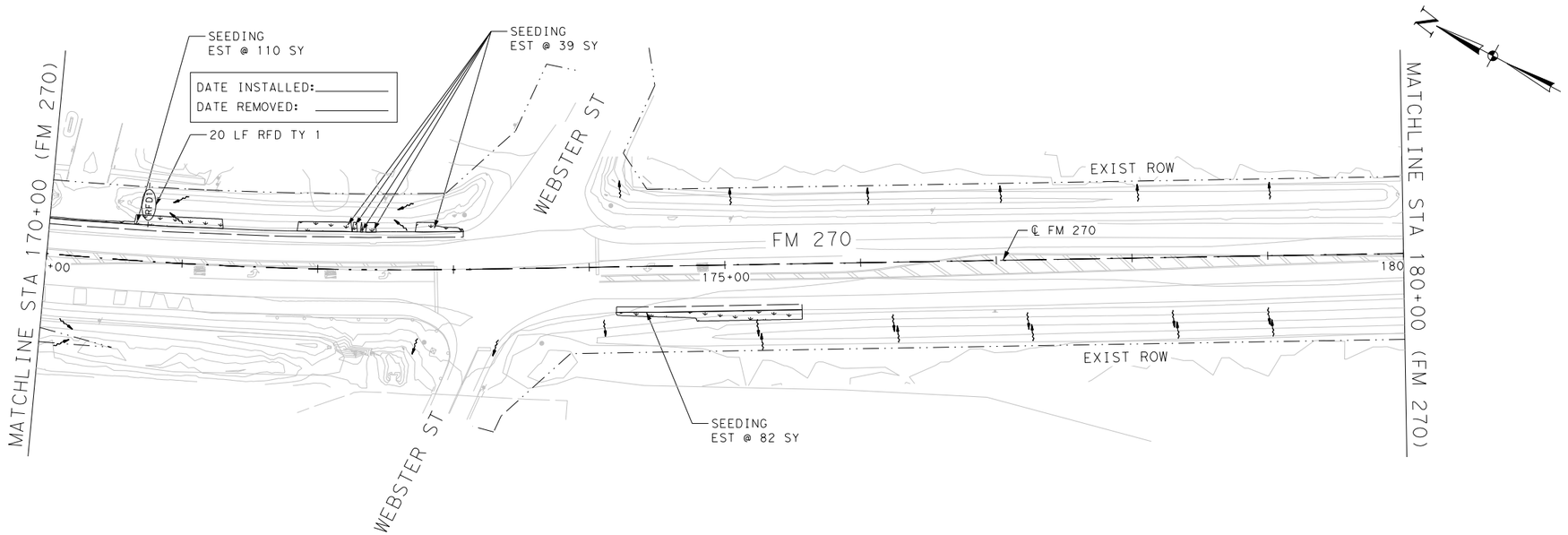

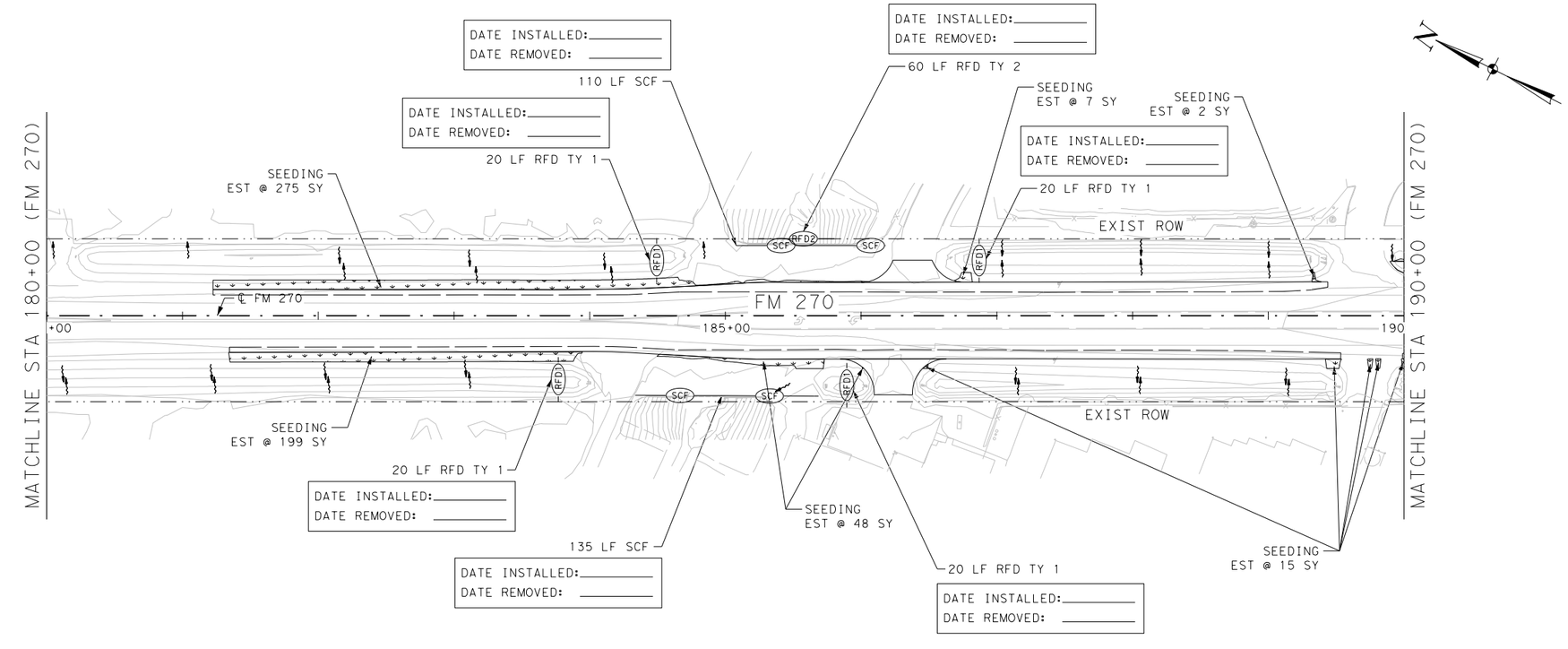

0' 25' 50' 100'

LEGEND:

- SCF — TEMPORARY SEDIMENT CONTROL FENCE
- RFD# — ROCK FILTER DAM
- EROSION CONTROL LOG
- SEEDING
- WETLANDS
- DRAINAGE FLOW ARROW

NOTES:

1. REFER TO SW3P STANDARD SHEETS FOR DETAILS.
2. INSTALLED MEASURES SHALL REMAIN IN PLACE AND SHALL BE MAINTAINED THROUGHOUT DURATION OF PROJECT OR AS DIRECTED BY THE ENGINEER.
3. SW3P MEASURES SHOWN ARE MINIMUM REQUIREMENTS BASED UPON PROJECT DESIGN. INSTALLATION OF SW3P MEASURES WILL BE AS SHOWN AND MODIFIED TO ACCOMMODATE ACTUAL FIELD CONDITIONS.
4. CONSTRUCTION EXITS TO BE LOCATED IN THE FIELD AND APPROVED BY THE ENGINEER. THE SIZE OF THE CONSTRUCTION EXIT WILL BE 78 SY (50'X14'). REFER TO STANDARD EC(3) FOR DETAILS.
5. CONTRACTOR MUST GET AN APPROVED SEEDING MIX FOR USE IN WETLAND AREAS.

NO.	DATE	REVISION	APPROVED

STATE OF TEXAS
GREGORIO GARCIA
101077
LICENSED
PROFESSIONAL ENGINEER

07/26/2023

Texas Department of Transportation
©2023

SANCHEZ-SALAZAR & ASSOCIATES, LLC
12770 Cimarron Path, Ste. 118
San Antonio, TX 78249
Phone: (210) 314-5458
TBPELS Registration No. 15685

SH 96, FM 270
SW3P
LAYOUT

STA 170+00 TO STA 190+00

SHEET 3 OF 16

DRAWN	FED.RD. DIV.NO.	FEDERAL AID PROJECT NO.		HIGHWAY NO.
RO	06			FM 270,ETC
DESIGNED RO	STATE	DIST.	COUNTY	SHEET NO.
CHECKED GG	TEXAS	HOUSTON	GALVESTON	331
APPROVED GG	CONT.	SECT.	JOB	
	0912	73	215	

PLOTDRIVER: cpypdf_ANSIB.pltcfg PENTABLE: LCBF.tbl
DATE: 7/26/2023 9:12:38 AM USER: rortiz
FILE: c:\bms\pwe101-01\rene.ortiz\dms22652\LCBF_SW3P_03.dgn

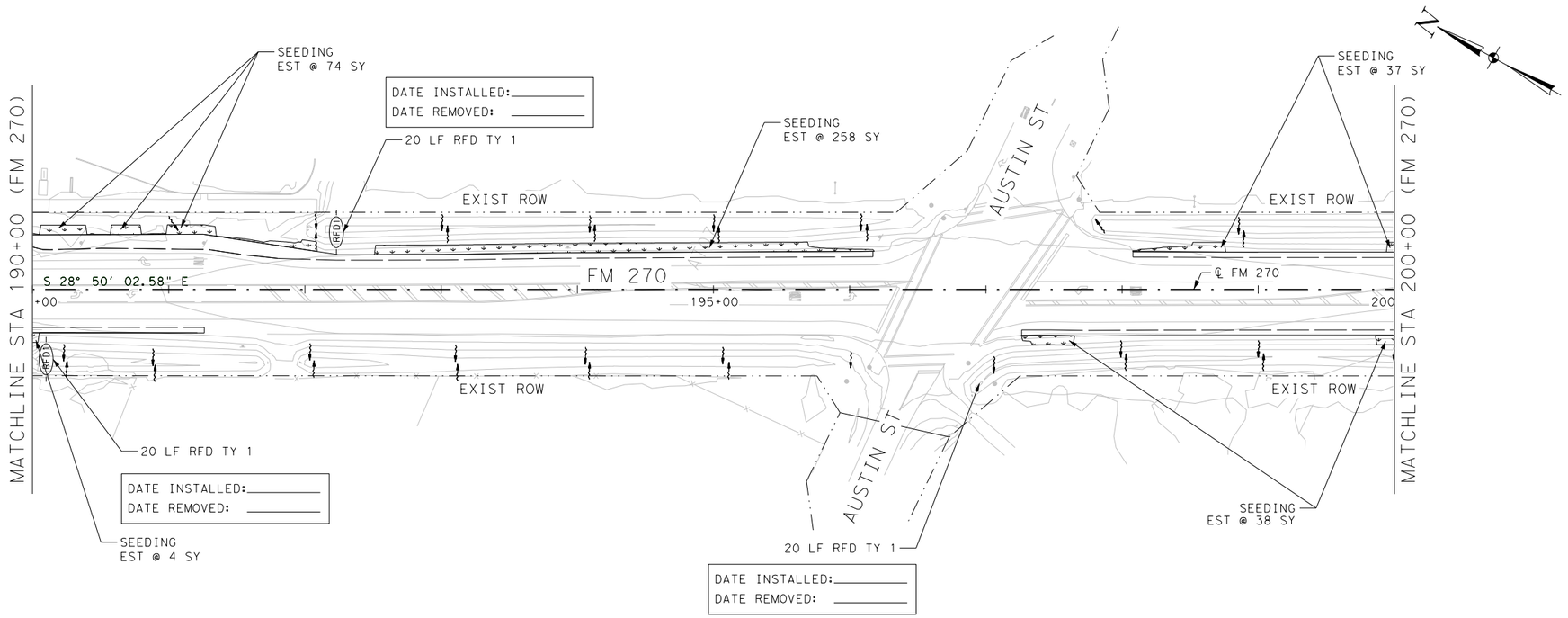

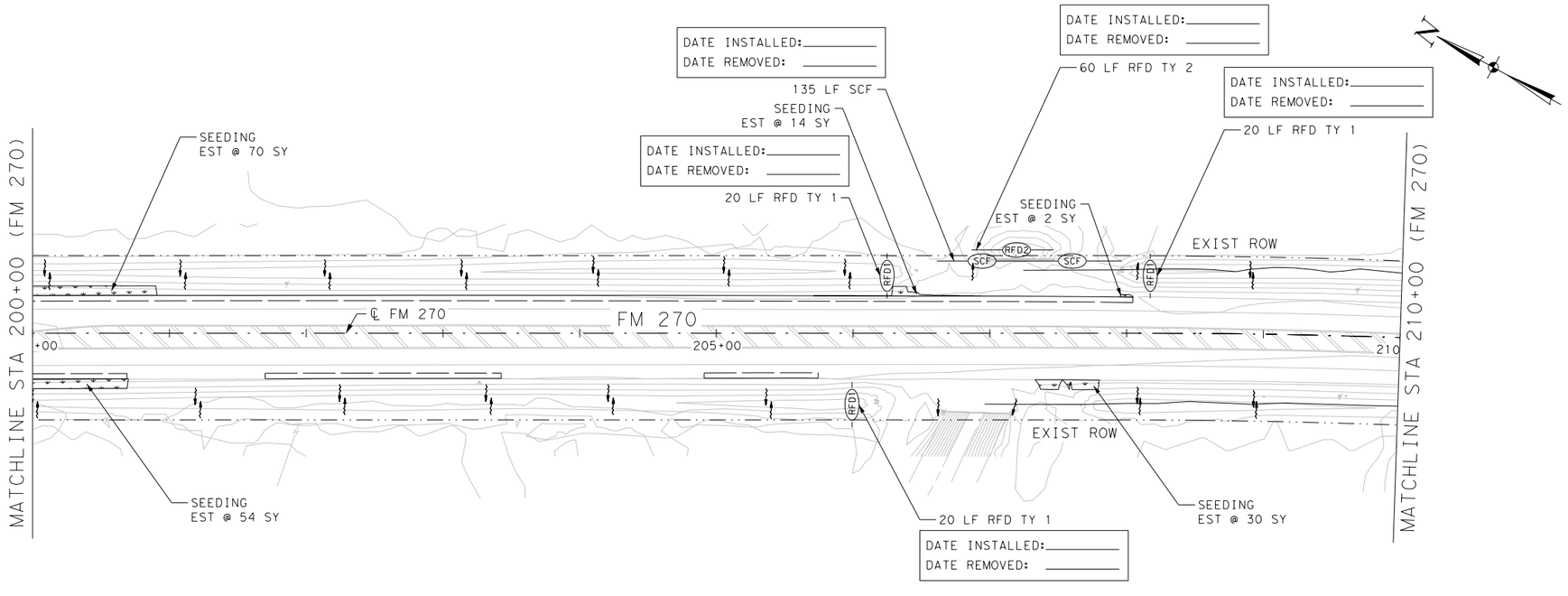

0' 25' 50' 100'

LEGEND:

- SCF — TEMPORARY SEDIMENT CONTROL FENCE
- RFD# — ROCK FILTER DAM
- EROSION CONTROL LOG
- SEEDING
- WETLANDS
- DRAINAGE FLOW ARROW

NOTES:

1. REFER TO SW3P STANDARD SHEETS FOR DETAILS.
2. INSTALLED MEASURES SHALL REMAIN IN PLACE AND SHALL BE MAINTAINED THROUGHOUT DURATION OF PROJECT OR AS DIRECTED BY THE ENGINEER.
3. SW3P MEASURES SHOWN ARE MINIMUM REQUIREMENTS BASED UPON PROJECT DESIGN. INSTALLATION OF SW3P MEASURES WILL BE AS SHOWN AND MODIFIED TO ACCOMMODATE ACTUAL FIELD CONDITIONS.
4. CONSTRUCTION EXITS TO BE LOCATED IN THE FIELD AND APPROVED BY THE ENGINEER. THE SIZE OF THE CONSTRUCTION EXIT WILL BE 78 SY (50'X14'). REFER TO STANDARD EC(3) FOR DETAILS.
5. CONTRACTOR MUST GET AN APPROVED SEEDING MIX FOR USE IN WETLAND AREAS.

NO.	DATE	REVISION	APPROVED

STATE OF TEXAS
GREGORIO GARCIA
101077
LICENSED
PROFESSIONAL ENGINEER

07/26/2023

Texas Department of Transportation
©2023

SANCHEZ-SALAZAR & ASSOCIATES, LLC
12770 Cimarron Path, Ste. 118
San Antonio, TX 78249
Phone: (210) 314-5458
TBPELS Registration No. 15685

SH 96, FM 270
SW3P
LAYOUT

STA 190+00 TO STA 210+00

DRAWN	FED.RD. DIV.NO.	FEDERAL AID PROJECT NO.		HIGHWAY NO.
RO	06			FM 270,ETC
DESIGNED	STATE	DIST.	COUNTY	SHEET NO.
RO	TEXAS	HOUSTON	GALVESTON	332
CHECKED	CONT.	SECT.	JOB	
GG	0912	73	215	
APPROVED				
GG				

DATE:7/26/2023 9:12:41 AM USER:rortiz
FILE:c:\bms\pwe101-01\rene.ortiz\dms22652\LCBF_SW3P_04.dgn
PLOTDRIVER: cypdf_ANSIB.pltcfg PENTABLE:LCBF.tbl

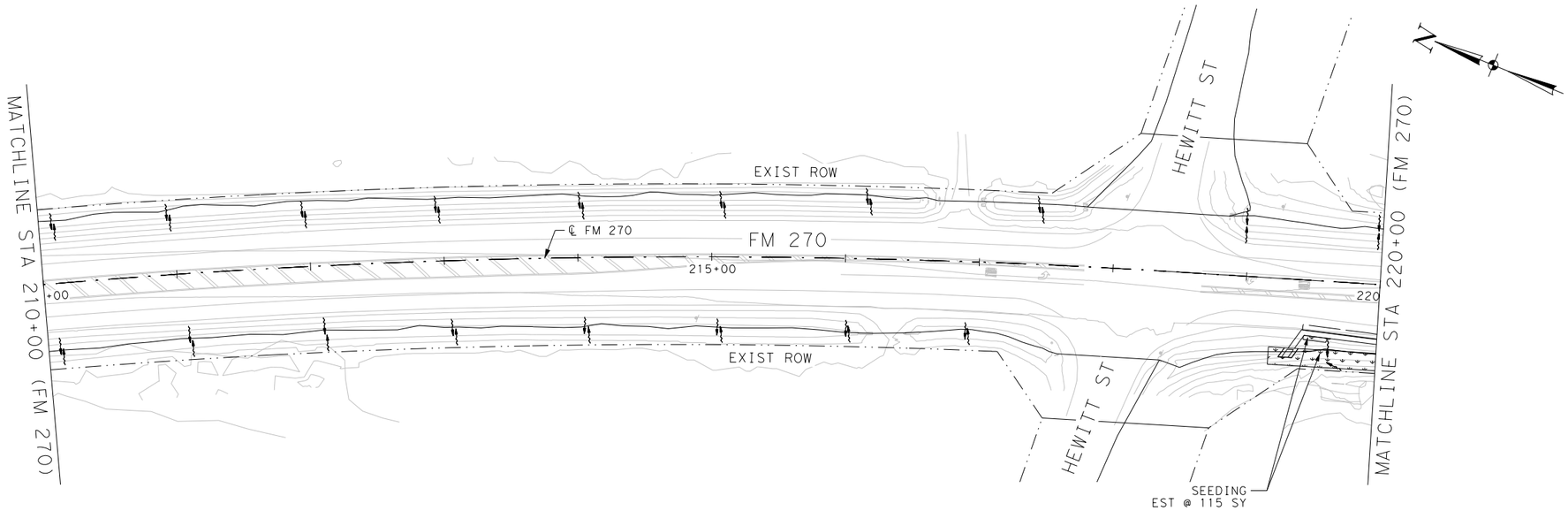

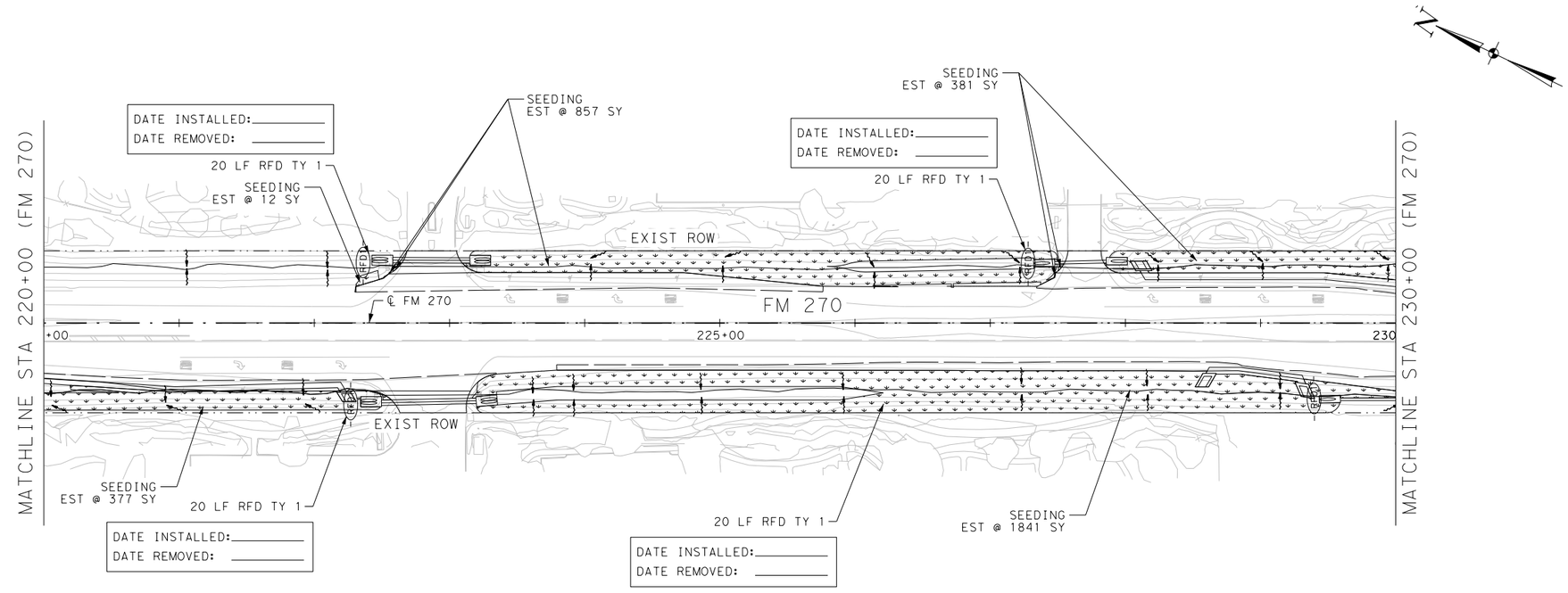

0' 25' 50' 100'

LEGEND:

- SCF — TEMPORARY SEDIMENT CONTROL FENCE
- RFD# — ROCK FILTER DAM
- EROSION CONTROL LOG
- SEEDING
- WETLANDS
- DRAINAGE FLOW ARROW

NOTES:

1. REFER TO SW3P STANDARD SHEETS FOR DETAILS.
2. INSTALLED MEASURES SHALL REMAIN IN PLACE AND SHALL BE MAINTAINED THROUGHOUT DURATION OF PROJECT OR AS DIRECTED BY THE ENGINEER.
3. SW3P MEASURES SHOWN ARE MINIMUM REQUIREMENTS BASED UPON PROJECT DESIGN. INSTALLATION OF SW3P MEASURES WILL BE AS SHOWN AND MODIFIED TO ACCOMMODATE ACTUAL FIELD CONDITIONS.
4. CONSTRUCTION EXITS TO BE LOCATED IN THE FIELD AND APPROVED BY THE ENGINEER. THE SIZE OF THE CONSTRUCTION EXIT WILL BE 78 SY (50'X14'). REFER TO STANDARD EC(3) FOR DETAILS.
5. CONTRACTOR MUST GET AN APPROVED SEEDING MIX FOR USE IN WETLAND AREAS.

NO.	DATE	REVISION	APPROVED

STATE OF TEXAS
GREGORIO GARCIA
101077
LICENSED
PROFESSIONAL ENGINEER

07/26/2023

Texas Department of Transportation
©2023

SANCHEZ-SALAZAR & ASSOCIATES, LLC
12770 Cimarron Path, Ste. 118
San Antonio, TX 78249
Phone: (210) 314-5458
TBPELS Registration No. 15685

SH 96, FM 270
SW3P
LAYOUT

STA 210+00 TO STA 230+00

SHEET 5 OF 16

DRAWN	FED.RD. DIV.NO.	FEDERAL AID PROJECT NO.		HIGHWAY NO.
RO	06			FM 270,ETC
DESIGNED	STATE	DIST.	COUNTY	SHEET NO.
RO	TEXAS	HOUSTON	GALVESTON	333
CHECKED	CONT.	SECT.	JOB	
GG	0912	73	215	
APPROVED				
GG				

PLOTDRIVER: cpypdf_ANSIB.pltcfg PENTABLE:LCBF.tbl
DATE:7/26/2023 9:12:44 AM USER:rortiz
FILE:c:\bms\pwe101-01\rene.ortiz\dms22652\LCBF_SW3P_05.dgn

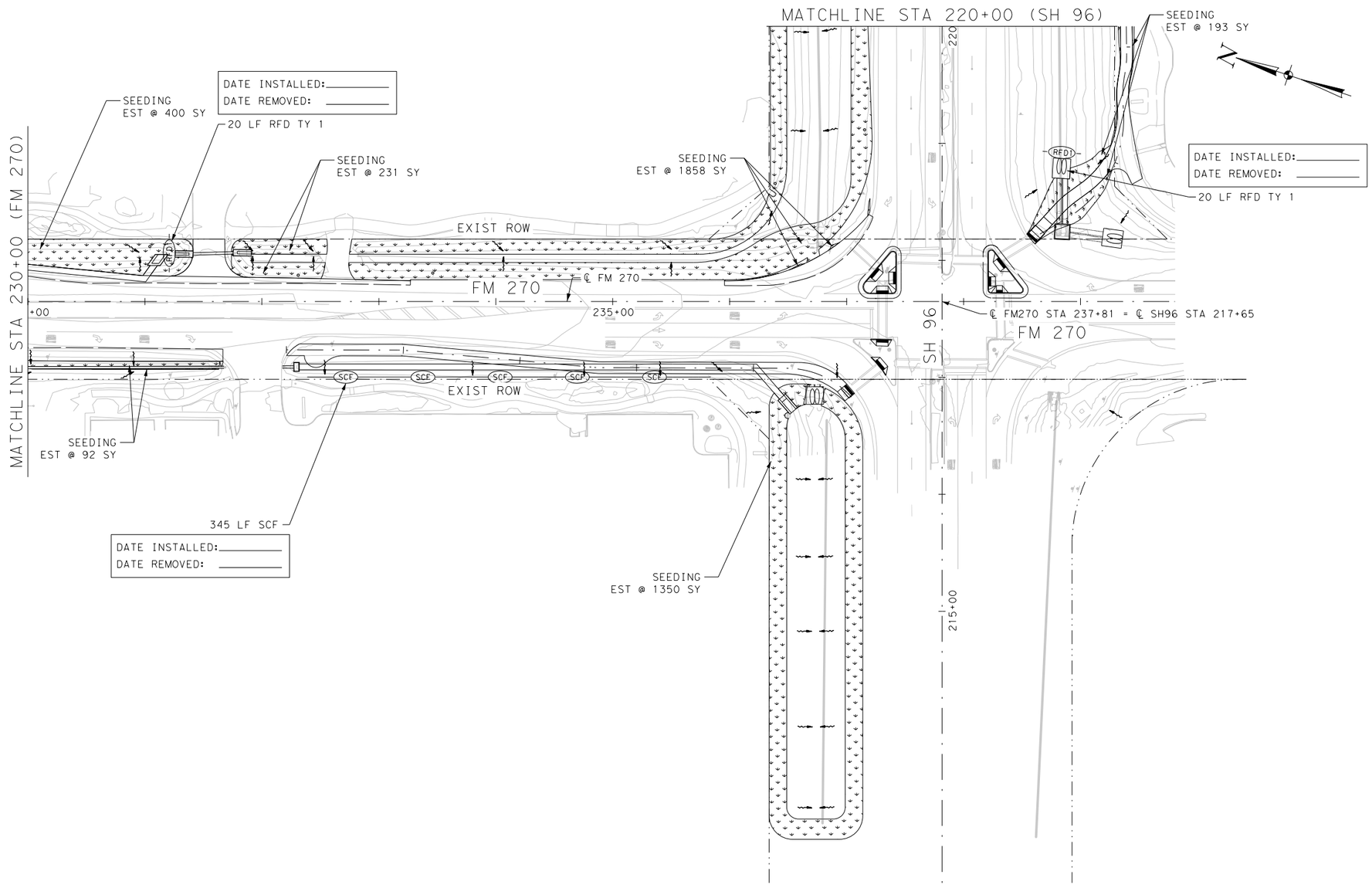

0′ 25′ 50′ 100′

LEGEND:

- SCF — TEMPORARY SEDIMENT CONTROL FENCE
- RFD# — ROCK FILTER DAM
- EROSION CONTROL LOG
- SEEDING
- WETLANDS
- DRAINAGE FLOW ARROW

NOTES:

1. REFER TO SW3P STANDARD SHEETS FOR DETAILS.
2. INSTALLED MEASURES SHALL REMAIN IN PLACE AND SHALL BE MAINTAINED THROUGHOUT DURATION OF PROJECT OR AS DIRECTED BY THE ENGINEER.
3. SW3P MEASURES SHOWN ARE MINIMUM REQUIREMENTS BASED UPON PROJECT DESIGN. INSTALLATION OF SW3P MEASURES WILL BE AS SHOWN AND MODIFIED TO ACCOMMODATE ACTUAL FIELD CONDITIONS.
4. CONSTRUCTION EXITS TO BE LOCATED IN THE FIELD AND APPROVED BY THE ENGINEER. THE SIZE OF THE CONSTRUCTION EXIT WILL BE 78 SY (50′X14′). REFER TO STANDARD EC(3) FOR DETAILS.
5. CONTRACTOR MUST GET AN APPROVED SEEDING MIX FOR USE IN WETLAND AREAS.

NO.	DATE	REVISION	APPROVED

STATE OF TEXAS
GREGORIO GARCIA
101077
LICENSED
PROFESSIONAL ENGINEER

07/26/2023

Texas Department of Transportation
©2023

SANCHEZ-SALAZAR & ASSOCIATES, LLC
12770 Cimarron Path, Ste. 118
San Antonio, TX 78249
Phone: (210) 314-5458
TBPELS Registration No. 15685

SH 96, FM 270
SW3P
LAYOUT
STA 230+00 TO END, BEGIN TO STA 225+00

SHEET 6 OF 16

DRAWN	FED.RD. DIV.NO.	FEDERAL AID PROJECT NO.		HIGHWAY NO.
RO	06			FM 270, ETC
DESIGNED	STATE	DIST.	COUNTY	SHEET NO.
RO	TEXAS	HOUSTON	GALVESTON	334
CHECKED	CONT.	SECT.	JOB	
GG	0912	73	215	
APPROVED				
GG				

PLOTDRIVER: cpypdf_ANSIB.pltcfg PENTABLE: LCBF.tbl
DATE: 7/26/2023 9:12:49 AM USER: rortiz
FILE: c:\bms\pwe101-01\rene.ortiz\dms22652\LCBF_SW3P_06.dgn

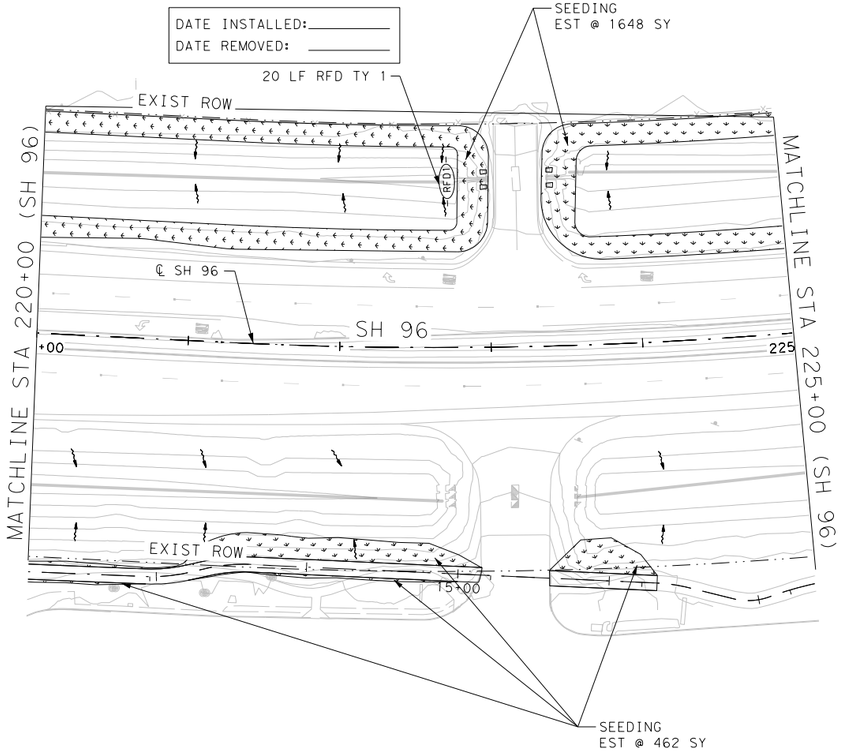

0′ 25′ 50′ 100′

LEGEND:

- SCF — TEMPORARY SEDIMENT CONTROL FENCE
- RFD# — ROCK FILTER DAM
- EROSION CONTROL LOG
- SEEDING
- WETLANDS
- DRAINAGE FLOW ARROW

NOTES:

1. REFER TO SW3P STANDARD SHEETS FOR DETAILS.
2. INSTALLED MEASURES SHALL REMAIN IN PLACE AND SHALL BE MAINTAINED THROUGHOUT DURATION OF PROJECT OR AS DIRECTED BY THE ENGINEER.
3. SW3P MEASURES SHOWN ARE MINIMUM REQUIREMENTS BASED UPON PROJECT DESIGN. INSTALLATION OF SW3P MEASURES WILL BE AS SHOWN AND MODIFIED TO ACCOMMODATE ACTUAL FIELD CONDITIONS.
4. CONSTRUCTION EXITS TO BE LOCATED IN THE FIELD AND APPROVED BY THE ENGINEER. THE SIZE OF THE CONSTRUCTION EXIT WILL BE 78 SY (50′X14′). REFER TO STANDARD EC(3) FOR DETAILS.
5. CONTRACTOR MUST GET AN APPROVED SEEDING MIX FOR USE IN WETLAND AREAS.

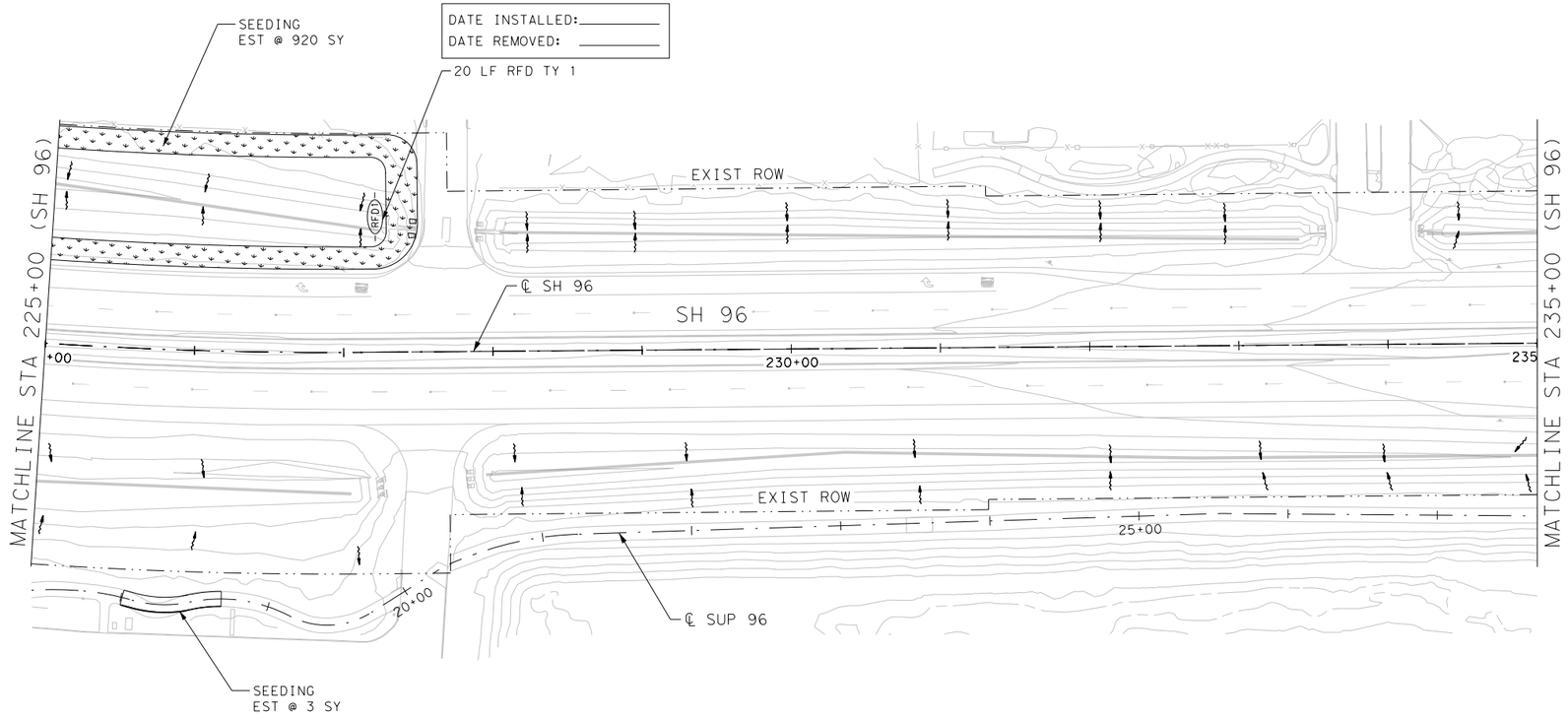

NO.	DATE	REVISION	APPROVED

STATE OF TEXAS
GREGORIO GARCIA
101077
LICENSED
PROFESSIONAL ENGINEER

07/26/2023

Texas Department of Transportation
©2023

SANCHEZ-SALAZAR & ASSOCIATES, LLC
12770 Cimarron Path, Ste. 118
San Antonio, TX 78249
Phone: (210) 314-5458
TBPELS Registration No. 15685

SH 96, FM 270
SW3P
LAYOUT

STA 220+00 TO STA 235+00

SHEET 7 OF 16

DRAWN	FED.RD. DIV.NO.	FEDERAL AID PROJECT NO.		HIGHWAY NO.
RO	06			FM 270, ETC
DESIGNED	STATE	DIST.	COUNTY	SHEET NO.
RO	TEXAS	HOUSTON	GALVESTON	335
CHECKED	CONT.	SECT.	JOB	
GG	0912	73	215	
APPROVED				
GG				

PLOTDRIVER: cpypdf_ANSIB.pltcfg PENTABLE: LCBF.tbl
DATE:7/26/2023 9:12:54 AM USER:rortiz
FILE:c:\bms\pwe101-01\rene.ortiz\dms22652\LCBF_SW3P_07.dgn

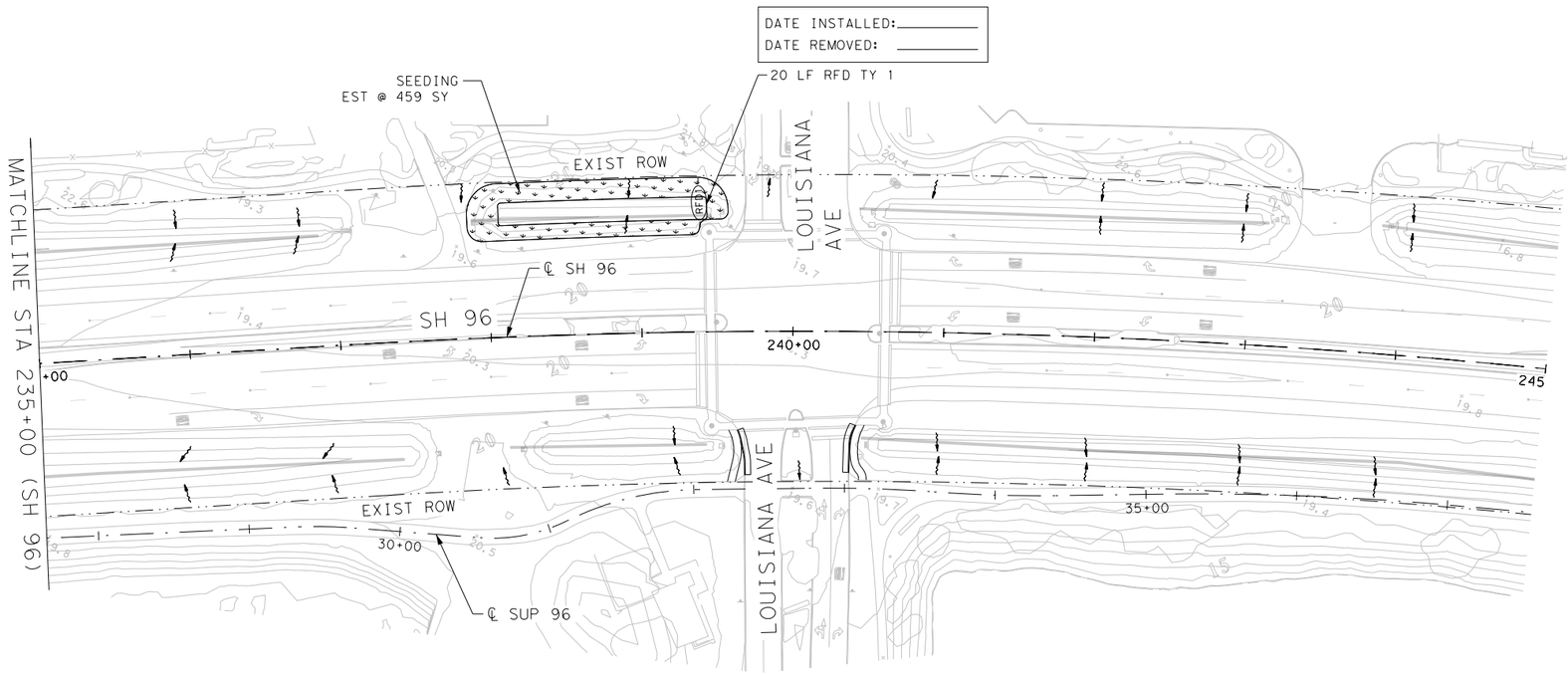

0′ 25′ 50′ 100′

LEGEND:

- SCF — TEMPORARY SEDIMENT CONTROL FENCE
- RFD — ROCK FILTER DAM
- EROSION CONTROL LOG
- SEEDING
- WETLANDS
- DRAINAGE FLOW ARROW

NOTES:

1. REFER TO SW3P STANDARD SHEETS FOR DETAILS.
2. INSTALLED MEASURES SHALL REMAIN IN PLACE AND SHALL BE MAINTAINED THROUGHOUT DURATION OF PROJECT OR AS DIRECTED BY THE ENGINEER.
3. SW3P MEASURES SHOWN ARE MINIMUM REQUIREMENTS BASED UPON PROJECT DESIGN. INSTALLATION OF SW3P MEASURES WILL BE AS SHOWN AND MODIFIED TO ACCOMMODATE ACTUAL FIELD CONDITIONS.
4. CONSTRUCTION EXITS TO BE LOCATED IN THE FIELD AND APPROVED BY THE ENGINEER. THE SIZE OF THE CONSTRUCTION EXIT WILL BE 78 SY (50′X14′). REFER TO STANDARD EC(3) FOR DETAILS.
5. CONTRACTOR MUST GET AN APPROVED SEEDING MIX FOR USE IN WETLAND AREAS.

NO.	DATE	REVISION	APPROVED

GREGORIO GARCIA
101077
LICENSED
PROFESSIONAL ENGINEER
STATE OF TEXAS

07/26/2023

Texas Department of Transportation
©2023

SANCHEZ-SALAZAR & ASSOCIATES, LLC
12770 Cimarron Path, Ste. 118
San Antonio, TX 78249
Phone: (210) 314-5458
TBPELS Registration No. 15685

SH 96, FM 270
SW3P
LAYOUT
STA 235+00 TO STA 245+00

SHEET 8 OF 16

DRAWN	FED.RD. DIV.NO.	FEDERAL AID PROJECT NO.		HIGHWAY NO.
RO	06			FM 270,ETC
DESIGNED	STATE	DIST.	COUNTY	SHEET NO.
RO	TEXAS	HOUSTON	GALVESTON	336
CHECKED	CONT.	SECT.	JOB	
GG	0912	73	215	
APPROVED				
GG				

PLOTDRIVER: cpypdf_ANSIB.pltcfg PENTABLE:LCBF.tbl
DATE:7/26/2023 9:12:59 AM USER:rortiz
FILE:c:\bms\pwe101-01\rene.ortiz\dms22652\LCBF_SW3P_08.dgn

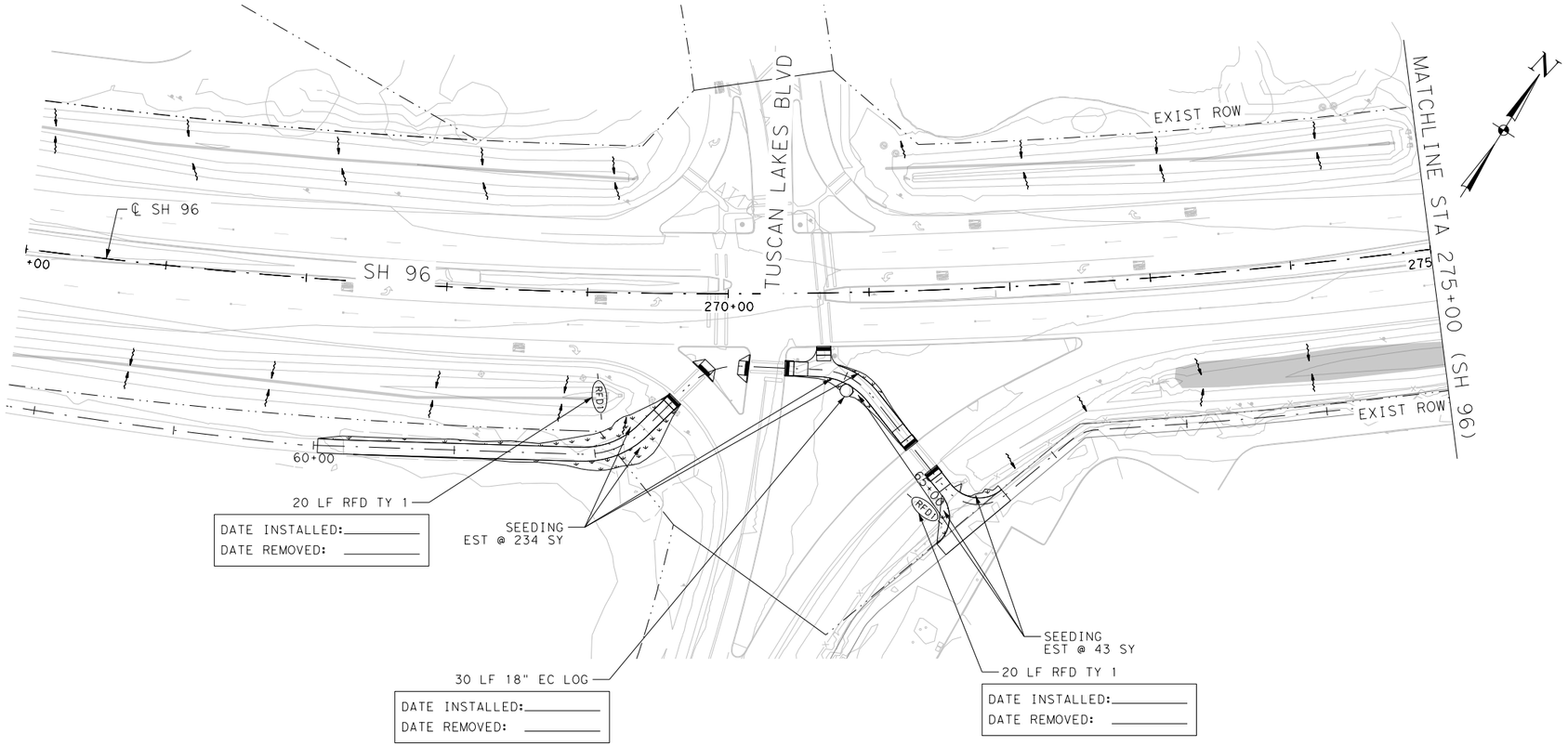

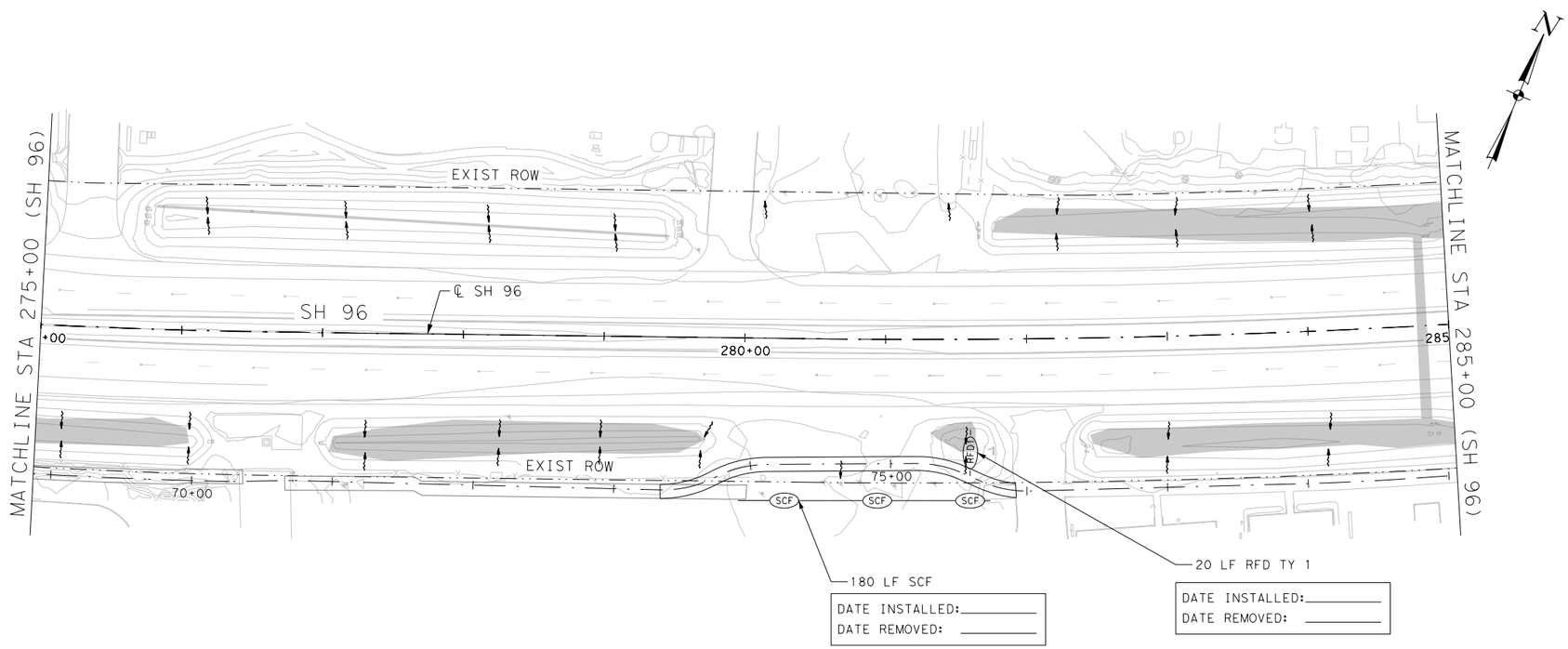

0' 25' 50' 100'

LEGEND:

- SCF — TEMPORARY SEDIMENT CONTROL FENCE
- RFD# — ROCK FILTER DAM
- EROSION CONTROL LOG
- SEEDING
- WETLANDS
- DRAINAGE FLOW ARROW

NOTES:

1. REFER TO SW3P STANDARD SHEETS FOR DETAILS.
2. INSTALLED MEASURES SHALL REMAIN IN PLACE AND SHALL BE MAINTAINED THROUGHOUT DURATION OF PROJECT OR AS DIRECTED BY THE ENGINEER.
3. SW3P MEASURES SHOWN ARE MINIMUM REQUIREMENTS BASED UPON PROJECT DESIGN. INSTALLATION OF SW3P MEASURES WILL BE AS SHOWN AND MODIFIED TO ACCOMMODATE ACTUAL FIELD CONDITIONS.
4. CONSTRUCTION EXITS TO BE LOCATED IN THE FIELD AND APPROVED BY THE ENGINEER. THE SIZE OF THE CONSTRUCTION EXIT WILL BE 78 SY (50'X14'). REFER TO STANDARD EC(3) FOR DETAILS.
5. CONTRACTOR MUST GET AN APPROVED SEEDING MIX FOR USE IN WETLAND AREAS.

NO.	DATE	REVISION	APPROVED

STATE OF TEXAS
GREGORIO GARCIA
101077
LICENSED
PROFESSIONAL ENGINEER

07/26/2023

Texas Department of Transportation
©2023

SANCHEZ-SALAZAR & ASSOCIATES, LLC
12770 Cimarron Path, Ste. 118
San Antonio, TX 78249
Phone: (210) 314-5458
TBPELS Registration No. 15685

SH 96, FM 270
SW3P
LAYOUT
STA 265+00 TO STA 285+00

SHEET 9 OF 16

DRAWN	FED.RD. DIV.NO.	FEDERAL AID PROJECT NO.		HIGHWAY NO.
RO	06			FM 270, ETC
DESIGNED	STATE	DIST.	COUNTY	SHEET NO.
RO	TEXAS	HOUSTON	GALVESTON	337
CHECKED	CONT.	SECT.	JOB	
GG	0912	73	215	
APPROVED				
GG				

PLOTDRIVER: cpypdf_ANSIB.pltcfg PENTABLE: LCBF.tbl
DATE: 7/26/2023 9:13:05 AM USER: rortiz
FILE: c:\bms\pwe101-01\rene.ortiz\dms22652\LCBF_SW3P_09.dgn

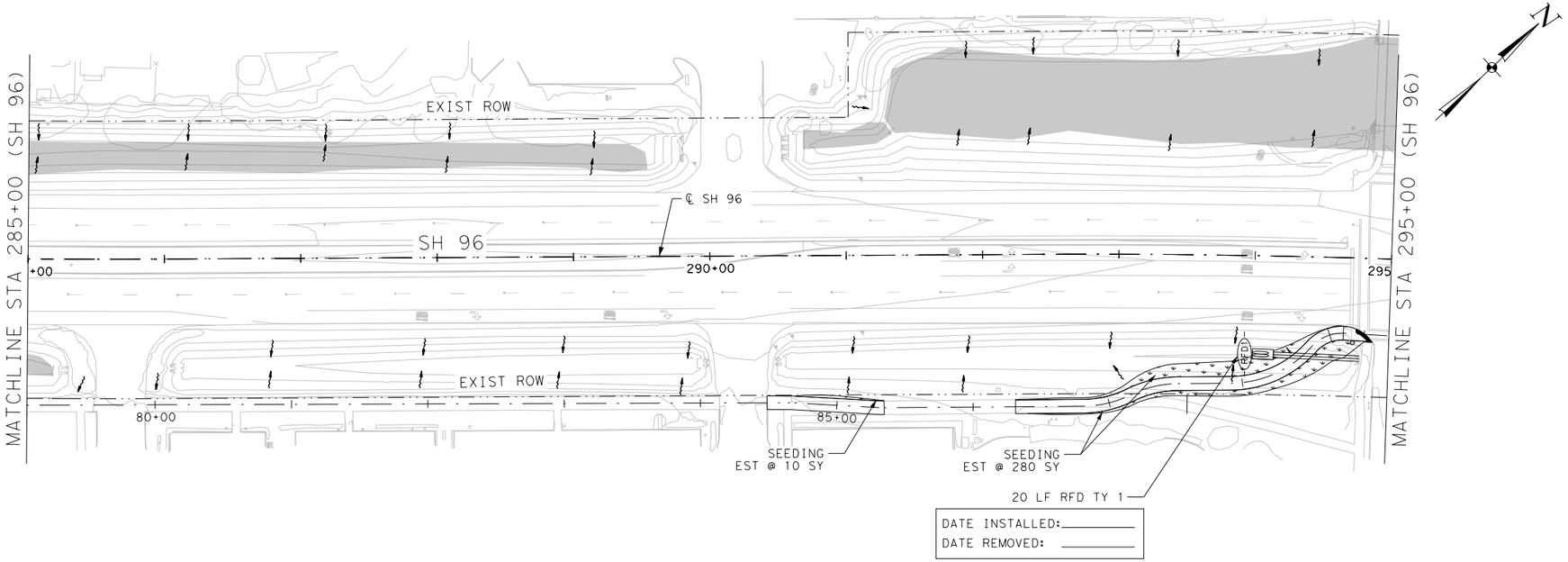

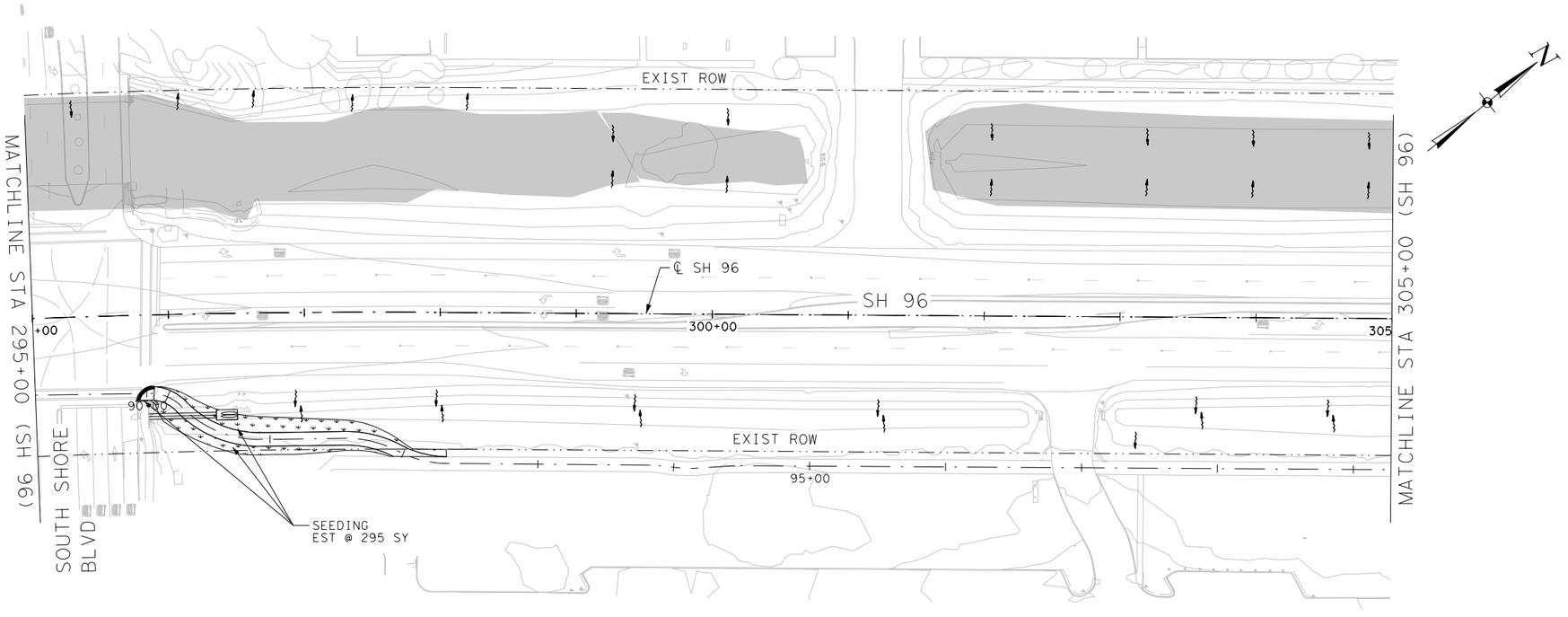

0' 25' 50' 100'

LEGEND:

- SCF — TEMPORARY SEDIMENT CONTROL FENCE
- RFD# — ROCK FILTER DAM
- EROSION CONTROL LOG
- SEEDING
- WETLANDS
- DRAINAGE FLOW ARROW

NOTES:

1. REFER TO SW3P STANDARD SHEETS FOR DETAILS.
2. INSTALLED MEASURES SHALL REMAIN IN PLACE AND SHALL BE MAINTAINED THROUGHOUT DURATION OF PROJECT OR AS DIRECTED BY THE ENGINEER.
3. SW3P MEASURES SHOWN ARE MINIMUM REQUIREMENTS BASED UPON PROJECT DESIGN. INSTALLATION OF SW3P MEASURES WILL BE AS SHOWN AND MODIFIED TO ACCOMMODATE ACTUAL FIELD CONDITIONS.
4. CONSTRUCTION EXITS TO BE LOCATED IN THE FIELD AND APPROVED BY THE ENGINEER. THE SIZE OF THE CONSTRUCTION EXIT WILL BE 78 SY (50'X14'). REFER TO STANDARD EC(3) FOR DETAILS.
5. CONTRACTOR MUST GET AN APPROVED SEEDING MIX FOR USE IN WETLAND AREAS.

NO.	DATE	REVISION	APPROVED

STATE OF TEXAS
GREGORIO GARCIA
101077
LICENSED
PROFESSIONAL ENGINEER

07/26/2023

Texas Department of Transportation
©2023

SANCHEZ-SALAZAR & ASSOCIATES, LLC
12770 Cimarron Path, Ste. 118
San Antonio, TX 78249
Phone: (210) 314-5458
TBPELS Registration No. 15685

SH 96, FM 270
SW3P
LAYOUT

STA 285+00 TO STA 305+00

SHEET 10 OF 16

DRAWN	FED.RD. DIV.NO.	FEDERAL AID PROJECT NO.		HIGHWAY NO.
RO	06			FM 270, ETC
DESIGNED	STATE	DIST.	COUNTY	SHEET NO.
RO	TEXAS	HOUSTON	GALVESTON	338
CHECKED	CONT.	SECT.	JOB	
GG	0912	73	215	
APPROVED				
GG				

PLOTDRIVER: cpypdf_ANSIB.pltcfg PENTABLE: LCBF.tbl
DATE: 7/26/2023 9:13:11 AM USER: rortiz
FILE: c:\bms\pwe101-01\rene.ortiz\dms22652\LCBF_SW3P_10.dgn

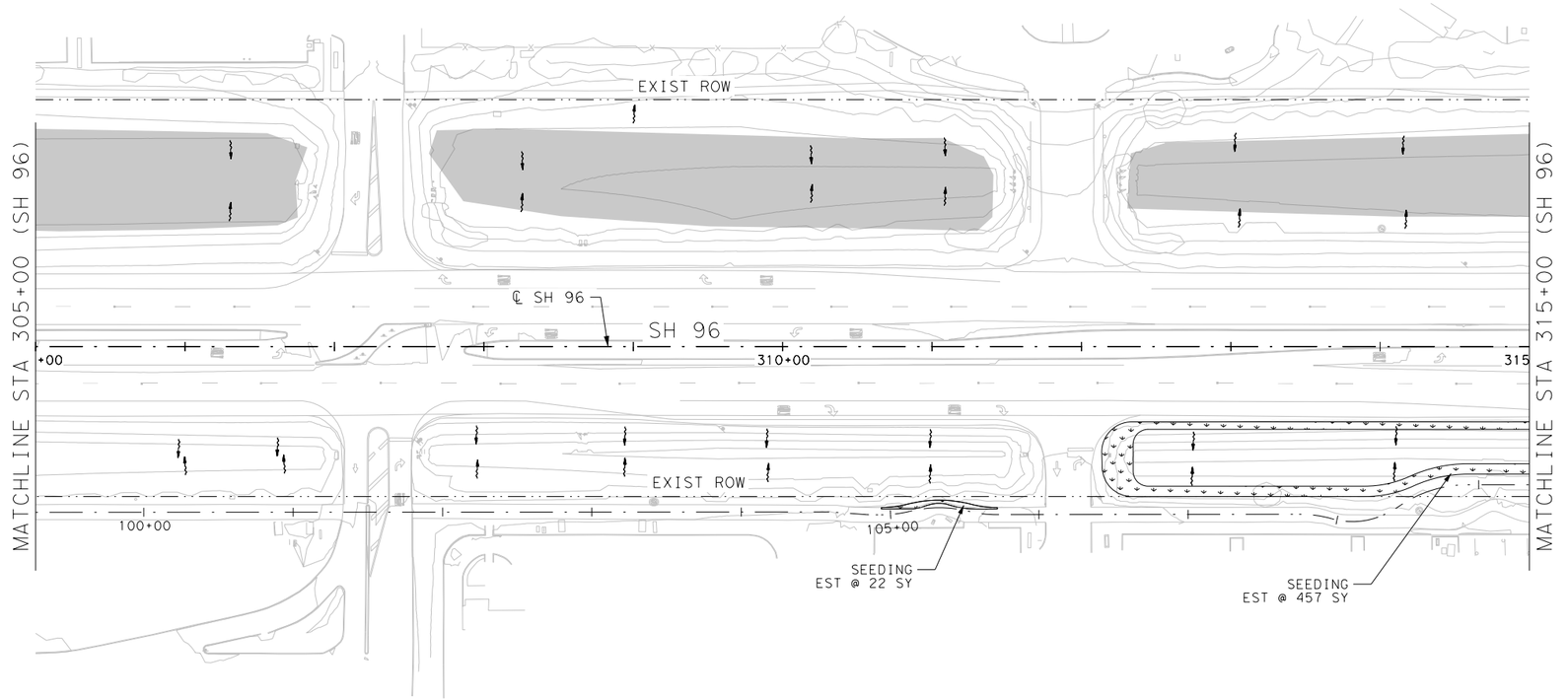

0′ 25′ 50′ 100′

LEGEND:

- SCF — TEMPORARY SEDIMENT CONTROL FENCE
- RFD# — ROCK FILTER DAM
- EROSION CONTROL LOG
- SEEDING
- WETLANDS
- DRAINAGE FLOW ARROW

NOTES:

1. REFER TO SW3P STANDARD SHEETS FOR DETAILS.
2. INSTALLED MEASURES SHALL REMAIN IN PLACE AND SHALL BE MAINTAINED THROUGHOUT DURATION OF PROJECT OR AS DIRECTED BY THE ENGINEER.
3. SW3P MEASURES SHOWN ARE MINIMUM REQUIREMENTS BASED UPON PROJECT DESIGN. INSTALLATION OF SW3P MEASURES WILL BE AS SHOWN AND MODIFIED TO ACCOMMODATE ACTUAL FIELD CONDITIONS.
4. CONSTRUCTION EXITS TO BE LOCATED IN THE FIELD AND APPROVED BY THE ENGINEER. THE SIZE OF THE CONSTRUCTION EXIT WILL BE 78 SY (50′X14′). REFER TO STANDARD EC(3) FOR DETAILS.
5. CONTRACTOR MUST GET AN APPROVED SEEDING MIX FOR USE IN WETLAND AREAS.

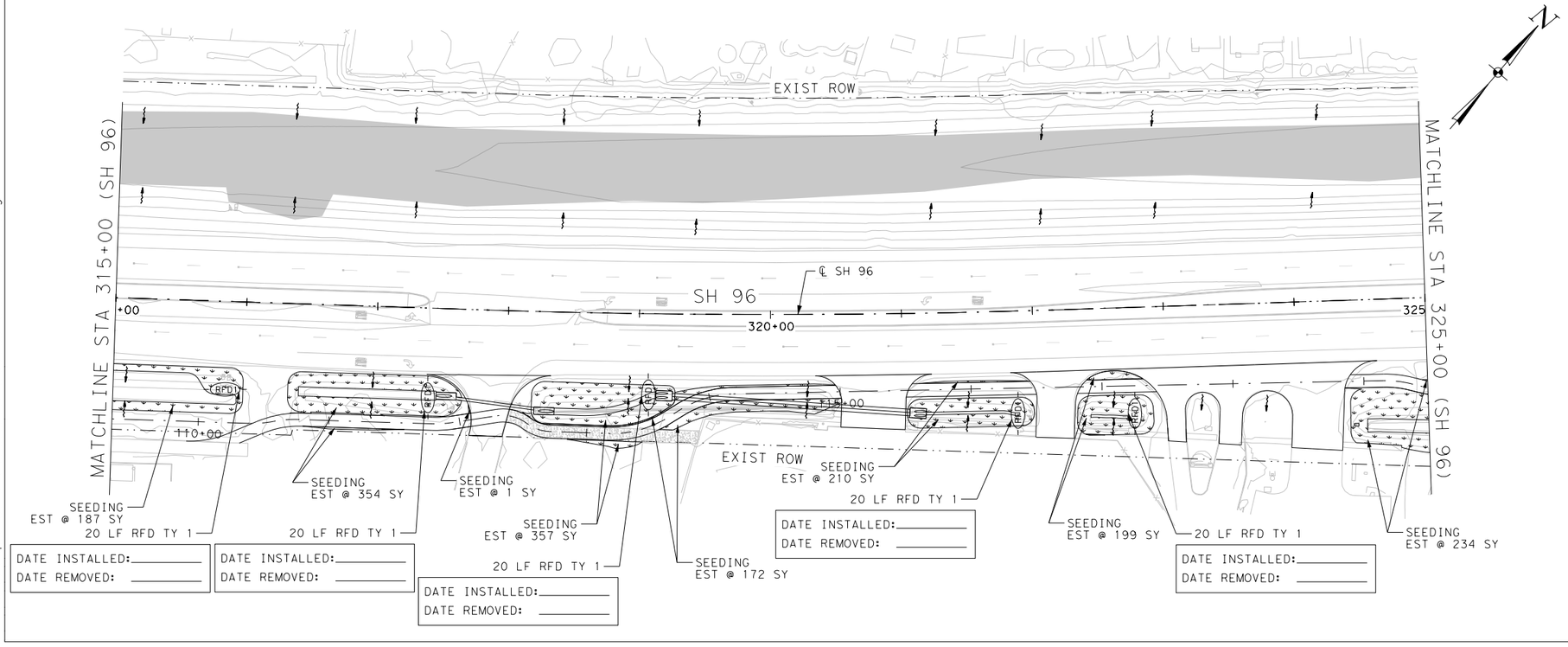

DATE INSTALLED:_____
DATE REMOVED: _____

DATE INSTALLED:_____
DATE REMOVED: _____

DATE INSTALLED:_____
DATE REMOVED: _____

DATE INSTALLED:_____
DATE REMOVED: _____

DATE INSTALLED:_____
DATE REMOVED: _____

NO.	DATE	REVISION	APPROVED

STATE OF TEXAS
GREGORIO GARCIA
101077
LICENSED
PROFESSIONAL ENGINEER

07/26/2023

Texas Department of Transportation
©2023

SANCHEZ-SALAZAR & ASSOCIATES, LLC
12770 Cimarron Path, Ste. 118
San Antonio, TX 78249
Phone: (210) 314-5458
TBPELS Registration No. 15685

SH 96, FM 270
SW3P
LAYOUT

STA 305+00 TO STA 325+00

SHEET 11 OF 16

DRAWN	FED.RD. DIV.NO.	FEDERAL AID PROJECT NO.		HIGHWAY NO.
RO	06			FM 270, ETC
DESIGNED	STATE	DIST.	COUNTY	SHEET NO.
RO	TEXAS	HOUSTON	GALVESTON	339
CHECKED	CONT.	SECT.	JOB	
GG	0912	73	215	
APPROVED				
GG				

PLOTDRIVER: cpypdf_ANSIB.pltcfg PENTABLE: LCBF.tbl
DATE: 7/26/2023 9:13:17 AM USER: rortiz
FILE: c:\bms\pwe101-01\rene.ortiz\dms22652\LCBF_SW3P_11.dgn

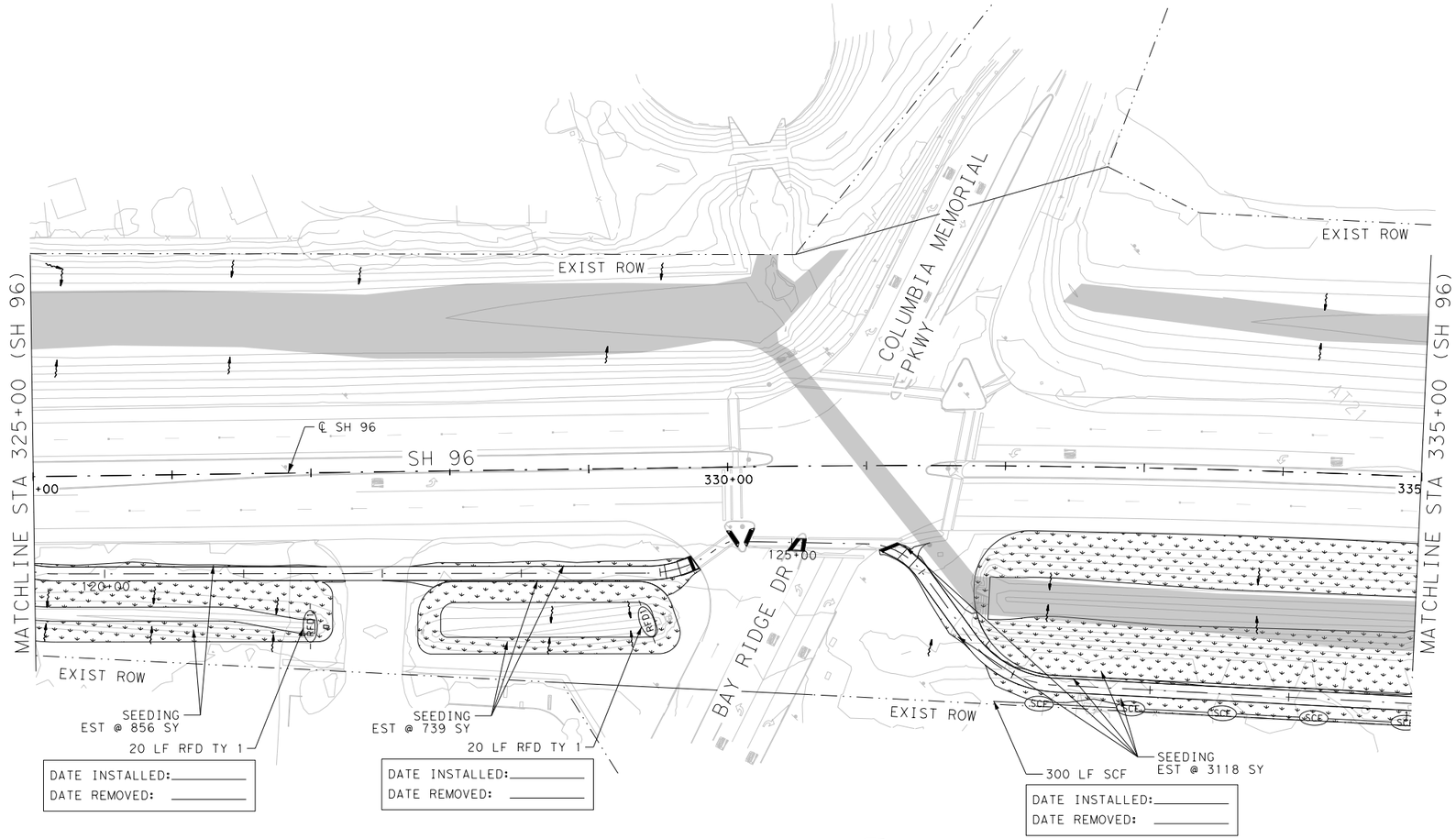

0' 25' 50' 100'

LEGEND:

- SCF — TEMPORARY SEDIMENT CONTROL FENCE
- RFD# — ROCK FILTER DAM
- EROSION CONTROL LOG
- SEEDING
- WETLANDS
- DRAINAGE FLOW ARROW

NOTES:

1. REFER TO SW3P STANDARD SHEETS FOR DETAILS.
2. INSTALLED MEASURES SHALL REMAIN IN PLACE AND SHALL BE MAINTAINED THROUGHOUT DURATION OF PROJECT OR AS DIRECTED BY THE ENGINEER.
3. SW3P MEASURES SHOWN ARE MINIMUM REQUIREMENTS BASED UPON PROJECT DESIGN. INSTALLATION OF SW3P MEASURES WILL BE AS SHOWN AND MODIFIED TO ACCOMMODATE ACTUAL FIELD CONDITIONS.
4. CONSTRUCTION EXITS TO BE LOCATED IN THE FIELD AND APPROVED BY THE ENGINEER. THE SIZE OF THE CONSTRUCTION EXIT WILL BE 78 SY (50'X14'). REFER TO STANDARD EC(3) FOR DETAILS.
5. CONTRACTOR MUST GET AN APPROVED SEEDING MIX FOR USE IN WETLAND AREAS.

NO.	DATE	REVISION	APPROVED

STATE OF TEXAS
GREGORIO GARCIA
10107
LICENSED PROFESSIONAL ENGINEER

07/26/2023

Texas Department of Transportation
©2023

SANCHEZ-SALAZAR & ASSOCIATES, LLC
12770 Cimarron Path, Ste. 118
San Antonio, TX 78249
Phone: (210) 314-5458
TBPELS Registration No. 15685

SH 96, FM 270
SW3P
LAYOUT

STA 325+00 TO STA 345+00

SHEET 12 OF 16

DRAWN	FED.RD. DIV.NO.	FEDERAL AID PROJECT NO.		HIGHWAY NO.
RO	06			FM 270, ETC
DESIGNED	STATE	DIST.	COUNTY	SHEET NO.
RO	TEXAS	HOUSTON	GALVESTON	340
CHECKED	CONT.	SECT.	JOB	
GG	0912	73	215	
APPROVED				
GG				

PLOTDRIVER: cpypdf_ANSIB.pltcfg PENTABLE: LCBF.tbl
DATE: 7/26/2023 9:13:24 AM USER: rortiz
FILE: c:\bms\pwe101-01\rene.ortiz\dms22652\LCBF_SW3P_12.dgn

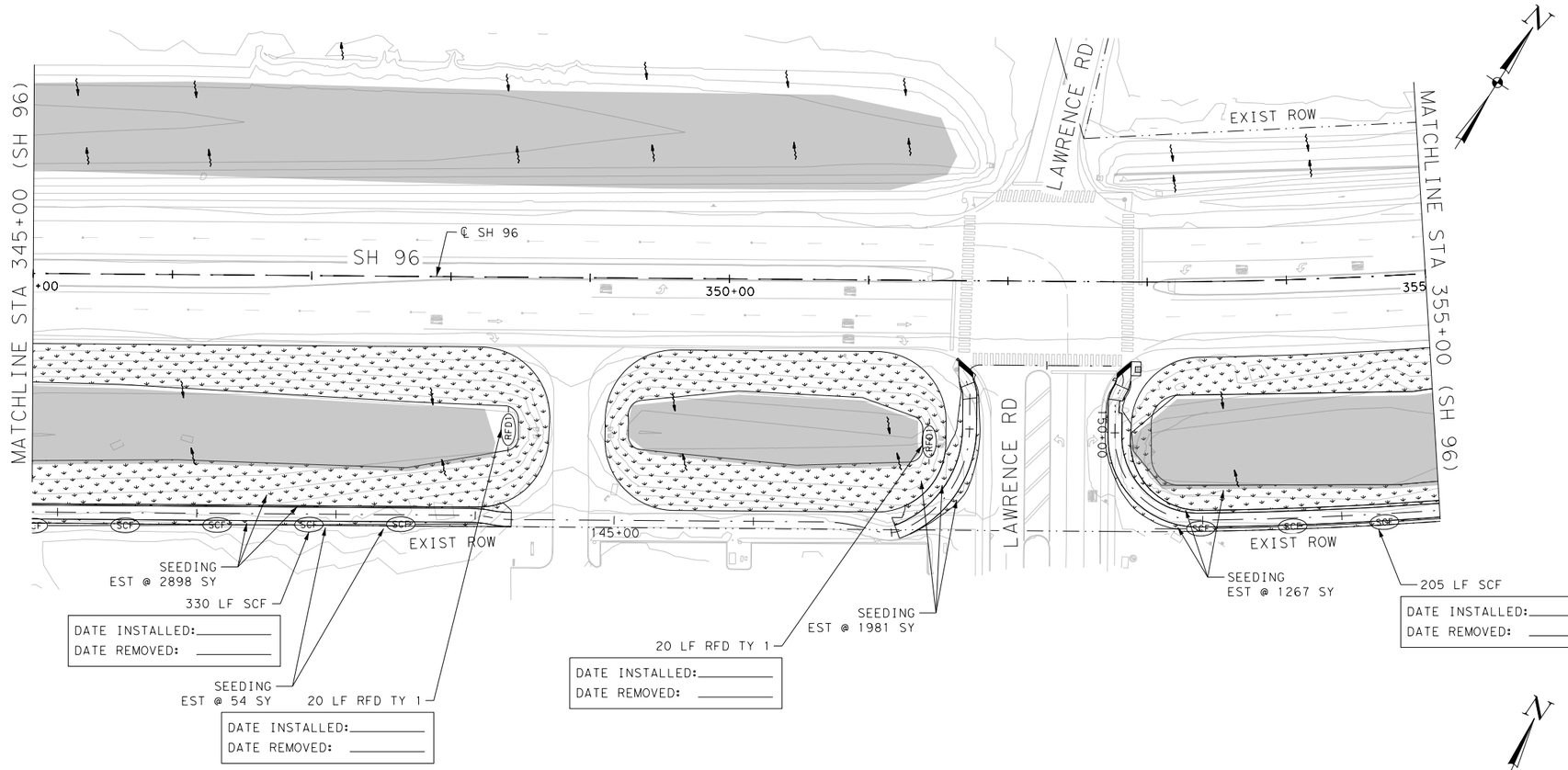

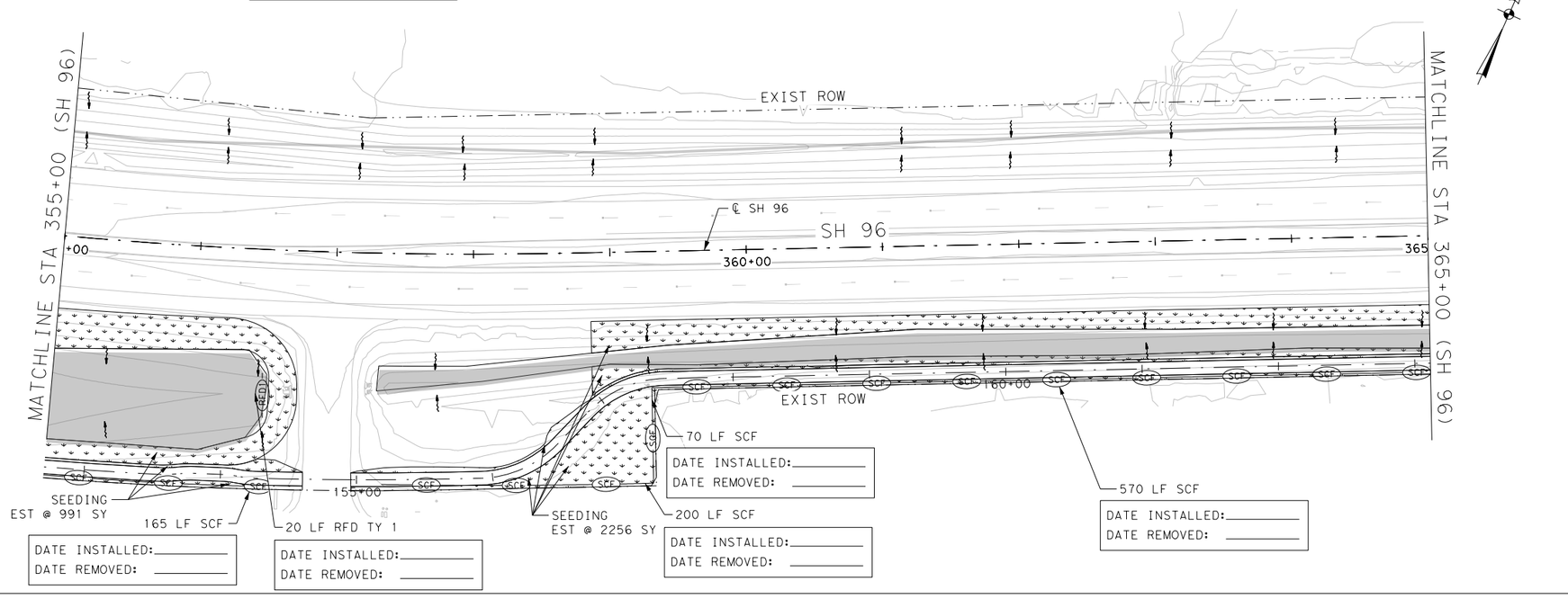

0' 25' 50' 100'

LEGEND:

- SCF — TEMPORARY SEDIMENT CONTROL FENCE
- RFD# — ROCK FILTER DAM
- EROSION CONTROL LOG
- SEEDING
- WETLANDS
- DRAINAGE FLOW ARROW

NOTES:

1. REFER TO SW3P STANDARD SHEETS FOR DETAILS.
2. INSTALLED MEASURES SHALL REMAIN IN PLACE AND SHALL BE MAINTAINED THROUGHOUT DURATION OF PROJECT OR AS DIRECTED BY THE ENGINEER.
3. SW3P MEASURES SHOWN ARE MINIMUM REQUIREMENTS BASED UPON PROJECT DESIGN. INSTALLATION OF SW3P MEASURES WILL BE AS SHOWN AND MODIFIED TO ACCOMMODATE ACTUAL FIELD CONDITIONS.
4. CONSTRUCTION EXITS TO BE LOCATED IN THE FIELD AND APPROVED BY THE ENGINEER. THE SIZE OF THE CONSTRUCTION EXIT WILL BE 78 SY (50'X14'). REFER TO STANDARD EC(3) FOR DETAILS.
5. CONTRACTOR MUST GET AN APPROVED SEEDING MIX FOR USE IN WETLAND AREAS.

NO.	DATE	REVISION	APPROVED

STATE OF TEXAS
GREGORIO GARCIA
101077
LICENSED PROFESSIONAL ENGINEER

07/26/2023

Texas Department of Transportation
©2023

SANCHEZ-SALAZAR & ASSOCIATES, LLC
12770 Cimarron Path, Ste. 118
San Antonio, TX 78249
Phone: (210) 314-5458
TBPELS Registration No. 15685

SH 96, FM 270
SW3P
LAYOUT

STA 345+00 TO STA 365+00

SHEET 13 OF 16

DRAWN	FED.RD. DIV.NO.	FEDERAL AID PROJECT NO.		HIGHWAY NO.
RO	06			FM 270, ETC
DESIGNED	STATE	DIST.	COUNTY	SHEET NO.
RO	TEXAS	HOUSTON	GALVESTON	341
CHECKED	CONT.	SECT.	JOB	
GG	0912	73	215	
APPROVED				
GG				

PLOTDRIVER: cpypdf_ANSIB.pltcfg PENTABLE: LCBF.tbl
DATE: 7/26/2023 9:13:31 AM USER: rortiz
FILE: c:\bms\pwe101-01\rene.ortiz\dms22652\LCBF_SW3P_13.dgn

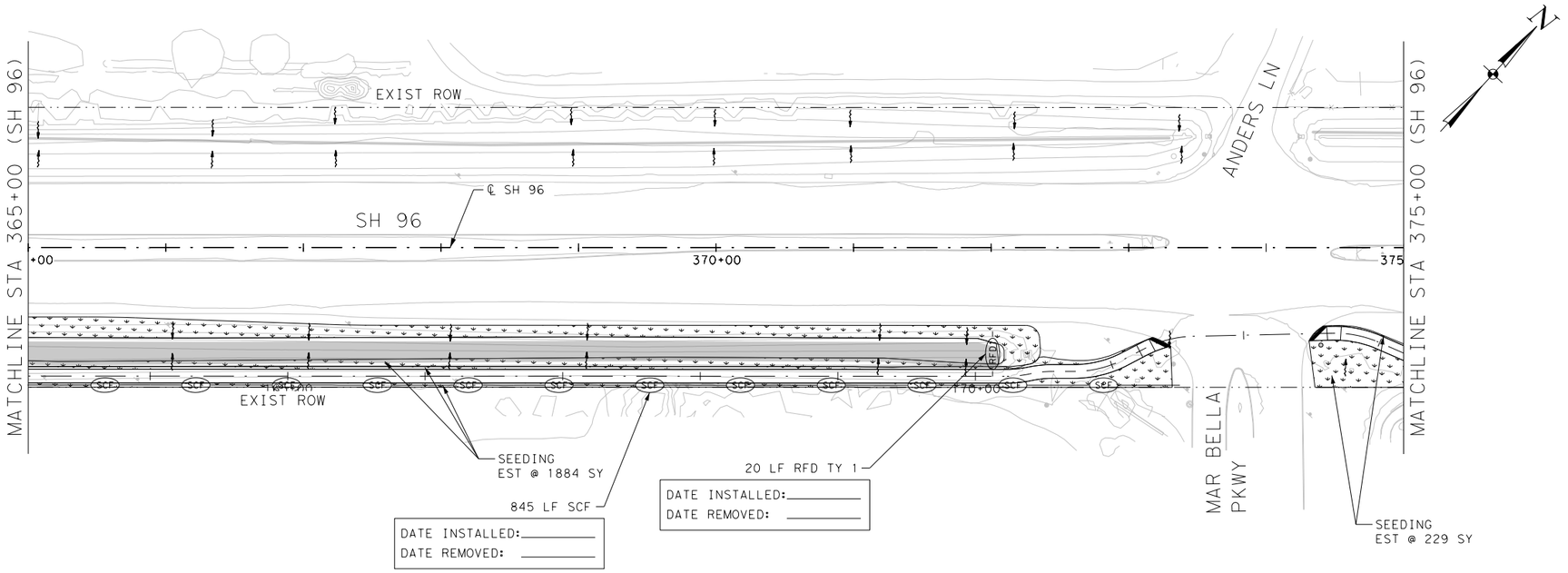

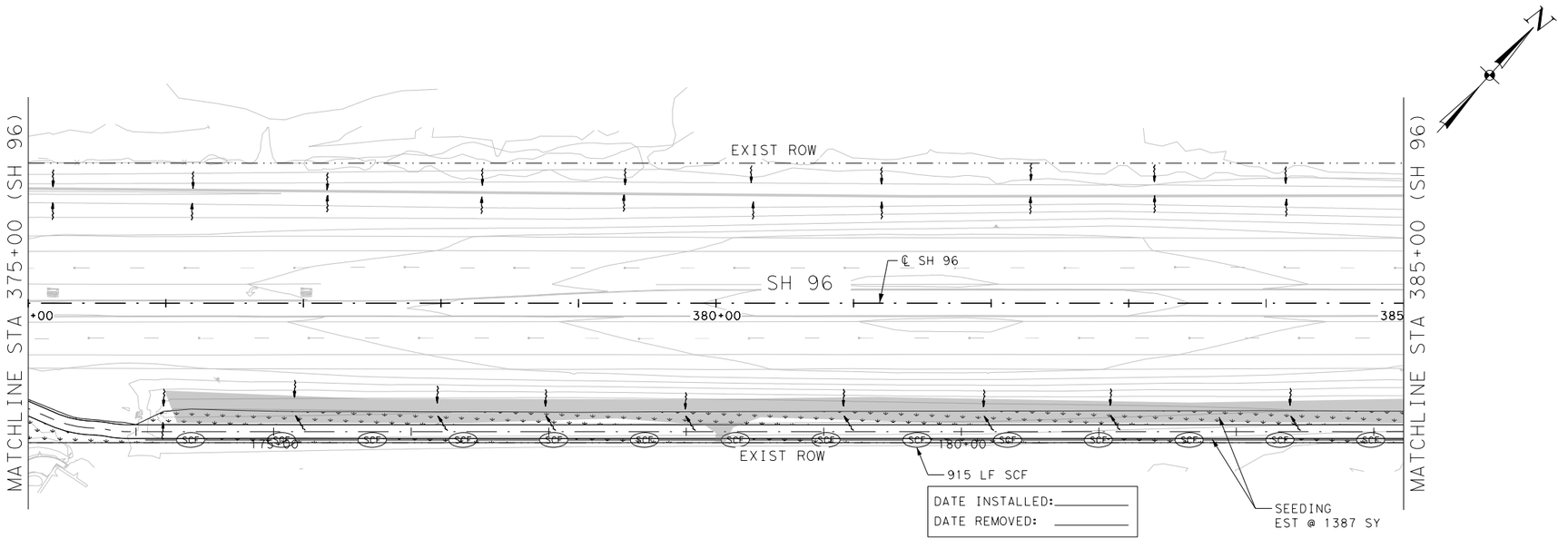

0' 25' 50' 100'

LEGEND:

- SCF — TEMPORARY SEDIMENT CONTROL FENCE
- RFD — ROCK FILTER DAM
- EROSION CONTROL LOG
- SEEDING
- WETLANDS
- DRAINAGE FLOW ARROW

NOTES:

1. REFER TO SW3P STANDARD SHEETS FOR DETAILS.
2. INSTALLED MEASURES SHALL REMAIN IN PLACE AND SHALL BE MAINTAINED THROUGHOUT DURATION OF PROJECT OR AS DIRECTED BY THE ENGINEER.
3. SW3P MEASURES SHOWN ARE MINIMUM REQUIREMENTS BASED UPON PROJECT DESIGN. INSTALLATION OF SW3P MEASURES WILL BE AS SHOWN AND MODIFIED TO ACCOMMODATE ACTUAL FIELD CONDITIONS.
4. CONSTRUCTION EXITS TO BE LOCATED IN THE FIELD AND APPROVED BY THE ENGINEER. THE SIZE OF THE CONSTRUCTION EXIT WILL BE 78 SY (50'X14'). REFER TO STANDARD EC(3) FOR DETAILS.
5. CONTRACTOR MUST GET AN APPROVED SEEDING MIX FOR USE IN WETLAND AREAS.

NO.	DATE	REVISION	APPROVED

STATE OF TEXAS
GREGORIO GARCIA
101077
LICENSED
PROFESSIONAL ENGINEER

07/26/2023

Texas Department of Transportation
©2023

SANCHEZ-SALAZAR & ASSOCIATES, LLC
12770 Cimarron Path, Ste. 118
San Antonio, TX 78249
Phone: (210) 314-5458
TBPELS Registration No. 15685

SH 96, FM 270
SW3P
LAYOUT

STA 365+00 TO STA 385+00

DRAWN	FED.RD. DIV.NO.	FEDERAL AID PROJECT NO.		HIGHWAY NO.
RO	06			FM 270, ETC
DESIGNED	STATE	DIST.	COUNTY	SHEET NO.
RO	TEXAS	HOUSTON	GALVESTON	342
CHECKED	CONT.	SECT.	JOB	
GG	0912	73	215	
APPROVED				
GG				

DATE:7/26/2023 9:13:38 AM USER:rortiz
FILE:c:\bms\pwe101-01\rene.ortiz\dms22652\LCBF_SW3P_14.dgn
PLOTDRIVER: cpypdf_ANSIB.pltcfg PENTABLE:LCBF.tbl

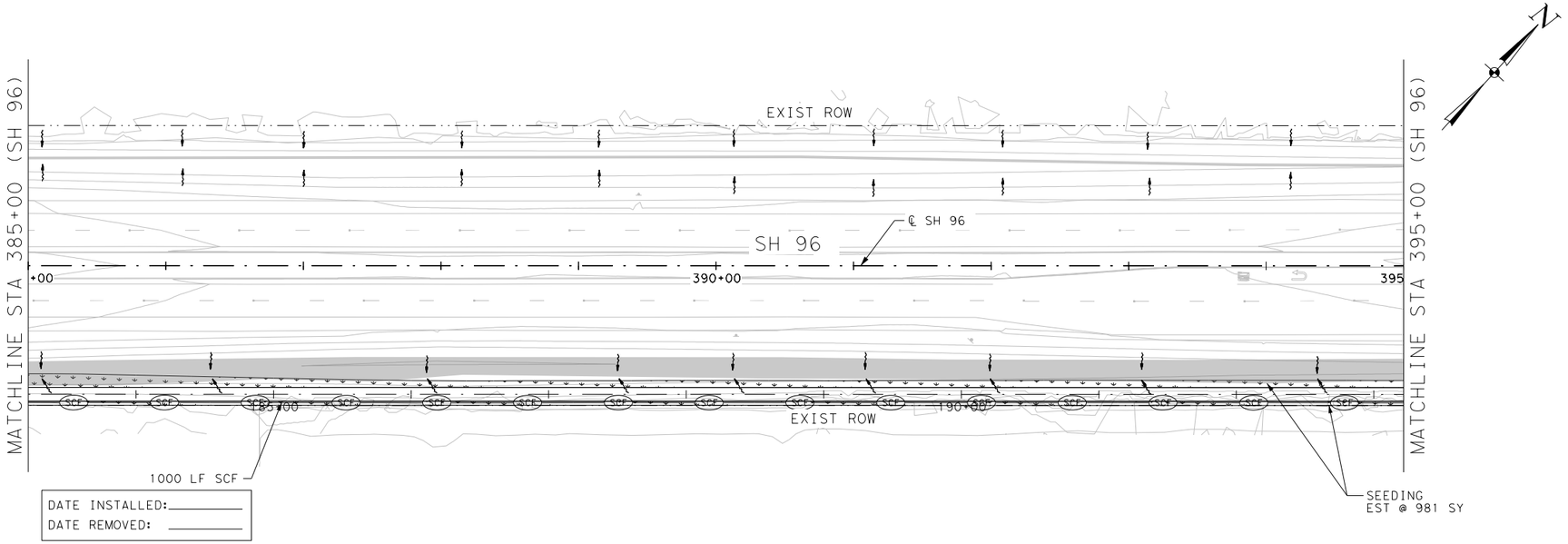

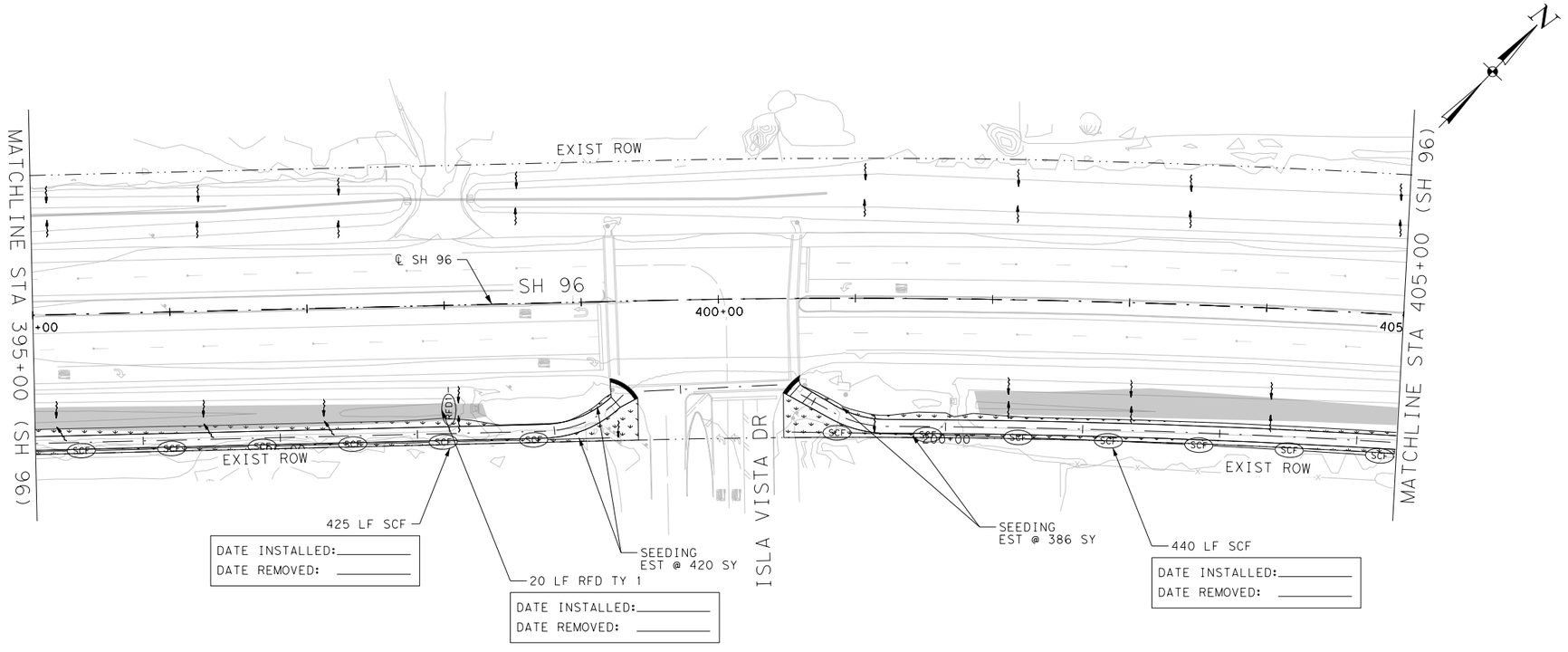

0' 25' 50' 100'

LEGEND:

- SCF — TEMPORARY SEDIMENT CONTROL FENCE
- RFD# — ROCK FILTER DAM
- EROSION CONTROL LOG
- SEEDING
- WETLANDS
- DRAINAGE FLOW ARROW

NOTES:

1. REFER TO SW3P STANDARD SHEETS FOR DETAILS.
2. INSTALLED MEASURES SHALL REMAIN IN PLACE AND SHALL BE MAINTAINED THROUGHOUT DURATION OF PROJECT OR AS DIRECTED BY THE ENGINEER.
3. SW3P MEASURES SHOWN ARE MINIMUM REQUIREMENTS BASED UPON PROJECT DESIGN. INSTALLATION OF SW3P MEASURES WILL BE AS SHOWN AND MODIFIED TO ACCOMMODATE ACTUAL FIELD CONDITIONS.
4. CONSTRUCTION EXITS TO BE LOCATED IN THE FIELD AND APPROVED BY THE ENGINEER. THE SIZE OF THE CONSTRUCTION EXIT WILL BE 78 SY (50'X14'). REFER TO STANDARD EC(3) FOR DETAILS.
5. CONTRACTOR MUST GET AN APPROVED SEEDING MIX FOR USE IN WETLAND AREAS.

NO.	DATE	REVISION	APPROVED

GREGORIO GARCIA
101077
LICENSED
PROFESSIONAL ENGINEER
STATE OF TEXAS

07/26/2023

©2023

Texas Department of Transportation

SANCHEZ-SALAZAR & ASSOCIATES, LLC
12770 Cimarron Path, Ste. 118
San Antonio, TX 78249
Phone: (210) 314-5458
TBPELS Registration No. 15685

SH 96, FM 270
SW3P
LAYOUT

STA 385+00 TO STA 405+00

SHEET 15 OF 16

DRAWN	FED.RD. DIV.NO.	FEDERAL AID PROJECT NO.		HIGHWAY NO.
RO	06			FM 270, ETC
DESIGNED	STATE	DIST.	COUNTY	SHEET NO.
RO	TEXAS	HOUSTON	GALVESTON	343
CHECKED	CONT.	SECT.	JOB	
GG	0912	73	215	
APPROVED				
GG				

PLOTDRIVER: cpypdf_ANSIB.pltcfg PENTABLE: LCBF.tbl
DATE: 7/26/2023 9:13:43 AM USER: rortiz
FILE: c:\bms\pwe101-01\rene.ortiz\dms22652\LCBF_SW3P_15.dgn

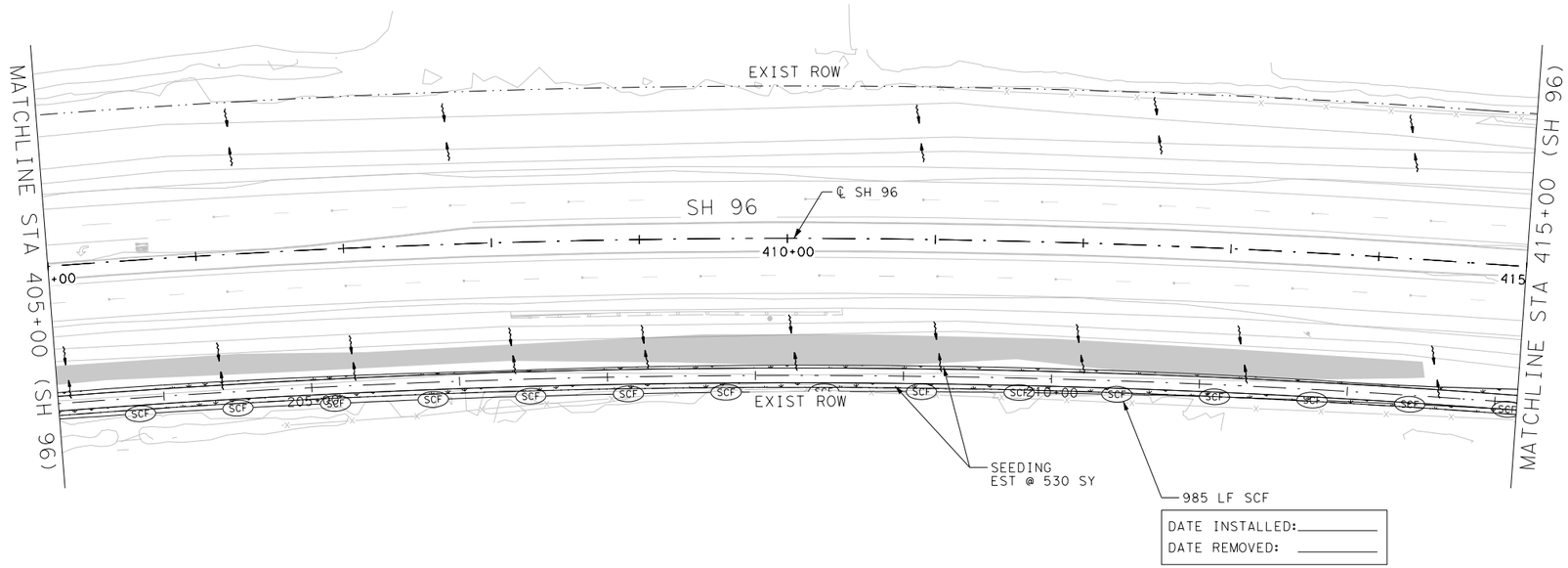

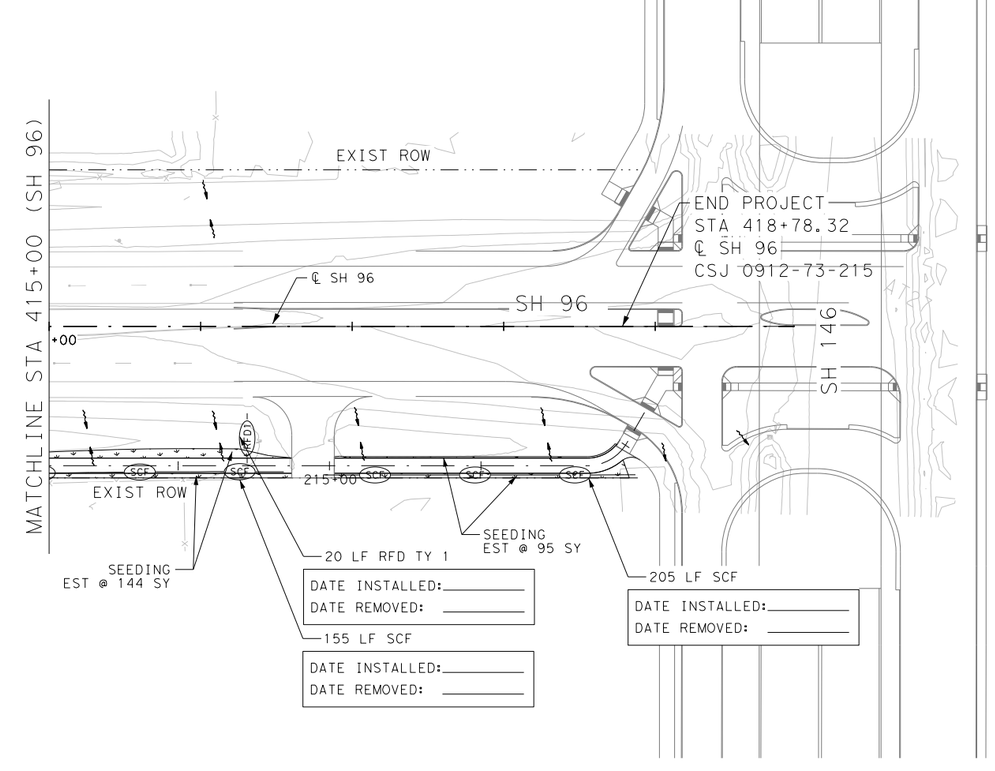

0' 25' 50' 100'

LEGEND:

- SCF — TEMPORARY SEDIMENT CONTROL FENCE
- RFD# — ROCK FILTER DAM
- EROSION CONTROL LOG
- SEEDING
- WETLANDS
- DRAINAGE FLOW ARROW

NOTES:

1. REFER TO SW3P STANDARD SHEETS FOR DETAILS.
2. INSTALLED MEASURES SHALL REMAIN IN PLACE AND SHALL BE MAINTAINED THROUGHOUT DURATION OF PROJECT OR AS DIRECTED BY THE ENGINEER.
3. SW3P MEASURES SHOWN ARE MINIMUM REQUIREMENTS BASED UPON PROJECT DESIGN. INSTALLATION OF SW3P MEASURES WILL BE AS SHOWN AND MODIFIED TO ACCOMMODATE ACTUAL FIELD CONDITIONS.
4. CONSTRUCTION EXITS TO BE LOCATED IN THE FIELD AND APPROVED BY THE ENGINEER. THE SIZE OF THE CONSTRUCTION EXIT WILL BE 78 SY (50'X14'). REFER TO STANDARD EC(3) FOR DETAILS.
5. CONTRACTOR MUST GET AN APPROVED SEEDING MIX FOR USE IN WETLAND AREAS.

NO.	DATE	REVISION	APPROVED

STATE OF TEXAS
GREGORIO GARCIA
101077
LICENSED
PROFESSIONAL ENGINEER

07/26/2023

Texas Department of Transportation
©2023

SANCHEZ-SALAZAR & ASSOCIATES, LLC
12770 Cimarron Path, Ste. 118
San Antonio, TX 78249
Phone: (210) 314-5458
TBPELS Registration No. 15685

SH 96, FM 270
SW3P
LAYOUT

STA 405+00 TO END PROJECT

SHEET 16 OF 16

DRAWN	FED.RD. DIV.NO.	FEDERAL AID PROJECT NO.		HIGHWAY NO.
RO	06			FM 270, ETC
DESIGNED RO	STATE	DIST.	COUNTY	SHEET NO.
CHECKED GG	TEXAS	HOUSTON	GALVESTON	344
APPROVED GG	CONT.	SECT.	JOB	
	0912	73	215	

PLOTDRIVER: cpypdf_ANSIB.pltcfg PENTABLE: LCBF.tbl
DATE: 7/26/2023 9:13:49 AM USER: rortiz
FILE: c:\bms\pwe101-01\rene.ortiz\dms22652\LCBF_SW3P_16.dgn

DISCLAIMER:
The use of this standard is governed by the "Texas Engineering Practice Act". No warranty of any kind is made by TxDOT for any purpose whatsoever. TxDOT assumes no responsibility for the conversion of this standard to other formats or for incorrect results or damages resulting from its use.

DATE
FILE

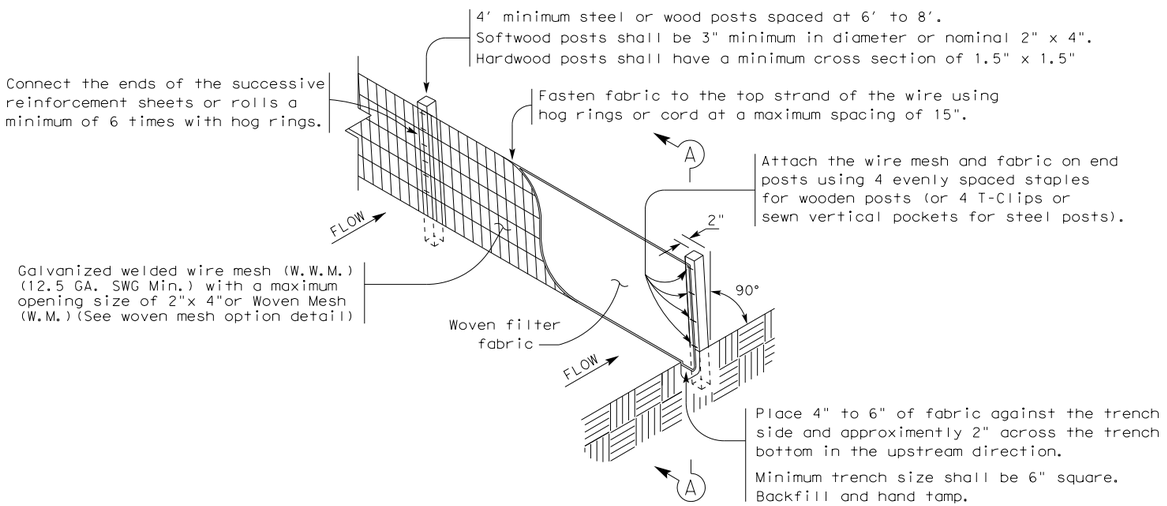

TEMPORARY SEDIMENT CONTROL FENCE

SCF

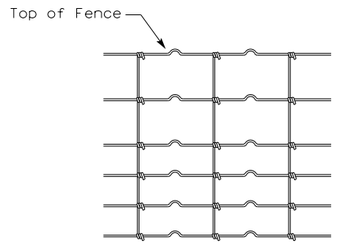

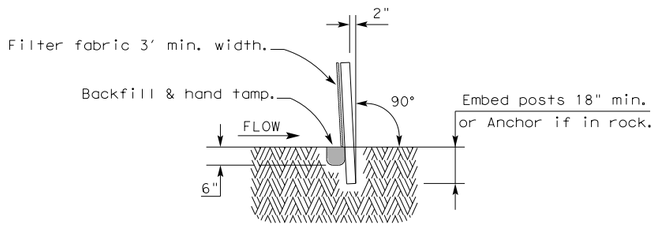

SECTION A-A

HINGE JOINT KNOT WOVEN MESH (OPTION) DETAIL

Galvanized hinge joint knot woven mesh (12.5 GA.SWG Min.) requires a minimum of five horizontal wires spaced at a maximum of 12 inches apart and all vertical wires spaced at a maximum of 12 inches apart.

SEDIMENT CONTROL FENCE USAGE GUIDELINES

A sediment control fence may be constructed near the downstream perimeter of a disturbed area along a contour to intercept sediment from overland runoff. A 2 year storm frequency may be used to calculate the flow rate to be filtered.

Sediment control fence should be sized to filter a maximum flow through rate of 100 GPM/FT^2. Sediment control fence is not recommended to control erosion from a drainage area larger than 2 acres.

LEGEND

Sediment Control Fence

SCF

GENERAL NOTES

1. Vertical tracking is required on projects where soil distributing activities have occurred unless otherwise approved.
2. Perform vertical tracking on slopes to temporarily stabilize soil.
3. Provide equipment with a track undercarriage capable of producing linear soil impressions measuring a minimum of 12" in length by 2" to 4" in width by 1/2" to 2" in depth.
4. Do not exceed 12" between track impressions.
5. Install continous linear track impressions where the minimum 12" length impressions are perpendicular to the slope or direction of water flow.

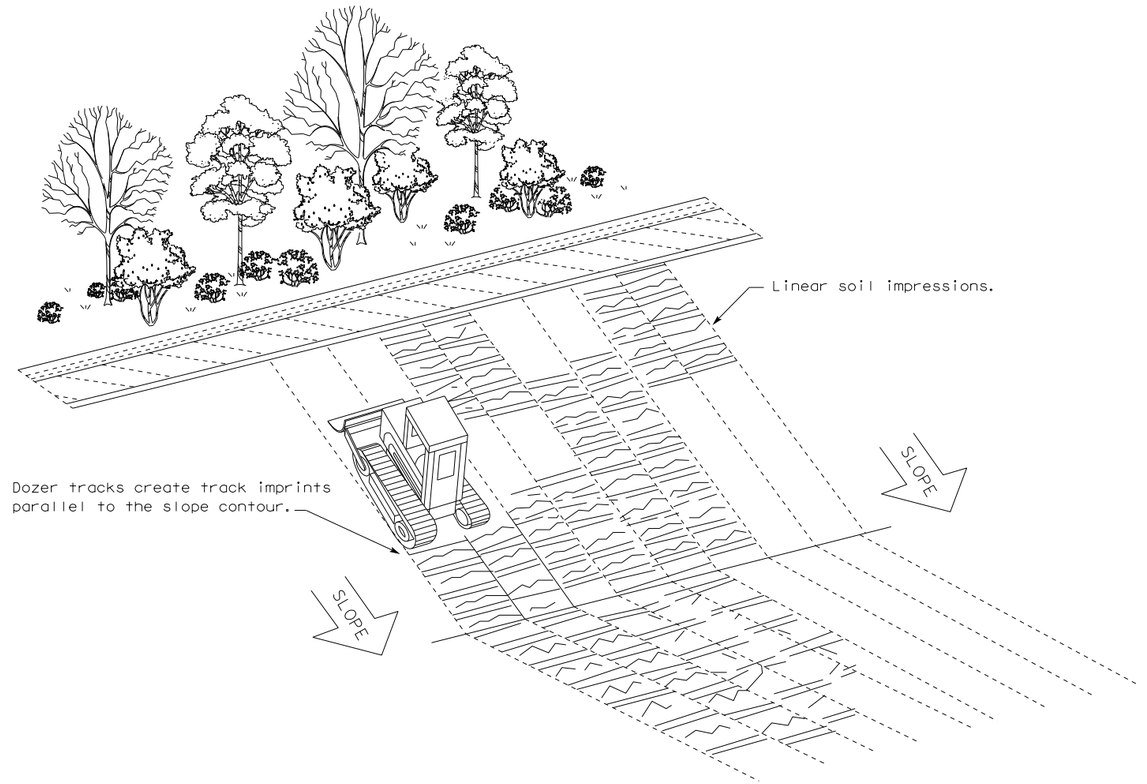

VERTICAL TRACKING

Texas Department of Transportation

Design Division Standard

TEMPORARY EROSION, SEDIMENT AND WATER POLLUTION CONTROL MEASURES

FENCE & VERTICAL TRACKING

EC(1)-16

FILE: ec116	DN: TxDOT		CK: KM		DW: VP	DN/CK: LS
© TxDOT: JULY 2016	CONT	SECT	JOB		HIGHWAY	
REVISIONS	0912	73	215		FM 270 ETC	
	DIST	COUNTY			SHEET NO.	
	HOU	GALVESTON			345	

DISCLAIMER:
The use of this standard is governed by the "Texas Engineering Practice Act". No warranty of any kind is made by TxDOT for any purpose whatsoever. TxDOT assumes no responsibility for the conversion of this standard to other formats or for incorrect results or damages resulting from its use.

DATE:
FILE:

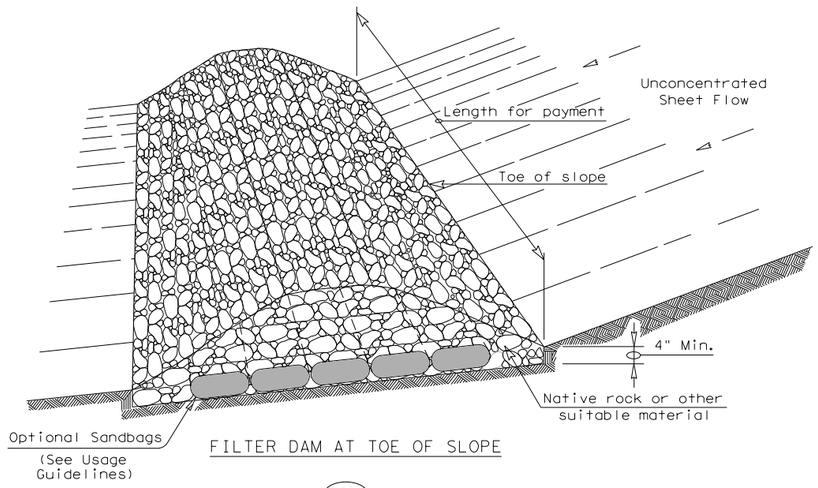

FILTER DAM AT TOE OF SLOPE

RFD1

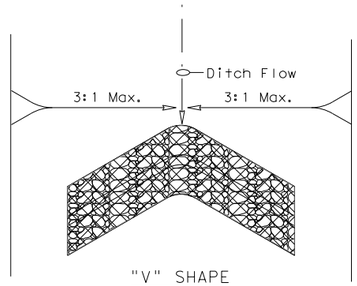

"V" SHAPE
PLAN VIEW

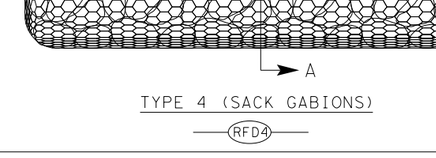

PLAN VIEW

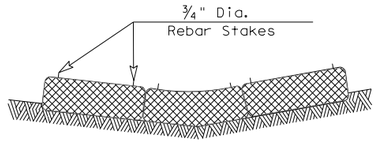

SECTION B-B

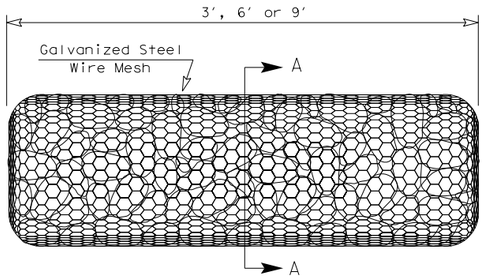

TYPE 4 (SACK GABIONS)

RFD4

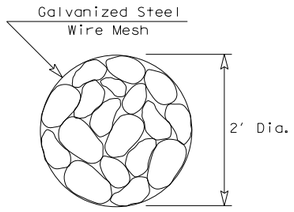

SECTION A-A

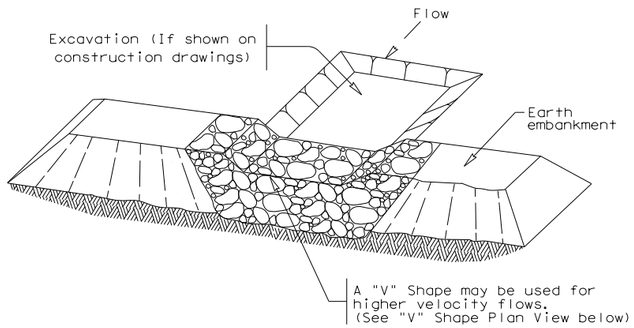

FILTER DAM AT SEDIMENT TRAP

RFD1 OR RFD2

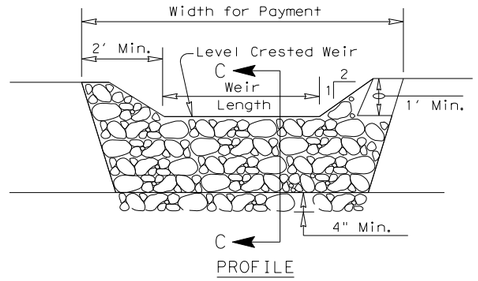

PROFILE

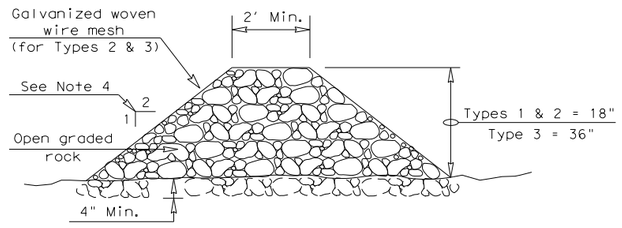

SECTION C-C

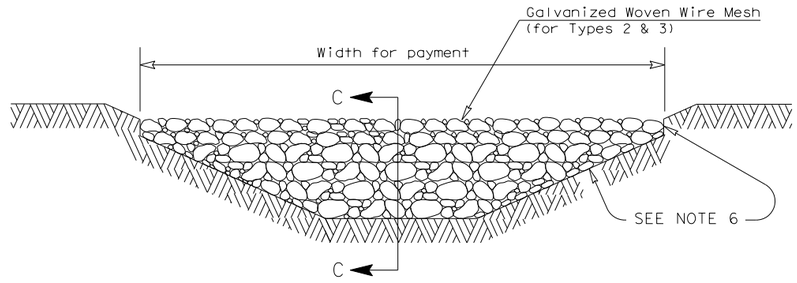

FILTER DAM AT CHANNEL SECTIONS

RFD1 OR RFD2 OR RFD3

ROCK FILTER DAM USAGE GUIDELINES

Rock Filter Dams should be constructed downstream from disturbed areas to intercept sediment from overland runoff and/or concentrated flow. The dams should be sized to filter a maximum flow through rate of 60 GPM/FT^2 of cross sectional area. A 2 year storm frequency may be used to calculate the flow rate.

Type 1 (18" high with no wire mesh) (3" to 6" aggregate): Type 1 may be used at the toe of slopes, around inlets, in small ditches, and at dike or swale outlets. This type of dam is recommended to control erosion from a drainage area of 5 acres or less. Type 1 may not be used in concentrated high velocity flows (approximently 8 Ft/Sec or more) in which aggregate wash out may occur. Sandbags may be used at the embedded foundation (4" deep min.) for better filtering efficiency of low flows if called for on the plans or directed by the Engineer.

Type 2 (18" high with wire mesh) (3" to 6" aggregate): Type 2 may be used in ditches and at dike or swale outlets.

Type 3 (36" high with wire mesh) (4" to 8" aggregate): Type 3 may be used in stream flow and should be secured to the stream bed.

Type 4 (Sack gabions) (3" to 6" aggregate): Type 4 May be used in ditches and smaller channels to form an erosion control dam.

Type 5: Provide rock filter dams as shown on plans.

GENERAL NOTES

1. If shown on the plans or directed by the Engineer, filter dams should be placed near the toe of slopes where erosion is anticipated, upstream and/or downstream at drainage structures, and in roadway ditches and channels to collect sediment.
2. Materials (aggregate, wire mesh, sandbags, etc.) shall be as indicated by the specification for "Rock Filter Dams for Erosion and Sedimentation Control".
3. The rock filter dam dimensions shall be as indicated on the SW3P plans.
4. Side slopes should be 2:1 or flatter. Dams within the safety zone shall have sideslopes of 6:1 or flatter.
5. Maintain a minimum of 1' between top of rock filter dam weir and top of embankment for filter dams at sediment traps.
6. Filter dams should be embedded a minimum of 4" into existing ground.
7. The sediment trap for ponding of sediment laden runoff shall be of the dimensions shown on the plans.
8. Rock filter dam types 2 & 3 shall be secured with 20 gauge galvanized woven wire mesh with 1" diameter hexagonal openings. The aggregate shall be placed on the mesh to the height & slopes specified. The mesh shall be folded at the upstream side over the aggregate and tightly secured to itself on the downstream side using wire ties or hog rings. For in stream use, the mesh should be secured or staked to the stream bed prior to aggregate placement.
9. Sack Gabions should be staked down with ¾" dia. rebar stakes, and have a double-twisted hexagonal weave with a nominal mesh opening of 2 ½" x 3 ¼"
10. Flow outlet should be onto a stabilized area (vegetation, rock, etc.).
11. The guidelines shown hereon are suggestions only and may be modified by the Engineer.

PLAN SHEET LEGEND

Type 1 Rock Filter Dam — RFD1
Type 2 Rock Filter Dam — RFD2
Type 3 Rock Filter Dam — RFD3
Type 4 Rock Filter Dam — RFD4

Texas Department of Transportation

Design Division Standard

TEMPORARY EROSION, SEDIMENT AND WATER POLLUTION CONTROL MEASURES

ROCK FILTER DAMS

EC(2)-16

FILE: ec216	DN: TxDOT	CK: KM	DW: VP	DN/CK: LS		
© TxDOT: JULY 2016	CONT	SECT	JOB	HIGHWAY		
REVISIONS	0912	73	215	FM 270 ETC		
	DIST	COUNTY		SHEET NO.		
	HOU	GALVESTON		346		

DISCLAIMER:
The use of this standard is governed by the "Texas Engineering Practice Act". No warranty of any kind is made by TxDOT for any purpose whatsoever. TxDOT assumes no responsibility for the conversion of this standard to other formats or for incorrect results or damages resulting from its use.

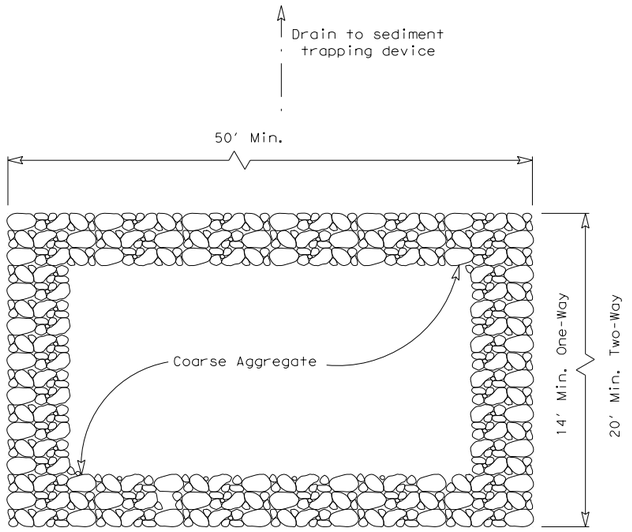

PLAN VIEW

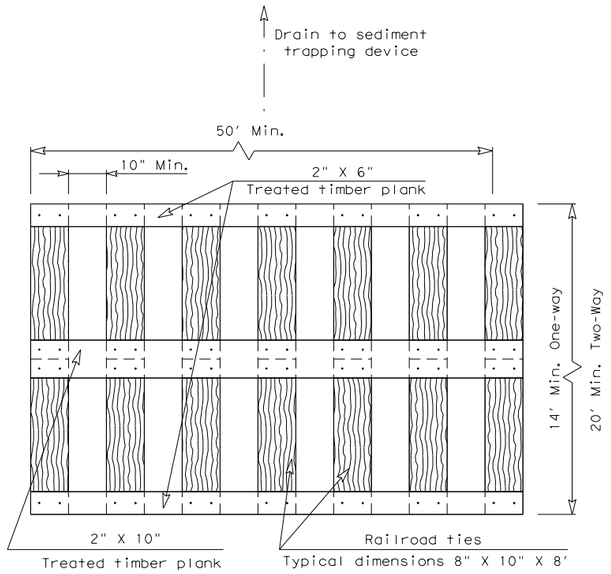

PLAN VIEW

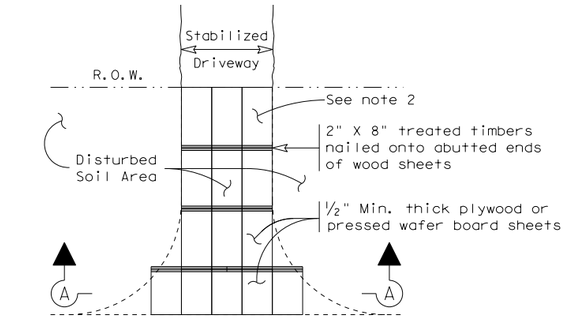

PLAN VIEW

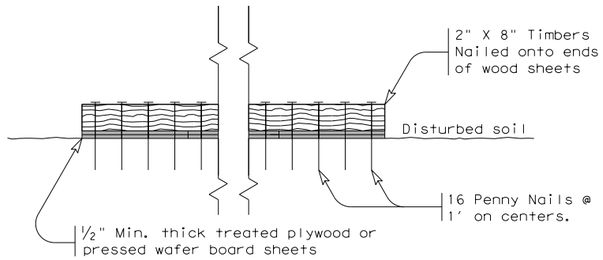

SECTION A-A

CONSTRUCTION EXIT (TYPE 3)

SHORT TERM

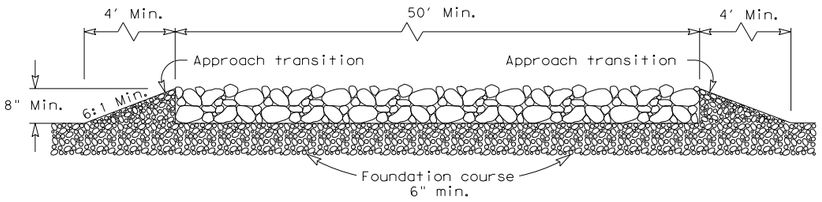

ELEVATION VIEW

CONSTRUCTION EXIT (TYPE 1)

ROCK CONSTRUCTION (LONG TERM)

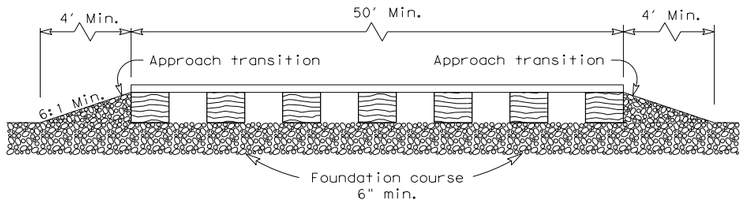

ELEVATION VIEW

CONSTRUCTION EXIT (TYPE 2)

TIMBER CONSTRUCTION (LONG TERM)

GENERAL NOTES (TYPE 1)

1. The length of the type 1 construction exit shall be as indicated on the plans, but not less than 50′.
2. The coarse aggregate should be open graded with a size of 4" to 8".
3. The approach transitions should be no steeper than 6:1 and constructed as directed by the Engineer.
4. The construction exit foundation course shall be flexible base, bituminous concrete, portland cement concrete or other materialas approved by the Engineer.
5. The construction exit shall be graded to allow drainage to a sediment trapping device.
6. The guidelines shown hereon are suggestions only and may be modified by the Engineer.
7. Construct exits with a width of at least 14 ft. for one-way and 20 ft. for two-way traffic for the full width of the exit, or as directed by the engineer.

GENERAL NOTES (TYPE 2)

1. The length of the type 2 construction exit shall be as indicated on the plans, but not less than 50′.
2. The treated timber planks shall be attached to the railroad ties with ½"x 6" min. lag bolts. Other fasteners may be used as approved by the Engineer.
3. The treated timber planks shall be #2 grade min., and should be free from large and loose knots.
4. The approach transitions shall be no steeper than 6:1 and constructed as directed by the Engineer.
5. The construction exit foundation course shall be flexible base, bituminous concrete, portland cement concrete or other material as approved by the Engineer.
6. The construction exit should be graded to allow drainage to a sediment trapping device.
7. The guidelines shown hereon are suggestions only and may be modified by the Engineer.
8. Construct exits with a width of at least 14 ft. for one-way and 20 ft. for two-way traffic for the full width of the exit, or as directed by the engineer.

GENERAL NOTES (TYPE 3)

1. The length of the type 3 construction exit shall be as shown on the plans, or as directed by the Engineer.
2. The type 3 construction exit may be constructed from open graded crushed stone with a size of two to four inches spread a min. of 4" thick to the limits shown on the plans.
3. The treated timber planks shall be #2 grade min., and should be free from large and loose knots.
4. The guidelines shown hereon are suggestions only and may be modified by the Engineer.

Texas Department of Transportation

Design Division Standard

TEMPORARY EROSION, SEDIMENT AND WATER POLLUTION CONTROL MEASURES

CONSTRUCTION EXITS

EC(3)-16

FILE: ec316	DN: TxDOT		CK: KM		DW: VP	DN/CK: LS
©TxDOT: JULY 2016	CONT	SECT	JOB		HIGHWAY	
REVISIONS	0912	73	215		FM 270 ETC	
	DIST	COUNTY			SHEET NO.	
	HOU	GALVESTON			347	

DATE: 7/26/2023
FILE: $FILE$

CURB INLETS
8" DIAMETER LOGS

ITEM 506-6040 BIODEG EROSN CONT LOGS (INSTL) (8")

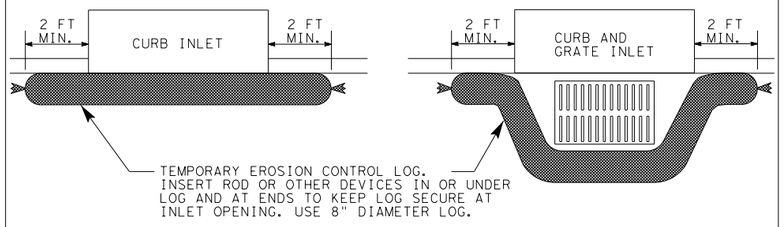

DROP INLETS AND OTHER LOCATIONS
12" DIAMETER LOGS

ITEM 506-6041 BIODEG EROSN CONT LOGS (INSTL)(12")

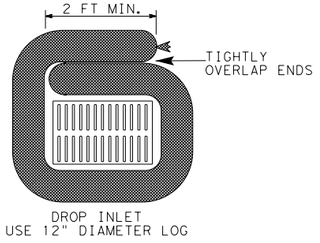

DROP INLETS

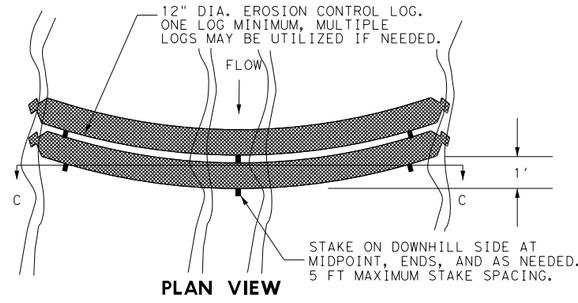

PLAN VIEW

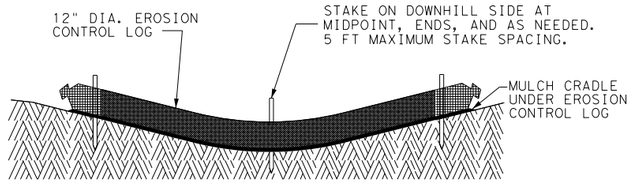

SECTION C-C

DRAINAGE SWALE OR DITCH

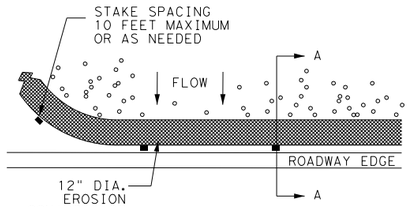

PLAN VIEW

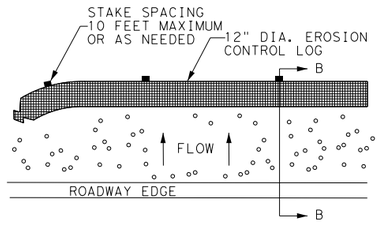

PLAN VIEW

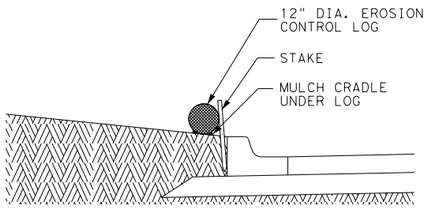

SECTION A-A

SLOPE TO ROADWAY EDGE

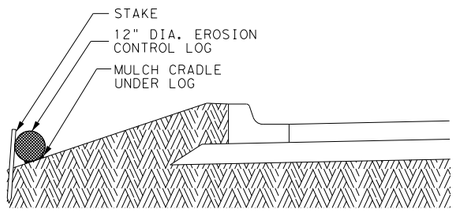

SECTION B-B

SLOPE AWAY FROM ROADWAY EDGE

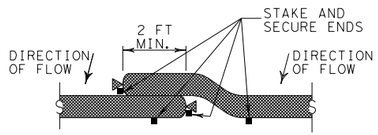

END OF LOG OVERLAP

MATERIAL REQUIREMENTS

FILL:

Use 100% shredded mulch or other non-compost biodegradable material as fill for logs. No compost or fines.

DO NOT USE MATERIAL WHICH PROHIBITS WATER INFILTRATION.

LOG MESH:
Use mesh with 1/4" openings or larger. Mesh must allow water infiltration but also hold fill material in place.

SEDIMENT BASIN & TRAP USAGE GUIDELINES

A sediment trap (erosion control log) may be used to filter sediment out of runoff draining from an unstabilized area.

Traps: The drainage area for a sediment trap should not exceed 5 acres. The trap capacity should be 1800 CF/Acre (0.5" over the drainage area).

Sediment traps should be placed in the following locations:

1. Within drainage ditches spaced as needed or min. 500' on center
2. Immediately preceding ditch inlets
3. Just before the drainage enters a water course
4. Just before the drainage leaves the right of way

The trap should be cleaned when the capacity has been reduced by 1/2 or the sediment has accumulated to a depth of 1', whichever is less.

REQUIRED ITEMS:

- ITEM 506-6040 BIODEG EROSN CONT LOGS (INSTL) (8") LF
- ITEM 506-6041 BIODEG EROSN CONT LOGS (INSTL) (12") LF
- ITEM 506-6043 BIODEG EROSN CONT LOGS (REMOVE) LF

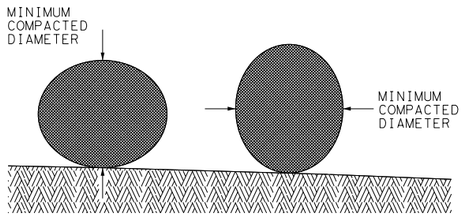

DIAMETER MEASUREMENTS OF EROSION CONTROL LOGS SPECIFIED IN PLANS

Texas Department of Transportation
Houston District

EROSION CONTROL LOG

ECL-12

FILE: STDG4a.DGN	DN: TxDot	CK: TxDot	DW: TxDot	CK: TxDot			
© TxDOT 2014	DISTRICT	FED REG	PROJECT NUMBER				SHEET
REVISIONS 3/15 MINOR CORRECTIONS	HOU	6					348
	COUNTY		CONTROL	SECT	JOB	HIGHWAY	
	GALVESTON		0912	73	215	FM 270 ETC	

TYPE OF WORK — ITEMS AND REQUIREMENTS FOR EACH TYPE OF WORK

SODDING	PERMANENT SEEDING	TEMPORARY SEEDING	Reference Item 161, 162, 164, 166, 168 of the Texas Standard Specifications for Construction and Maintenance of Highways, Streets and Bridges 2014 for specifications, dimensions, volumes and measurements that are not shown. Use latest Houston District, Special Provisions for those items indicated.		
	✓		161-6017 COMPOST MANUF TOPSOIL (BIP)(4") SY	APPLICATION RATE Item 161.2.1. Compost Manufactured Topsoil (CMT)	Item 161.2. Materials. Submit quality control (QC) documentation to the Engineer. Compost producer's STA certification must be dated to meet STA requirements (certification must be within 30 or 90 days per STA requirements). Lab analysis performed by an STA-certified lab must be dated within 30 days before delivery of the compost.
✓			162-6002 BLOCK SODDING SY	GRASS SPECIES Item 162.2. Materials. Common Bermuda (Cynodon Dactylon)	Item 162.2.1. Block Sod. Use block palletized or roll type sod. REMOVE PLASTIC BACKING FROM ROLL TYPE SOD. Place sod within 48 hours of delivery to site. No exceptions. Place sod with joints alternating on each row to prevent continuous joint lines. Peg sod as needed with wood pegs to hold sod in place. Pegging sod is subsidiary to Item 162.
	✓		164-6066 DRILL SEEDING(PERM)(WARM OR COOL) SY Item 164.1. Description Provide and install seeding as shown on District Standard	PLANTING MONTH / SEED MIX March, April, May, June, July, August, September, October: Hulled - Bermudagrass (Cynodon dactylon) - 40.0 lbs PLS/acre Foxtail Millet (Setaria italica) - 34.0 lbs PLS/acre Green Sprangletop (Leptochloa dubia) - 4.0 lbs PLS/acre Sideoats Grama (Bouteloua curtipendula) - 3.2 lbs PLS/acre Little Bluestem (Schizachyrium scoparium) - 1.4 lbs PLS/acre November, December, January, February,: Unhulled - Bermudagrass (Cynodon dactylon) - 40.0 lbs PLS/acre Oats (Avena sativa) - 72.0 lbs PLS/acre Green Sprangletop (Leptochloa dubia) - 4.0 lbs PLS/acre Sideoats Grama (Bouteloua curtipendula) - 3.2 lbs PLS/acre Little Bluestem (Schizachyrium scoparium) - 1.4 lbs PLS/acre	PLS (Pure Live Seed) Provide documentation of PLS requirements per Item 164.2.1. CONSTRUCTION. Cultivate the area to a depth of 4 inches before placing the seed unless otherwise directed. When performing permanent seeding after an established temporary seeding, cultivate the seedbed to a depth of 4 inches or mow the area before placement of the permanent seed. Plant the seed and place the straw or hay mulch after the area has been completed to lines and grades as shown on the plans. Drill Seeding. Plant seed or seed mixture uniformly over the area shown on the plans at a depth of 1/4 to 1/3 inch using a cultipacker(turfgrass) type seeder. Plant seed along the contour of the slopes. Use broadcast seeding method where site conditions prevent drill seeding method. Broadcast Seeding. Distribute the dry seed or dry seed mixture uniformly over the areas shown on the plans using hand or mechanical distribution on top of soil.
	✓		164-6052 BROADCAST SEED(PERM)(SPECIAL MIX) SY Item 164.1. Description Provide and install seeding as shown on District Standard		
		✓	164-6051 DRILL SEED(TEMP)(WARM OR COOL) SY Item 164.1. Description Provide and install seeding as shown on District Standard	PLANTING MONTH / SEED MIX March, April, May, June, July, August, September, October: Foxtail Millet (Setaria italica) - 34.0 lbs PLS/acre November, December, January, February,: Oats (Avena sativa - 72.0 lbs PLS/acre	
		✓	164-6009 BROADCAST SEED(TEMP)(WARM) SY Item 164.1. Description Provide and install seeding as shown on District Standard		
	✓	✓	162-6003 STRAW OR HAY MULCH SY	APPLICATION RATE Immediately after planting the seed or seed mixture, apply straw or hay mulch uniformly over the seeded area. Apply straw or hay mulch at 2 tons per acre. Use tacking agent with straw or hay mulch as described on this sheet.	Use straw or hay mulch in conformance with Article 162.2.5, "Mulch." Use biodegradable tacking agents only applied at a rate in accordance with manufacturer's recommendations. Use the following products or an approved equal(see note this sheet): Conweb/Contac Guar Gum, Profile Products Corporation, (307) 655-9565, Ramtec/Procol/Viscol Guar Gum, Ramtec Corporation, (800) 366-1180
✓	✓	✓	166-6001 FERTILIZER AC Item 166.2. Materials Use fertilizer as shown on District Standard	APPLICATION RATE Deliver and evenly distribute fertilizer at a rate of 4000 lbs/acre.	Use a **NON-CHEMICAL** fertilizer which meets all the following criteria: (1) BRAND NAME must be registered with the Texas State Chemist as a commercial fertilizer. (2) Meets USEPA guidelines for unrestricted use. (3) Derived from biological sources such as, but not limited to: sewage sludge, manures, vegetation, etc. (4) In granular form and essentially dust free. Submit proof of registration and nutrient source to Engineer. Use the following products or an approved equal(see note this sheet): Sigma, SIGMA AgriScience, 281-851-6749 Sustanite-standard grade, Automation Nation, Inc., 713-675-4999 Milorganite, MMSD, 800-287-9645 Agricultural Organic P/L, Ag Org, INC., 713-523-4396
✓	✓	✓	168-6001 VEGETATIVE WATERING MG	APPLICATION RATE Item 168.3 Construction. 6000 gallons/acre per working day X 20 consecutive working days = 120,000 gallons total/acre	Begin watering immediately after installation of seed or sod. Replace, fertilize, and water any seed or sod in poor condition due to the failure to apply the specified amount of water within the time allowed at no expense to the Department.

SEQUENCE OF WORK

BLOCK SOD	PERMANENT SEEDING	TEMPORARY SEEDING
1. FERTILIZER 2. CULTIVATE SOIL (ITEM 162.3) 3. SOD 4. VEGETATIVE WATERING	1. FERTILIZER 2. COMPOST MANUFACTURED TOPSOIL 3. CULTIVATE SOIL (ITEMS 164.3 AND 161.3.1) 4. PERMANENT SEEDING 5. STRAW OR HAY MULCH 6. VEGETATIVE WATERING	1. FERTILIZER 2. CULTIVATE SOIL (PER ITEM 164.3) 3. TEMPORARY SEEDING 4. STRAW OR HAY MULCH 5. VEGETATIVE WATERING

Texas Department of Transportation
© 2014

HOUSTON DISTRICT

FERTILIZER, SEED, SOD, STRAW, COMPOST, AND WATER

SHEET 1 OF 1

REVISIONS	FILE:	FED DIV	STATE	PROJECT NUMBER			SHEET
10/2014 UPDATED TO 2014 SPECS 3/2015 MINOR CORRECTIONS	OCT 2014	6	TEXAS				349
	ORIGINAL:	DIST	COUNTY	CONTROL	SECT	JOB	HIGHWAY
		12	GALVESTON	0912	73	215	FM 270 ETC