DocuSign Envelope ID: 347C5698-B062-4CA4-B1E5-AAE08E0C6FFB

FED. RD. DIV. NO.	PROJECT ID.		HIGHWAY NO.
6	F 2021(567)		US 84
STATE	DISTRICT	COUNTY	SHEET NO.
TEXAS	WACO	MCLENNAN	1
CONTROL	SECTION	JOB	
0055	15	072	

DESIGN SPEED = 40 MPH

YEAR	AADT
2018	35,488
2038	39,140

STATE OF TEXAS
DEPARTMENT OF TRANSPORTATION

PLANS OF PROPOSED STATE HIGHWAY IMPROVEMENT

FEDERAL AID PROJECT: F 2021(567)

MCLENNAN COUNTY

US 84

CSJ 0055-15-072

INDEX OF SHEETS

SHEET NO.	DESCRIPTION
1	TITLE SHEET
2	INDEX OF SHEETS

Registered Accessibility Specialist (RAS) inspection required. TDLR No. TABS2021003233

TOTAL LENGTH OF PROJECT =

ROADWAY	=	29,155.83	FT.	=	5.522 MI.
BRIDGE	=	940.17	FT.	=	0.178 MI.
TOTAL	=	30,096.00	FT.	=	5.700 MI.

LIMITS: FROM 0.15 MI W OF LAKE AIR DR TO FM 933

FOR THE CONSTRUCTION OF SAFETY CONSISTING OF INTERSECTION & PEDESTRIAN IMPROVEMENTS

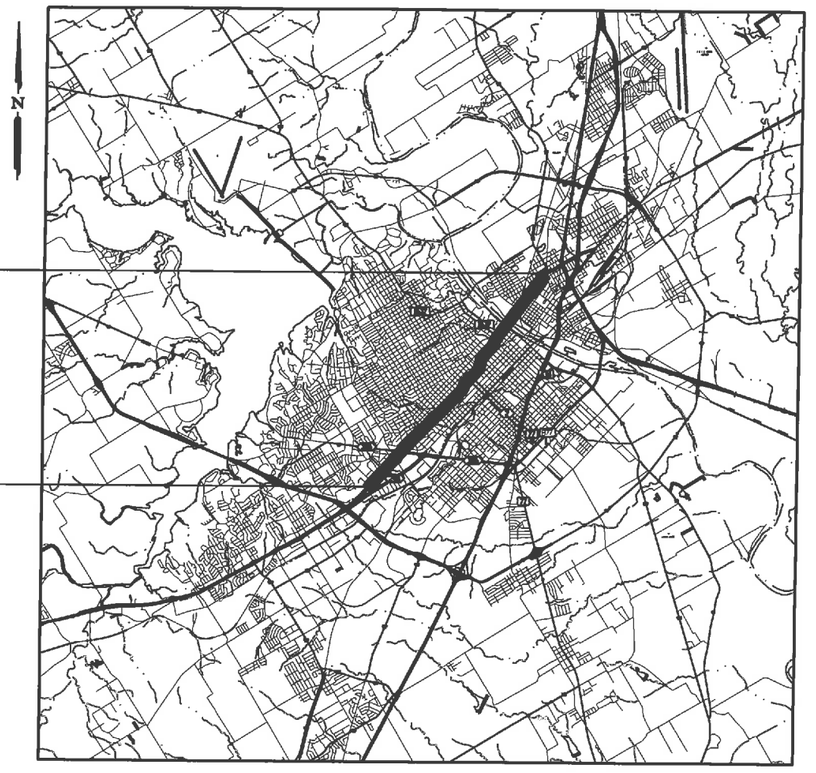

END CONSTRUCTION
END CSJ 0902-90-076
US 84 AT TX 933 (CLIFTON STREET)

BEGIN CONSTRUCTION
BEGIN CSJ 0902-90-076
US 84 AT CENTERPOINT

SPECIFICATIONS ADOPTED BY THE TEXAS DEPARTMENT OF TRANSPORTATION, NOVEMBER 1, 2014 AND SPECIFICATION ITEMS LISTED AND DATED AS FOLLOWS, WILL GOVERN ON THIS PROJECT: REQUIRED CONTRACT PROVISIONS FOR ALL FEDERAL - AID CONSTRUCTION CONTRACTS(FORM FHWA 1273, MAY 2012).

EXCEPTIONS: NONE
EQUATIONS: NONE
RR CROSSINGS: NONE
SCALE: 1" = 3 MI

Kimley»Horn
TBPE REGISTERED ENGINEERING FIRM # F-928
801 CHERRY STREET, UNIT 11, SUITE 1300
FORT WORTH, TEXAS 76102
P: 817-335-6511
F: 817-335-5070

SUBMITTED FOR LETTING: 03/01/2021

PROJECT MANAGER
KIMLEY-HORN AND ASSOCIATES, INC.

CITY OF WACO
CITY OF WACO PUBLIC WORKS DEPARTMENT
401 FRANKLIN AVENUE
WACO, TEXAS 76701
P: 254-750-5674

CITY CONCURRENCE: 3/1/2021

PUBLIC WORKS DIRECTOR
CITY OF WACO PUBLIC WORKS DEPARTMENT

© 2020 Texas Department of Transportation

RECOMMENDED FOR LETTING: 3/3/2021
, P.E.
AREA ENGINEER

RECOMMENDED FOR LETTING: 3/5/2021
, P.E.
DIRECTOR OF TRANSPORTATION PLANNING & DEVELOPMENT

APPROVED FOR LETTING: 3/5/2021
DocuSigned by:
Stanley Swiatek, P.E.
B69BD796DD564C9
DISTRICT ENGINEER

© 2021 by Texas Department of Transportation; all rights reserved.

$TIME$ $DATE$ $FILE$ NODE

INDEX OF SHEETS

SHEET NO.	DESCRIPTION
	I. GENERAL
1	TITLE SHEET
2 - 3	INDEX OF SHEETS
4 - 6	PROJECT LAYOUT
7	TYPICAL SECTIONS
8, 8A-8I	GENERAL NOTES
9, 9A-9E	ESTIMATE AND QUANTITY SHEET
10 - 23	QUANTITY SUMMARY
24 - 31	SUMMARY OF SMALL SIGNS
	II. TRAFFIC CONTROL PLAN
32 - 33	TRAFFIC CONTROL PLAN NARRATIVE
34 - 35	TRAFFIC CONTROL PLAN TYPICAL SECTIONS
	TRAFFIC CONTROL STANDARDS
36 - 47	**BC(1)-14 THRU BC(12)-14
48	**TCP(2-1)-18
49	**TCP(2-4)-18
50	**WZ(BTS-1)-13
51	**WZ(BTS-2)-13
	III. ROADWAY DETAILS
52 - 54	SURVEY CONTROL INDEX SHEET
55 - 58	HORIZONTAL ALIGNMENT DATA
59 - 132	SIDEWALK LAYOUT
133 - 135	CURB RAMP DATA
136	GRADING LAYOUT - INDUSTRIAL DRIVE
137	GRADING LAYOUT - NORTH 15TH STREET
138 - 139	RIPRAP LAYOUT - N NEW ROAD TO LOOP 396
140-145, 145A, 146	DRIVEWAY GRADING LAYOUTS
147 - 150	DRIVEWAY DETAILS
151	INTERSECTION RECONSTRUCTION DETAILS
152 - 164	MISCELLANEOUS DETAILS
165	COLORED TEXTURED CONCRETE DETAILS
166	ARMOR CURB SLOT
166A	MANHOLE ADJUSTMENT DETAIL
	ROADWAY STANDARDS
167 - 169	**CONCRETE SIDEWALK DETAILS (WACO DISTRICT)
170 - 171	**WACO DISTRICT HANDRAIL STANDARD
172	OMIT
173	**CCCG-21
174	**CRCP(1)-20
175 - 178	OMIT
179	**JS-14
180 - 183	**PED-18
184 - 185	OMIT
186 - 189	**D & OM (1)-20 THRU D & OM (4)-20
190	**D & OM (6)-20
191	**D & OM (VIA)-20
192	**RW(CB)
	IV. DRAINAGE DETAILS
193	BRIDGE CLASS CULVERT - CULVERT #1 - WACO CREEK
194	BRIDGE CLASS CULVERT - CULVERT #2 - TRIBUTARY OF WACO CREEK
195 - 196	CULVERT LAYOUTS
197 - 198	GRADING LAYOUT
199 - 200	TEMPORARY SPECIAL SHORING PLAN AND PROFILE
201 - 203	STORM SEWER PLAN AND PROFILE
204	MANHOLE AND INLET CAP DETAILS
205	INLET(COMPL)(DROP)(SPL)
206	CAST-IN-PLACE CURB INLET OUTSIDE ROADWAY (CCO MOD)
206A - 206C	EXISTING CURB INLET DETAILS
207	BCS
	DRAINAGE STANDARDS
208 - 209	**RAC-R (MOD)
210	**PW (MOD)
210A	**CGT-PCO
211	**CRR
212	**ECD
213 - 214	**MC-9-10
215	**MC-MD
216	**PAZD
217	**PB
218 - 219	**PCO
219A	**PDD
220	**PW
221 - 222	**RAC
223	**PSET-RP
224	**SRR
225 - 228	**TYPE C2P

SHEET NO.	DESCRIPTION
	V. TRAFFIC ITEMS
	US 84 (WACO DRIVE) AT CENTERPOINT
229	CONDITION DIAGRAM (CENTERPOINT)
230	PROPOSED TRAFFIC SIGNAL (CENTERPOINT)
231	TRAFFIC SIGNAL SIGNS AND HEADS (CENTERPOINT)
232	CONDUIT AND CONDUCTOR SUMMARY (CENTERPOINT)
233	TRAFFIC SIGNAL SUMMARY (CENTERPOINT)
	US 84 (WACO DRIVE) AT LAKE AIR DR
234	CONDITION DIAGRAM (LAKE AIR DR)
235	PROPOSED TRAFFIC SIGNAL (LAKE AIR DR)
236	TRAFFIC SIGNAL SIGNS AND HEADS (LAKE AIR DR)
237	CONDUIT AND CONDUCTOR SUMMARY (LAKE AIR DR)
238	TRAFFIC SIGNAL SUMMARY (LAKE AIR DR)
	US 84 (WACO DRIVE) AT TOWNE OAKS DR
239	CONDITION DIAGRAM (TOWNE OAKS DR)
240	PROPOSED TRAFFIC SIGNAL (TOWNE OAKS DR)
241	TRAFFIC SIGNAL SIGNS AND HEADS (TOWNE OAKS DR)
242	CONDUIT AND CONDUCTOR SUMMARY (TOWNE OAKS DR)
243	TRAFFIC SIGNAL SUMMARY (TOWNE OAKS DR)
	US 84 (WACO DRIVE) AT SUN VALLEY DR
244	CONDITION DIAGRAM (SUN VALLEY DR)
245	PROPOSED TRAFFIC SIGNAL (SUN VALLEY DR)
246	TRAFFIC SIGNAL SIGNS AND HEADS (SUN VALLEY DR)
247	CONDUIT AND CONDUCTOR SUMMARY (SUN VALLEY DR)
248	TRAFFIC SIGNAL SUMMARY (SUN VALLEY DR)
	US 84 (WACO DRIVE) AT N. NEW RD
249	CONDITION DIAGRAM (N. NEW RD)
250	PROPOSED TRAFFIC SIGNAL (N. NEW RD)
251	TRAFFIC SIGNAL SIGNS AND HEADS (N. NEW RD)
252	CONDUIT AND CONDUCTOR SUMMARY (N. NEW RD)
253	TRAFFIC SIGNAL SUMMARY (N. NEW RD)
	US 84 (WACO DRIVE) AT VALLEY MILLS RD
254	CONDITION DIAGRAM (VALLEY MILLS RD)
255	PROPOSED TRAFFIC SIGNAL (VALLEY MILLS RD)
256	TRAFFIC SIGNAL SIGNS AND HEADS (VALLEY MILLS RD)
257	CONDUIT AND CONDUCTOR SUMMARY (VALLEY MILLS RD)
258	TRAFFIC SIGNAL SUMMARY (VALLEY MILLS RD)
	US 84 (WACO DRIVE) AT N. 38TH ST
259	CONDITION DIAGRAM (N. 38TH ST)
260	PROPOSED TRAFFIC SIGNAL (N. 38TH ST)
261	TRAFFIC SIGNAL SIGNS AND HEADS (N. 38TH ST)
262	CONDUIT AND CONDUCTOR SUMMARY (N. 38TH ST)
263	TRAFFIC SIGNAL SUMMARY (N. 38TH ST)
	US 84 (WACO DRIVE) AT N. 36TH ST
264	CONDITION DIAGRAM (N. 36TH ST)
265	PROPOSED TRAFFIC SIGNAL (N. 36TH ST)
266	TRAFFIC SIGNAL SIGNS AND HEADS (N. 36TH ST)
267	CONDUIT AND CONDUCTOR SUMMARY (N. 36TH ST)
268	TRAFFIC SIGNAL SUMMARY (N. 36TH ST)
	US 84 (WACO DRIVE) AT N. 29TH ST
269	CONDITION DIAGRAM (N. 29TH ST)
270	PROPOSED TRAFFIC SIGNAL (N. 29TH ST)
271	TRAFFIC SIGNAL SIGNS AND HEADS (N. 29TH ST)
272	CONDUIT AND CONDUCTOR SUMMARY (N. 29TH ST)
273	TRAFFIC SIGNAL SUMMARY (N. 29TH ST)
	US 84 (WACO DRIVE) AT N. 26TH ST
274	CONDITION DIAGRAM (N. 26TH ST)
275	PROPOSED TRAFFIC SIGNAL (N. 26TH ST)
276	TRAFFIC SIGNAL SIGNS AND HEADS (N. 26TH ST)
277	CONDUIT AND CONDUCTOR SUMMARY (N. 26TH ST)
278	TRAFFIC SIGNAL SUMMARY (N. 26TH ST)
	US 84 (WACO DRIVE) AT N. 25TH ST
279	CONDITION DIAGRAM (N. 25TH ST)
280	PROPOSED TRAFFIC SIGNAL (N. 25TH ST)
281	TRAFFIC SIGNAL SIGNS AND HEADS (N. 25TH ST)
282	CONDUIT AND CONDUCTOR SUMMARY (N. 25TH ST)
283	TRAFFIC SIGNAL SUMMARY (N. 25TH ST)

SHEET NO.	DESCRIPTION
	V. TRAFFIC ITEMS (CONT.)
	US 84 (WACO DRIVE) AT N. 18TH ST
284	CONDITION DIAGRAM (N. 18TH ST)
285	PROPOSED TRAFFIC SIGNAL (N. 18TH ST)
286	TRAFFIC SIGNAL SIGNS AND HEADS (N. 18TH ST)
287	CONDUIT AND CONDUCTOR SUMMARY (N. 18TH ST)
288	TRAFFIC SIGNAL SUMMARY (N. 18TH ST)
	US 84 (WACO DRIVE) AT N. 17TH ST
289	CONDITION DIAGRAM (N. 17TH ST)
290	PROPOSED TRAFFIC SIGNAL (N. 17TH ST)
291	TRAFFIC SIGNAL SIGNS AND HEADS (N. 17TH ST)
292	CONDUIT AND CONDUCTOR SUMMARY (N. 17TH ST)
293	TRAFFIC SIGNAL SUMMARY (N. 17TH ST)
	US 84 (WACO DRIVE) AT N. 15TH ST
294	CONDITION DIAGRAM (N. 15TH ST)
295	PROPOSED TRAFFIC SIGNAL (N. 15TH ST)
296	TRAFFIC SIGNAL SIGNS AND HEADS (N. 15TH ST)
297	CONDUIT AND CONDUCTOR SUMMARY (N. 15TH ST)
298	TRAFFIC SIGNAL SUMMARY (N. 15TH ST)
	US 84 (WACO DRIVE) AT N. 12TH ST
299	CONDITION DIAGRAM (N. 12TH ST)
300	PROPOSED TRAFFIC SIGNAL (N. 12TH ST)
301	TRAFFIC SIGNAL SIGNS AND HEADS (N. 12TH ST)
302	CONDUIT AND CONDUCTOR SUMMARY (N. 12TH ST)
303	TRAFFIC SIGNAL SUMMARY (N. 12TH ST)
	US 84 (WACO DRIVE) AT N. 11TH ST
304	CONDITION DIAGRAM (N. 11TH ST)
305	PROPOSED TRAFFIC SIGNAL (N. 11TH ST)
306	TRAFFIC SIGNAL SIGNS AND HEADS (N. 11TH ST)
307	CONDUIT AND CONDUCTOR SUMMARY (N. 11TH ST)
308	TRAFFIC SIGNAL SUMMARY (N. 11TH ST)
	US 84 (WACO DRIVE) AT N. 9TH ST
309	CONDITION DIAGRAM (N. 9TH ST)
310	PROPOSED TRAFFIC SIGNAL (N. 9TH ST)
311	TRAFFIC SIGNAL SIGNS AND HEADS (N. 9TH ST)
312	CONDUIT AND CONDUCTOR SUMMARY (N. 9TH ST)
313	TRAFFIC SIGNAL SUMMARY (N. 9TH ST)
	US 84 (WACO DRIVE) AT N. 5TH ST
314	CONDITION DIAGRAM (N. 5TH ST)
315	PROPOSED TRAFFIC SIGNAL (N. 5TH ST)
316	TRAFFIC SIGNAL SIGNS AND HEADS (N. 5TH ST)
317	CONDUIT AND CONDUCTOR SUMMARY (N. 5TH ST)
318	TRAFFIC SIGNAL SUMMARY (N. 5TH ST)

STATE OF TEXAS — SCOTT R. ARNOLD — 96782 — LICENSED PROFESSIONAL ENGINEER

THE STANDARD SHEETS SPECIFICALLY IDENTIFIED ON THIS SHEET WITH A "**" HAVE BEEN SELECTED BY ME OR UNDER MY RESPONSIBLE SUPERVISION AS BEING APPLICABLE TO THIS PROJECT.

Scott Arnold, P.E. — NAME — 03/30/2021 — DATE

STATE OF TEXAS — JOSHUA W. RUTLEDGE — 129231 — LICENSED PROFESSIONAL ENGINEER

THE STANDARD SHEETS SPECIFICALLY IDENTIFIED ON THIS SHEET WITH A "**" HAVE BEEN SELECTED BY ME OR UNDER MY RESPONSIBLE SUPERVISION AS BEING APPLICABLE TO THIS PROJECT.

Josh Rutledge, P.E. — NAME — 03/30/2021 — DATE

Kimley»Horn F-928

© 2021

Texas Department of Transportation

INDEX OF SHEETS

SHEET 1 OF 2

FED. RD. DIV. NO.	PROJECT ID.	HIGHWAY NO.
6	(SEE TITLE SHEET)	US 84

STATE	DIST.	COUNTY	SHEET NO.
TEXAS	WAC	MCLENNAN	2
CONT.	SECT.	JOB	
0055	15	072	

FILENAME: pw:\\kh-pw.bentley.com:kh-pw-01\Documents\01 Active Projects\TX-FTW-063586010 - US 84 (Waco Drive)\WAC 005515072\4 - Design\Plan Set\1. General\US84_GEN_INDEX01.dgn
PLOTTED: 12/21/2020

INDEX OF SHEETS

SHEET NO.	DESCRIPTION
	V. TRAFFIC ITEMS (CONT.)
	US 84 (WACO DRIVE) AT N. 4TH ST
319	CONDITION DIAGRAM (N. 4TH ST)
320	PROPOSED TRAFFIC SIGNAL (N. 4TH ST)
321	TRAFFIC SIGNAL SIGNS AND HEADS (N. 4TH ST)
322	CONDUIT AND CONDUCTOR SUMMARY (N. 4TH ST)
323	TRAFFIC SIGNAL SUMMARY (N. 4TH ST)
	US 84 (WACO DRIVE) AT DALLAS ST
324	CONDITION DIAGRAM (DALLAS ST)
325	PROPOSED TRAFFIC SIGNAL (DALLAS ST)
326	TRAFFIC SIGNAL SIGNS AND HEADS (DALLAS ST)
327	CONDUIT AND CONDUCTOR SUMMARY (DALLAS ST)
328	TRAFFIC SIGNAL SUMMARY (DALLAS ST)
	US 84 (WACO DRIVE) AT TURNER ST
329	CONDITION DIAGRAM (TURNER ST)
330	PROPOSED TRAFFIC SIGNAL (TURNER ST)
331	TRAFFIC SIGNAL SIGNS AND HEADS (TURNER ST)
332	CONDUIT AND CONDUCTOR SUMMARY (TURNER ST)
333	TRAFFIC SIGNAL SUMMARY (TURNER ST)
	US 84 (WACO DRIVE) AT GARRISON ST
334	CONDITION DIAGRAM (GARRISON ST)
335	PROPOSED TRAFFIC SIGNAL (GARRISON ST)
336	TRAFFIC SIGNAL SIGNS AND HEADS (GARRISON ST)
337	CONDUIT AND CONDUCTOR SUMMARY (GARRISON ST)
338	TRAFFIC SIGNAL SUMMARY (GARRISON ST)
	US 84 (WACO DRIVE) AT CLIFTON ST
339	CONDITION DIAGRAM (CLIFTON ST)
340	PROPOSED TRAFFIC SIGNAL (CLIFTON ST)
341	TRAFFIC SIGNAL SIGNS AND HEADS (CLIFTON ST)
342	CONDUIT AND CONDUCTOR SUMMARY (CLIFTON ST)
343	TRAFFIC SIGNAL SUMMARY (CLIFTON ST)
	PAVEMENT MARKINGS
344	PROPOSED PAVEMENT MARKINGS (CENTERPOINT)
345	PAVEMENT MARKINGS SUMMARY (CENTERPOINT)
346	PROPOSED PAVEMENT MARKINGS (LAKE AIR DR)
347	PAVEMENT MARKINGS SUMMARY (LAKE AIR DR)
348	PROPOSED PAVEMENT MARKINGS (TOWNE OAKS DR)
349	PAVEMENT MARKINGS SUMMARY (TOWNE OAKS DR)
350	PROPOSED PAVEMENT MARKINGS (SUN VALLEY DR)
351	PAVEMENT MARKINGS SUMMARY (SUN VALLEY DR)
352	PROPOSED PAVEMENT MARKINGS (N. NEW RD)
353	PAVEMENT MARKINGS SUMMARY (N. NEW RD)
354 - 355	PROPOSED PAVEMENT MARKINGS (VALLEY MILLS RD)
356	PAVEMENT MARKINGS SUMMARY (VALLEY MILLS RD)
357	PROPOSED PAVEMENT MARKINGS (N. 38TH ST)
358	PAVEMENT MARKINGS SUMMARY (N. 38TH ST)
359	PROPOSED PAVEMENT MARKINGS (N. 36TH ST)
360	PAVEMENT MARKINGS SUMMARY (N. 36TH ST)
361	PROPOSED PAVEMENT MARKINGS (N. 29TH ST)
362	PAVEMENT MARKINGS SUMMARY (N. 29TH ST)
363	PROPOSED PAVEMENT MARKINGS (N. 26TH ST)
364	PAVEMENT MARKINGS SUMMARY (N. 26TH ST)
365	PROPOSED PAVEMENT MARKINGS (N. 25TH ST)
366	PAVEMENT MARKINGS SUMMARY (N. 25TH ST)
367	PROPOSED PAVEMENT MARKINGS (N. 18TH ST)
368	PAVEMENT MARKINGS SUMMARY (N. 18TH ST)
369	PROPOSED PAVEMENT MARKINGS (N. 17TH ST)
370	PAVEMENT MARKINGS SUMMARY (N. 17TH ST)
371	PROPOSED PAVEMENT MARKINGS (N. 15TH ST)
372	PAVEMENT MARKINGS SUMMARY (N. 15TH ST)
373	PROPOSED PAVEMENT MARKINGS (N. 12TH ST)
374	PAVEMENT MARKINGS SUMMARY (N. 12TH ST)
375	PROPOSED PAVEMENT MARKINGS (N. 11TH ST)
376	PAVEMENT MARKINGS SUMMARY (N. 11TH ST)
377	PROPOSED PAVEMENT MARKINGS (N. 9TH ST)
378	PAVEMENT MARKINGS SUMMARY (N. 9TH ST)
379	PROPOSED PAVEMENT MARKINGS (N. 5TH ST)
380	PAVEMENT MARKINGS SUMMARY (N. 5TH ST)
381	PROPOSED PAVEMENT MARKINGS (N. 4TH ST)
382	PAVEMENT MARKINGS SUMMARY (N. 4TH ST)
383	PROPOSED PAVEMENT MARKINGS (DALLAS ST)
384	PAVEMENT MARKINGS SUMMARY (DALLAS ST)
385	PROPOSED PAVEMENT MARKINGS (TURNER ST)
386	PAVEMENT MARKINGS SUMMARY (TURNER ST)
387	PROPOSED PAVEMENT MARKINGS (GARRISON ST)
388	PAVEMENT MARKINGS SUMMARY (GARRISON ST)
389	PROPOSED PAVEMENT MARKINGS (CLIFTON ST)
390	PAVEMENT MARKINGS SUMMARY (CLIFTON ST)
391	PAVEMENT MARKING DETAIL SIDE STREETS
391A	SIGN DETAILS SHEET

SHEET NO.	DESCRIPTION
	V. TRAFFIC ITEMS (CONT.)
	TRAFFIC STANDARDS
392	*PM(1)-20
393	*PM(2)-20
394	*PM(3)-20
395	*PM(4)-20
396	*SMD(GEN)-08
397	*SMD(SLIP-1)-08
398	*SMD(SLIP-2)-08
399	*SMD(SLIP-3)-08
400	*SMA-80(1)-12
401	*SMA-80(2)-12
402	*DMA-80(1)-12
403	*DMA-80(2)-12
404	*DMA-80(3)-12
405	*MA-C-12
406 - 409	*TS-FD-12
410	*LUM-A-12
411	*LMA(1)-12
412	*LMA(2)-12
413	*LMA(3)-12
414	*LMA(4)-12
415 - 416	*LMA(5)-12
417	*TS-CF DETAIL
418	*MA-DPD-20
419	*TS-BP-20
420	*ED(1)-14
421	*ED(3)-14
422	*ED(4)-14
423	*ED(5)-14
424	*ED(8)-14
425	*ED(9)-14
426	*WV&IZ-14
	VI. ENVIRONMENTAL ISSUES
427	EPIC
428	SW3P (WACO DISTRICT)
	ENVIRONMENTAL STANDARDS
429 - 438	*TA-BMP (WACO DISTRICT)
439	*EC(1)-16
440	*EC(2)-16
441 - 443	*EC(9)-16

FILENAME: pw:\\kh-pw.bentley.com:kh-pw-01\Documents\01 Active Projects\TX-FTW-063586010 - US 84 (Waco Drive)\WAC 0055150721\4 - Design\Plan Set\1. General\US84_GEN_INDEX02.dgn
PLOTTED: 12/21/2020

STATE OF TEXAS — SCOTT R. ARNOLD — 96782 — LICENSED — PROFESSIONAL ENGINEER

THE STANDARD SHEETS SPECIFICALLY IDENTIFIED ON THIS SHEET WITH A "*" HAVE BEEN SELECTED BY ME OR UNDER MY RESPONSIBLE SUPERVISION AS BEING APPLICABLE TO THIS PROJECT.

NAME _____, P.E. 03/30/2021 DATE

STATE OF TEXAS — SCOTT W. RUTLEDGE — 129231 — LICENSED — PROFESSIONAL ENGINEER

THE STANDARD SHEETS SPECIFICALLY IDENTIFIED ON THIS SHEET WITH A "**" HAVE BEEN SELECTED BY ME OR UNDER MY RESPONSIBLE SUPERVISION AS BEING APPLICABLE TO THIS PROJECT.

NAME _____, P.E. 03/30/2021 DATE

Kimley»Horn F-928

© 2021

Texas Department of Transportation

INDEX OF SHEETS

SHEET 2 OF 2

FED. RD. DIV. NO.	PROJECT ID.		HIGHWAY NO.
6	(SEE TITLE SHEET)		US 84
STATE	DIST.	COUNTY	SHEET NO.
TEXAS	WAC	MCLENNAN	3
CONT.	SECT.	JOB	
0055	15	072	

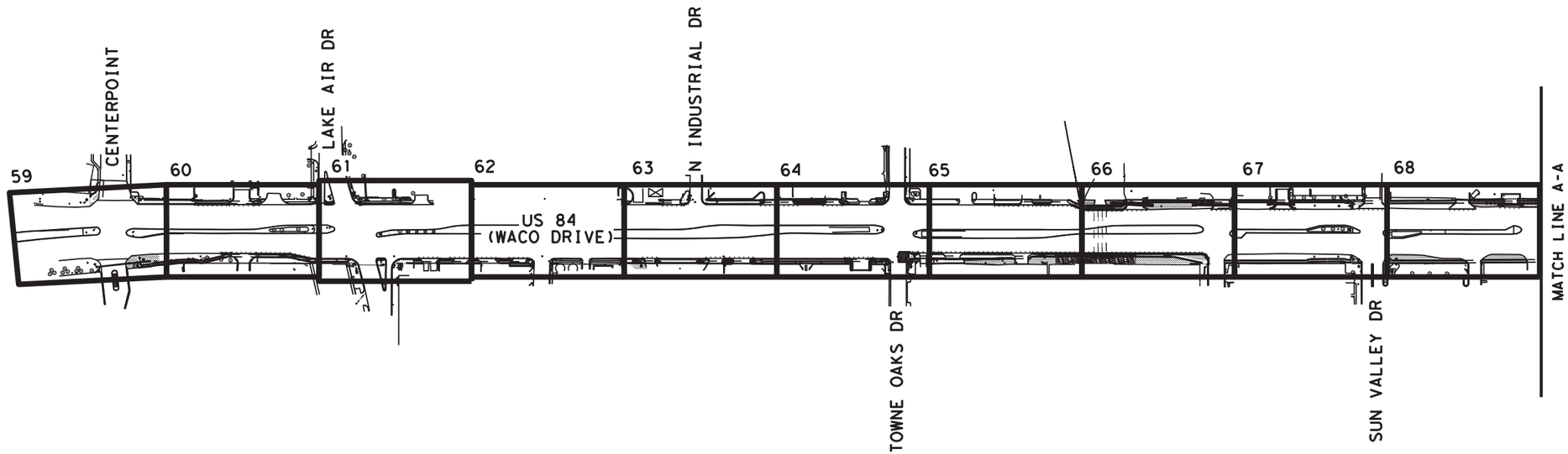

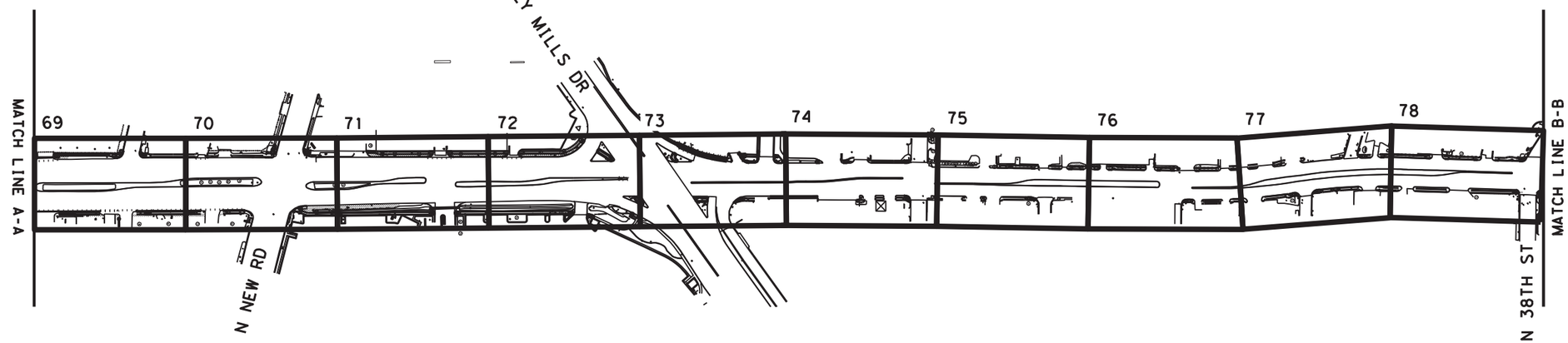

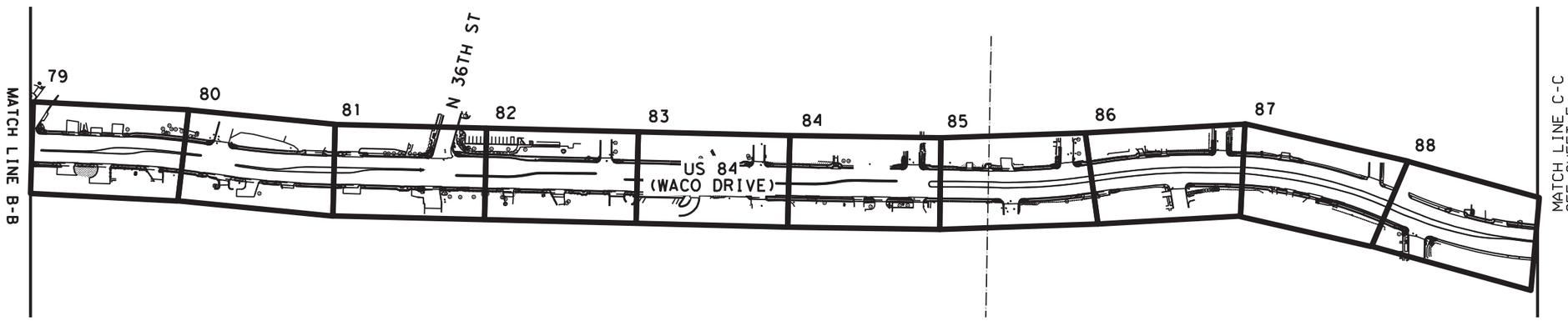

PROJECT: US84 RTZ

FROM: CENTERPOINT

TO: FM 933 (CLIFTON STREET)

CSJ: 0055-15-072

LEGEND

XX SIDEWALK LAYOUT SHEET NO.

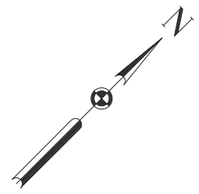

Scott R. Arnold, P.E.

12/21/2020

Kimley»Horn F-928

© 2021

Texas Department of Transportation

PROJECT LAYOUT

SHEET 1 OF 3

FED.RD. DIV.NO.	PROJECT ID.	HIGHWAY NO.
6	(SEE TITLE SHEET)	US 84

STATE	DIST.	COUNTY	SHEET NO.
TEXAS	WAC	MCLENNAN	4
CONT.	SECT.	JOB	
0055	15	072	

FILENAME: pw:\\kh-pw.bentley.com:kh-pw-01\Documents\01 Active Projects\TX-FTW-063586010 - US 84 (Waco Drive)\WAC 0055150724 - Design\Plan Set\1. General\US84_GEN_PL01.dgn
PLOTTED: 12/21/2020

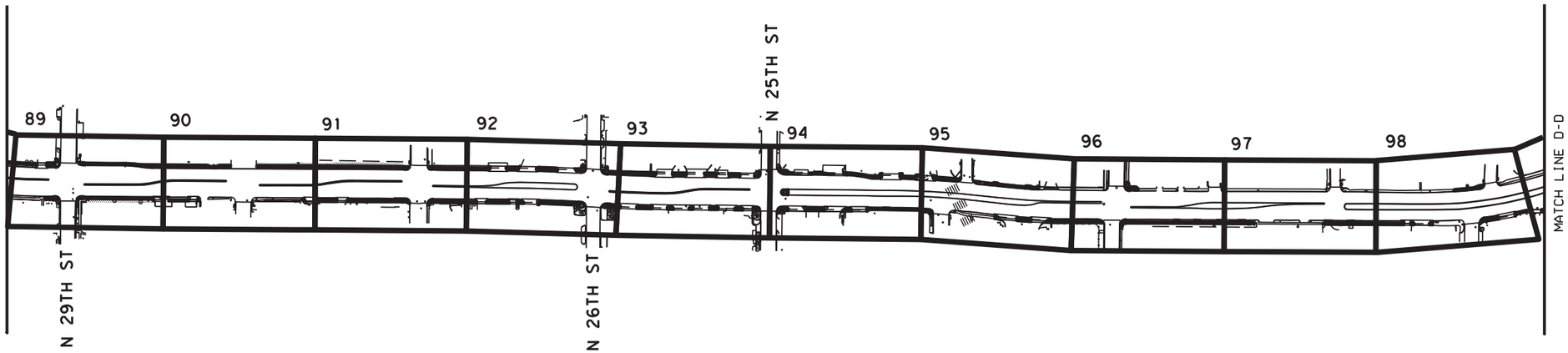

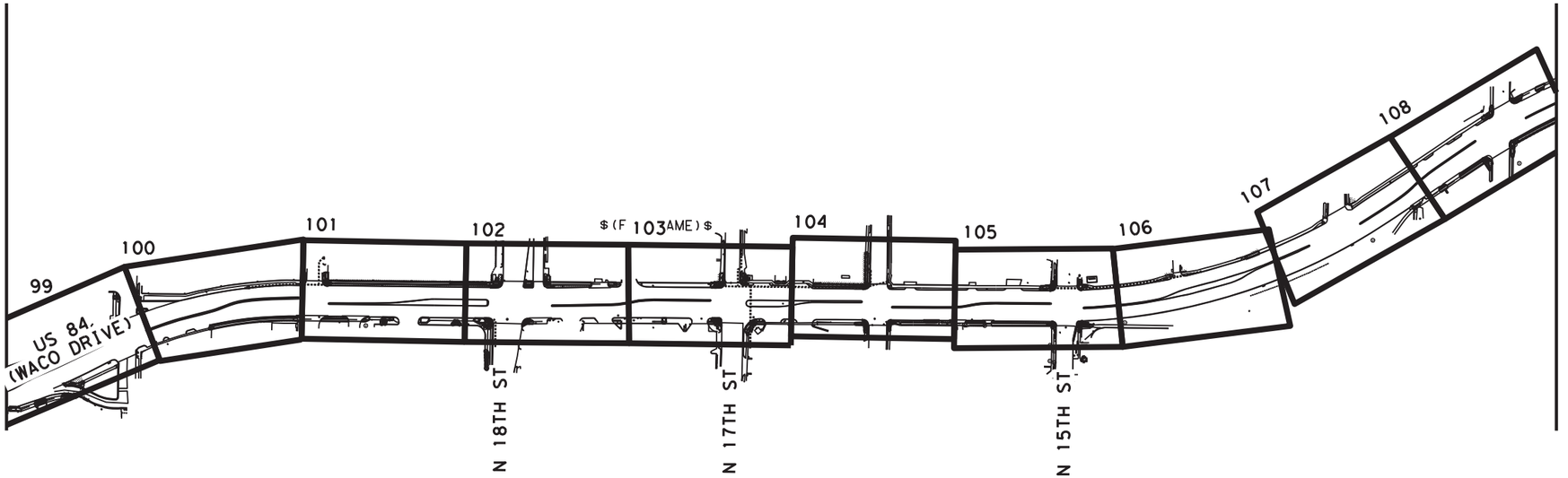

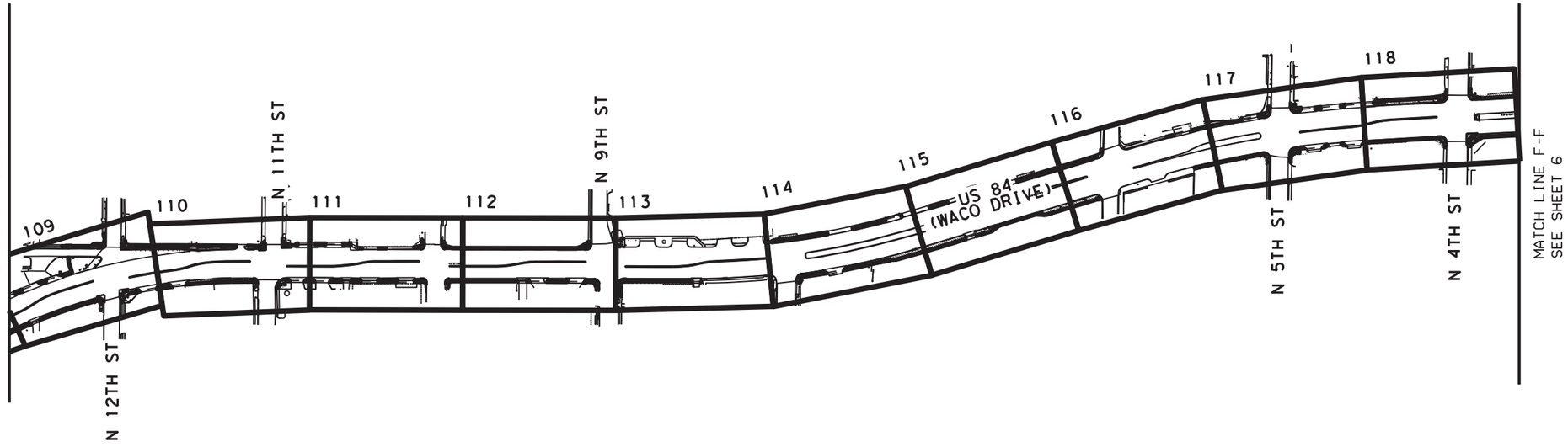

PROJECT: US84 RTZ

FROM: CENTERPOINT

TO: FM 933 (CLIFTON STREET)

CSJ: 0055-15-072

LEGEND

XX SIDEWALK LAYOUT SHEET NO.

Scott R. Arnold, P.E.

03/01/2021

Kimley»Horn F-928

© 2021

Texas Department of Transportation

PROJECT LAYOUT

SHEET 2 OF 3

FED.RD. DIV.NO.	PROJECT ID.	HIGHWAY NO.
6	(SEE TITLE SHEET)	US 84

STATE	DIST.	COUNTY	SHEET NO.
TEXAS	WAC	MCLENNAN	5
CONT.	SECT.	JOB	
0055	15	072	

FILENAME: pw:\\kh-pw.bentley.com:kh-pw-01\Documents\01 Active Projects\TX-FTW-063586010 - US 84 (Waco Drive)\WAC 0055150724 - Design\Plan Set\1. General\US84_GEN_PL02.dgn
PLOTTED: 12/21/2020

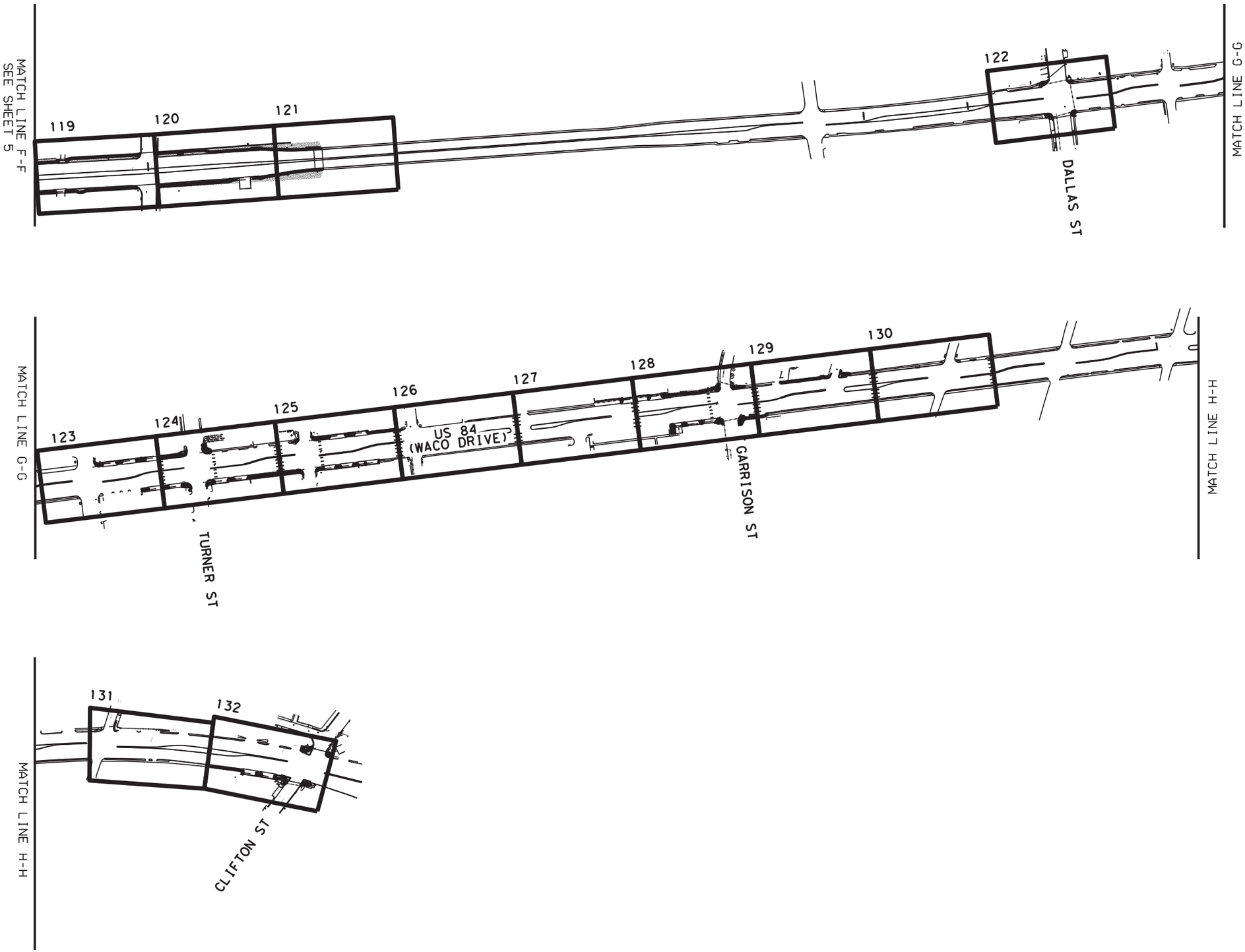

PROJECT: US84 RTZ

FROM: CENTERPOINT

TO: FM 933 (CLIFTON STREET)

CSJ: 0055-15-072

LEGEND

XX SIDEWALK LAYOUT SHEET NO.

0' 300' 600'

Scott R. Arnold, P.E.

03/01/2021

Kimley»Horn F-928

© 2021

Texas Department of Transportation

PROJECT LAYOUT

SHEET 3 OF 3

FED.RD. DIV.NO.	PROJECT ID.	HIGHWAY NO.
6	(SEE TITLE SHEET)	US 84

STATE	DIST.	COUNTY	SHEET NO.
TEXAS	WAC	MCLENNAN	6
CONT.	SECT.	JOB	
0055	15	072	

FILENAME: pw:\\kh-pw.bentley.com:kh-pw-01\Documents\01 Active Projects\TX-FTW-063586010 - US 84 (Waco Drive)\WAC 005515072\4 - Design\Plan Set\1. General\US84_GEN_PL03.dgn
PLOTTED: 12/21/2020

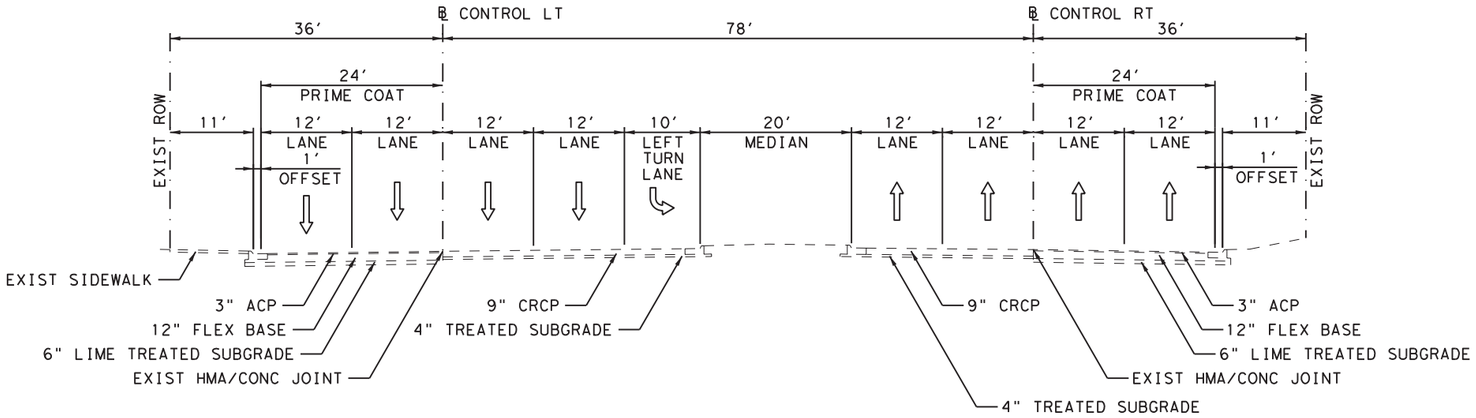

EXISTING TYPICAL SECTION

℄ CONTROL RT STA 100+49.85 TO STA 104+02.79
℄ CONTROL LT STA 100+49.85 TO STA 104+02.79

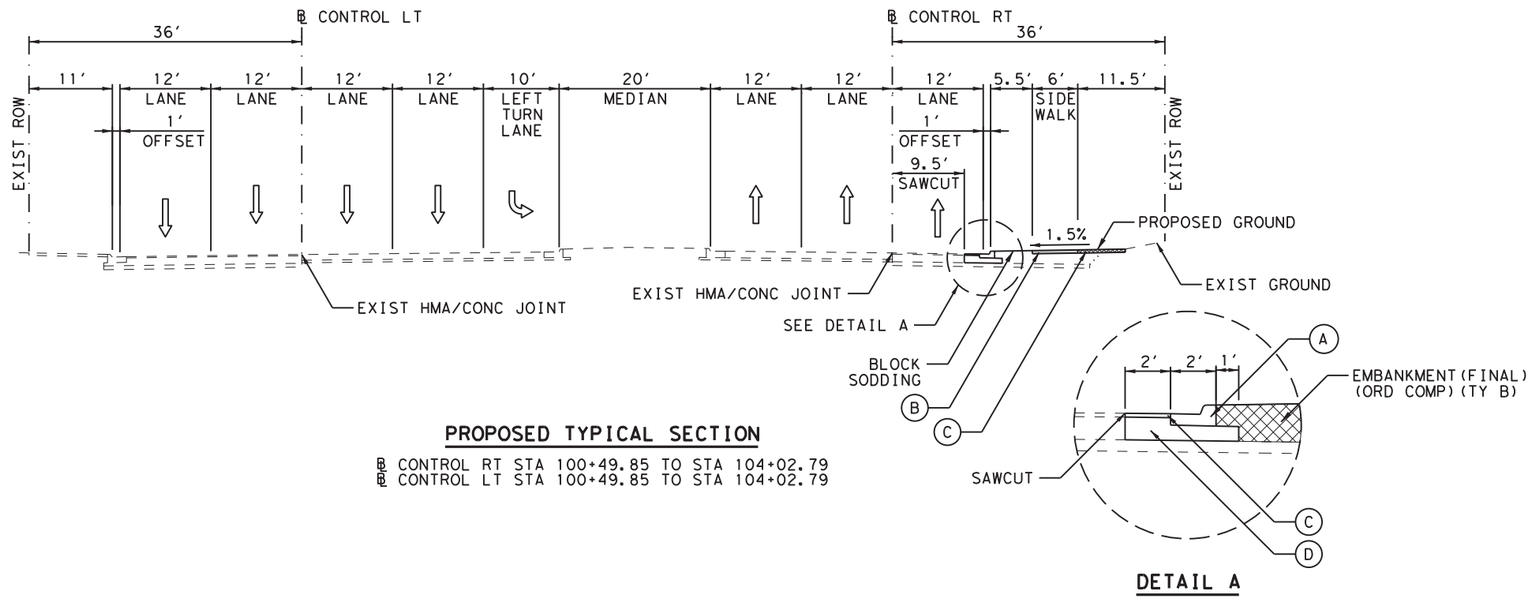

PROPOSED TYPICAL SECTION

℄ CONTROL RT STA 100+49.85 TO STA 104+02.79
℄ CONTROL LT STA 100+49.85 TO STA 104+02.79

DETAIL A

LEGEND

- (A) TY II CURB & GUTTER
- (B) CONC SIDEWALKS (5")
- (C) 4" D-GR HMA(SQ) TY-C SAC-A PG70-22
- (D) 6" D-GR HMA(SQ) TY-B PG64-22

NOTES:

1. ALL DIMENSIONS ARE TO THE NOMINAL FACE OF CURB.
2. EXISTING PAVEMENT DEPTHS WERE TAKEN FROM AS-BUILT DRAWINGS.
3. REFER TO SIDEWALK LAYOUT SHEETS FOR ADDITIONAL INFORMATION.
4. THICKNESS ("T") OF GUTTER SHOULD BE 7". THICKNESS CAN BE ADJUSTED AS APPROVED BY THE ENGINEER. REFER TO TXDOT STANDARD CCCG-12 FOR ADDITIONAL INFORMATION.

12/21/2020

Kimley»Horn F-928

© 2021

Texas Department of Transportation

TYPICAL SECTIONS

SCALE: NTS SHEET 1 OF 1

FED. RD. DIV. NO.	PROJECT ID.	HIGHWAY NO.
6	(SEE TITLE SHEET)	US 84

STATE	DIST.	COUNTY	SHEET NO.
TEXAS	WAC	MCLENNAN	7
CONT.	SECT.	JOB	
0055	15	072	

FILENAME: pw:\\kh-pw.bentley.com:kh-pw-01\Documents\01 Active Projects\TX-FTW-063586010 - US 84 (Waco Drive)\WAC 005515072\4 - Design\Plan Set\1. General\US84_GEN_TYP01.dgn
PLOTTED: 12/21/2020

BASIS OF ESTIMATE TABLES

Table 1: Basis of Estimate for Erosion Control Items				
Item	**Description**	**Rate**	**Basis**	**Quantities**
*166	FERTILIZER			
	FERTILIZER (20-10-10) (PERMANENT)	300 LBS / AC	2.35 AC	0.36 TON
168	VEGETATIVE WATERING			
	(1 APPLICATIONS - PERM)	13,100 GAL/AC/APP	2.35 AC	31.1 MG

* FOR CONTRACTOR'S INFORMATION ONLY

Table 2: Basis of Estimate for Base Work				
Item	**Description**	**Rate**	**Basis**	**Quantities**
247	FLEXIBLE BASE			
	(TY D GR 1-2)	138 LB/CF	371.25 CF	13.75 CY *25.6 TON

Table 3: Basis of Estimate for Asphalt Pavements				
Item	**Description**	**Rate**	**Basis**	**Quantities**
340	**DENSE-GRADED HOT MIX ASPHALT (SQ)**			
	TY-B PG 64-22	660 LB / SY	811 SY	268 TON
	TY-B PG 64-22	440 LB / SY	681 SY	150 TON
	TY-B PG 64-22	330 LB / SY	517 SY	86 TON
	TY-C SAC-A PG 64-22	550 LB / SY	1736 SY	478 TON
	TY-C SAC-A PG 64-22	440 LB / SY	811 SY	179 TON

GENERAL

The construction, operation and maintenance of the proposed project will be consistent with the state implementation plan as prepared by the Texas Commission on Environmental Quality.

The disturbed area for this project, as shown on the plans is 9.5 acres. However, the Total Disturbed Area (TDA) will establish the required authorization for storm water discharges. The TDA of this project will be determined by the sum of the disturbed area in all project locations in the contract, and all disturbed area on all Project-Specific Locations (PSL) located in the project limits and/or within 1 mile of the project limits. The department will obtain an authorization to discharge storm water from the Texas Commission on Environmental Quality (TCEQ) for the construction site as shown on the plans, according to the TDA of the project. The contractor will obtain any required authorization from the TCEQ for the discharge of storm water from any PSL for construction support activities on or off of the project row according to the TDA of the project. When the TDA for the project exceeds 1 acre, provide a copy of the appropriate application of permit (NOI, or Construction Site Notice) to the engineer, for any PSL located in the project limits or within 1 mile of the project limits. Follow the directives and adhere to all requirements set forth in the TCEQ, Texas Pollution Discharge Elimination System, Construction General Permit (TPDES, CGP).
Contractor questions on this project are to be emailed to the Waco District at the following address:

Bill Compton - Wacoprebid@txdot.gov, 254-867-2707, 100 S. Loop Dr., Waco, TX
Carmen Chau - Wacoprebid@txdot.gov, 254-867-2794, 100 S. Loop Dr., Waco, TX

Or Via phone or in person to the following individual(s):
Area Engineer's: Clayton Zacha, P.E., 254-772-2890
Assistant Area Engineer's: Jeff Jackson, P.E., 254-772-2890

All contractor questions will be reviewed by the Area Engineer or Assistant Area Engineer. Once a response is developed, it will be posted to TxDOT's Public FTP at the following Address:
https://ftp.dot.state.tx.us/pub/txdot-info/Pre-Letting Responses/

All questions submitted that generate a response will be posted through this site. The site is organized by District, Project Type (Construction or Maintenance), Letting Date, CCSJ/Project Name.

Paper copies of cross-sections may be produced by using the provided .pdf file located on the above FTP Website at the bidders' expense and at copying companies. This data is for non-construction purposes only and it is the responsibility of the prospective bidder to validate the enclosed data with appropriate plans, specifications and estimate for the project(s).

GENERAL NOTES

The following standard detail sheets have been modified:

RAC-R(MOD)
PW(MOD)

ITEM 5: CONTROL OF THE WORK

Submit all fabrication and shop drawings per TxDOT's online shop drawing submittal system and copy the Area Engineer on the email submittal, unless otherwise directed.

Underground utilities owned by the Texas Department of Transportation may be present within the Right-Of-Way on this project. For signal, illumination, surveillance, and communications & control maintained by TxDOT, call the TxDOT Traffic Signal Office (254)867-2808 for locates a minimum of 48 hours in advance of excavation. For irrigation systems, call TxDOT Landscape Office (254)867-2726 for locates a minimum of 48 hours in advance of excavation. If city or town owned irrigation facilities are present, call the appropriate department of the local city or town a minimum of 48 hours in advance of excavation. The Contractor is liable for all damages when utilities are damaged due to Contractor's negligence including, but not limited to, repair or replacement at the Contractor's expense.

When a precast or cast-in-place concrete element is included in the plans, a precast concrete alternate may be submitted in accordance with "Standard Operating Procedure for Alternate Precast Proposal Submission" found online at https://www.txdot.gov/inside-txdot/forms-publications/consultants-contractors/publications/bridge.html#design. Acceptance or denial of an alternate is at the sole discretion of the Engineer. Impacts to the project schedule and any additional costs resulting from the use of alternates are the sole responsibility of the Contractor.

ITEM 6: CONTROL OF MATERIALS

References to manufacturer's trade name or catalog numbers are for the purpose of identification only and the contractor will be permitted to furnish like materials of other manufacturers provided they are of equal quality and comply with specifications for this project.

ITEM 7: LEGAL RELATIONS AND RESPONSIBILITIES

No significant traffic generator events identified.

If utilizing private property for waste disposal sites, field office sites, equipment storage sites or for any other purpose involved with this project, provide to the Engineer written proof of the property owner's approval of the use of this property. This proof may be in the form of a letter or agreement signed by the property owner or other documents acceptable to the Engineer.

Personal vehicles of the contractor's employees will not be parked within the right of way at any time including any section closed to public traffic, unless the vehicle is being utilized for construction procedures. However, the contractor's employees may park on the right of way at the sites where the contractor has his office, equipment and materials storage yard.

The contractor is alerted to the possible presence of swallows under the existing bridges or culverts. Because the migratory bird treaty act prohibits harm to swallows, their eggs or their nestlings, the contractor will not begin potentially disturbing activities on or near the bridge until the birds have abandoned any occupied nests (approximately September 1). Active nests may not be removed regardless of the date.

Prior to the swallows returning to the nests (approximately March 1), abandoned nests will be removed from the bridge. The contractor will prevent the establishment of new nests on any portion of the structure. Methods for preventing the establishment of new nests must be approved by the project Engineer. Examples of acceptable nest prevention methods are bird-deterrent netting and bird-repelling sprays and/or gels to be applied to the structure. This work will not be paid for directly, but will be subsidiary to the various bid items.

The Contractor will submit detailed site-specific plans for work in each "water of the United States" designated on the EPIC sheet. These plans must be approved by the TxDOT Engineer prior to starting any work in these areas. The plans must also describe facilities and work activities adjacent the Ordinary High-Water Marks. The plan must show actual dimensions and materials for:

- Proposed construction roads and work areas leading to or in close proximity to the Ordinary High-Water Marks
- Temporary material or equipment storage areas in close proximity to the Ordinary High-Water Marks
- Locations of proposed sediment and erosion control devices
- Identification of construction equipment and construction techniques to accomplish the work

Once this drawing and supporting information is reviewed and approved by TxDOT, all construction workers should be made aware of the limits designated on the drawings by the Contractor's supervision. Work in all waters of the US will be limited to the minimum necessary required to construct the bridge, culvert or roadway fills. Work will also include all activities needed for bridge and culvert demolitions. Working or disturbing soil in the stream channel outside the limits of the work plan will not be allowed. Orange fencing will be provided and maintained to establish the TxDOT approved boundaries in which work may be conducted between the Ordinary High-Water Marks. Orange fencing will not be paid for but will be considered subsidiary to Item 502, "Barricades, Signs and Traffic Handling".

ITEM 8: PROSECUTION AND PROGRESS

This Project will be a Standard Workweek in accordance with Article 8.3.1.4.

Meet bi-weekly or at intervals as agreed upon with the engineer to notify him or her of planned work for the upcoming 3-week period.

For this project, provide a Bar Chart progress schedule.

ITEM 100: PREPARING RIGHT OF WAY

The limits of preparing right of way will be measured as shown on the sidewalk layout sheets.

Remove the existing roadway delineators and object markers as shown on the plans, or as directed, during construction within the right of way. Delineator and object marker removals are subsidiary to this Item.

The limits of preparing right of way (hand clearing) will be measured as shown on the sidewalk layout sheets. Preparing right of way (hand clearing) is only intended for tree trimming and removal of vegetation and debris from sidewalk and ramps as specified in the plans. Additional locations, that are not specified in the plans in which the contractor expects compensation, will require prior approval from the Engineer.

ITEM 104: REMOVING CONCRETE

In those areas where the pavement is not to be overlaid, provide a smooth surface after the curb removal. Planning or grinding is considered an acceptable method at these locations. Measurement and payment is in accordance with this item.

ITEM 105: REMOVING TREATED AND UNTREATED BASE AND ASPHALT PAVEMENT

Saw existing asphalt along neat lines where portions are to be left in place temporarily or permanently. Sawing is not paid for directly, but is subsidiary to this item.

Properly dispose of unsalvageable material at Contractor's expense.

Remove the loose material from the roadway before opening to traffic.

ITEM 110: EXCAVATION

In a cut section, when soils are encountered at subgrade depths that are unstable and are deemed unsuitable by the Engineer, undercut this material for a minimum depth of one (1.0) foot below the maximum depth as determined and replace with a material having a plasticity index less than 25 and a liquid limit of less than 50.

ITEMS 110 & 132: EXCAVATION & EMBANKMENT

Excavation and embankment for driveways, sleeper slabs, alleys and intersections will not be paid for directly, but will be considered subsidiary to these items.

In those cases where fixed features require, the governing slopes indicated herein and on the cross sections may be varied between the limits and to the extent determined.

ITEM 162: SODDING FOR EROSION CONTROL

Block sod (Bermuda grass) will be cynodon dactylon Bermuda grass cut to a minimum depth (thickness) of one (1) inch. The sod will have the following characteristics: (1) uniformity; (2) good color; (3) free of weeds, weed seed, insects, and disease; (4) healthy, virile root system of dense, thickly matted roots throughout the soil of the sod; (5) adequate moisture to prevent drying out by exposure to the air and sun to the extent as to damage sod.

Prior to laying the block sod, blade the area and rake smooth. Refer to the plans and details for areas to receive the sod. Remove one (1) in. of soil along paved edges and curb lines before laying sod and dress the slope to match all exposed edges after placing the sod.

ITEM 247: FLEXIBLE BASE

Construct uniform layer thickness of 6 inches, or less with the required density and moisture content.

Minimum PI is equal to three (3) for all grades, or a minimum Bar Linear Shrinkage of 2%.
RAP may not be incorporated into Flexbase Material

ITEMS 340: DENSE-GRADED HOT-MIX ASPHALT (SQ)

Design for a target Laboratory-molded density of 97.0% when using the Texas Gyratory Compactor (TGC) (Tex-204-F, Part I).

Use aggregate that meets the Surface Aggregate Classification (SAC) requirement of Class A.

Maximum stripping of 0% is required.

ITEM 360: CONCRETE PAVEMENT

Use of multiple piece tie bars will be required in any areas where adjacent base construction will be completed in a separate phase exposing tie bars to potential damage during base construction. Provide chairs for multiple piece tie bars, threaded connectors or other adequate devices, used in concrete paving, or tie them to the pavement reinforcing steel.

Insertion of tie bars into plastic concrete will be allowed as part of slip form paving operation via methods approved by the Engineer.

If approved by the engineer for specific areas, in lieu of multiple piece tie bars, drill holes into the pavement and grout straight tie bars in place with epoxy. Use a non-impact, rotary core drill to prevent damage to the pavement unless otherwise directed. Clean the drill holes and then completely fill with epoxy before inserting the tie bar. Impact rotary gang drills may be used at the discretion of the Engineer if it can be demonstrated to not have an adverse impact on the final product.

Do not bend the tie bars.

Provide curbs monolithically constructed with the concrete pavement. If continuous monolithic curb has to be temporarily omitted for any reason, provide dowelled curbs in the proposed areas, as detailed in the plans, and apply an approved epoxy resin to the pavement to receive the curb as directed. This work and materials will not be paid for directly, but is considered subsidiary to this item.

Provide pavement widening joints, as detailed in the plans, at all locations where concrete pavement is placed adjacent to existing concrete pavement. Installation of these joints is not paid for directly, but is considered subsidiary to this item.

Pavement leave-outs are required on this project as necessary to provide for traffic at driveways and side streets as shown in the plans. The cost of providing these leave-outs, including the construction of a suitable crossover connection at each site, will not paid for directly but will be considered subsidiary to this Item.

Payment for furnishing and installing the pre-molded expansion joint material between the retaining walls and concrete pavement is not paid for directly, but is considered subsidiary to this item.
Curb transition is paid for as Type II curb.

The installation of curb openings is not paid for directly, but is considered subsidiary to this item.

Place construction, sawed and contraction joints in accordance with the pavement detail sheet and as directed. Joint locations, other than as shown on the plans, are subject to approval.
Use "mechanical steel placing equipment" at the discretion of the engineer.

If more than 30% of an area in any 1000-Ft section of roadway requires grinding, action will be taken by the Contractor to make that 1000-Ft full width section uniform without changing ride quality, compromising quality of pavement and decreasing skid resistance. Approved blasting method or other method approved by the Engineer will be performed at the Contractor's expense.

ITEM 400: EXCAVATION AND BACKFILL OF STRUCTURES

When placing concrete storm drain pipe on slopes of greater than 10 percent, provide cement stabilized backfill to a depth shown on the plans.

Aggregate for cement stabilized backfill will be coarse aggregates, GRADE 3, 4 or 5 and fine aggregate, as shown in Item 421, "Hydraulic Cement Concrete". The ratio of course aggregate to sand should not contain more than sixty percent (60%) sand unless otherwise approved.

CLASS B bedding is required if rock is encountered.

ITEM 420 CONCRETE SUBSTRUCTURES

Apply an ordinary surface finish to all concrete surfaces within 30 days after form removal.

NATIONAL BRIDGE INVENTORY NUMBERS:
Provide National Bridge Inventory (NBI) numbers on all bridge structures and bridge class culverts.

For Bridge Class Culverts, place National Bridge Inventory numbers at the middle of the downstream headwall using 3" block letters.

For all conditions, use appropriate die cut stencils and black paint for placement. All materials, labor and incidentals associated with placing NBI numbers are subsidiary to the various bid items.

Reduce headwall heights, if necessary, to provide a maximum of three (3) inches projection above the roadway slope. No increase or decrease will be made in plan quantities of concrete or reinforcing steel for this work.

ITEM 421: HYDRAULIC CEMENT CONCRETE

Furnish mix designs to the Engineer in a format compatible to the latest version of the Department's Construction Management System (Site Manager). Mix Design templates will be provided by the Engineer.

Provide sulfate resistant concrete for box culverts and all drilled shafts.

Supply the Engineer with a list of certified personnel and copies of their current ACI certificates before beginning production and when personnel changes are made. Supply hard copies of calibration reports for testing equipment when required by the Engineer.

ITEM 423: RETAINING WALLS:

For concrete block retaining walls, provide a system from one of the following approved suppliers:

Allan Block Retaining Walls	*Jewell Concrete 400 Jewell Drive Waco, TX 76712*	*(254) 772-3440*
Amastone Earth Retention Systems	*Geowestern, Inc. P.O. Box 620776 Littleton, CO 80162*	*(303) 921-7881*
Anchor Wall System (Diamond, Diamond Pro, Diamond Pro PS, Vertika, Vertika Pro)	*Jewell Concrete Products, Inc 2561 Southwest Grapevine Parkway, #200 Grapevine, TX 75061*	*(817) 235-2914*
Cornerstone Retaining Walls	*Cornerstone Wall Solutions Inc. 803-1625 Manitoba Street Vancouver, BC, Canada, V5Y0B8*	*(800) 939-9193*
Keystone Hardscapes (Regal Stone, Regal Stone Pro, Valera, Valera Pro, Compac III, Standard III, KeySystem I)	*Pavestone Company P.O. Box 1868 Grapevine, TX 76051*	*(817) 481-5802*
Magnumstone Retaining Wall System	*Cornerstone Wall Solutions Inc. 803-1625 Manitoba Street*	*(800) 939-9193*

	Vancouver, BC, Canada, V5Y0B8	
Mesa Retaining Wall System	*Tensar International Corporation 2500 Northwinds Parkway, Suite 500 Alpharetta, GA 30009*	*(770) 344-2090*
Omega Walls	*ROSCH Earth Technologies 18390 Wings Corporate Drive Chesterfield, MO 63005*	*(636) 519-7770*
Pyramid Blockwalls	*The Reinforced Earth Company 1331 Airport Freeway, Suite 302 Euless, TX 76040-4150*	*(817) 283-5503*
Redi-Rock Retaining Walls	*Redi-Rock International, LLC 05481 US 31 S. Charlevoix, MI 49720*	*(866) 222-8400*
Stone Strong Systems	*Stone Strong, LLC 13460 Chandler Road, Suite 100 Omaha, NE 68138*	*(877) 501-5652*
Trinity Wall System	*EARTH WALL PRODUCTS, LLC 1349 Old 41 Hwy, Suite 135 Marietta, GA 30064*	*(770) 378-5012*
Versa-Lok Retaining Walls	*Best Block 2202 Chockhill Road Dallas, TX 75212*	*(972) 263-5077*

All retaining walls will have a uniform texture and appearance.

Unless otherwise noted in the plans, the top of the leveling pad is located 2 feet below the proposed ground.

Unless otherwise shown on the plans, provide Type AS backfill as defined under this item for permanent MSE or concrete block (CB) walls not subject to inundation. Unless otherwise shown on the plans, provide type DS backfill as defined under this item for permanent MSE or CB walls subject to inundation.

Supply drainage aggregate meeting the requirements of this item for use as filter material with the retaining wall.

Cement-Stabilized Backfill (CSB) is not permitted.

Unless otherwise noted on the plans, provide flowable backfill meeting the requirements of Item 401 between the back of panels and inlets or drainage pipes where the required compaction cannot be achieved. Flowable backfill used for this purpose is subsidiary to this item.

Submit design calculations supporting the details necessary to incorporate coping, railing, inlets, drainage, electrical conduits and any additional necessary features.

The contractor has the option of constructing any of the types of retaining walls for which details and specifications are included in the plans. Footing adjustments made to accommodate the available optional retaining walls are not measured. Regardless of option or options chosen, use the same fascia pattern throughout the entire project, including cast in place full height retaining walls or retaining wall type abutments.

Submit detailed drawings depicting the patterns and matching of precast with cast-in-place for approval.

ITEM 440: REINFORCEMENT FOR CONCRETE:

All ties, chairs and other appurtenances used with epoxy coated reinforcing shall be epoxy coated or non-metallic.

ITEMS 450: RAILING

Blast clean all railing installed as part of the project in accordance with Item 427, “Surface Finishes for Concrete”, prior to final acceptance of the project. This work will be considered subsidiary to Items 450, “Railing” and Item 514, “Permanent Concrete Traffic Barrier”.

ITEM 451: RETROFIT RAILING

Refinish the outside face of the concrete slabs and curbs on the underpasses where railing is removed in such a manner as to leave a neat surface. Grind existing anchor bolts flush with the concrete. Paint the ends of the anchor bolts with two coats of zinc dust-zinc rich oxide paint as described under Item 450, “Railing”. This work will not be paid for directly, but will be subsidiary to Item 451, “Retrofit Railing”.

ITEM 462: CONCRETE BOX CULVERTS AND DRAINS

Joints between pre-cast concrete box culverts will be pre-formed flexible joint sealants as described in Section 464.3.3, “Jointing”.

For this contract, the contractor may use either pre-cast or cast in place culvert construction.

Reshape embankment side slopes, provide embankment as required, and add topsoil to achieve a smooth uniform finish around the installation of the safety end treatments and culvert extensions as directed. Finishing and reshaping work will be subsidiary to Items 132, “Embankment”, Item 162, “Sodding for Erosion Control”, and Item 467, “Safety End Treatment”.

Provide and install pneumatically placed concrete on the ditch bottom and side slopes between temporary terminations between old and new culverts. Pneumatically placed concrete will be placed to the height of the largest culvert on the ditch side slopes; and to a limit 10 feet outside the location of BMPs along the ditch bottom. Cement stabilized sand may be substituted for pneumatically placed concrete, with Engineer approval.

ITEM 464: REINFORCED CONCRETE PIPE

The concrete collars and the connections of pipes to existing or proposed concrete boxes or pipe will not be paid for directly but will be considered subsidiary to the various bid items.

At locations where storm drains dead-end, plug with a concrete plug of a thickness equal to 1 ½ inches per foot of diameter of pipe with a minimum thickness of 3 inches. The cost of the plugs shall be included in the unit price bid per foot of the various storm drain pipes.

ITEM 471: FRAMES, GRATES, RINGS AND COVERS

For typical applications, supply un-painted cast iron inlet grate and frame and/or cast iron manhole frame and cover in areas subject to traffic loading, provide heavy steel manhole covers or greats and associated steel frame. Tack weld steel inlet grates and manhole covers to steel frames.

ITEM 479: ADJUSTING MANHOLES AND INLETS

Accept ownership of inlet grates and manhole covers and properly dispose of them outside the limits of the right of way in accordance with federal, state and local regulations.

Submit a plan detailing proposed methods of handling phased construction at manholes and water valves.

Payment for the phase construction will be considered subsidiary to this item.

ITEM 496: REMOVING STRUCTURES

Concrete pavement removed as a result of removing the inlets will not be paid for directly but will be considered as subsidiary to Item 496.

Inlet grates and manhole covers become the property of the contractor for disposal.

ITEM 500: MOBILIZATION

Material On Hand (MOH) will not be used in calculating partial payments for Mobilization.

ITEM 502: BARRICADES, SIGNS, AND TRAFFIC HANDLING

The Contractor Force Account “Safety Contingency” that has been established for this project is intended to be utilized for work zone enhancements, to improve the effectiveness of the Traffic Control Plan, that could not be foreseen in the project planning and design stage. These enhancements will be mutually agreed upon by the Engineer and the Contractor’s Responsible Person based on weekly or more frequent traffic management reviews on the project. The Engineer may choose to use existing bid items if it does not slow the implementation of enhancement.

Access will be provided to all business and residences at all times. Where turning radii are limited during phased construction at intersections, provide all weather surfaces such as RAP or base in turning movements to accommodate and to protect the traffic from edge drop-offs. Materials, labor, maintenance and removal for these temporary accesses and radii will not be paid for directly but will be considered subsidiary to the various bid items.

A meeting between the contractor and Engineer to discuss upcoming changes in construction phasing and traffic switches is required at least fourteen (14) days prior to the phase change. Items to be discussed at this meeting include temporary signing, traffic control, pavement markings, the processes necessary for the phase change and subcontractor scheduling.

Provide written proposed lane closure information by 1:00 pm on the business day prior to the proposed closures. Do not close lanes when this requirement is not met.

When excavation is required next to a pavement lane carrying traffic and the widening is not completed by the end of the work day, backfill against the edge of the pavement with at least a 3:1 slope using an acceptable material to support vehicular traffic. Carefully remove and dispose of this material when work resumes. Backfilling pavement edges, and the materials required for the work will be subsidiary to this item.

Place barricades and signs in locations that do not obstruct the sight distance of drivers entering the highway from driveways or side streets.

Provide rectangular shape (CW12-2P) Temporary Clearance Signs on all bridges where the existing vertical clearance has changed. Install Signs to the satisfaction of the Engineer prior to opening to traffic. Plywood sign blanks will have minimum dimensions of 84" X 12". Work performed and materials are subsidiary to this item.

The Contractor Responsible Person(s) (CRP) for Work Zone Traffic Controls will inspect and ensure any deficiencies are corrected each and every day throughout the duration of this contract.

Any misaligned or damaged traffic control devices will be repaired as soon as practical after deficiency is discovered.

In addition to providing a Contractor's Responsible Person and a phone number for emergency contact, have an employee(s) available to respond on the project for emergencies and for taking corrective measures within One (1) Hour.

At locations where new traffic signals are being installed and no existing traffic signals are in place, install temporary "SIGNAL AHEAD" signs (W3-3, 36X36). Place the signs when the new signal is turned on flash mode and remain until the barricades are removed or as approved. Payment for the supply and installation of the temporary signs will be subsidiary to Item 502, "Barricades, Signs and Traffic Handling".

Limit lane closures along US 84 (Waco Drive) to the hours between 9:00 am and 3:30 pm. Work in other areas of the project is not restricted to this time frame.

ITEM 506: TEMPROARY EROSION, SEDIMENTATION AND ENVIRONMENTAL CONTROLS

Take all practicable precautions to prevent debris from being discharged into the Waters of Texas or a designated wetland. Install Best Management Practices before demolition begins and maintain them during the demolition. Remove any debris or construction material that escapes containment devices and are discharged into the restricted areas, before the next rain event or within 24 hours of the discharge.

If temporary construction stream crossings are allowed under a Nationwide Permit, submit in writing for approval the type and location of each temporary stream crossing. Use temporary bridges, timber mats, or other structurally sound and non-eroding material for temporary stream crossings. A temporary culvert crossing will consist of storm sewer pipes and 4- to 8-inch nominal size rock. Temporary stream crossings must not cause more than minimal changes to the hydraulic flow characteristics of the stream, increase flooding, or cause more than minimal degradation of water quality. Remove the temporary stream crossings in their entirety and return the affected areas to their pre-existing elevation. All work and materials use for temporary construction stream crossings will not be paid for directly but are subsidiary to pertinent Items.

Provide SW3P Signs. Obtain from the Engineer a copy of the project's completed TPDES Storm Water Program Construction Site Notice and Contractor Site Notice. Laminate the sheets and bond with adhesive to 36" X 36" plywood sign blanks. Ensure the sheets remain dry. Apply Type C Blue reflective sheeting as the background and add the text "SW3P" in 5" white lettering, centered at the top. Attach the signs to approved temporary mounts and locate at each of the project limits just inside the right of way line at a readable height or as directed by the Engineer. If the sign cannot be placed outside the clear zone, it must adhere to the TMUTCD. SW3P signs, maintenance, and reposting (for replacement or as needed to ensure readability) will be subsidiary to Item 502.

Leave all right of way areas undisturbed until actual construction is to be performed in said areas.

No soil disturbing activities will begin on any section of TxDOT ROW without adequate sedimentation controls first being installed and functioning at adjacent drainage outfalls. Begin and continuously prosecute the repairs, additions and maintenance of erosion and sedimentation control devices within seven days after the Contractor receives each Form 2118, Field Inspection and Maintenance Report, from the Engineer. Failure of the Contractor to fulfill either of the above requirements places TxDOT in potential non-compliance with permit requirements and may result in withholding estimates or stopping work or both until all environmental permit requirements are fulfilled.

Concrete Washouts are required per the CGP. The Concrete Washout Area(s) structural controls must consist of temporary berms, temporary shallow pits, and/or temporary storage tanks to prevent contaminated runoff and must be lined as to prevent contamination of underlying soil. Ensure pits properly maintained including removal of concrete as not to allow over flow. The location(s) of washout area will be approved by the Engineer. When washout pits are no longer needed, they will be removed and area will be restored to original condition. This work, materials and labor will not be measured or paid for directly but will be subsidiary to Item 506, "Temporary Erosion, Sedimentation, and Environmental Controls."

Cleaning and sweeping of open roadways due to material spillage or loss from Contractor equipment or tires will be the responsibility of the Contractor at no cost to TxDOT. This work will not be charged as Item 738, "Cleaning and Sweeping Highways". Cleaning and sweeping of roadways will be completed as directed, including multiple times per day if necessary, to maintain acceptable roadways for the traveling public and to meet environmental regulations. Construction activities will cease when material deposited on the roadway is not properly removed or when equipment is not available as needed. Adequate construction exits will be planned, constructed and maintained by the Contractor per Item 506, "Temporary Erosion, Sedimentation, and Environmental Controls".

ITEM 512: PORTABLE TRAFFIC BARRIER

For designated source portable barrier, the Department will provide the connection hardware. Should adequate hardware not be available, the Contractor will acquire the hardware, provide to the Department and be reimbursed via force account.
Upon completion of the project, all barrier will remain property of the Department and stockpiled at a TxDOT yard near the project location or other locations within fifty (50) miles of the project as directed. The Contractor will furnish equipment necessary to load and unload the units at the stockpile locations. When stockpiling, separate damaged barriers from salvaged barriers as directed.

Stockpiling of portable concrete traffic barriers will not be permitted to be stockpiled (stacked) more than three (3) barriers high in any direction.

Portable concrete traffic barrier that is determined unusable will become property of contractor and will not be returned to TxDOT stockpile location. This work will be considered subsidiary to this item.

All hardware will become the property of the Department and will be returned to the TxDOT Maintenance yard within fifty (50) miles of the project as directed. Place hardware in fifty-five (55) gallon barrels with holes in bottom to allow drainage.

ITEM 528: COLORED TEXTURED CONCRETE AND LANDSCAPE PAVERS

In addition to the TxDOT engineer, the City of Waco must also approve the pattern and colorants used for colored textured concrete. Contact the City of Waco Public Works Department at 254-750-5674.

ITEM 529: CONCRETE CURB, GUTTER, AND COMBINED CURB AND GUTTER

Attach machine laid curb to pavement with a two-compound epoxy adhesive. Epoxy will be applied to that area of pavement under the machine laid curb and must be a minimum of six (6) inches in width and 0.2 inches (20 mils) thick. The epoxy will be applied uniformly by an approved method.

Provide grooved joints at 10-foot intervals and ¾ inch expansion joint material for doweled curb at the same locations as on the existing pavement.

For Curb and Gutter sections, provide grooved joints at 10-foot intervals and ¾ inch expansion joint material at a maximum of 50-foot centers and at all radius points and inlets.

Curb and Gutter transitions will be paid for by the foot at the unit price for the corresponding curb or curb and gutter section.

Saw joints at the same location as on the existing pavement.

ITEM 530: INTERSECTIONS, DRIVEWAYS AND TURNOUTS:

Provide Class “HES” concrete for concrete intersections and driveways listed or shown on the plans.

ITEM 531: SIDEWALKS

Sidewalk wall along ramps and landings, unless otherwise shown on the plans, is not paid for directly but is subsidiary to the ramp or landing. If the wall extends above the plane of the ramp, retaining wall should be utilized.

Areas labeled with a “T” on the construction drawings allow the contractor to transition to existing conditions. Slope and grade of all transitions must be approved by the engineer.

In areas where proposed sidewalk is located within existing HMA pavement, removal and disposal of this HMA pavement will not be paid for directly, but will be considered subsidiary to Item 531, "Sidewalks".

ITEM 536: CONCRETE MEDIANS AND DIRECTIONAL ISLANDS

Use Class “B” concrete for concrete medians and directional islands, unless otherwise noted on specific plan sheets

ITEM 618: CONDUIT

The locations of conduit as shown are for diagrammatic purposes only and may be varied to meet local conditions, subject to approval.

When backfilling bore pits, ensure that the conduit does not become damaged during installation or due to any settling of the backfill material. Compact select backfill in three equal lifts to the bottom of the conduit or if sand is used, place to a point two (2) inches above the conduit. Backfill density will be equal to the existing soil. Be careful to prevent any material from entering the conduit.

Backfill all open trenches before the end of the workday and do not leave any trench open overnight.

The conduit between pedestal service and service point shall be schedule 80 PVC.

The Contractor shall replace areas within temporary right of entries for the bore pit areas to equal or better condition. The cost to remove and replace pavement structure, sod, riprap, curbs, landscaping, irrigation, or other surface shall be considered subsidiary to the various Item 618 bid items.

ITEM 620: ELECTRIAL CONDUCTORS

Place the communications and/or coaxial cables in a separate conduit from the 120 or 240-volt electrical conductors.

Any damage to any wire or any cable is cause for immediate rejection of the entire cable being tested. Remove and replace the entire cable at the Contractor’s expense.

For both transformer and shoe-base type illumination poles, provide double-pole breakaway fuse holder from manufacturers pre-qualified by the Traffic Operations Division.

Provide ten (10) amp time delay fuses.

ITEM 624: GROUND BOXES

Ground box locations shown on the plans are approximate locations. Actual locations are as directed.

ITEM 628: ELECTRICAL SERVICES

Contact the Electric Utility Company to make all necessary arrangements to provide electrical service shown on the plans in accordance with Article 628.5 and the Electrical Details, except that TxDOT will make application to the Electric Utility Company for service (See note below).

> NOTE:
> Before fabricating the electrical service, contact the Waco District Traffic Signal Service Supervisor (Phone (254) 867-2807), to make application (billing arrangements) for service with the Electric Utility Company.

Furnish and install a lock on all electrical services. The lock is to be a Master-Lock number 2195.

The proposed electrical service location will be approved by TxDOT/CITY prior to installation. Contractor shall coordinate with Oncor for service tie-in: Cameron Anderson, (254) 750-5264 (office), (254) 495-7173 (cell), or Cameron.Anderson@oncor.com.

ITEM 644: SMALL ROADSIDE SIGN ASSEMBLIES

Bolt Clamp type will be used on Texas Triangular Slip Base System.

As practical with new construction, leave the existing sign assemblies in place until the proposed foundation, post and sign are installed, and then remove the old sign assemblies.

Do not leave any sign foundation holes open overnight. Ensure all holes drilled are at least the minimum required depth with no loose material remaining in the hole.

Stake proposed sign locations and receive approval before installation of sign foundations.

Existing Mile Markers Signs are to be relocated to their original location(s) as they were prior to the beginning of the project.

Expanded foam foundations are not permitted.

Cut the bottom of all posts square.

For sign types which design details are not shown on these plans, fabricate according to the “STANDARD HIGHWAY SIGN DESIGNS FOR TEXAS”.

Removed material that is deemed salvageable (signs and posts) will be the property of TxDOT. Deliver salvageable material to the TxDOT Maintenance Office. Remove unsalvageable material.

The Contractor will relocate the existing double sided street name signs and furnish the post mounted brackets for the street name signs to be paid for as part of the proposed Stop Signs (R1-1). Existing street name signs will be mounted above Stop signs. If damaged while being relocated, the Contractor will furnish new double sided street name signs at their own expense.

ITEM 656: FOUNDATIONS FOR TRAFFIC CONTROL DEVICES

Locations shown on the plans are for diagrammatic purposes only and may be varied to meet local conditions, subject to approval. Stake these locations and have them approved before installation of foundations.

Consult with the Engineer to ensure proper location and orientation of the signal controller before construction. The cabinet door shall open such that a signal technician will be facing US 84 when looking inside the cabinet.

Backfill all open foundation holes before the end of the workday and do not leave any holes open overnight.

Clean up and remove from all work areas all loose material resulting from contract operations each day before suspending work for the day.

ITEM 666: RETROREFLECTORIZED PAVEMENT MARKINGS

The Contractor will layout the proposed striping in accordance with TxDOT Traffic Control Plan Standards and latest version Texas Manual on Uniform Traffic Control Devices (TMUTCD) and project striping layout sheets. The Engineer will verify proposed striping layout prior to the beginning of striping operations.

The Contractor will locate the beginning and ending points of No Pass Zones.

ITEM 668: PREFABRICATED PAVEMENT MARKINGS

Use Type C prefabricated pavement markings.

ITEM 672: RAISED PAVEMENT MARKERS

Existing raised pavement markers to be replaced will be removed at the same time that the new markers are placed (i.e. remove and replace in one operation). Existing raised pavement markers replaced by new markers will be removed in accordance with Item 677, “Eliminating Existing Pavement Markings and Markers”. Immediately fill the damaged area in the pavement due to the removal of existing markers with an approved bituminous material. This removal and backfill work will not be paid for directly, but will be subsidiary to Item 672, "Raised Pavement Markers".

ITEM 677: ELIMINATING EXISTING PAVEMENT MARKINGS AND MARKERS

Water blasting method will be used on all final pavement surfaces for removal of temporary or permanent pavement markings.

The following are considered acceptable Pavement Marking Removal methods on this project for non-final pavement surfaces:

Provide 2’ wide strip seals
Water blasting

Mechanical Method

All concrete surfaces to receive a painting system will be water blasted prior to application of the paint/sealer. Water blasting equipment used will be capable of supplying a minimum pressure at the nozzle end of three-thousand (3,000) psi. use a zero-degree rotary, vibratory or wobble-type nozzle. The nozzle end will be held four (4) to eight (8) inches away from the surface. The surface will be allowed to dry a minimum of twenty-four (24) hours of continuous dry weather after water blasting or concrete wetting before applying paint system.

ITEM 680: HIGHWAY TRAFFIC SIGNALS

If there are existing traffic signals presently in operation within the project limits, keep the existing signals in operation until the proposed signals are in operation, or as directed. Remove the old signals and equipment.

Maintain the integrity and function of each existing signalized intersection. Once the integrity or function of the signal is altered, continue work at that location without delay or interruption until restoring to the original or final operational design.

The Contractor will furnish traffic signal controller cabinets as specified in the contract documents. TxDOT or City will not provide traffic signal controller cabinet. The cost for the signal controller cabinet is included on bid item 680.

The Contractor shall furnish and install a Siemens 8132-000-*** (M60 NEMA Linux) Type 2 Controller Unit and a Mobotrex Distribution EL712-TX2 (Size 6, 16-position, Base Mount) Cabinet Assembly.

City will furnish emergency vehicle preemption equipment and cable. The contractor shall Install the equipment and cables furnished by the City. The cost of installation of the complete and operational system as specified on plans will be subsidiary to Item 680.

ITEM 682: VEHICLE AND PEDESTRAIN SIGNAL HEADS

Provide new signal head housings with black aluminum housings and back plates.
Cover all signal heads installed, but not in operation, in an approved manner from the time of installation until the signal is placed in operation. This will not be paid for directly, but will be subsidiary to Item 682, “Vehicle and Pedestrian Signal Heads”.

Provide and install standard detachable tunnel visors on all signal heads. Provide and install all necessary mounting hardware to insure proper mounting of all signal heads. The mounting hardware and attachments will be new (no reuse of old existing attachment hardware) and the same color as the signal head housings. Use signal heads made of aluminum with 12-inch LED indications and aluminum back plates.

Install signal heads mounted on mast arms, as described on the Traffic Signal Support Structures Details, or as approved. Mount signal heads mounted on end of arm with a 90-degree mast arm elbow fitting as shown on the Structure Assembly on the Traffic Signal Support Structures Details.

Use standard 1 1/2-inch diameter steel pipe side pole mount for pedestrian signal heads.

Ensure that each signal head has a minimum vertical clearance of 18.5 feet and a maximum vertical clearance of 19 feet between the bottom edge of the signal head and the surface of the roadway.

ITEM 686: TRAFFIC SIGNAL POLE ASSEMBLIES (STEEL)

No exposed signal cable on the mast arm assemblies will be allowed. Install the signal cable so it will exit the mast arm directly behind each signal head as directed. This will require drilling holes in the mast at the exact location for each signal head. Drip loops are not allowed.

ITEM 6062: INTELLIGENT TRANSPORTATION SYSTEM (ITS) RADIO

Install intelligent transportation system (ITS) radio as specified on the plans. Final location shall be determined in the field. The ITS Radio shall be Vantage Pegasus or approved equivalent.

ITEM 6185: TRUCK MOUNTED ATTENUATORS:

The total number of truck mounted attenuators (TMA) required when utilizing the traffic control standards are shown in the tables below.

TCP 2 Series	Scenario	Required TMA
(2-1)-18 / (2-4)-18	All	1

WZ (BTS) Series	Scenario	Required TMA
(BTS-1)-13	Near Side Lane Closure	1

Shadow vehicles equipped for truck mounted attenuators (TMA) for stationary operations will be paid for by the day and must be available for use at any time as determined by the Engineer.

Mobile operations will be paid for by the hour, per specifications. For mobile operations, payment will be made only while the TMA is in use.

For mobile operations requiring multiple TMA’s, judgement may be applied in lower speed, urban / in town traffic environments to reduce the numbers of TMA in use where the added TMA may pose a hazard for traffic entering and exiting driveways, side streets, etc.

The contractor will be responsible for determining if one or more of these operations will be ongoing at the same time to determine the total number of TMA needed for the project for those times per plan requirements. Additional TMAs used that are not specified in the plans in which the contractor expects compensation will require prior approval from the Engineer.

ITEM 6306: VIDEO IMAGING VEHICLE DETECTION SYSTEM

Install Video Imaging Vehicle Detection System (VIVDS) as specified on the plans. Final location shall be determined in the field. The VIVDS system be Vantage Next or approved equivalent.

QUANTITY SHEET

CONTROLLING PROJECT ID 0055-15-072 **DISTRICT** Waco **COUNTY** McLennan
HIGHWAY US 84

			CONTROL SECTION JOB		**0055-15-072**		TOTAL EST.	TOTAL FINAL
			PROJECT ID		**A00133719**			
			COUNTY		**McLennan**			
			HIGHWAY		**US 84**			
ALT	**BID CODE**	**DESCRIPTION**		**UNIT**	EST.	FINAL		
	100-6001	PREPARING ROW		AC	0.350		0.350	
	100-6006	PREP ROW (TREE)(LESS THAN 24" DIA)		EA	19.000		19.000	
	100-6007	PREP ROW (TREE)(GREATER THAN 24" DIA)		EA	5.000		5.000	
	100-6015	PREPARING ROW (HAND CLEARING)		AC	2.800		2.800	
	104-6001	REMOVING CONC (PAV)		SY	480.000		480.000	
	104-6009	REMOVING CONC (RIPRAP)		SY	1,070.000		1,070.000	
	104-6011	REMOVING CONC (MEDIANS)		SY	134.000		134.000	
	104-6017	REMOVING CONC (DRIVEWAYS)		SY	8,406.000		8,406.000	
	104-6029	REMOVING CONC (CURB OR CURB & GUTTER)		LF	2,283.000		2,283.000	
	104-6036	REMOVING CONC (SIDEWALK OR RAMP)		SY	248.000		248.000	
	104-6040	REMOVING CONC (PAVERS)		SY	242.000		242.000	
	105-6037	REMOVING STAB BASE AND ASPH PAV(0"-16")		SY	7,558.000		7,558.000	
	110-6001	EXCAVATION (ROADWAY)		CY	4,409.000		4,409.000	
	132-6003	EMBANKMENT (FINAL)(ORD COMP)(TY B)		CY	1,033.000		1,033.000	
	162-6002	BLOCK SODDING		SY	11,414.000		11,414.000	
	168-6001	VEGETATIVE WATERING		MG	31.100		31.100	
	247-6303	FL BS (CMP IN PLC)(TY D GR-1-2)(9")		SY	55.000		55.000	
	340-6011	D-GR HMA(SQ) TY-B PG64-22		TON	504.000		504.000	
	340-6047	D-GR HMA(SQ) TY-C SAC-A PG70-22		TON	657.000		657.000	
	360-6003	CONC PVMT (CONT REINF - CRCP) (9")		SY	611.000		611.000	
	403-6001	TEMPORARY SPL SHORING		SF	1,542.000		1,542.000	
	416-6031	DRILL SHAFT (TRF SIG POLE) (30 IN)		LF	248.600		248.600	
	416-6032	DRILL SHAFT (TRF SIG POLE) (36 IN)		LF	541.200		541.200	
	416-6034	DRILL SHAFT (TRF SIG POLE) (48 IN)		LF	416.100		416.100	
	420-6136	CL C CONC (RAC-R)		CY	11.000		11.000	
	423-6004	RETAINING WALL (CONC BLOCK)		SF	27.000		27.000	
	432-6002	RIPRAP (CONC)(5 IN)		CY	403.000		403.000	
	432-6033	RIPRAP (STONE PROTECTION)(18 IN)		CY	333.000		333.000	
	432-6044	RIPRAP (CONC)(FLUME)		CY	4.000		4.000	
	438-6001	CLEANING AND SEALING EXISTING JOINTS		LF	26.000		26.000	
	450-6050	RAIL (HANDRAIL)(TY D)		LF	1,087.000		1,087.000	
	450-6101	RAIL (TY C2P)		LF	139.000		139.000	
	451-6064	RETROFIT RAIL (TY C2P)		LF	44.000		44.000	
	462-6071	CONC BOX CULV (9 FT X 8 FT)(EXTEND)		LF	29.000		29.000	
	464-6001	RC PIPE (CL III)(12 IN)		LF	12.000		12.000	
	464-6008	RC PIPE (CL III)(36 IN)		LF	34.000		34.000	
	464-6017	RC PIPE (CL IV)(18 IN)		LF	141.000		141.000	

QUANTITY SHEET

CONTROLLING PROJECT ID 0055-15-072 **DISTRICT** Waco **COUNTY** McLennan
HIGHWAY US 84

			CONTROL SECTION JOB		**0055-15-072**	TOTAL EST.	TOTAL FINAL
			PROJECT ID		**A00133719**		
			COUNTY		**McLennan**		
			HIGHWAY		**US 84**		
ALT	**BID CODE**	**DESCRIPTION**	**UNIT**	EST.	FINAL		
	464-6018	RC PIPE (CL IV)(24 IN)	LF	176.000		176.000	
	465-6016	INLET (COMPL)(PCO)(3FT)(BOTH)	EA	1.000		1.000	
	465-6158	INLET(COMPL)(PAZD)(FG)(3FTX3FT-3FTX3FT)	EA	1.000		1.000	
	465-6372	INLET (COMPL) (DROP) (SPL)	EA	1.000		1.000	
	465-6578	INLET (COMPL)(CCO)(6FT)(BOTH)	EA	1.000		1.000	
	466-6171	WINGWALL (PW - 1) (HW=10 FT)	EA	1.000		1.000	
	466-6255	WINGWALL (PW-1)(HW=11FT)(MOD)	EA	1.000		1.000	
	467-6363	SET (TY II) (18 IN) (RCP) (6: 1) (P)	EA	5.000		5.000	
	467-6395	SET (TY II) (24 IN) (RCP) (6: 1) (P)	EA	2.000		2.000	
	471-6003	GRATE & FRAME	EA	3.000		3.000	
	479-6001	ADJUSTING MANHOLES	EA	25.000		25.000	
	479-6002	ADJUSTING INLETS	EA	4.000		4.000	
	479-6005	ADJUSTING MANHOLES (WATER VALVE BOX)	EA	35.000		35.000	
	479-6006	ADJUSTING INLET (CAP)	EA	1.000		1.000	
	496-6002	REMOV STR (INLET)	EA	1.000		1.000	
	496-6004	REMOV STR (SET)	EA	2.000		2.000	
	496-6006	REMOV STR (HEADWALL)	EA	1.000		1.000	
	496-6007	REMOV STR (PIPE)	LF	250.000		250.000	
	496-6030	REMOVE STR (BOLLARD)	EA	5.000		5.000	
	496-6040	REMOV STR (RET WALL)	LF	1,084.000		1,084.000	
	496-6091	REMOV STR (CURB)	EA	1.000		1.000	
	496-6099	REMOVE STR (RAIL)	LF	293.000		293.000	
	500-6001	MOBILIZATION	LS	100.00%		100.00%	
	502-6001	BARRICADES, SIGNS AND TRAFFIC HANDLING	MO	16.000		16.000	
	506-6002	ROCK FILTER DAMS (INSTALL) (TY 2)	LF	135.000		135.000	
	506-6011	ROCK FILTER DAMS (REMOVE)	LF	135.000		135.000	
	506-6038	TEMP SEDMT CONT FENCE (INSTALL)	LF	395.000		395.000	
	506-6039	TEMP SEDMT CONT FENCE (REMOVE)	LF	395.000		395.000	
	512-6021	PORT CTB (DES SOURCE)(LOW PROF)(TY 1)	LF	280.000		280.000	
	512-6022	PORT CTB (DES SOURCE)(LOW PROF)(TY 2)	LF	20.000		20.000	
	512-6033	PORT CTB (MOVE)(LOW PROF)(TY 1)	LF	240.000		240.000	
	512-6034	PORT CTB (MOVE)(LOW PROF)(TY 2)	LF	40.000		40.000	
	512-6045	PORT CTB (STKPL)(LOW PROF)(TY 1)	LF	280.000		280.000	
	512-6046	PORT CTB (STKPL)(LOW PROF)(TY 2)	LF	20.000		20.000	
	528-6008	COLORED TEXTURED CONC (5")	SY	118.000		118.000	
	529-6002	CONC CURB (TY II)	LF	3,240.000		3,240.000	
	529-6005	CONC CURB (MONO) (TY II)	LF	426.000		426.000	

QUANTITY SHEET

CONTROLLING PROJECT ID 0055-15-072 **DISTRICT** Waco **COUNTY** McLennan
HIGHWAY US 84

						TOTAL EST.	TOTAL FINAL
		CONTROL SECTION JOB		**0055-15-072**			
		PROJECT ID		**A00133719**			
		COUNTY		**McLennan**			
		HIGHWAY		**US 84**			
ALT	**BID CODE**	**DESCRIPTION**	**UNIT**	EST.	FINAL		
	529-6008	CONC CURB & GUTTER (TY II)	LF	1,879.000		1,879.000	
	529-6016	CONC CURB (TY F1)	LF	24.000		24.000	
	529-6017	CONC CURB (TY F2)	LF	80.000		80.000	
	529-6020	CONC CURB & GUTTER (ARMOR CURB)	LF	84.000		84.000	
	529-6030	CONC CURB & GUTTER (VALLEY GUTTER)	LF	15.000		15.000	
	530-6004	DRIVEWAYS (CONC)	SY	12,507.000		12,507.000	
	530-6017	DRIVEWAYS (CONC) (HES)	SY	43.000		43.000	
	531-6002	CONC SIDEWALKS (5")	SY	14,391.000		14,391.000	
	531-6004	CURB RAMPS (TY 1)	EA	86.000		86.000	
	531-6005	CURB RAMPS (TY 2)	EA	13.000		13.000	
	531-6006	CURB RAMPS (TY 3)	EA	30.000		30.000	
	531-6008	CURB RAMPS (TY 5)	EA	9.000		9.000	
	531-6009	CURB RAMPS (TY 6)	EA	10.000		10.000	
	531-6010	CURB RAMPS (TY 7)	EA	45.000		45.000	
	531-6013	CURB RAMPS (TY 10)	EA	19.000		19.000	
	531-6016	CURB RAMPS (TY 21)	EA	12.000		12.000	
	531-6050	CONCRETE SIDEWALK (STEPS)	SY	4.000		4.000	
	531-6057	CONC SIDEWALK (SPECIAL)(RETAINING WALL)	SF	17,525.000		17,525.000	
	531-6059	SIDEWALK CURB DRAIN TY I	EA	6.000		6.000	
	531-6060	SIDEWALK CURB DRAIN TY II	EA	3.000		3.000	
	536-6002	CONC MEDIAN	SY	59.000		59.000	
	542-6001	REMOVE METAL BEAM GUARD FENCE	LF	25.000		25.000	
	542-6002	REMOVE TERMINAL ANCHOR SECTION	EA	3.000		3.000	
	544-6003	GUARDRAIL END TREATMENT (REMOVE)	EA	1.000		1.000	
	618-6023	CONDT (PVC) (SCH 40) (2")	LF	35.000		35.000	
	618-6029	CONDT (PVC) (SCH 40) (3")	LF	2,800.000		2,800.000	
	618-6046	CONDT (PVC) (SCH 80) (2")	LF	425.000		425.000	
	618-6047	CONDT (PVC) (SCH 80) (2") (BORE)	LF	355.000		355.000	
	618-6054	CONDT (PVC) (SCH 80) (3") (BORE)	LF	12,405.000		12,405.000	
	620-6007	ELEC CONDR (NO.8) BARE	LF	14,730.000		14,730.000	
	620-6008	ELEC CONDR (NO.8) INSULATED	LF	9,510.000		9,510.000	
	620-6009	ELEC CONDR (NO.6) BARE	LF	545.000		545.000	
	620-6010	ELEC CONDR (NO.6) INSULATED	LF	1,090.000		1,090.000	
	624-6010	GROUND BOX TY D (162922)W/APRON	EA	162.000		162.000	
	628-6144	ELC SRV TY D 120/240 060(NS)SS(E)PS(U)	EA	22.000		22.000	
	644-6001	IN SM RD SN SUP&AM TY10BWG(1)SA(P)	EA	60.000		60.000	
	644-6004	IN SM RD SN SUP&AM TY10BWG(1)SA(T)	EA	2.000		2.000	

QUANTITY SHEET

CONTROLLING PROJECT ID 0055-15-072 **DISTRICT** Waco **COUNTY** McLennan
HIGHWAY US 84

			CONTROL SECTION JOB		**0055-15-072**	TOTAL EST.	TOTAL FINAL
			PROJECT ID		**A00133719**		
			COUNTY		**McLennan**		
			HIGHWAY		**US 84**		
ALT	**BID CODE**	**DESCRIPTION**	**UNIT**	EST.	FINAL		
	644-6033	IN SM RD SN SUP&AM TYS80(1)SA(U)	EA	1.000		1.000	
	644-6068	RELOCATE SM RD SN SUP&AM TY 10BWG	EA	6.000		6.000	
	644-6076	REMOVE SM RD SN SUP&AM	EA	47.000		47.000	
	658-6057	INSTL OM ASSM (OM-3R)(TWT)GND	EA	1.000		1.000	
	658-6080	INSTL DEL ASSM (D-SW)SZ 1(WFLX)GND	EA	3.000		3.000	
	666-6006	REFL PAV MRK TY I (W)4"(DOT)(100MIL)	LF	52.000		52.000	
	666-6030	REFL PAV MRK TY I (W)8"(DOT)(100MIL)	LF	371.000		371.000	
	666-6036	REFL PAV MRK TY I (W)8"(SLD)(100MIL)	LF	10,215.000		10,215.000	
	666-6048	REFL PAV MRK TY I (W)24"(SLD)(100MIL)	LF	11,666.000		11,666.000	
	666-6099	REF PAV MRK TY I(W)18"(YLD TRI)(100MIL)	EA	33.000		33.000	
	666-6224	PAVEMENT SEALER 4"	LF	15,690.000		15,690.000	
	666-6226	PAVEMENT SEALER 8"	LF	10,586.000		10,586.000	
	666-6230	PAVEMENT SEALER 24"	LF	11,666.000		11,666.000	
	666-6300	RE PM W/RET REQ TY I (W)4"(BRK)(100MIL)	LF	6,850.000		6,850.000	
	666-6303	RE PM W/RET REQ TY I (W)4"(SLD)(100MIL)	LF	1,845.000		1,845.000	
	666-6315	RE PM W/RET REQ TY I (Y)4"(SLD)(100MIL)	LF	6,720.000		6,720.000	
	668-6019	PREFAB PAV MRK TY B (W)(ARROW)	EA	116.000		116.000	
	668-6020	PREFAB PAV MRK TY B (W)(DBL ARROW)	EA	26.000		26.000	
	668-6027	PREFAB PAV MRK TY B (W)(WORD)	EA	90.000		90.000	
	672-6007	REFL PAV MRKR TY I-C	EA	186.000		186.000	
	672-6009	REFL PAV MRKR TY II-A-A	EA	334.000		334.000	
	672-6010	REFL PAV MRKR TY II-C-R	EA	743.000		743.000	
	677-6001	ELIM EXT PAV MRK & MRKS (4")	LF	13,405.000		13,405.000	
	677-6003	ELIM EXT PAV MRK & MRKS (8")	LF	10,021.000		10,021.000	
	677-6007	ELIM EXT PAV MRK & MRKS (24")	LF	6,519.000		6,519.000	
	677-6008	ELIM EXT PAV MRK & MRKS (ARROW)	EA	116.000		116.000	
	677-6009	ELIM EXT PAV MRK & MRKS (DBL ARROW)	EA	32.000		32.000	
	677-6012	ELIM EXT PAV MRK & MRKS (WORD)	EA	82.000		82.000	
	677-6018	ELIM EXT PAV MRK & MRKS (18")(YLD TRI)	EA	38.000		38.000	
	680-6002	INSTALL HWY TRF SIG (ISOLATED)	EA	22.000		22.000	
	680-6004	REMOVING TRAFFIC SIGNALS	EA	22.000		22.000	
	680-6011	INSTALL HWY TRF SIG (UPGRADE)	EA	1.000		1.000	
	682-6001	VEH SIG SEC (12")LED(GRN)	EA	232.000		232.000	
	682-6002	VEH SIG SEC (12")LED(GRN ARW)	EA	81.000		81.000	
	682-6003	VEH SIG SEC (12")LED(YEL)	EA	232.000		232.000	
	682-6004	VEH SIG SEC (12")LED(YEL ARW)	EA	116.000		116.000	
	682-6005	VEH SIG SEC (12")LED(RED)	EA	232.000		232.000	

QUANTITY SHEET

CONTROLLING PROJECT ID 0055-15-072 **DISTRICT** Waco **COUNTY** McLennan
HIGHWAY US 84

			CONTROL SECTION JOB		**0055-15-072**	TOTAL EST.	TOTAL FINAL
			PROJECT ID		**A00133719**		
			COUNTY		**McLennan**		
			HIGHWAY		**US 84**		
ALT	**BID CODE**	**DESCRIPTION**	**UNIT**	EST.	FINAL		
	682-6006	VEH SIG SEC (12")LED(RED ARW)	EA	65.000		65.000	
	682-6018	PED SIG SEC (LED)(COUNTDOWN)	EA	134.000		134.000	
	682-6054	BACKPLATE W/REF BRDR(3 SEC)(VENT)ALUM	EA	240.000		240.000	
	682-6055	BACKPLATE W/REF BRDR(4 SEC)(VENT)ALUM	EA	47.000		47.000	
	682-6056	BACKPLATE W/REF BRDR(5 SEC)(VENT)ALUM	EA	10.000		10.000	
	684-6007	TRF SIG CBL (TY A)(12 AWG)(2 CONDR)	LF	20,675.000		20,675.000	
	684-6012	TRF SIG CBL (TY A)(12 AWG)(7 CONDR)	LF	13,415.000		13,415.000	
	684-6021	TRF SIG CBL (TY A)(12 AWG)(16 CONDR)	LF	11,935.000		11,935.000	
	684-6049	TRF SIG CBL (TY A)(16 AWG)(3 CONDR)	LF	16,305.000		16,305.000	
	686-6025	INS TRF SIG PL AM (S)1 ARM(24')	EA	6.000		6.000	
	686-6027	INS TRF SIG PL AM(S)1 ARM(24')LUM	EA	1.000		1.000	
	686-6029	INS TRF SIG PL AM (S)1 ARM(28')	EA	4.000		4.000	
	686-6031	INS TRF SIG PL AM(S)1 ARM(28')LUM	EA	1.000		1.000	
	686-6033	INS TRF SIG PL AM(S)1 ARM(32')	EA	5.000		5.000	
	686-6035	INS TRF SIG PL AM(S)1 ARM(32')LUM	EA	4.000		4.000	
	686-6037	INS TRF SIG PL AM(S)1 ARM(36')	EA	5.000		5.000	
	686-6039	INS TRF SIG PL AM(S)1 ARM(36')LUM	EA	3.000		3.000	
	686-6041	INS TRF SIG PL AM(S)1 ARM(40')	EA	2.000		2.000	
	686-6043	INS TRF SIG PL AM(S)1 ARM(40')LUM	EA	6.000		6.000	
	686-6045	INS TRF SIG PL AM(S)1 ARM(44')	EA	8.000		8.000	
	686-6047	INS TRF SIG PL AM(S)1 ARM(44')LUM	EA	8.000		8.000	
	686-6049	INS TRF SIG PL AM(S)1 ARM(48')	EA	5.000		5.000	
	686-6051	INS TRF SIG PL AM(S)1 ARM(48')LUM	EA	4.000		4.000	
	686-6055	INS TRF SIG PL AM(S)1 ARM(50')LUM	EA	1.000		1.000	
	686-6057	INS TRF SIG PL AM(S)1 ARM(55')	EA	2.000		2.000	
	686-6059	INS TRF SIG PL AM(S)1 ARM(55')LUM	EA	5.000		5.000	
	686-6063	INS TRF SIG PL AM(S)1 ARM(60')LUM	EA	3.000		3.000	
	686-6065	INS TRF SIG PL AM(S)1 ARM(65')	EA	3.000		3.000	
	686-6067	INS TRF SIG PL AM(S)1 ARM(65')LUM	EA	5.000		5.000	
	686-6089	INS TRF SIG PL AM(S)2 ARM(28-28')	EA	1.000		1.000	
	687-6001	PED POLE ASSEMBLY	EA	77.000		77.000	
	687-6002	PEDESTRIAN PUSH BUTTON POLE	EA	6.000		6.000	
	688-6001	PED DETECT PUSH BUTTON (APS)	EA	134.000		134.000	
	688-6003	PED DETECTOR CONTROLLER UNIT	EA	22.000		22.000	
	690-6006	REMOVAL OF GROUND BOXES	EA	3.000		3.000	
	690-6009	REMOVAL OF CABLES	LF	350.000		350.000	
	690-6024	REMOVAL OF SIGNAL HEAD ASSM	EA	22.000		22.000	

QUANTITY SHEET

CONTROLLING PROJECT ID 0055-15-072 **DISTRICT** Waco **COUNTY** McLennan
HIGHWAY US 84

						TOTAL EST.	TOTAL FINAL
		CONTROL SECTION JOB		**0055-15-072**			
		PROJECT ID		**A00133719**			
		COUNTY		**McLennan**			
		HIGHWAY		**US 84**			
ALT	**BID CODE**	**DESCRIPTION**	**UNIT**	EST.	FINAL		
	690-6027	REMOVAL OF SIGNAL RELATED SIGNS	EA	6.000		6.000	
	690-6030	REMOVAL OF PEDESTRIAN PUSH BUTTONS	EA	4.000		4.000	
	690-6089	REMOVE PED POLE ASSM	EA	4.000		4.000	
	690-6097	REMOVE SPREAD SPECTRUM ANTENNA	EA	1.000		1.000	
	752-6015	TREE AND BRUSH REMOVAL	AC	0.010		0.010	
	5008-6002	MOVE AND RESET PRECAST CONC WHEEL STOPS	EA	75.000		75.000	
	5033-6001	FIXED BOLLARD	EA	2.000		2.000	
	6027-6003	CONDUIT (PREPARE)	LF	705.000		705.000	
	6027-6008	GROUND BOX (PREPARE)	EA	7.000		7.000	
	6027-6009	GROUND BOX (ADJUST)	EA	8.000		8.000	
	6058-6001	BBU SYSTEM (EXTERNAL BATT CABINET)	EA	9.000		9.000	
	6062-6038	ITS RADIO (DUAL)(5 GHZ/5 GHZ)-C-U	EA	23.000		23.000	
	6120-6001	DEAD END ROADWAY BARRICADE	LF	30.000		30.000	
	6185-6002	TMA (STATIONARY)	DAY	150.000		150.000	
	6185-6003	TMA (MOBILE OPERATION)	HR	90.000		90.000	
	6306-6001	VIVDS PROSR SYS	EA	22.000		22.000	
	6306-6002	VIVDS CAM ASSY FXD LNS	EA	84.000		84.000	
	6306-6007	VIVDS CABLING	LF	15,580.000		15,580.000	
	7012-6001	CURB INLET SEDIMENT PROTECTION	LF	1,445.000		1,445.000	
	7049-6120	REMOVE AND RELOCATE WTR METER AND VAULT	EA	7.000		7.000	
	7049-6121	ADJUSTING METER VAULT	EA	6.000		6.000	
	7049-6219	ADJUST OR RELOCATE WATER METER & BOX	EA	114.000		114.000	
	18	EROSION CONTROL MAINTENANCE: CONTRACTOR FORCE ACCOUNT WORK (PART)	LS	1.000		1.000	
		SAFETY CONTINGENCY: CONTRACTOR FORCE ACCOUNT WORK (PARTICIPATING)	LS	1.000		1.000	

ROADWAY SUMMARY

SHEET NO.	LOCATION	100 6001 PREPARING ROW AC	100 6006 PREP ROW (TREE) (LESS THAN 24" DIA) EA	100 6007 PREP ROW (TREE) (GREATER THAN 24" DIA) EA	100 6015 PREPARING ROW (HAND CLEARING) AC	104 6001 REMOVING CONC (PAV) SY	104 6009 REMOVING CONC (RIPRAP) SY	104 6011 REMOVING CONC (MEDIANS) SY	104 6017 REMOVING CONC (DRIVEWAYS) SY	104 6029 REMOVING CONC (CURB OR CURB & GUTTER) LF	104 6036 REMOVING CONC (SIDEWALK OR RAMP) SY	104 6040 REMOVING CONC (PAVERS) SY	105 6037 REMOVING STAB BASE AND ASPH PAV (0"-16") SY	162 6002 BLOCK SODDING SY
	CSJ 0055-15-072													
59	AT CENTERPOINT	0.01	1							41		29		255
60	BETWEEN CENTERPOINT AND LAKE AIR DRIVE		5						285	7			115	175
61	AT LAKE AIR DRIVE	0.01						44	96			16	93	55
62	AT FACTORY DR						11		141				24	8
63	AT NORTH INDUSTRIAL DR								53	148			314	220
64	AT TOWNE OAKS DR	0.01							27	170			314	160
65	BETWEEN TOWNE OAKS DR AND VILLA DR								110	59			615	378
66	AT VILLA DRIVE								80				338	573
67	AT SUN VALLEY DR							6	320			19	30	271
68	BETWEEN SUN VALLEY DR AND ESTER ST								102				165	571
69	AT ESTER ST	0.01							18				427	246
70	AT N NEW RD						54		17	2	7		161	164
71	BETWEEN N NEW RD AND LOOP 396 (N VALLEY MILLS DR)		1	2			138		35	37			41	403
72	AT LOOP 396 (N VALLEY MILLS RD)	0.02	5	1		6	30	11	27			60	33	205
73	AT N 43RD ST	0.01						20	75	239	9	118	199	10
74	AT N 42RD ST						29		113	20			103	2
75	AT N 41ST ST						3		130	52			415	89
76	AT N 40TH ST								175	69			479	97
77	AT N 39TH ST						6		246	40			69	78
78	AT N 38TH ST								141	45			83	128
79	BETWEEN N 38TH ST AND N 37TH ST								510	124			252	289
80	AT N 37TH ST								303	73			151	139
81	AT N 36TH ST	0.01				3		4	108	92			384	80
82	AT N 35TH ST			1					141	74			68	190
83	AT N 34TH ST								51	23			9	106
84	AT N 33RD ST								162	30			29	186
85	AT N 32ND ST								181	77				173
86	AT N 31ST		1	1					57	33				163
87	AT N 30TH ST		1						86	8				187
88	AT 30TH ST								95	10			29	100
89	AT N 29TH ST		1						50	9			84	240
90	AT N 28TH ST				0.04				18				101	220
91	AT N 27TH ST								35		11		37	159
92	AT N 26TH ST	0.02					38		251		14		152	65
93	AT N 25TH ST	0.01	3				95		584				59	72
94	AT N 25TH ST						71	16	251	47	8		273	
95	AT N 24TH ST						18		18	45			49	88
96	AT N 23RD ST				0.06				19		9			207
97	AT N 22ND ST				0.16				29		15			85
98	AT N 21ST ST				0.06		2		102	19			76	69
99	AT N 20TH ST								50	62			125	40
100	BETWEEN N 20TH ST AN N 19TH ST						3							107
101	AT N 19TH ST								129	9	26			162
102	AT N 18TH ST	0.01						15	107				38	123
103	AT N 17TH ST	0.01			0.07					35				60
104	AT N 16TH ST				0.07				19	20				255
105	AT N 15TH ST				0.03				57	51	11			163
106	AT NOVELTY ST				0.09					15				30
107	AT N 14TH ST				0.12				48				47	20
108	AT N 13TH ST				0.06		9		83	40			68	121
109	AT N 12TH ST						13		288	9			51	220
110	AT N 11TH ST						9		229	9	80		156	126
111	AT N 10TH ST						15		183	44			241	54
112	AT N 9TH ST						23		158	21				135
113	BETWEEN N 9TH ST AND N 8TH ST								7		21			87
114	AT N 8TH ST	0.01							141	49			143	191
115	BETWEEN N 8TH ST AND N 6TH ST	0.01							32	17			27	332
116	AT N 6TH ST	0.01							28	69			94	121
117	AT N 5TH ST	0.01					8		299				46	66
118	AT N 4TH ST	0.06				4	91	16	107	5	16			250
119	AT N 3RD ST	0.12							36	22				475
120	BETWEEN N 3RD ST AND N UNIVERSITY PARKS DR								130	33				607
121	AT N UNIVERSITY PARKS DR													541
122	AT DALLAS STREET				0.9						21			24
123	AT PRESTON ST				0.12				182	18			122	
124	AT TURNER ST				0.05		35		240	78			65	
125	AT HOOD ST				0.03		13		214				258	
126	AT ROSE ST		1		0.05									
127	BETWEEN ROSE ST AND GARRISON ST				0.1		4		65				10	
128	AT GARRISON ST					3	47	2	187	25			139	159
129	AT HUBERT ST				0.13					22			37	30
130	AT DAWSON ST				0.66				8					9
131	BETWEEN OLIVE ST AND FM 933 (CLIFTON ST)												15	
132	AT FM 933 (CLIFTON ST)						55		137	37			42	
151	INTERSECTION RECONSTRUCTION DETAILS					464							63	
	PROJECT TOTALS	0.35	19	5	2.8	480	820	134	8406	2283	248	242	7558	11414

Kimley»Horn F-928

© 2021

Texas Department of Transportation

QUANTITY SUMMARY

SHEET 1 OF 14

FED. RD. DIV. NO.	PROJECT ID.	HIGHWAY NO.
6	(SEE TITLE SHEET)	US 84

STATE	DIST.	COUNTY	SHEET NO.
TEXAS	WAC	MCLENNAN	10
CONT.	SECT.	JOB	
0055	15	072	

FILENAME: pw:\\kh-pw.bentley.com:kh-pw-01\Documents\01 Active Projects\TX-FTW-063586010 - US 84 (Waco Drive)\WAC 0055150724 - Design\Plan Set\1. General\US84_GEN_SUM01.dgn
PLOTTED: 12/21/2020

ROADWAY SUMMARY (CONT.)

SHEET NO.	LOCATION	168 6001 VEGETATIVE WATERING	247 6303 FL BS (CMP IN PLC)(TY D GR-1-2)(9")	340 6011 D-GR HMA(SQ) TY-B PG64-22	340 6047 D-GR HMA(SQ) TY-C SAC-A PG70-22	360 6003 CONC PVMT (CONT REINF - CRCP)(9")	423 6004 RETAINING WALL (CONC BLOCK)	432 6002 RIPRAP (CONC)(5 IN)	432 6044 RIPRAP (CONC)(FLUME)	438 6001 CLEANING AND SEALING EXISTING JOINTS	450 6050 RAIL (HANDRAIL)(TY D)	464 6008 RC PIPE (CL III)(36 IN)	464 6017 RC PIPE (CL IV)(18 IN)	464 6018 RC PIPE (CL IV)(24 IN)
		MG	SY	TON	TON	SY	SF	CY	CY	LF	LF	LF	LF	LF
	CSJ 0055-15-072													
59	AT CENTERPOINT	0.7											42	
60	BETWEEN CENTERPOINT AND LAKE AIR DRIVE	0.5		41	18									
61	AT LAKE AIR DRIVE	0.1		8	13			5						
62	AT FACTORY DR	0.1		8	5			7						
63	AT NORTH INDUSTRIAL DR	0.6		24	26			8						
64	AT TOWNE OAKS DR	0.5	55	34	26			8						
65	BETWEEN TOWNE OAKS DR AND VILLA DR	1		62	34			2			92			
66	AT VILLA DRIVE	1.6		58	30						77	25		176
67	AT SUN VALLEY DR	0.7		10	7									
68	BETWEEN SUN VALLEY DR AND ESTER ST	1.5		9	10						103		46	
69	AT ESTER ST	0.7		40	28			1			22		53	
70	AT N NEW RD	0.4		19	17			8			49			
71	BETWEEN N NEW RD AND LOOP 396 (N VALLEY MILLS DR)	1.1		5	3			34			292			
72	AT LOOP 396 (N VALLEY MILLS RD)	0.6		4	4	16		23			208			
73	AT N 43RD ST	0.1		3	26			6	4					
74	AT N 42RD ST	0.1			14			12						
75	AT N 41ST ST	0.2			11			3		16				
76	AT N 40TH ST	0.3			20			1						
77	AT N 39TH ST	0.2			7			5						
78	AT N 38TH ST	0.3			7			2						
79	BETWEEN N 38TH ST AND N 37TH ST	0.8			17			2						
80	AT N 37TH ST	0.4			13			2						
81	AT N 36TH ST	0.2			17	6		4						
82	AT N 35TH ST	0.5			5			1						
83	AT N 34TH ST	0.3			2			1			85			
84	AT N 33RD ST	0.5						4						
85	AT N 32ND ST	0.5												
86	AT N 31ST	0.4						2						
87	AT N 30TH ST	0.5												
88	AT 30TH ST	0.3			5			1						
89	AT N 29TH ST	0.6			1						87			
90	AT N 28TH ST	0.6			10			1						
91	AT N 27TH ST	0.4			5			3						
92	AT N 26TH ST	0.2			10			17						
93	AT N 25TH ST	0.2			3			14						
94	AT N 25TH ST				31			13						
95	AT N 24TH ST	0.2			13			7						
96	AT N 23RD ST	0.6												
97	AT N 22ND ST	0.2												
98	AT N 21ST ST	0.2			11			7						
99	AT N 20TH ST	0.1		10	17			3		10				
100	BETWEEN N 20TH ST AN N 19TH ST	0.3						1						
101	AT N 19TH ST	0.4												
102	AT N 18TH ST	0.3			7			4						
103	AT N 17TH ST	0.2						3						
104	AT N 16TH ST	0.7					27							
105	AT N 15TH ST	0.4						1						
106	AT NOVELTY ST	0.1												
107	AT N 14TH ST	0.1			2									
108	AT N 13TH ST	0.3			9			4						
109	AT N 12TH ST	0.6		8	9			8						
110	AT N 11TH ST	0.3		11	19			5						
111	AT N 10TH ST	0.1			19			17						
112	AT N 9TH ST	0.4						8						
113	BETWEEN N 9TH ST AND N 8TH ST	0.2						1						
114	AT N 8TH ST	0.5			12			9						
115	BETWEEN N 8TH ST AND N 6TH ST	0.9									28			
116	AT N 6TH ST	0.3			4									
117	AT N 5TH ST	0.2			5			6						
118	AT N 4TH ST	0.7				11		22						
119	AT N 3RD ST	1.3												
120	BETWEEN N 3RD ST AND N UNIVERSITY PARKS DR	1.6						1						
121	AT N UNIVERSITY PARKS DR	1.5						1						
122	AT DALLAS STREET	0.1						4						
123	AT PRESTON ST				11			6						
124	AT TURNER ST				15			28						
125	AT HOOD ST				33			13						
126	AT ROSE ST				3			1						
127	BETWEEN ROSE ST AND GARRISON ST							1						
128	AT GARRISON ST	0.4			20	4		21			44			
129	AT HUBERT ST	0.1			10									
130	AT DAWSON ST	0.1												
131	BETWEEN OLIVE ST AND FM 933 (CLIFTON ST)				4									
132	AT FM 933 (CLIFTON ST)				9			10						
151	INTERSECTION RECONSTRUCTION DETAILS			150		574								
	PROJECT TOTALS	31.1	55	504	657	611	27	382	4	26	1087	25	141	176

FILENAME: pw:\\kh-pw.bentley.com:kh-pw-01\Documents\01 Active Projects\TX-FTW-063586010 - US 84 (Waco Drive)\WAC 005515072\4 - Design\Plan Set\1. General\US84_GEN_SUM02.dgn
PLOTTED: 12/21/2020

Kimley»Horn F-928

© 2021

Texas Department of Transportation

QUANTITY SUMMARY

SHEET 2 OF 14

FED.RD. DIV.NO.	PROJECT ID.	HIGHWAY NO.
6	(SEE TITLE SHEET)	US 84

STATE	DIST.	COUNTY	SHEET NO.
TEXAS	WAC	MCLENNAN	11
CONT.	SECT.	JOB	
0055	15	072	

ROADWAY SUMMARY (CONT.)

SHEET NO.	LOCATION	465 * 6578	467 6363	467 6395	471 6003	479 6001	479 6002	479 6005	496 6004	496 6006	496 6007	496 6030	496 6040	496 6099
		INLET (COMPL) (CCO) (6FT) (BOTH)	SET (TY II) (18 IN) (RCP) (6:1) (P)	SET (TY II) (24 IN) (RCP) (6:1) (P)	GRATE & FRAME	ADJUSTING MANHOLES	ADJUSTING INLETS	ADJUSTING MANHOLES (WATER VALVE BOX)	REMOV STR (SET)	REMOV STR (HEADWALL)	REMOV STR (PIPE)	REMOVE STR (BOLLARD)	REMOV STR (RET WALL)	REMOVE STR (RAIL)
		EA	EA	EA	EA	EA	EA	EA	EA	EA	LF	EA	LF	LF
	CSJ 0055-15-072													
59	AT CENTERPOINT		1					1		1				
60	BETWEEN CENTERPOINT AND LAKE AIR DRIVE													
61	AT LAKE AIR DRIVE					1								
62	AT FACTORY DR				1			3						
63	AT NORTH INDUSTRIAL DR							6						
64	AT TOWNE OAKS DR													
65	BETWEEN TOWNE OAKS DR AND VILLA DR													
66	AT VILLA DRIVE			2		2			2		164			
67	AT SUN VALLEY DR							2						
68	BETWEEN SUN VALLEY DR AND ESTER ST		2								43			
69	AT ESTER ST		2					1			43			
70	AT N NEW RD					1		1						
71	BETWEEN N NEW RD AND LOOP 396 (N VALLEY MILLS DR)				2			2						
72	AT LOOP 396 (N VALLEY MILLS RD)							6						
73	AT N 43RD ST	1				1		1						
74	AT N 42RD ST							1				1		
75	AT N 41ST ST							1						
76	AT N 40TH ST							3					22	
77	AT N 39TH ST					1		1						
78	AT N 38TH ST					3								
79	BETWEEN N 38TH ST AND N 37TH ST													
80	AT N 37TH ST													
81	AT N 36TH ST					1								
82	AT N 35TH ST					1							13	
83	AT N 34TH ST					2							34	41
84	AT N 33RD ST					2		1					75	
85	AT N 32ND ST					1		1					48	
86	AT N 31ST							1					76	
87	AT N 30TH ST							1						
88	AT 30TH ST													
89	AT N 29TH ST												35	87
90	AT N 28TH ST													
91	AT N 27TH ST												18	
92	AT N 26TH ST					1								
93	AT N 25TH ST					1						4		
94	AT N 25TH ST													
95	AT N 24TH ST													
96	AT N 23RD ST					1								
97	AT N 22ND ST													
98	AT N 21ST ST												11	
99	AT N 20TH ST													
100	BETWEEN N 20TH ST AN N 19TH ST						1							
101	AT N 19TH ST						1						35	
102	AT N 18TH ST						1	1					45	
103	AT N 17TH ST													
104	AT N 16TH ST												197	
105	AT N 15TH ST												45	
106	AT NOVELTY ST												28	
107	AT N 14TH ST												30	
108	AT N 13TH ST												35	
109	AT N 12TH ST												28	
110	AT N 11TH ST					1								
111	AT N 10TH ST					1								
112	AT N 9TH ST					2								
113	BETWEEN N 9TH ST AND N 8TH ST					1							62	
114	AT N 8TH ST							1						
115	BETWEEN N 8TH ST AND N 6TH ST													
116	AT N 6TH ST													
117	AT N 5TH ST												28	
118	AT N 4TH ST												58	
119	AT N 3RD ST						1							
120	BETWEEN N 3RD ST AND N UNIVERSITY PARKS DR												20	
121	AT N UNIVERSITY PARKS DR													
122	AT DALLAS STREET													
123	AT PRESTON ST													
124	AT TURNER ST													20
125	AT HOOD ST					1								
126	AT ROSE ST													
127	BETWEEN ROSE ST AND GARRISON ST													
128	AT GARRISON ST												141	
129	AT HUBERT ST													145
130	AT DAWSON ST													
131	BETWEEN OLIVE ST AND FM 933 (CLIFTON ST)													
132	AT FM 933 (CLIFTON ST)													
151	INTERSECTION RECONSTRUCTION DETAILS													
	PROJECT TOTALS	1	5	2	3	25	4	35	2	1	250	5	1084	293

* REFER TO CAST-IN-PLACE CURB INLET OUTSIDE ROADWAY (CCO MOD) SHEET FOR ADDITIONAL INFORMATION

Kimley»Horn F-928

© 2021

Texas Department of Transportation

QUANTITY SUMMARY

SHEET 3 OF 14

FED. RD. DIV. NO.	PROJECT ID.	HIGHWAY NO.
6	(SEE TITLE SHEET)	US 84

STATE	DIST.	COUNTY	SHEET NO.
TEXAS	WAC	MCLENNAN	12
CONT.	SECT.	JOB	
0055	15	072	

FILENAME: pw:\\kh-pw.bentley.com:kh-pw-01\Documents\01 Active Projects\TX-FTW-063586010 - US 84 (Waco Drive)\WAC 0055150724 - Design\Plan Set\1. General\US84_GEN_SUM03.dgn
PLOTTED: 12/21/2020

ROADWAY SUMMARY (CONT.)

SHEET NO.	LOCATION	528 6008 COLORED TEXTURED CONC (5") SY	529 6002 CONC CURB (TY II) LF	529 6005 CONC CURB (MONO) (TY II) LF	529 6008 CONC CURB & GUTTER (TY II) LF	529 6016 CONC CURB (TY F1) LF	529 6017 CONC CURB (TY F2) LF	529 6020 CONC CURB & GUTTER (ARMOR CURB) LF	529 6030 CONC CURB & GUTTER (VALLEY GUTTER) LF	530 6004 DRIVEWAYS (CONC) SY	530 6017 DRIVEWAYS (CONC) (HES) SY	531 6002 CONC SIDEWALKS (5") SY	531 6004 CURB RAMPS (TY 1) EA	531 6005 CURB RAMPS (TY 2) EA
	CSJ 0055-15-072													
59	AT CENTERPOINT	14	41		15							139	1	
60	BETWEEN CENTERPOINT AND LAKE AIR DRIVE				251					287		327		
61	AT LAKE AIR DRIVE	8								100		127		
62	AT FACTORY DR									141		39		
63	AT NORTH INDUSTRIAL DR				20					287		232		
64	AT TOWNE OAKS DR				49					243		172	2	1
65	BETWEEN TOWNE OAKS DR AND VILLA DR				363			14		320		313		
66	AT VILLA DRIVE				367			28		203		349		
67	AT SUN VALLEY DR	14								321		314	2	
68	BETWEEN SUN VALLEY DR AND ESTER ST					24				223		300		
69	AT ESTER ST				183		80	28		278		252	1	2
70	AT N NEW RD				87			14		124		178	2	
71	BETWEEN N NEW RD AND LOOP 396 (N VALLEY MILLS DR)		37							62		337		
72	AT LOOP 396 (N VALLEY MILLS RD)	28								48		288	2	
73	AT N 43RD ST	54	60		262					124		167	2	1
74	AT N 42RD ST		103	6						134		164	1	
75	AT N 41ST ST		52							527		75		
76	AT N 40TH ST		60	9						599		71		
77	AT N 39TH ST		35	5						288		201		
78	AT N 38TH ST		45							230		188	1	
79	BETWEEN N 38TH ST AND N 37TH ST		139							736		215		1
80	AT N 37TH ST		71	13						413		272	2	
81	AT N 36TH ST		133							446		191		
82	AT N 35TH ST		65	8						208		296	1	
83	AT N 34TH ST		65							53		271	2	
84	AT N 33RD ST		52							167		229		
85	AT N 32ND ST		66	8						212		170	1	
86	AT N 31ST		58							101		250		
87	AT N 30TH ST		41	11						132		245		
88	AT 30TH ST		19							97		141		
89	AT N 29TH ST		8	9						135		302		
90	AT N 28TH ST									115		245		
91	AT N 27TH ST		42							32		321	2	
92	AT N 26TH ST		15	19						318		273	2	
93	AT N 25TH ST		59							633		218	1	
94	AT N 25TH ST		60	6						413		272	4	
95	AT N 24TH ST		19	37						165		232	1	
96	AT N 23RD ST		68	12								215		
97	AT N 22ND ST		62									133		
98	AT N 21ST ST		6	14						132		149	2	
99	AT N 20TH ST				63				15	105		62	2	1
100	BETWEEN N 20TH ST AN N 19TH ST											135		
101	AT N 19TH ST		13							129		274		2
102	AT N 18TH ST		9							110		158	5	
103	AT N 17TH ST		45									79	6	
104	AT N 16TH ST		37	45								100	2	
105	AT N 15TH ST		46	64						69		160		
106	AT NOVELTY ST			33								21		
107	AT N 14TH ST									95		3		
108	AT N 13TH ST		37	16						105		102	2	
109	AT N 12TH ST		24	31	60					259		281	1	3
110	AT N 11TH ST		114	17	86					160		310	1	
111	AT N 10TH ST		83							339		193	1	
112	AT N 9TH ST		189							139		352	1	
113	BETWEEN N 9TH ST AND N 8TH ST		10							40		14	1	
114	AT N 8TH ST		249							168		412		
115	BETWEEN N 8TH ST AND N 6TH ST		179							44		415		
116	AT N 6TH ST		154							109		153		2
117	AT N 5TH ST		5							337		218	6	
118	AT N 4TH ST		93	6						29		304	2	
119	AT N 3RD ST		28							29	43	365		
120	BETWEEN N 3RD ST AND N UNIVERSITY PARKS DR		33							139		318		
121	AT N UNIVERSITY PARKS DR											193		
122	AT DALLAS STREET		30									14	5	
123	AT PRESTON ST		60							158		63	1	
124	AT TURNER ST		204							171		238	6	
125	AT HOOD ST		67							278		193	4	
126	AT ROSE ST											2		
127	BETWEEN ROSE ST AND GARRISON ST									65		7		
128	AT GARRISON ST		16		73					246		147	2	
129	AT HUBERT ST		25	21								121		
130	AT DAWSON ST			15										
131	BETWEEN OLIVE ST AND FM 933 (CLIFTON ST)											44		
132	AT FM 933 (CLIFTON ST)		9	21						137		67	6	
151	INTERSECTION RECONSTRUCTION DETAILS													
	PROJECT TOTALS	118	3240	426	1879	24	80	84	15	12507	43	14391	86	13

Kimley»Horn F-928

© 2021

Texas Department of Transportation

QUANTITY SUMMARY

SHEET 4 OF 14

FED. RD. DIV. NO.	PROJECT ID.	HIGHWAY NO.
6	(SEE TITLE SHEET)	US 84

STATE	DIST.	COUNTY	SHEET NO.
TEXAS	WAC	MCLENNAN	13
CONT.	SECT.	JOB	
0055	15	072	

FILENAME: pw:\\kh-pw.bentley.com:kh-pw-01\Documents\01 Active Projects\TX-FTW-063586010 - US 84 (Waco Drive)\WAC 005515072\4 - Design\Plan Set\1. General\US84_GEN_SUM03A.dgn
PLOTTED: 12/21/2020

		ROADWAY SUMMARY (CONT.)												
SHEET NO.	LOCATION	531 6006 CURB RAMPS (TY 3) EA	531 6008 CURB RAMPS (TY 5) EA	531 6009 CURB RAMPS (TY 6) EA	531 6010 CURB RAMPS (TY 7) EA	531 6013 CURB RAMPS (TY 10) EA	531 6016 CURB RAMPS (TY 21) EA	531 6050 CONCRETE SIDEWALK (STEPS) SY	531 6057 CONC SIDEWALK (SPECIAL) (RETAINING WALL) SF	531 6059 SIDEWALK CURB DRAIN TY I EA	531 6060 SIDEWALK CURB DRAIN TY II EA	536 6002 CONC MEDIAN SY	542 6001 REMOVE METAL BEAM GUARD FENCE LF	542 6002 REMOVE TERMINAL ANCHOR SECTION EA
	CSJ 0055-15-072													
59	AT CENTERPOINT				4		1							
60	BETWEEN CENTERPOINT AND LAKE AIR DRIVE				1									
61	AT LAKE AIR DRIVE		2		1		3					13		
62	AT FACTORY DR										1			
63	AT NORTH INDUSTRIAL DR				2									
64	AT TOWNE OAKS DR			2		1								
65	BETWEEN TOWNE OAKS DR AND VILLA DR									1				1
66	AT VILLA DRIVE				2					2			25	2
67	AT SUN VALLEY DR				6		1							
68	BETWEEN SUN VALLEY DR AND ESTER ST								841					
69	AT ESTER ST								119	2				
70	AT N NEW RD									1				
71	BETWEEN N NEW RD AND LOOP 396 (N VALLEY MILLS DR)				2						2			
72	AT LOOP 396 (N VALLEY MILLS RD)				2		1					2		
73	AT N 43RD ST						4					3		
74	AT N 42RD ST					1								
75	AT N 41ST ST					1			761					
76	AT N 40TH ST					1			1231					
77	AT N 39TH ST					3			158					
78	AT N 38TH ST					2			1032					
79	BETWEEN N 38TH ST AND N 37TH ST	2							650					
80	AT N 37TH ST								372					
81	AT N 36TH ST	4			1	1			550			2		
82	AT N 35TH ST					1			938					
83	AT N 34TH ST													
84	AT N 33RD ST	1			2				993					
85	AT N 32ND ST	1				2			1174					
86	AT N 31ST	2				1			545					
87	AT N 30TH ST							1						
88	AT 30TH ST	1			1				91					
89	AT N 29TH ST	1	1			2								
90	AT N 28TH ST													
91	AT N 27TH ST	1			1				504					
92	AT N 26TH ST	1			3				103					
93	AT N 25TH ST			2										
94	AT N 25TH ST						1					16		
95	AT N 24TH ST	1				1								
96	AT N 23RD ST	2			1									
97	AT N 22ND ST													
98	AT N 21ST ST							3						
99	AT N 20TH ST													
100	BETWEEN N 20TH ST AN N 19TH ST													
101	AT N 19TH ST								210					
102	AT N 18TH ST				1		1		270			12		
103	AT N 17TH ST													
104	AT N 16TH ST				4				869					
105	AT N 15TH ST	3	1											
106	AT NOVELTY ST													
107	AT N 14TH ST													
108	AT N 13TH ST	2							768					
109	AT N 12TH ST	2			2				337					
110	AT N 11TH ST	3	1											
111	AT N 10TH ST	3												
112	AT N 9TH ST			1	1									
113	BETWEEN N 9TH ST AND N 8TH ST		1						1377					
114	AT N 8TH ST				1									
115	BETWEEN N 8TH ST AND N 6TH ST													
116	AT N 6TH ST				1				529					
117	AT N 5TH ST		1						387					
118	AT N 4TH ST		2	1		1			716			10		
119	AT N 3RD ST				2									
120	BETWEEN N 3RD ST AND N UNIVERSITY PARKS DR				2				1279					
121	AT N UNIVERSITY PARKS DR													
122	AT DALLAS STREET				1									
123	AT PRESTON ST													
124	AT TURNER ST													
125	AT HOOD ST													
126	AT ROSE ST													
127	BETWEEN ROSE ST AND GARRISON ST													
128	AT GARRISON ST			4					721			1		
129	AT HUBERT ST				1	1								
130	AT DAWSON ST													
131	BETWEEN OLIVE ST AND FM 933 (CLIFTON ST)													
132	AT FM 933 (CLIFTON ST)													
151	INTERSECTION RECONSTRUCTION DETAILS													
	PROJECT TOTALS	30	9	10	45	19	12	4	17525	6	3	59	25	3

FILENAME: pw:\\kh-pw.bentley.com:kh-pw-01\Documents\01 Active Projects\TX-FTW-063586010 - US 84 (Waco Drive)\WAC 005515072\4 - Design\Plan Set\1. General\US84_GEN_SUM03B.dgn
PLOTTED: 12/21/2020

Kimley»Horn F-928

© 2021

Texas Department of Transportation

QUANTITY SUMMARY

SHEET 5 OF 14

FED. RD. DIV. NO.	PROJECT ID.	HIGHWAY NO.
6	(SEE TITLE SHEET)	US 84

STATE	DIST.	COUNTY	SHEET NO.
TEXAS	WAC	MCLENNAN	14
CONT.	SECT.	JOB	
0055	15	072	

		ROADWAY SUMMARY (CONT.)							
SHEET NO.	LOCATION	544 6003 GUARDRAIL END TREATMENT (REMOVE) EA	644 6001 IN SM RD SN SUP&AM TY1OBWG(1) SA(P) EA	644 6004 IN SM RD SN SUP&AM TY1OBWG(1) SA(T) EA	644 6033 IN SM RD SN SUP&AM TYS80(1)SA (U) EA	644 6068 RELOCATE SM RD SN SUP&AM TY 10BWG EA	644 6076 REMOVE SM RD SN SUP&AM EA	658 6057 INSTL OM ASSM (OM-3R)(T WT)GND EA	658 6080 INSTL DEL ASSM (D-SW)SZ 1(WFLX)GND EA
	CSJ 0055-15-072								
59	AT CENTERPOINT								
60	BETWEEN CENTERPOINT AND LAKE AIR DRIVE		1						
61	AT LAKE AIR DRIVE		2						
62	AT FACTORY DR								
63	AT NORTH INDUSTRIAL DR		1				1		
64	AT TOWNE OAKS DR		3				1		
65	BETWEEN TOWNE OAKS DR AND VILLA DR	1							
66	AT VILLA DRIVE								
67	AT SUN VALLEY DR								
68	BETWEEN SUN VALLEY DR AND ESTER ST		1				2		
69	AT ESTER ST		1				1		
70	AT N NEW RD		1				1		
71	BETWEEN N NEW RD AND LOOP 396 (N VALLEY MILLS DR)		4				4		
72	AT LOOP 396 (N VALLEY MILLS RD)		3	1			4		
73	AT N 43RD ST		6				1		
74	AT N 42RD ST								
75	AT N 41ST ST								
76	AT N 40TH ST		1				1		
77	AT N 39TH ST		1				1		
78	AT N 38TH ST		2						
79	BETWEEN N 38TH ST AND N 37TH ST		1				1		
80	AT N 37TH ST								
81	AT N 36TH ST		1			1	1		
82	AT N 35TH ST								
83	AT N 34TH ST								
84	AT N 33RD ST								
85	AT N 32ND ST								
86	AT N 31ST		1				1		
87	AT N 30TH ST		3				3		
88	AT 30TH ST								
89	AT N 29TH ST		1						
90	AT N 28TH ST		1						
91	AT N 27TH ST								
92	AT N 26TH ST								
93	AT N 25TH ST					1			
94	AT N 25TH ST								
95	AT N 24TH ST								
96	AT N 23RD ST								
97	AT N 22ND ST								
98	AT N 21ST ST		1				1		
99	AT N 20TH ST								
100	BETWEEN N 20TH ST AN N 19TH ST		1				1		
101	AT N 19TH ST								
102	AT N 18TH ST		2		1		2		
103	AT N 17TH ST								
104	AT N 16TH ST		1				1		
105	AT N 15TH ST						1		
106	AT NOVELTY ST								
107	AT N 14TH ST								
108	AT N 13TH ST								
109	AT N 12TH ST		3				1		
110	AT N 11TH ST								
111	AT N 10TH ST								
112	AT N 9TH ST								
113	BETWEEN N 9TH ST AND N 8TH ST								
114	AT N 8TH ST								
115	BETWEEN N 8TH ST AND N 6TH ST		2			1	2		
116	AT N 6TH ST		1			1	1		
117	AT N 5TH ST		3				3		
118	AT N 4TH ST		3			1	3		
119	AT N 3RD ST		3			1	3		
120	BETWEEN N 3RD ST AND N UNIVERSITY PARKS DR		1				1		
121	AT N UNIVERSITY PARKS DR		2	1			3	1	3
122	AT DALLAS STREET		1						
123	AT PRESTON ST								
124	AT TURNER ST								
125	AT HOOD ST		1				1		
126	AT ROSE ST								
127	BETWEEN ROSE ST AND GARRISON ST								
128	AT GARRISON ST								
129	AT HUBERT ST								
130	AT DAWSON ST								
131	BETWEEN OLIVE ST AND FM 933 (CLIFTON ST)								
132	AT FM 933 (CLIFTON ST)								
151	INTERSECTION RECONSTRUCTION DETAILS								
	PROJECT TOTALS	1	60	2	1	6	47	1	3

FILENAME: pw:\\kh-pw.bentley.com:kh-pw-01\Documents\01 Active Projects\TX-FTW-063586010 - US 84 (Waco Drive)\WAC 005515072\4 - Design\Plan Set\1. General\US84_GEN_SUM03C.dgn
PLOTTED: 12/21/2020

Kimley»Horn F-928

© 2021

Texas Department of Transportation

QUANTITY SUMMARY

SHEET 6 OF 14

FED.RD. DIV.NO.	PROJECT ID.	HIGHWAY NO.
6	(SEE TITLE SHEET)	US 84

STATE	DIST.	COUNTY	SHEET NO.
TEXAS	WAC	MCLENNAN	15
CONT.	SECT.	JOB	
0055	15	072	

		ROADWAY SUMMARY (CONT.)						
SHEET NO.	LOCATION	5008 6002 MOVE AND RESET PRECAST CONC WHEEL STOPS	5033 6001 FIXED BOLLARD	6027 6009 GROUND BOX (ADJUST)	6120 6001 DEAD END ROADWAY BARRICADE	7049 6120 REMOVE AND RELOCATE WTR METER AND VAULT	7049 6121 ADJUSTING METER VAULT	7049 6219 ADJUST OR RELOCATE WATER METER & BOX
		EA	EA	EA	LF	EA	EA	EA
	CSJ 0055-15-072							
59	AT CENTERPOINT	2		2				1
60	BETWEEN CENTERPOINT AND LAKE AIR DRIVE			1				1
61	AT LAKE AIR DRIVE			1				3
62	AT FACTORY DR							1
63	AT NORTH INDUSTRIAL DR						1	6
64	AT TOWNE OAKS DR							5
65	BETWEEN TOWNE OAKS DR AND VILLA DR							2
66	AT VILLA DRIVE							1
67	AT SUN VALLEY DR						1	
68	BETWEEN SUN VALLEY DR AND ESTER ST							4
69	AT ESTER ST	1		1				2
70	AT N NEW RD	1		1				1
71	BETWEEN N NEW RD AND LOOP 396 (N VALLEY MILLS DR)							
72	AT LOOP 396 (N VALLEY MILLS RD)						1	3
73	AT N 43RD ST	6						
74	AT N 42RD ST	17				1		
75	AT N 41ST ST							3
76	AT N 40TH ST							4
77	AT N 39TH ST							3
78	AT N 38TH ST							5
79	BETWEEN N 38TH ST AND N 37TH ST	3						5
80	AT N 37TH ST							2
81	AT N 36TH ST			1		1	1	5
82	AT N 35TH ST					3	1	2
83	AT N 34TH ST							1
84	AT N 33RD ST							5
85	AT N 32ND ST							1
86	AT N 31ST							
87	AT N 30TH ST							2
88	AT 30TH ST							4
89	AT N 29TH ST							1
90	AT N 28TH ST					1	1	
91	AT N 27TH ST							1
92	AT N 26TH ST	7						
93	AT N 25TH ST		2					5
94	AT N 25TH ST	16						16
95	AT N 24TH ST							
96	AT N 23RD ST							1
97	AT N 22ND ST							3
98	AT N 21ST ST	1						3
99	AT N 20TH ST							1
100	BETWEEN N 20TH ST AN N 19TH ST							
101	AT N 19TH ST					1		1
102	AT N 18TH ST	9						
103	AT N 17TH ST							1
104	AT N 16TH ST							1
105	AT N 15TH ST							2
106	AT NOVELTY ST							
107	AT N 14TH ST							
108	AT N 13TH ST	3						
109	AT N 12TH ST							1
110	AT N 11TH ST							
111	AT N 10TH ST							
112	AT N 9TH ST							1
113	BETWEEN N 9TH ST AND N 8TH ST							1
114	AT N 8TH ST				30			
115	BETWEEN N 8TH ST AND N 6TH ST							
116	AT N 6TH ST							1
117	AT N 5TH ST							
118	AT N 4TH ST							
119	AT N 3RD ST							
120	BETWEEN N 3RD ST AND N UNIVERSITY PARKS DR							
121	AT N UNIVERSITY PARKS DR							
122	AT DALLAS STREET							
123	AT PRESTON ST							
124	AT TURNER ST							1
125	AT HOOD ST	8						
126	AT ROSE ST	1						
127	BETWEEN ROSE ST AND GARRISON ST							
128	AT GARRISON ST							1
129	AT HUBERT ST							
130	AT DAWSON ST							
131	BETWEEN OLIVE ST AND FM 933 (CLIFTON ST)			1				
132	AT FM 933 (CLIFTON ST)							
151	INTERSECTION RECONSTRUCTION DETAILS							
	PROJECT TOTALS	75	2	8	30	7	6	114

FILENAME: pw:\\kh-pw.bentley.com:kh-pw-01\Documents\01 Active Projects\TX-FTW-063586010 - US 84 (Waco Drive)\WAC 005515072\4 - Design\Plan Set\1. General\US84_GEN_SUM03D.dgn
PLOTTED: 12/21/2020

Kimley»Horn F-928

© 2021

Texas Department of Transportation

QUANTITY SUMMARY

SHEET 7 OF 14

FED. RD. DIV. NO.	PROJECT ID.	HIGHWAY NO.
6	(SEE TITLE SHEET)	US 84

STATE	DIST.	COUNTY	SHEET NO.
TEXAS	WAC	MCLENNAN	16
CONT.	SECT.	JOB	
0055	15	072	

EARTHWORK SUMMARY		
	110	132
	6001	6003
LOCATION	EXCAVATION (ROADWAY)	EMBANKMENT (FINAL) (ORD COMP) (TY B)
	CY	CY
397+00 R1	4	0
398+00 R1	7	1
399+00 R1	6	3
42+57 R2	7	3
43+00 R2	8	0
44+00 R2	16	0
45+00 R2	9	0
46+00 R2	0	0
47+00 R2	5	0
48+00 R2	13	0
49+00 R2	8	0
50+00 R2	0	0
51+00 R2	0	0
52+00 R2	10	0
53+00 R2	14	0
54+00 R2	18	1
55+00 R2	28	1
56+00 R2	31	0
57+00 R2	50	0
58+00 R2	34	0
59+00 R2	21	0
60+00 R2	29	23
61+00 R2	15	84
62+00 R2	28	74
63+00 R2	25	50
64+00 R2	13	65
65+00 R2	9	28
66+00 R2	7	7
67+00 R2	12	19
68+00 R2	14	20
69+00 R2	8	11
70+00 R2	11	17
71+00 R2	16	17
72+00 R2	5	6
73+00 R2	18	6
74+00 R2	22	11
75+00 R2	5	12
76+00 R2	12	13
77+00 R2	28	6
78+00 R2	17	5
79+00 R2	1	5
80+00 R2	16	6
81+00 R2	20	6
82+00 R2	18	6
83+00 R2	20	6
84+00 R2	27	1
85+00 R2	31	2
86+00 R2	20	2
87+00 R2	10	0
88+00 R2	0	0
89+00 R2	8	2
90+00 R2	15	2
91+00 R2	13	0
92+00 R2	27	0
93+00 R2	29	0
94+00 R2	8	0
95+00 R2	0	0
96+00 R2	10	0
97+00 R2	39	0
98+00 R2	89	0
99+00 R2	73	0
100+00 R2	26	0
101+00 R2	35	0
102+00 R2	36	0
103+00 R2	24	0
104+00 R2	15	0
105+00 R2	8	1
106+00 R2	16	2
107+00 R2	32	85
108+00 R2	31	85
109+00 R2	11	1
110+00 R2	0	0
111+00 R2	50	1
112+00 R2	56	1

EARTHWORK SUMMARY		
	110	132
	6001	6003
LOCATION	EXCAVATION (ROADWAY)	EMBANKMENT (FINAL) (ORD COMP) (TY B)
	CY	CY
113+00 R2	21	0
114+00 R2	30	0
115+00 R2	32	0
116+00 R2	20	1
117+00 R2	20	1
118+00 R2	21	1
119+00 R2	18	1
120+00 R2	27	0
121+00 R2	38	0
122+00 R2	39	1
123+00 R2	42	1
124+00 R2	25	20
125+00 R2	5	30
126+00 R2	3	1
127+00 R2	20	0
128+00 R2	32	0
129+00 R2	21	0
130+00 R2	17	0
131+00 R2	19	2
132+00 R2	40	2
133+00 R2	48	1
134+00 R2	38	1
135+00 R2	31	0
136+00 R2	18	0
137+00 R2	11	1
138+00 R2	24	1
139+00 R2	40	20
140+00 R2	21	23
141+00 R2	200	1
142+00 R2	20	1
143+00 R2	12	0
144+00 R2	20	0
145+00 R2	15	0
146+00 R2	7	0
147+00 R2	15	0
148+00 R2	31	1
149+00 R2	22	5
150+00 R2	12	4
151+00 R2	16	0
152+00 R2	35	0
153+00 R2	49	0
154+00 R2	41	0
155+00 R2	37	0
156+00 R2	46	0
157+00 R2	39	1
158+00 R2	25	1
159+00 R2	13	0
160+00 R2	10	1
161+00 R2	21	1
162+00 R2	27	1
163+00 R2	15	1
164+00 R2	9	0
165+00 R2	22	1
166+00 R2	20	1
167+00 R2	10	1
168+00 R2	8	1
169+00 R2	14	1
170+00 R2	13	1
171+00 R2	4	1
172+00 R2	7	0
173+00 R2	12	0
174+00 R2	14	0
175+00 R2	8	0
176+00 R2	0	0
177+00 R2	8	0
178+00 R2	20	0
179+00 R2	12	0
180+00 R2	0	0
181+00 R2	0	0
182+00 R2	14	0
183+00 R2	14	0
184+00 R2	0	0
185+00 R2	0	0
186+00 R2	5	1

EARTHWORK SUMMARY		
	110	132
	6001	6003
LOCATION	EXCAVATION (ROADWAY)	EMBANKMENT (FINAL) (ORD COMP) (TY B)
	CY	CY
187+00 R2	9	1
188+00 R2	5	0
189+00 R2	9	2
190+00 R2	20	2
191+00 R2	18	1
192+00 R2	24	1
193+00 R2	17	1
194+00 R2	3	2
195+00 R2	6	2
196+00 R2	3	1
197+00 R2	0	0
198+00 R2	0	0
199+00 R2	0	0
200+00 R2	0	0
201+00 R2	0	0
202+00 R2	6	0
203+00 R2	12	0
204+00 R2	12	0
205+00 R2	6	0
206+00 R2	0	0
207+00 R2	0	0
208+00 R2	0	0
212+00 R2	5	0
213+00 R2	12	0
214+00 R2	18	0
215+00 R2	12	0
216+00 R2	21	0
217+00 R2	47	0
218+00 R2	39	1
219+00 R2	13	1
220+00 R2	0	0
221+00 R2	8	0
222+00 R2	16	0
223+00 R2	8	0
224+00 R2	16	0
225+00 R2	28	0
226+00 R2	19	0
227+00 R2	7	0
228+00 R2	19	0
229+00 R2	27	0
230+00 R2	24	0
231+00 R2	16	0
232+00 R2	20	0
233+00 R2	34	0
234+00 R2	14	0
235+00 R2	4	0
236+00 R2	16	1
237+00 R2	22	2
238+00 R2	12	3
239+00 R2	20	20
240+00 R2	24	20
241+00 R2	10	1
242+00 R2	16	1
243+00 R2	12	0
244+00 R2	0	0
245+00 R2	19	0
246+00 R2	38	0
247+00 R2	20	0
248+00 R2	12	0
249+00 R2	23	0
250+00 R2	28	20
251+00 R2	0	0
252+00 R2	16	20
253+00 R2	26	2
254+00 R2	26	0
255+00 R2	21	0
256+00 R2	0	0
257+00 R2	27	0
258+00 R2	34	0
259+00 R2	24	6
260+00 R2	20	14
261+00 R2	24	21
262+00 R2	10	13
263+00 R2	0	0

EARTHWORK SUMMARY		
	110	132
	6001	6003
LOCATION	EXCAVATION (ROADWAY)	EMBANKMENT (FINAL) (ORD COMP) (TY B)
	CY	CY
264+00 R2	0	0
265+00 R2	0	0
291+00 R2	11	0
292+00 R2	0	0
293+00 R2	54	40
294+00 R2	9	0
295+00 R2	9	0
296+00 R2	15	0
297+00 R2	6	0
298+00 R2	19	0
299+00 R2	25	0
300+00 R2	6	0
301+00 R2	0	0
302+00 R2	0	0
303+00 R2	0	0
304+00 R2	0	0
305+00 R2	0	0
306+00 R2	0	0
307+00 R2	0	0
308+00 R2	8	0
309+00 R2	25	1
310+00 R2	12	1
311+00 R2	0	0
312+00 R2	0	0
313+00 R2	20	0
314+00 R2	20	0
315+00 R2	0	0
316+00 R2	0	0
329+00 R2	0	1
330+00 R2	6	0
331+00 R2	16	0
332+00 R2	11	0
333+00 R2	0	0
334+00 R2	0	0
335+00 R2	0	0
PROJECT TOTAL	4409	1033

Kimley»Horn F-928

© 2021

Texas Department of Transportation

QUANTITY SUMMARY

SHEET 8 OF 14

FED.RD. DIV.NO.	PROJECT ID.	HIGHWAY NO.
6	(SEE TITLE SHEET)	US 84

STATE	DIST.	COUNTY	SHEET NO.
TEXAS	WAC	MCLENNAN	17
CONT.	SECT.	JOB	
0055	15	072	

FILENAME: pw:\\kh-pw.bentley.com:kh-pw-01\Documents\01 Active Projects\TX-FTW-063586010 - US 84 (Waco Drive)\WAC 005515072\4 - Design\Plan Set\1. General\US84_GEN_SUM00.dgn
PLOTTED: 12/21/2020

SUMMARY OF WORKZONE TRAFFIC CONTROL ITEMS								
LOCATION	512 6021	512 6022	512 6033	512 6034	512 6045	512 6046	6185 6002	6185 6003
	PORT CTB (DES SOURCE) (LOW PROF) (TY 1)	PORT CTB (DES SOURCE) (LOW PROF) (TY 2)	PORT CTB (MOVE) (LOW PROF) (TY 1)	PORT CTB (MOVE) (LOW PROF) (TY 2)	PORT CTB (STKPL) (LOW PROF) (TY 1)	PORT CTB (STKPL) (LOW PROF) (TY 2)	TMA (STATIONARY)	TMA (MOBILE OPERATION)
	LF	LF	LF	LF	LF	LF	DAY	HR
CSJ 0055-15-072 TOTAL	280	20	240	40	280	20	150	90
PROJECT TOTALS	280	20	240	40	280	20	150	90

SUMMARY OF DRAINAGE ITEMS							
LOCATION	464 6001	464 6008	465 6016	465 6158	465 6372	479 6006	496 6002
	RC PIPE (CL III) (12 IN)	RC PIPE (CL III) (36 IN)	INLET (COMPL) (PCO) (3FT) (BOTH)	INLET (COMPL) (PAZD) (FG) (3FTX3FT-3FTX3FT)	INLET (COMPL) (DROP) (SPL)	ADJUSTING INLET (CAP)	REMOV STR (INLET)
	LF	LF	EA	EA	EA	EA	EA
BETWEEN FACTORY DR AND N. INDUSTRIAL DR	12			1			
N. INDUSTRIAL DRIVE		9	1			1	
N. NEW ROAD					1		1
PROJECT TOTALS	12	9	1	1	1	1	1

SUMMARY OF BRIDGE ITEMS											
LOCATION	104 6009	403 6001	420 6136	432 6002	432 6033	450 6101	451 6064	462 6071	466 6171	466 6255	496 6091
	REMOVING CONC (RIPRAP)	TEMPORARY SPL SHORING	CL C CONC (RAC-R)	RIPRAP (CONC) (5 IN)	RIPRAP (STONE PROTECTION) (18 IN)	RAIL (TY C2P)	RETROFIT RAIL (TY C2P)	CONC BOX CULV (9 FT X 8 FT) (EXTEND)	WINGWALL (PW - 1) (HW=10 FT)	WINGWALL (PW-1) (HW=11FT) (MOD)	REMOV STR (CURB)
	SY	SF	CY	CY	CY	LF	LF	LF	EA	EA	EA
CULVERT #1 (WACO CREEK) NBI: 09-161-0-0055-15-052	250	1542		21	333	139		29	1	1	
CULVERT #2 (TRIB. OF WACO CREEK) NBI: 09-161-0-0055-15-049			11				44				1
PROJECT TOTALS	250	1542	11	21	333	139	44	29	1	1	1

Kimley»Horn F-928

© 2021

Texas Department of Transportation

QUANTITY SUMMARY

SHEET 9 OF 14

FED. RD. DIV. NO.	PROJECT ID.	HIGHWAY NO.
6	(SEE TITLE SHEET)	US 84

STATE	DIST.	COUNTY	SHEET NO.
TEXAS	WAC	MCLENNAN	
CONT.	SECT.	JOB	18
0055	15	072	

FILENAME: pw:\\kh-pw.bentley.com:kh-pw-01\Documents\01 Active Projects\TX-FTW-063586010 - US 84 (Waco Drive)\WAC 005515072\4 - Design\Plan Set\1. General\US84_GEN_SUM04.dgn
PLOTTED: 12/21/2020

SUMMARY OF TRAFFIC SIGNAL ITEMS

LOCATION	416 6031 DRILL SHAFT (TRF SIG POLE) (30 IN) LF	416 6032 DRILL SHAFT (TRF SIG POLE) (36 IN) LF	416 6034 DRILL SHAFT (TRF SIG POLE) (48 IN) LF	618 6023 CONDT (PVC) (SCH 40) (2") LF	618 6029 CONDT (PVC) (SCH 40) (3") LF	618 6046 CONDT (PVC) (SCH 80) (2") LF	618 6047 CONDT (PVC) (SCH 80) (2") (BORE) LF	618 6054 CONDT (PVC) (SCH 80) (3") (BORE) LF	620 6007 ELEC CONDR (NO.8) BARE LF	620 6008 ELEC CONDR (NO.8) INSULATED LF	620 6009 ELEC CONDR (NO.6) BARE LF	620 6010 ELEC CONDR (NO.6) INSULATED LF	624 6010 GROUND BOX TY D (162922)W /APRON EA	628 6144 ELC SRV TY D 120/240 060(NS)SS (E)PS(U) EA	680 6002 INSTALL HWY TRF SIG (ISOLATED) EA	680 6004 REMOVING TRAFFIC SIGNALS EA	680 6011 INSTALL HWY TRF SIG (UPGRADE) EA	682 6001 VEH SIG SEC (12")LED(GRN) EA	682 6002 VEH SIG SEC (12")LED(GRN ARW) EA	682 6003 VEH SIG SEC (12")LED(YEL) EA
CENTERPOINT DRIVE		13.2	65.7		70	15		840	900	650	10	20	6	1	1	1		11	5	11
LAKE AIR DRIVE	22.6		43.8		180	5		875	1040	240	25	50	12	1	1	1		12	8	12
TOWNE OAKS DRIVE	11.3	13.2	43.8		95		50	880	955	160	20	40	7	1	1	1		12	2	12
SUN VALLEY DRIVE		26.4	43.8		270	10		570	645	850	195	390	7	1	1	1		10	2	10
N. NEW ROAD					60				60				3				1	14	6	14
VALLEY MILLS DRIVE			87.6		60	15		915	970	1050	5	10	8	1	1	1		11	6	11
N. 38TH STREET	11.3	39.6			155	10		460	600	260	15	30	6	1	1	1		8	4	8
N. 36TH STREET	22.6	26.4		10	55		70	490	545	60	10	20	7	1	1	1		12	3	12
N. 29TH STREET	11.3	39.6		20	135		95	460	610	290	20	40	8	1	1	1		10	5	10
N. 26TH STREET		39.6			40	10		350	380	150	10	20	6	1	1	1		7	2	7
N. 25TH STREET	11.3	26.4			30	25		470	500	320	10	20	6	1	1	1		10	2	10
N. 18TH STREET	11.3	13.2	21.9		160	15		470	605	340	25	50	6	1	1	1		8	4	8
N. 17TH STREET	11.3	26.4			100	65		550	640	440	10	20	6	1	1	1		9	1	9
N. 15TH STREET	22.6	26.4			150	30		510	640	480	20	40	8	1	1	1		10	2	10
N. 12TH STREET	33.9	26.4		5	210	10		560	770	730	5	10	10	1	1	1		12	2	12
N. 11TH STREET		52.8			115	15		400	510	80	5	10	7	1	1	1		11	5	11
N. 9TH STREET	22.6	26.4			70	85		480	540	360	10	20	6	1	1	1		9	5	9
N. 5TH STREET		39.6			135		65	510	610	680	35	70	7	1	1	1		8	3	8
N. 4TH STREET		26.4	21.9		115		35	470	575	270	10	20	7	1	1	1		8	3	8
DALLAS STREET		39.6	21.9		75		40	510	575	300	10	20	7	1	1	1		10	5	10
TURNER STREET	22.6	26.4			150	30		655	740	820	65	130	8	1	1	1		11	2	11
GARRISON STREET	22.6		43.8		215	55		470	670	480	15	30	7	1	1	1		11	2	11
CLIFTON STREET	11.3	13.2	21.9		155	30		510	650	500	15	30	7	1	1	1		8	2	8
PROJECT TOTALS	248.6	541.2	416.1	35	2800	425	355	12405	14730	9510	545	1090	162	22	22	22	1	232	81	232

FILENAME: pw:\\kh-pw.bentley.com:kh-pw-01\Documents\01 Active Projects\TX-FTW-063586010 - US 84 (Waco Drive)\WAC 0055150724 - Design\Plan Set\1. General\US84_GEN_SUM05.dgn
PLOTTED: 12/21/2020

Kimley»Horn F-928

© 2021

Texas Department of Transportation

QUANTITY SUMMARY

SHEET 10 OF 14

FED.RD. DIV.NO.	PROJECT ID.	HIGHWAY NO.
6	(SEE TITLE SHEET)	US 84

STATE	DIST.	COUNTY	SHEET NO.
TEXAS	WAC	MCLENNAN	19
CONT.	SECT.	JOB	
0055	15	072	

	SUMMARY OF TRAFFIC SIGNAL ITEMS (CONT.)																		
LOCATION	682 6004 VEH SIG SEC (12")LED(YEL ARW)	682 6005 VEH SIG SEC (12")LED(R ED)	682 6006 VEH SIG SEC (12")LED(RED ARW)	682 6018 PED SIG SEC (LED)(COUN TDOWN)	682 6054 BACKPLATE W/REF BRDR(3 SEC)(VENT)ALUM	682 6055 BACKPLATE W/REF BRDR(4 SEC)(VENT)ALUM	682 6056 BACKPLATE W/REF BRDR(5 SEC)(VENT)ALUM	684 6007 TRF SIG CBL (TY A)(12 AWG)(2 CONDR)	684 6012 TRF SIG CBL (TY A)(12 AWG)(7 CONDR)	684 6021 TRF SIG CBL (TY A)(12 AWG)(16 CONDR)	684 6049 TRF SIG CBL (TY A)(16 AWG)(3 CONDR)	686 6025 INS TRF SIG PL AM (S)1 ARM(24')	686 6027 INS TRF SIG PL AM(S)1 ARM(24')LUM	686 6029 INS TRF SIG PL AM (S)1 ARM(28')	686 6031 INS TRF SIG PL AM(S)1 ARM(28')LUM	686 6033 INS TRF SIG PL AM(S)1 ARM(32')	686 6035 INS TRF SIG PL AM(S)1 ARM(32')LUM	686 6037 INS TRF SIG PL AM(S)1 ARM(36')	686 6039 INS TRF SIG PL AM(S)1 ARM(36')LUM
	EA	EA	EA	EA	EA	EA	EA	LF	LF	LF	LF	EA	EA	EA	EA	EA	EA	EA	EA
CENTERPOINT DRIVE	6	11	3	4	11	1	2	905	870	595	375								
LAKE AIR DRIVE	6	12	6	6	16	2		1120	695	1310	1180					1	1		
TOWNE OAKS DRIVE	2	12	2	6	14			1385	720	1010	1190	1						1	
SUN VALLEY DRIVE	2	10	2	6	12			1070	630	645	345							1	
N. NEW ROAD	10	14	4		12	4	2	1330	605		1390								
VALLEY MILLS DRIVE	6	11	6	6	17			1120	825	760	575								
N. 38TH STREET	8	8	4	6	8	4		650	545	380	490			1					
N. 36TH STREET	5	12	2	6	11	2	1	745	565	435	415	1			1				
N. 29TH STREET	9	10	4	6	9	4	1	770	540	460	785					1		1	
N. 26TH STREET	2	7	1	6	6	2		490	410	180	235							1	1
N. 25TH STREET	2	10	1	6	9	2		585	425	370	300					1			1
N. 18TH STREET	5	8	3	6	9	1	1	750	615	310	405								
N. 17TH STREET	2	9	1	6	9	1		1255	430	400	1260						1		
N. 15TH STREET	4	10	2	6	10	2		730	495	475	760	1		1					
N. 12TH STREET	2	12	2	6	14			1080	575	785	1110		1			1	1		
N. 11TH STREET	9	11	4	6	10	4	1	625	655	405	230								
N. 9TH STREET	9	9	4	6	8	4	1	715	530	380	535					1	1		
N. 5TH STREET	3	8	2	8	8	2		880	515	315	920								
N. 4TH STREET	3	8	2	8	8	2		970	505	360	775								
DALLAS STREET	9	10	4	6	9	4	1	595	625	425	225							1	1
TURNER STREET	4	11	2	6	11	2		1300	575	830	1330	2							
GARRISON STREET	4	11	2	6	11	2		870	600	575	750	1		1					
CLIFTON STREET	4	8	2	6	8	2		735	465	530	725			1					
PROJECT TOTALS	116	232	65	134	240	47	10	20675	13415	11935	16305	6	1	4	1	5	4	5	3

FILENAME: pw:\\kh-pw.bentley.com:kh-pw-01\Documents\01 Active Projects\TX-FTW-063586010 - US 84 (Waco Drive)\WAC 0055150721\4 - Design\Plan Set\1. General\US84_GEN_SUM06.dgn
PLOTTED: 12/21/2020

Kimley»Horn F-928

© 2021

Texas Department of Transportation

QUANTITY SUMMARY

SHEET 11 OF 14

FED.RD. DIV.NO.	PROJECT ID.	HIGHWAY NO.
6	(SEE TITLE SHEET)	US 84

STATE	DIST.	COUNTY	SHEET NO.
TEXAS	WAC	MCLENNAN	20
CONT.	SECT.	JOB	
0055	15	072	

SUMMARY OF TRAFFIC SIGNAL ITEMS (CONT.)																				
LOCATION	686 6041 INS TRF SIG PL AM(S)1 ARM(40')	686 6043 INS TRF SIG PL AM(S)1 ARM(40')LUM	686 6045 INS TRF SIG PL AM(S)1 ARM(44')	686 6047 INS TRF SIG PL AM(S)1 ARM(44')LUM	686 6049 INS TRF SIG PL AM(S)1 ARM(48')	686 6051 INS TRF SIG PL AM(S)1 ARM(48')LUM	686 6055 INS TRF SIG PL AM(S)1 ARM(50')LUM	686 6057 INS TRF SIG PL AM(S)1 ARM(55')	686 6059 INS TRF SIG PL AM(S)1 ARM(55')LUM	686 6063 INS TRF SIG PL AM(S)1 ARM(60')LUM	686 6065 INS TRF SIG PL AM(S)1 ARM(65')	686 6067 INS TRF SIG PL AM(S)1 ARM(65')LUM	686 6089 INS TRF SIG PL AM(S)2 ARM(28-28')	687 6001 PED POLE ASSEMBLY	687 6002 PEDESTRIAN PUSH BUTTON POLE	688 6001 PED DETECT PUSH BUTTON (APS)	688 6003 PED DETECTOR CONTROLLER UNIT	690 6006 REMOVAL OF GROUND BOXES	690 6009 REMOVAL OF CABLES	690 6024 REMOVAL OF SIGNAL HEAD ASSM
	EA	EA	EA	EA	EA	EA	EA	EA	EA	EA	EA	EA	EA	EA	EA	EA	EA	EA	LF	EA
CENTERPOINT DRIVE				1				1				2		2		4	1			
LAKE AIR DRIVE										1	1			6		6	1			
TOWNE OAKS DRIVE											1	1		3	1	6	1			
SUN VALLEY DRIVE		1							2					2	1	6	1			
N. NEW ROAD														3	1			3	350	22
VALLEY MILLS DRIVE									1	1		2		2	1	6	1			
N. 38TH STREET		1	1	1										3	1	6	1			
N. 36TH STREET			2											3		6	1			
N. 29TH STREET			1	1										3		6	1			
N. 26TH STREET					1									2		6	1			
N. 25TH STREET			1											2		6	1			
N. 18TH STREET						1					1		1	3	1	6	1			
N. 17TH STREET		1			1									4		6	1			
N. 15TH STREET		2												4		6	1			
N. 12TH STREET		1		1										6		6	1			
N. 11TH STREET	1		2	1										2		6	1			
N. 9TH STREET				1	1									2		6	1			
N. 5TH STREET				1		2								5		8	1			
N. 4TH STREET	1					1			1					4		8	1			
DALLAS STREET					1					1				2		6	1			
TURNER STREET			1	1										4		6	1			
GARRISON STREET							1	1						5		6	1			
CLIFTON STREET					1				1					5		6	1			
PROJECT TOTALS	2	6	8	8	5	4	1	2	5	3	3	5	1	77	6	134	22	3	350	22

SUMMARY OF TRAFFIC SIGNAL ITEMS (CONT.)												
LOCATION	690 6027 REMOVAL OF SIGNAL RELATED SIGNS	690 6030 REMOVAL OF PEDESTRIAN PUSH BUTTONS	690 6089 REMOVE PED POLE ASSM	690 6097 REMOVE SPREAD SPECTRUM ANTENNA	752 6015 TREE AND BRUSH REMOVAL	6027 6003 CONDUIT (PREPARE)	6027 6008 GROUND BOX (PREPARE)	6058 6001 BBU SYSTEM (EXTERNAL BATT CABINET)	6062 6038 ITS RADIO (DUAL)(5 GHZ/5 GHZ)-C-U	6306 6001 VIVDS PROSR SYS	6306 6002 VIVDS CAM ASSY FXD LNS	6306 6007 VIVDS CABLING
	EA	EA	EA	EA	AC	LF	EA	EA	EA	EA	EA	LF
CENTERPOINT DRIVE									1	1	4	875
LAKE AIR DRIVE								1	1	1	4	865
TOWNE OAKS DRIVE									1	1	4	1150
SUN VALLEY DRIVE									1	1	4	865
N. NEW ROAD	6	4	4	1		705	7	1	1			
VALLEY MILLS DRIVE								1	1	1	4	970
N. 38TH STREET									1	1	4	575
N. 36TH STREET									1	1	4	625
N. 29TH STREET									1	1	4	640
N. 26TH STREET					0.004			1	1	1	3	340
N. 25TH STREET								1	1	1	3	520
N. 18TH STREET					0.006			1	1	1	4	665
N. 17TH STREET								1	1	1	3	545
N. 15TH STREET									1	1	4	655
N. 12TH STREET									1	1	5	995
N. 11TH STREET									1	1	4	590
N. 9TH STREET									1	1	4	555
N. 5TH STREET								1	1	1	3	490
N. 4TH STREET								1	1	1	3	520
DALLAS STREET									1	1	4	620
TURNER STREET									1	1	4	1045
GARRISON STREET									1	1	4	765
CLIFTON STREET									1	1	4	710
PROJECT TOTALS	6	4	4	1	0.01	705	7	9	23	22	84	15580

Kimley»Horn F-928

© 2021

Texas Department of Transportation

QUANTITY SUMMARY

SHEET 12 OF 14

FED. RD. DIV. NO.	PROJECT ID.	HIGHWAY NO.
6	(SEE TITLE SHEET)	US 84

STATE	DIST.	COUNTY	SHEET NO.
TEXAS	WAC	MCLENNAN	21
CONT.	SECT.	JOB	
0055	15	072	

FILENAME: pw:\\kh-pw.bentley.com:kh-pw-01\Documents\01 Active Projects\TX-FTW-063586010 - US 84 (Waco Drive)\WAC 005515072\4 - Design\Plan Set\1. General\US84_GEN_SUM07.dgn
PLOTTED: 12/21/2020

SUMMARY OF SIGNING AND PAVEMENT MARKING ITEMS													
LOCATION	666 6006	666 6030	666 6036	666 6048	666 6099	666 6224	666 6226	666 6230	666 6300	666 6303	666 6315	668 6019	668 6020
	REFL PAV MRK TY I (W)4"(DOT)(100MIL)	REFL PAV MRK TY I (W)8"(DOT)(100MIL)	REFL PAV MRK TY I (W)8"(SLD)(100MIL)	REFL PAV MRK TY I (W)24"(SLD)(100MIL)	REF PAV MRK TY I(W)18"(YLD TRI)(100MIL)	PAVEMENT SEALER 4"	PAVEMENT SEALER 8"	PAVEMENT SEALER 24"	RE PM W/RET REQ TY I (W)4"(BRK)(100MIL)	RE PM W/RET REQ TY I (W)4"(SLD)(100MIL)	RE PM W/RET REQ TY I (Y)4"(SLD)(100MIL)	PREFAB PAV MRK TY B (W)(ARROW)	PREFAB PAV MRK TY B (W)(DBL ARROW)
	LF	LF	LF	LF	EA	LF	LF	LF	LF	LF	LF	EA	EA
CENTERPOINT DRIVE			850	475		1340	850	475	420	810	110	6	
LAKE AIR DRIVE			710	630		730	710	630	330		400	8	4
TOWNE OAKS DRIVE			580	490		880	580	490	480		400	5	
SUN VALLEY DRIVE			365	465		350	365	465	300		50	4	
N. NEW ROAD			1145	655		1250	1145	655	650		600	15	2
VALLEY MILLS DRIVE		305	1525	895	33	2055	1830	895	820	425	595	15	
N. 38TH STREET			340	400		520	340	400	120		410	4	2
N. 36TH STREET			355	360		310	355	360	150		160	4	1
N. 29TH STREET			555	365		550	555	365	130		420	7	2
N. 26TH STREET			100	350		280	100	350	280			2	2
N. 25TH STREET			170	355		290	170	355	290			2	
N. 18TH STREET			275	470		475	275	470	300	175		3	
N. 17TH STREET	52		315	360		360	315	360	290			5	1
N. 15TH STREET			215	380		670	215	380	180		490	2	
N. 12TH STREET			190	420		730	190	420	120	210	400	2	
N. 11TH STREET			485	400		710	485	400	110		600	6	2
N. 9TH STREET			620	415		580	620	415	180		400	10	4
N. 5TH STREET		20	145	580		325	165	580	260	65		2	2
N. 4TH STREET		46	265	580		380	311	580	220	160		2	4
DALLAS STREET			590	450		870	590	450	290		580	6	
TURNER STREET			115	400		620	115	400	220		400	2	
GARRISON STREET			140	370		605	140	370	300		305	2	
CLIFTON STREET			165	410		810	165	410	410		400	2	
NON-SIGNALIZED INTERSECTIONS				991				991					
PROJECT TOTALS	52	371	10215	11666	33	15690	10586	11666	6850	1845	6720	116	26

SUMMARY OF SIGNING AND PAVEMENT MARKING ITEMS (CONT.)											
LOCATION	668 6027	672 6007	672 6009	672 6010	677 6001	677 6003	677 6007	677 6008	677 6009	677 6012	677 6018
	PREFAB PAV MRK TY B (W)(WORD)	REFL PAV MRKR TY I-C	REFL PAV MRKR TY II-A-A	REFL PAV MRKR TY II-C-R	ELIM EXT PAV MRK & MRKS (4")	ELIM EXT PAV MRK & MRKS (8")	ELIM EXT PAV MRK & MRKS (24")	ELIM EXT PAV MRK & MRKS (ARROW)	ELIM EXT PAV MRK & MRKS (DBL ARROW)	ELIM EXT PAV MRK & MRKS (WORD)	ELIM EXT PAV MRK & MRKS (18")(YLD TRI)
	EA	EA	EA	EA	LF	LF	LF	EA	EA	EA	EA
CENTERPOINT DRIVE	3			50	1340	640	165	6		3	
LAKE AIR DRIVE	7	20	16	39	390	670	190	8	2	2	
TOWNE OAKS DRIVE	5		22	54	940	335	140	3		3	
SUN VALLEY DRIVE	2		4	31	350	350	335	4		2	
N. NEW ROAD	8	30	30	56	1270	1145	685	15	2	9	
VALLEY MILLS DRIVE	14	76	30	93	465	1830	225	15		14	38
N. 38TH STREET	4	9	24	18	520	340	115	6	4	4	
N. 36TH STREET	3	4	10	24	320	355	105	4	1	3	
N. 29TH STREET	5	12	24	24	400	630	225	7	4	4	
N. 26TH STREET	1			18	280	100	100	2	2	1	
N. 25TH STREET	2			27	290	170	70	1		1	
N. 18TH STREET	3			34	405	250	335	3		3	
N. 17TH STREET	3			33	325	265	260	8	2	5	
N. 15TH STREET	2		24	21	680	215	120	2		2	
N. 12TH STREET	2		20	18	720	200	410	2		2	
N. 11TH STREET	5	12	28	20	710	485	710	6	3	5	
N. 9TH STREET	6	10	20	30	140	545	144	8	4	6	
N. 5TH STREET	1			17	325	165	120	3	4	1	
N. 4TH STREET	2	3		30	380	311	265	3	4	2	
DALLAS STREET	6	10	26	35	1040	600	615	4		4	
TURNER STREET	2		20	23	640	115	550	2		2	
GARRISON STREET	2		16	23	665	140	500	2		2	
CLIFTON STREET	2		20	25	810	165	135	2		2	
NON-SIGNALIZED INTERSECTIONS											
PROJECT TOTALS	90	186	334	743	13405	10021	6519	116	32	82	38

Kimley»Horn F-928

© 2021

Texas Department of Transportation

QUANTITY SUMMARY

SHEET 13 OF 14

FED.RD. DIV.NO.	PROJECT ID.	HIGHWAY NO.
6	(SEE TITLE SHEET)	US 84

STATE	DIST.	COUNTY	SHEET NO.
TEXAS	WAC	MCLENNAN	22
CONT.	SECT.	JOB	
0055	15	072	

FILENAME: pw:\\kh-pw.bentley.com:kh-pw-01\Documents\01 Active Projects\TX-FTW-063586010 - US 84 (Waco Drive)\WAC 005515072\4 - Design\Plan Set\1. General\US84_GEN_SUM08.dgn
PLOTTED: 12/21/2020

SUMMARY OF EROSION CONTROL ITEMS						
SHEET NO.	LOCATION	506 6002 ROCK FILTER DAMS (INSTALL) (TY 2)	506 6011 ROCK FILTER DAMS (REMOVE)	506 6038 TEMP SEDMT CONT FENCE (INSTALL)	506 6039 TEMP SEDMT CONT FENCE (REMOVE)	7012 6001 CURB INLET SEDIMENT PROTECTION
		LF	LF	LF	LF	LF
	CSJ 0055-15-072					
62	AT FACTORY DR					20
63	AT NORTH INDUSTRIAL DR					60
64	AT TOWNE OAKS DR					40
66	AT VILLA DRIVE	100	100			
67	AT SUN VALLEY DR	15	15			
68	BETWEEN SUN VALLEY DR AND ESTER ST	10	10			
69	AT ESTER ST	10	10			
70	AT N NEW RD					85
71	BETWEEN N NEW RD AND LOOP 396 (N VALLEY MILLS DR)					10
76	AT N 40TH ST					10
77	AT N 39TH ST					10
78	AT N 38TH ST					70
80	AT N 37TH ST					25
81	AT N 36TH ST					15
82	AT N 35TH ST					20
83	AT N 34TH ST					20
84	AT N 33RD ST					30
85	AT N 32ND ST					10
87	AT N 30TH ST					10
88	AT 30TH ST					30
89	AT N 29TH ST					30
90	AT N 28TH ST					20
91	AT N 27TH ST					60
92	AT N 26TH ST					20
95	AT N 24TH ST					70
96	AT N 23RD ST					40
97	AT N 22ND ST					20
98	AT N 21ST ST					20
99	AT N 20TH ST					30
100	BETWEEN N 20TH ST AN N 19TH ST					10
101	AT N 19TH ST					10
102	AT N 18TH ST					20
103	AT N 17TH ST					20
104	AT N 16TH ST					20
105	AT N 15TH ST					30
107	AT N 14TH ST					15
109	AT N 12TH ST					40
110	AT N 11TH ST					40
111	AT N 10TH ST					50
112	AT N 9TH ST					30
113	BETWEEN N 9TH ST AND N 8TH ST					35
115	BETWEEN N 8TH ST AND N 6TH ST					20
116	AT N 6TH ST					10
117	AT N 5TH ST					20
119	AT N 3RD ST					40
120	BETWEEN N 3RD ST AND N UNIVERSITY PARKS DR			205	205	20
121	AT N UNIVERSITY PARKS DR			190	190	
122	AT DALLAS STREET					15
123	AT PRESTON ST					20
124	AT TURNER ST					40
125	AT HOOD ST					50
126	AT ROSE ST					40
129	AT HUBERT ST					25
131	BETWEEN OLIVE ST AND FM 933 (CLIFTON ST)					20
132	AT FM 933 (CLIFTON ST)					30
	PROJECT TOTALS	135	135	395	395	1445

NOTES:

1. CONTRACTOR TO PLACE EROSION CONTROL DEVICES AS SHOWN IN TA-BMP STANDARDS OR AS DIRECTED BY THE ENGINEER.

Kimley»Horn F-928

© 2021

Texas Department of Transportation

QUANTITY SUMMARY

SHEET 14 OF 14

FED.RD. DIV.NO.	PROJECT ID.	HIGHWAY NO.
6	(SEE TITLE SHEET)	US 84

STATE	DIST.	COUNTY	SHEET NO.
TEXAS	WAC	MCLENNAN	23
CONT.	SECT.	JOB	
0055	15	072	

FILENAME: pw:\\kh-pw.bentley.com:kh-pw-01\Documents\01 Active Projects\TX-FTW-063586010 - US 84 (Waco Drive)\WAC 005515072\4 - Design\Plan Set\1. General\US84_GEN_SUM09.dgn
PLOTTED: 12/21/2020

SUMMARY OF SMALL SIGNS

SM RD SGN ASSM TY XXXXX (X) XX (X-XXXX)

PLAN SHEET NO.	SIGN NO.	SIGN NOMENCLATURE	SIGN	DIMENSIONS	FLAT ALUMINUM (TYPE A)	EXAL ALUMINUM (TYPE G)	POST TYPE FRP = Fiberglass TWT = Thin-Wall 10BWG = 10 BWG S80 = Sch 80	POSTS 1 or 2	ANCHOR TYPE UA=Universal Conc UB=Universal Bolt SA=Slipbase-Conc SB=Slipbase-Bolt WS=Wedge Steel WP=Wedge Plastic	MOUNTING DESIGNATION PREFABRICATED P = "Plain" T = "T" U = "U"	1EXT or 2EXT = # of Ext BM = Extruded Wind Beam WC = 1.12 #/ft Wing Channel EXAL= Extruded Alum Sign Panels	BRIDGE MOUNT CLEARANCE SIGNS (See Note 2) TY = TYPE TY N TY S
60	2-1	R3-7R	RIGHT LANE MUST TURN RIGHT	36"X36"			10BWG	1	SA	P		
61	3-1	R3-8MS	ONLY	36"X30"			10BWG	1	SA	P		
61	3-2	R3-8MS	ONLY	36"X30"			10BWG	1	SA	P		
63	5-1	R2-1	SPEED LIMIT 45	30"X36"			10BWG	1	SA	P		
64	6-1	R2-1	SPEED LIMIT 45	30"X36"			10BWG	1	SA	P		
64	6-2	R3-7R	RIGHT LANE MUST TURN RIGHT	36"X36"			10BWG	1	SA	P		
64	6-3	R3-7R	RIGHT LANE MUST TURN RIGHT	36"X36"			10BWG	1	SA	P		
68	10-1	R1-1	STOP	36"X36"			10BWG	1	SA	P		
69	11-1	R7-107DBL	NO PARKING BUS STOP	12"X18"			10BWG	1	SA	P		
70	12-1	R3-7R	RIGHT LANE MUST TURN RIGHT	36"X36"			10BWG	1	SA	P		

DISCLAIMER:
The use of this standard is governed by the "Texas Engineering Practice Act". No warranty of any kind is made by TxDOT for any purpose whatsoever. TxDOT assumes no responsibility for the conversion of this standard to other formats or for incorrect results or damages resulting from its use.

DATE:
FILE:

ALUMINUM SIGN BLANKS THICKNESS	
Square Feet	Minimum Thickness
Less than 7.5	0.080"
7.5 to 15	0.100"
Greater than 15	0.125"

The Standard Highway Sign Designs for Texas (SHSD) can be found at the following website.

http://www.txdot.gov/

NOTE:

1. Sign supports shall be located as shown on the plans, except that the Engineer may shift the sign supports, within design guidelines, where necessary to secure a more desirable location or to avoid conflict with utilities. Unless otherwise shown on the plans, the Contractor shall stake and the Engineer will verify all sign support locations.
2. For installation of bridge mount clearance signs, see Bridge Mounted Clearance Sign Assembly (BMCS)Standard Sheet.
3. For Sign Support Descriptive Codes, see Sign Mounting Details Small Roadside Signs General Notes & Details SMD(GEN).

Scott R. Arnold, P.E.
03/01/2021

Texas Department of Transportation

Traffic Operations Division Standard

SUMMARY OF SMALL SIGNS

SHEET 1 OF 8

SOSS

FILE: sums16.dgn	DN: TxDOT	CK: TxDOT	DW: TxDOT	CK: TxDOT
©TxDOT May 1987	CONT	SECT	JOB	HIGHWAY
REVISIONS	0055	15	072	US 84
4-16	DIST	COUNTY		SHEET NO.
8-16	WAC	MCLENNAN		24

SUMMARY OF SMALL SIGNS

SM RD SGN ASSM TY XXXXX (X) XX (X-XXXX)

PLAN SHEET NO.	SIGN NO.	SIGN NOMENCLATURE	SIGN	DIMENSIONS	FLAT ALUMINUM (TYPE A)	EXAL ALUMINUM (TYPE G)	POST TYPE FRP = Fiberglass TWT = Thin-Wall 10BWG = 10 BWG S80 = Sch 80	POSTS 1 or 2	ANCHOR TYPE UA=Universal Conc UB=Universal Bolt SA=Slipbase-Conc SB=Slipbase-Bolt WS=Wedge Steel WP=Wedge Plastic	MOUNTING DESIGNATION PREFABRICATED P = "Plain" T = "T" U = "U"	1EXT or 2EXT = # of Ext BM = Extruded Wind Beam WC = 1.12 #/ft Wing Channel EXAL= Extruded Alum Sign Panels	BRIDGE MOUNT CLEARANCE SIGNS (See Note 2) TY = TYPE TY N TY S
		M2-1	JCT LOOP 396	21"X15"								
71	13-1						10BWG	1	SA	P		
		M1-6L-3		24"X24"								
71	13-2	R1-1	STOP	36"X36"			10BWG	1	SA	P		
71	13-3	R2-1	SPEED LIMIT 40	30"X36"			10BWG	1	SA	P		
		M3-4	WEST 84	24"X12"								
71	13-4						10BWG	1	SA	P		
		M1-4		24"X24"								
72	14-1	R1-2	YIELD	36"X36"X36"			10BWG	1	SA	P		
		M1-6L-3	LOOP 396	24"X24"								
72	14-2						10BWG	1	SA	P		
		M6-4		21"X15"								
		W11-2		36"X36"								
72	14-3						10BWG	1	SA	P		
		W16-7P		24"X12"								

ALUMINUM SIGN BLANKS THICKNESS	
Square Feet	Minimum Thickness
Less than 7.5	0.080"
7.5 to 15	0.100"
Greater than 15	0.125"

The Standard Highway Sign Designs for Texas (SHSD) can be found at the following website.

http://www.txdot.gov/

NOTE:

1. Sign supports shall be located as shown on the plans, except that the Engineer may shift the sign supports, within design guidelines, where necessary to secure a more desirable location or to avoid conflict with utilities. Unless otherwise shown on the plans, the Contractor shall stake and the Engineer will verify all sign support locations.
2. For installation of bridge mount clearance signs, see Bridge Mounted Clearance Sign Assembly (BMCS)Standard Sheet.
3. For Sign Support Descriptive Codes, see Sign Mounting Details Small Roadside Signs General Notes & Details SMD(GEN).

STATE OF TEXAS SCOTT R ARNOLD 96782 LICENSED PROFESSIONAL ENGINEER

Scott R Arnold, P.E.

03/01/2021

Texas Department of Transportation

Traffic Operations Division Standard

SUMMARY OF SMALL SIGNS

SHEET 2 OF 8

SOSS

FILE: sums16.dgn	DN: TxDOT	CK: TxDOT	DW: TxDOT	CK: TxDOT
©TxDOT May 1987	CONT	SECT	JOB	HIGHWAY
REVISIONS	0055	15	072	US 84
4-16	DIST	COUNTY		SHEET NO.
8-16	WAC	MCLENNAN		25

DISCLAIMER:
The use of this standard is governed by the "Texas Engineering Practice Act". No warranty of any kind is made by TxDOT for any purpose whatsoever. TxDOT assumes no responsibility for the conversion of this standard to other formats or for incorrect results or damages resulting from its use.

DATE:
FILE:

DISCLAIMER:
The use of this standard is governed by the "Texas Engineering Practice Act". No warranty of any kind is made by TxDOT for any purpose whatsoever. TxDOT assumes no responsibility for the conversion of this standard to other formats or for incorrect results or damages resulting from its use.

SUMMARY OF SMALL SIGNS

SM RD SGN ASSM TY XXXXX (X) XX (X-XXXX)

PLAN SHEET NO.	SIGN NO.	SIGN NOMENCLATURE	SIGN	DIMENSIONS	FLAT ALUMINUM (TYPE A)	EXAL ALUMINUM (TYPE G)	POST TYPE FRP = Fiberglass TWT = Thin-Wall 10BWG = 10 BWG S80 = Sch 80	POSTS 1 or 2	ANCHOR TYPE UA=Universal Conc UB=Universal Bolt SA=Slipbase-Conc SB=Slipbase-Bolt WS=Wedge Steel WP=Wedge Plastic	MOUNTING DESIGNATION PREFABRICATED P = "Plain" T = "T" U = "U"	1EXT or 2EXT = # of Ext BM = Extruded Wind Beam WC = 1.12 #/ft Wing Channel EXAL= Extruded Alum Sign Panels	BRIDGE MOUNT CLEARANCE SIGNS (See Note 2) TY = TYPE TY N TY S
		W11-2		36"X36"								
72	14-4						10BWG	1	SA	P		
		W16-7P		24"X12"								
		M1-6L-3		24"X24"								
73	15-1						10BWG	1	SA	P		
		M6-4		21"X15"								
		W11-2		36"X36"								
73	15-2						10BWG	1	SA	P		
		W16-7P		24"X12"								
		W11-2		36"X36"								
73	15-3						10BWG	1	SA	P		
		W16-7P		24"X12"								
73	15-4	R1-2		36"X36"X36"			10BWG	1	SA	P		
73	15-5	R1-2		36"X36"X36"			10BWG	1	SA	P		
		W11-2		36"X36"								
73	15-6						10BWG	1	SA	P		
		W16-7P		24"X12"								

ALUMINUM SIGN BLANKS THICKNESS	
Square Feet	Minimum Thickness
Less than 7.5	0.080"
7.5 to 15	0.100"
Greater than 15	0.125"

The Standard Highway Sign Designs for Texas (SHSD) can be found at the following website.

http://www.txdot.gov/

NOTE:

1. Sign supports shall be located as shown on the plans, except that the Engineer may shift the sign supports, within design guidelines, where necessary to secure a more desirable location or to avoid conflict with utilities. Unless otherwise shown on the plans, the Contractor shall stake and the Engineer will verify all sign support locations.
2. For installation of bridge mount clearance signs, see Bridge Mounted Clearance Sign Assembly (BMCS)Standard Sheet.
3. For Sign Support Descriptive Codes, see Sign Mounting Details Small Roadside Signs General Notes & Details SMD(GEN).

STATE OF TEXAS · SCOTT R. ARNOLD · 96782 · LICENSED · PROFESSIONAL ENGINEER

Scott R. Arnold, P.E.

03/01/2021

Texas Department of Transportation

Traffic Operations Division Standard

SUMMARY OF SMALL SIGNS

SHEET 3 OF 8

SOSS

FILE: sums16.dgn	DN: TxDOT	CK: TxDOT	DW: TxDOT	CK: TxDOT
©TxDOT May 1987	CONT	SECT	JOB	HIGHWAY
REVISIONS	0055	15	072	US 84
4-16	DIST	COUNTY		SHEET NO.
8-16	WAC	MCLENNAN		26

SUMMARY OF SMALL SIGNS

PLAN SHEET NO.	SIGN NO.	SIGN NOMENCLATURE	SIGN	DIMENSIONS	FLAT ALUMINUM (TYPE A)	EXAL ALUMINUM (TYPE G)	SM RD SGN ASSM TY XXXXX (X) XX (X-XXXX) POST TYPE FRP = Fiberglass TWT = Thin-Wall 10BWG = 10 BWG S80 = Sch 80	POSTS 1 or 2	ANCHOR TYPE UA=Universal Conc UB=Universal Bolt SA=Slipbase-Conc SB=Slipbase-Bolt WS=Wedge Steel WP=Wedge Plastic	MOUNTING DESIGNATION PREFABRICATED P = "Plain" T = "T" U = "U"	1EXT or 2EXT = # of Ext BM = Extruded Wind Beam WC = 1.12 #/ft Wing Channel EXAL= Extruded Alum Sign Panels	BRIDGE MOUNT CLEARANCE SIGNS (See Note 2) TY = TYPE TY N TY S
		M2-1	JCT	21"X15"								
76	18-1		LOOP 396				10BWG	1	SA	P		
		M1-6L-3		24"X24"								
		D9-2	H	24"X24"								
77	19-1						10BWG	1	SA	P		
		M6-3B		21"X15"								
78	20-1	R3-8LK	ONLY	36"X30"			10BWG	1	SA	P		
78	20-2	R3-8LK	ONLY	36"X30"			10BWG	1	SA	P		
79	21-1	R2-1	SPEED LIMIT 40	30"X36"			10BWG	1	SA	P		
79	21-2	R2-1	SPEED LIMIT 40	30"X36"			10BWG	1	SA	P		
81	23-1	R3-7R	RIGHT LANE MUST TURN RIGHT	30"X30"			10BWG	1	SA	P		
81	23-2	CUSTOM	"NEIGHBORHOOD WATCH" MATCH EXISTING SIGN				10BWG	1	SA	P	RELOCATE SMALL ROAD SIGN	
86	28-1	W1-4R		30"X30"			10BWG	1	SA	P		
87	29-1	R2-1	SPEED LIMIT 40	30"X36"			10BWG	1	SA	P		

ALUMINUM SIGN BLANKS THICKNESS	
Square Feet	Minimum Thickness
Less than 7.5	0.080"
7.5 to 15	0.100"
Greater than 15	0.125"

The Standard Highway Sign Designs for Texas (SHSD) can be found at the following website.

http://www.txdot.gov/

NOTE:

1. Sign supports shall be located as shown on the plans, except that the Engineer may shift the sign supports, within design guidelines, where necessary to secure a more desirable location or to avoid conflict with utilities. Unless otherwise shown on the plans, the Contractor shall stake and the Engineer will verify all sign support locations.
2. For installation of bridge mount clearance signs, see Bridge Mounted Clearance Sign Assembly (BMCS)Standard Sheet.
3. For Sign Support Descriptive Codes, see Sign Mounting Details Small Roadside Signs General Notes & Details SMD(GEN).

STATE OF TEXAS SCOTT R. ARMS 96782 LICENSED PROFESSIONAL ENGINEER

Scott R. Arms, P.E.

03/01/2021

Texas Department of Transportation

Traffic Operations Division Standard

SUMMARY OF SMALL SIGNS

SHEET 4 OF 8

SOSS

FILE: sums16.dgn	DN: TxDOT	CK: TxDOT	DW: TxDOT	CK: TxDOT
© TxDOT May 1987	CONT	SECT	JOB	HIGHWAY
REVISIONS	0055	15	072	US 84
4-16	DIST	COUNTY		SHEET NO.
8-16	WAC	MCLENNAN		27

18

DISCLAIMER:
The use of this standard is governed by the "Texas Engineering Practice Act". No warranty of any kind is made by TxDOT for any purpose whatsoever. TxDOT assumes no responsibility for the conversion of this standard to other formats or for incorrect results or damages resulting from its use.

DATE:
FILE:

SUMMARY OF SMALL SIGNS

SM RD SGN ASSM TY XXXXX (X) XX (X-XXXX)

PLAN SHEET NO.	SIGN NO.	SIGN NOMENCLATURE	SIGN	DIMENSIONS	FLAT ALUMINUM (TYPE A)	EXAL ALUMINUM (TYPE G)	POST TYPE FRP = Fiberglass TWT = Thin-Wall 10BWG = 10 BWG S80 = Sch 80	POSTS 1 or 2	ANCHOR TYPE UA=Universal Conc UB=Universal Bolt SA=Slipbase-Conc SB=Slipbase-Bolt WS=Wedge Steel WP=Wedge Plastic	MOUNTING DESIGNATION PREFABRICATED P = "Plain" T = "T" U = "U"	1EXT or 2EXT = # of Ext BM = Extruded Wind Beam WC = 1.12 #/ft Wing Channel EXAL= Extruded Alum Sign Panels	BRIDGE MOUNT CLEARANCE SIGNS (See Note 2) TY = TYPE TY N TY S
87	29-2	W3-3		30"X30"			10BWG	1	SA	P		
87	29-3	S1-1		36"X36"			10BWG	1	SA	P		
89	31-2	R2-1		30"X36"			10BWG	1	SA	P		
90	32-1	R2-1		30"X36"			10BWG	1	SA	P		
93	35-1	CUSTOM	"WACO REGIONAL AIRPORT" ASSEMBLY MATCH EXISTING SIGN				10BWG	1	SA	P	RELOCATE SMALL ROAD SIGN	
98	40-1	R2-1		30"X36"			10BWG	1	SA	P		
100	42-1	M2-1		21"X15"			10BWG	1	SA	P		
		M1-6L-2		24"X24"								
100	44-1	M3-3 M3-4 M1-6L-2 M1-4 M6-1L M6-3	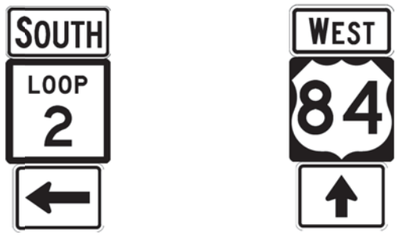	24"X12" 24"X12" 24"X24" 24"X24" 12"X9" 12"X9"			10BWG	1	SA	U		
100	44-2	R3-1		36"X36"			10BWG	1	SA	P		

ALUMINUM SIGN BLANKS THICKNESS	
Square Feet	Minimum Thickness
Less than 7.5	0.080"
7.5 to 15	0.100"
Greater than 15	0.125"

The Standard Highway Sign Designs for Texas (SHSD) can be found at the following website.

http://www.txdot.gov/

NOTE:

1. Sign supports shall be located as shown on the plans, except that the Engineer may shift the sign supports, within design guidelines, where necessary to secure a more desirable location or to avoid conflict with utilities. Unless otherwise shown on the plans, the Contractor shall stake and the Engineer will verify all sign support locations.
2. For installation of bridge mount clearance signs, see Bridge Mounted Clearance Sign Assembly (BMCS)Standard Sheet.
3. For Sign Support Descriptive Codes, see Sign Mounting Details Small Roadside Signs General Notes & Details SMD(GEN).

STATE OF TEXAS · SCOTT W. ARNOLD · 96782 · LICENSED · PROFESSIONAL ENGINEER

Scott W. Arnold, P.E.

03/01/2021

Texas Department of Transportation

Traffic Operations Division Standard

SUMMARY OF SMALL SIGNS

SHEET 5 OF 8

SOSS

FILE: sums16.dgn	DN: TxDOT	CK: TxDOT	DW: TxDOT	CK: TxDOT
© TxDOT May 1987	CONT	SECT	JOB	HIGHWAY
REVISIONS	0055	15	072	US 84
4-16 8-16	DIST	COUNTY		SHEET NO.
	WAC	MCLENNAN		28

DISCLAIMER:
The use of this standard is governed by the "Texas Engineering Practice Act". No warranty of any kind is made by TxDOT for any purpose whatsoever. TxDOT assumes no responsibility for the conversion of this standard to other formats or for incorrect results or damages resulting from its use.

DATE:
FILE:

SUMMARY OF SMALL SIGNS

SM RD SGN ASSM TY XXXXX (X) XX (X-XXXX)

PLAN SHEET NO.	SIGN NO.	SIGN NOMENCLATURE	SIGN	DIMENSIONS	FLAT ALUMINUM (TYPE A)	EXAL ALUMINUM (TYPE G)	POST TYPE FRP = Fiberglass TWT = Thin-Wall 10BWG = 10 BWG S80 = Sch 80	POSTS 1 or 2	ANCHOR TYPE UA=Universal Conc UB=Universal Bolt SA=Slipbase-Conc SB=Slipbase-Bolt WS=Wedge Steel WP=Wedge Plastic	MOUNTING DESIGNATION PREFABRICATED P = "Plain" T = "T" U = "U"	1EXT or 2EXT = # of Ext BM = Extruded Wind Beam WC = 1.12 #/ft Wing Channel EXAL= Extruded Alum Sign Panels	BRIDGE MOUNT CLEARANCE SIGNS (See Note 2) TY = TYPE TY N TY S
100	44-3	R3-7R		30"X30"			10BWG	1	SA	P		
		M3-2		24"X12"								
104	46-1						10BWG	1	SA	P		
		M1-4		24"X24"								
109	51-1	R2-1		30"X36"			10BWG	1	SA	P		
		W11-2	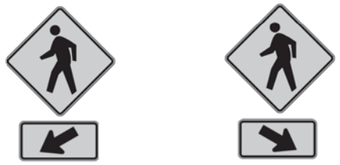	36"X36"								
		W11-2		36"X36"								
109	51-2						10BWG	1	SA	P		
		W16-7P		24"X12"								
		W16-7P		24"X12"								
		W11-2	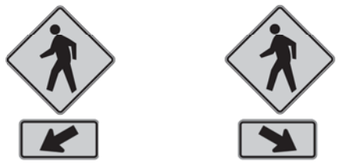	36"X36"								
		W11-2		36"X36"								
109	51-3						10BWG	1	SA	P		
		W16-7P		24"X12"								
		W16-7P		24"X12"								
115	57-1	R2-1		30"X36"			10BWG	1	SA	P		
115	57-2	CUSTOM	"TAYLOR MUSEUM OF WACO HISTORY" MATCH EXISTING SIGN				10BWG	1	SA	P	RELOCATE SMALL ROAD SIGN	
115	57-3	R2-1		30"X36"			10BWG	1	SA	P		

ALUMINUM SIGN BLANKS THICKNESS	
Square Feet	Minimum Thickness
Less than 7.5	0.080"
7.5 to 15	0.100"
Greater than 15	0.125"

The Standard Highway Sign Designs for Texas (SHSD) can be found at the following website.

http://www.txdot.gov/

NOTE:

1. Sign supports shall be located as shown on the plans, except that the Engineer may shift the sign supports, within design guidelines, where necessary to secure a more desirable location or to avoid conflict with utilities. Unless otherwise shown on the plans, the Contractor shall stake and the Engineer will verify all sign support locations.
2. For installation of bridge mount clearance signs, see Bridge Mounted Clearance Sign Assembly (BMCS)Standard Sheet.
3. For Sign Support Descriptive Codes, see Sign Mounting Details Small Roadside Signs General Notes & Details SMD(GEN).

Scott K Arnold P.E.

03/01/2021

Texas Department of Transportation

Traffic Operations Division Standard

SUMMARY OF SMALL SIGNS

SHEET 6 OF 8

SOSS

FILE:	sums16.dgn	DN: TxDOT	CK: TxDOT	DW: TxDOT	CK: TxDOT
© TxDOT	May 1987	CONT	SECT	JOB	HIGHWAY
REVISIONS		0055	15	072	US 84
4-16		DIST	COUNTY		SHEET NO.
8-16		WAC	MCLENNAN		29

18

DISCLAIMER:
The use of this standard is governed by the "Texas Engineering Practice Act". No warranty of any kind is made by TxDOT for any purpose whatsoever. TxDOT assumes no responsibility for the conversion of this standard to other formats or for incorrect results or damages resulting from its use.

DATE:
FILE:

SUMMARY OF SMALL SIGNS

SM RD SGN ASSM TY XXXXX (X) XX (X-XXXX)

PLAN SHEET NO.	SIGN NO.	SIGN NOMENCLATURE	SIGN	DIMENSIONS	FLAT ALUMINUM (TYPE A)	EXAL ALUMINUM (TYPE G)	POST TYPE FRP = Fiberglass TWT = Thin-Wall 10BWG = 10 BWG S80 = Sch 80	POSTS 1 or 2	ANCHOR TYPE UA=Universal Conc UB=Universal Bolt SA=Slipbase-Conc SB=Slipbase-Bolt WS=Wedge Steel WP=Wedge Plastic	MOUNTING DESIGNATION PREFABRICATED P = "Plain" T = "T" U = "U"	1EXT or 2EXT = # of Ext BM = Extruded Wind Beam WC = 1.12 #/ft Wing Channel EXAL= Extruded Alum Sign Panels	BRIDGE MOUNT CLEARANCE SIGNS (See Note 2) TY = TYPE TY N TY S
		M3-4	EAST 84	24"X12"								
116	58-1						10BWG	1	SA	P		
		M1-4		24"X24"								
116	58-2	CUSTOM	"CAMERON PARK ZOO" MATCH EXISTING SIGN				10BWG	1	SA	P	RELOCATE SMALL ROAD SIGN	
117	59-1	R6-1R	ONE WAY	36"X12"			10BWG	1	SA	P		
117	59-2	R3-7L	LEFT LANE MUST TURN LEFT	30"X30"			10BWG	1	SA	P		
117	59-3	R3-7L	LEFT LANE MUST TURN LEFT	30"X30"			10BWG	1	SA	P		
118	60-1	R2-1	SPEED LIMIT 40	30"X36"			10BWG	1	SA	P		
118	60-2	R5-1	DO NOT ENTER	36"X36"			10BWG	1	SA	P		
118	60-3	R3-7L	LEFT LANE MUST TURN LEFT	30"X30"			10BWG	1	SA	P		
118	60-4	CUSTOM	"LAKE WACO" MATCH EXISTING SIGN				10BWG	1	SA	P	RELOCATE SMALL ROAD SIGN	
119	61-1	CUSTOM	"FOLLOW ME TO THE ZOO" MATCH EXISTING SIGN				10BWG	1	SA	P	RELOCATE SMALL ROAD SIGN	
119	61-2	R3-7R	RIGHT LANE MUST TURN RIGHT	36"X36"			10BWG	1	SA	P		

ALUMINUM SIGN BLANKS THICKNESS	
Square Feet	Minimum Thickness
Less than 7.5	0.080"
7.5 to 15	0.100"
Greater than 15	0.125"

The Standard Highway Sign Designs for Texas (SHSD) can be found at the following website.

http://www.txdot.gov/

NOTE:

1. Sign supports shall be located as shown on the plans, except that the Engineer may shift the sign supports, within design guidelines, where necessary to secure a more desirable location or to avoid conflict with utilities. Unless otherwise shown on the plans, the Contractor shall stake and the Engineer will verify all sign support locations.
2. For installation of bridge mount clearance signs, see Bridge Mounted Clearance Sign Assembly (BMCS)Standard Sheet.
3. For Sign Support Descriptive Codes, see Sign Mounting Details Small Roadside Signs General Notes & Details SMD(GEN).

STATE OF TEXAS — SCOTT R. ARNOLD — 96752 — LICENSED — PROFESSIONAL ENGINEER

Scott R. Arnold, P.E.

03/01/2021

Texas Department of Transportation

Traffic Operations Division Standard

SUMMARY OF SMALL SIGNS

SHEET 7 OF 8

SOSS

FILE: sums16.dgn	DN: TxDOT	CK: TxDOT	DW: TxDOT	CK: TxDOT
© TxDOT May 1987	CONT	SECT	JOB	HIGHWAY
REVISIONS	0055	15	072	US 84
4-16 8-16	DIST	COUNTY		SHEET NO.
	WAC	MCLENNAN		30

DISCLAIMER:
The use of this standard is governed by the "Texas Engineering Practice Act". No warranty of any kind is made by TxDOT for any purpose whatsoever. TxDOT assumes no responsibility for the conversion of this standard to other formats or for incorrect results or damages resulting from its use.

DATE:
FILE:

18

SUMMARY OF SMALL SIGNS

SM RD SGN ASSM TY XXXXX (X) XX (X-XXXX)

PLAN SHEET NO.	SIGN NO.	SIGN NOMENCLATURE	SIGN	DIMENSIONS	FLAT ALUMINUM (TYPE A)	EXAL ALUMINUM (TYPE G)	POST TYPE FRP = Fiberglass TWT = Thin-Wall 10BWG = 10 BWG S80 = Sch 80	POSTS 1 or 2	ANCHOR TYPE UA=Universal Conc UB=Universal Bolt SA=Slipbase-Conc SB=Slipbase-Bolt WS=Wedge Steel WP=Wedge Plastic	MOUNTING DESIGNATION PREFABRICATED P = "Plain" T = "T" U = "U"	1EXT or 2EXT = # of Ext BM = Extruded Wind Beam WC = 1.12 #/ft Wing Channel EXAL= Extruded Alum Sign Panels	BRIDGE MOUNT CLEARANCE SIGNS (See Note 2) TY = TYPE TY N TY S
119	61-3	R3-7R	RIGHT LANE MUST TURN RIGHT	36"X36"			10BWG	1	SA	P		
		D9-2	H	24"X24"								
119	61-4						10BWG	1	SA	P		
		M6-3B	↑	12"X9"								
120	62-1	W8-13aT	BRIDGE MAY ICE IN COLD WEATHER	36"X36"			10BWG	1	SA	P		
121	63-1	R2-1	SPEED LIMIT 40	30"X36"			10BWG	1	SA	P		
121	63-2	R2-1	SPEED LIMIT 40	30"X36"			10BWG	1	SA	P		
121	63-3	I-3	BRAZOS RIVER	48"X"24			10BWG	1	SA	T		
122	64-1	R3-7R	RIGHT LANE MUST TURN RIGHT	36"X36"			10BWG	1	SA	P		
125	67-1	R2-1	SPEED LIMIT 40	30"X36"			10BWG	1	SA	P		

ALUMINUM SIGN BLANKS THICKNESS	
Square Feet	Minimum Thickness
Less than 7.5	0.080"
7.5 to 15	0.100"
Greater than 15	0.125"

The Standard Highway Sign Designs for Texas (SHSD) can be found at the following website.

http://www.txdot.gov/

NOTE:

1. Sign supports shall be located as shown on the plans, except that the Engineer may shift the sign supports, within design guidelines, where necessary to secure a more desirable location or to avoid conflict with utilities. Unless otherwise shown on the plans, the Contractor shall stake and the Engineer will verify all sign support locations.
2. For installation of bridge mount clearance signs, see Bridge Mounted Clearance Sign Assembly (BMCS)Standard Sheet.
3. For Sign Support Descriptive Codes, see Sign Mounting Details Small Roadside Signs General Notes & Details SMD(GEN).

STATE OF TEXAS SCOTT R. ARNOLD 96782 LICENSED PROFESSIONAL ENGINEER

Scott R. Arnold, P.E.

03/01/2021

Texas Department of Transportation

Traffic Operations Division Standard

SUMMARY OF SMALL SIGNS

SHEET 8 OF 8

SOSS

FILE: sums16.dgn	DN: TxDOT	CK: TxDOT	DW: TxDOT	CK: TxDOT
© TxDOT May 1987	CONT	SECT	JOB	HIGHWAY
REVISIONS	005	15	072	US 84
4-16	DIST	COUNTY		SHEET NO.
8-16	WAC	MCLENNAN		31

DISCLAIMER:
The use of this standard is governed by the "Texas Engineering Practice Act". No warranty of any kind is made by TxDOT for any purpose whatsoever. TxDOT assumes no responsibility for the conversion of this standard to other formats or for incorrect results or damages resulting from its use.

DATE:
FILE:

GENERAL NOTES

1. ADVANCE WARNING SIGNS SHALL REMAIN IN PLACE THROUGHOUT THE DURATION OF THE PROJECT. CONTRACTOR SHALL PLACE SIGNS IN ACCORDANCE WITH APPLICABLE BC STANDARDS AND THE LATEST TEXAS MANUAL OF UNIFORM TRAFFIC CONTROL DEVICES (TMUTCD).
2. ALL TRAFFIC CONTROL DEVICES SHALL BE INSTALLED IN ACCORDANCE WITH THE LATEST TEXAS MANUAL OF UNIFORM TRAFFIC CONTROL DEVICES (TMUTCD), TCP STANDARDS OR AS DIRECTED BY THE ENGINEER.
3. ADDITIONAL SIGNS, BARRICADES OR TRAFFIC CONTROL DEVICES OTHER THAN THOSE SPECIFIED MAY BE REQUIRED FOR THE SAFE MOVEMENT OF TRAFFIC THROUGH THE PROJECT. PAYMENT FOR ALL SUCH SIGNS, BARRICADES OR TRAFFIC CONTROL DEVICES WILL BE CONSIDERED SUBSIDIARY TO THE ITEM "BARRICADES, SIGNS AND TRAFFIC HANDLING".
4. WORK SITES SHOULD BE CAREFULLY MONITORED TO ENSURE THAT TRAFFIC CONTROL MEASURES ARE OPERATING EFFECTIVELY AND THAT ALL DEVICES USED ARE CLEARLY VISIBLE, CLEAN AND IN GOOD CONDITIONS.
5. ALL TEMPORARY EROSION AND SEDIMENT CONTROL DEVICES SHALL BE INSTALLED IN ACCORDANCE WITH APPLICABLE STANDARDS AND PRIOR TO ANY SOIL DISTURBING ACTIVITIES AND SHALL BE MAINTAINED THROUGHOUT THE PROJECT DURATION. SEDIMENT CONTROL DEVICES SHOULD REMAIN IN PLACE UNTIL THE END OF CONSTRUCTION OR AS APPROVED BY THE ENGINEER.
6. CONTRACTOR SHALL VERIFY EXISTING UTILITIES PRIOR TO CONSTRUCTION WITHIN A WORK AREA.
7. CONTRACTOR SHALL PROTECT ALL EXISTING STRUCTURES THAT ARE TO REMAIN IN-PLACE. IF ANY STRUCTURE IS DAMAGED DURING CONSTRUCTION, THE CONTRACTOR SHALL REPLACE OR REPAIR AT THE CONTRACTOR'S EXPENSE.
8. CONTRACTOR SHALL PROVIDE POSITIVE DRAINAGE THROUGHOUT THE CONSTRUCTION OF THE PROJECT. THE CONTRACTOR SHALL CORRECT DRAINAGE DEFICIENCIES THAT PRESENT A HAZARD TO THE TRAVELING PUBLIC OR PROPERTY AS DIRECTED BY THE ENGINEER.
9. SAFE ACCESS TO ADJOINING PROPERTIES MUST BE MAINTAINED AT ALL TIMES AND IN ALL WEATHER CONDITIONS. CONTRACTOR SHALL COORDINATE WITH ADJACENT PROPERTY OWNERS AT LEAST 5 DAYS PRIOR TO DRIVEWAY CONSTRUCTION. IF PROPERTY OWNER HAS MORE THAN ONE DRIVEWAY, CONSTRUCTION WILL ONLY BE PERMITTED ON ONE DRIVEWAY AT A TIME.
10. THE CONTRACTOR WILL BE REQUIRED TO SUBMIT A DETAILED SCHEDULE OF WORK PRIOR TO THE BEGINNING OF CONSTRUCTION WHICH GENERALLY CONFORMS TO THE SEQUENCE SHOWN ON THE TCP SEQUENCE OF WORK SHEET 2 OF 2.
11. COMPLETE ALL WORK ON PROJECT AS SHOWN ON THE VARIOUS PLAN SHEETS AND IN COMPLIANCE WITH THE GENERAL NOTES OF THIS CONTRACT.
12. CONTRACTOR SHALL CONSTRUCT SIDEWALK, CURB RAMPS, DRIVEWAYS, HANDRAILS, AND TRAFFIC SIGNALS IN ACCORDANCE WITH STANDARDS, LATEST TEXAS MANUAL OF UNIFORM TRAFFIC CONTROL DEVICES (TMUTCD), AND PROPOSED ACCESIBILITY GUIDELINES FOR PEDESTRIAN FACILITIES IN THE PUBLIC RIGHT-OF WAY (PROWAG).
13. CONTRACTOR SHALL MAINTAIN A 4' MIN CLEAR GROUND SPACE AT FIXTURE OBSTRUCTION.

GENERAL NOTES (CONTINUED)

14. CONTRACTOR SHALL ACCOMMODATE GRADING WITH MAINTAINABLE SIDE SLOPES OF 4:1 (TYP) AND 3:1 (MAX).
15. CONTRACTOR SHALL RELOCATE SIGNS WITHIN TXDOT RIGHT OF WAY. SIGNS SHALL BE ADJUSTED VERTICALLY IF THEY ARE CONSIDERED AN OBSTRUCTION IN VERTICAL PROTECTED ZONE.
16. CONTRACTOR SHALL MAINTAIN A 3:1 SAFETY SLOPE FOR EDGE CONDITION DROP OFFS GREATER THAN 2-IN AT THE END OF EVERY WORKING DAY. THIS WORK WILL BE CONSIDERED SUBSIDIARY TO ITEM 502.
17. UPON COMPLETION OF THE WORK AND BEFORE FINAL ACCEPTANCE AND FINAL PAYMENT IS MADE, THE CONTRACTOR SHALL CLEAR AND REMOVE FROM THE SITE ALL SURPLUS AND DISPLACED MATERIALS AND DEBRIS OF ANY KIND AND LEAVE THE ENTIRE PROJECT IN A SMOOTH, NEAT SIGHTLY CONDITION.
18. ANY REQUEST TO ALTER THE SEQUENCE OF OPERATION OR TRAFFIC CONTROL PLAN WILL BE SUBMITTED TO THE ENGINEER FOR WRITTEN APPROVAL.

US 84 AT CENTERPOINT

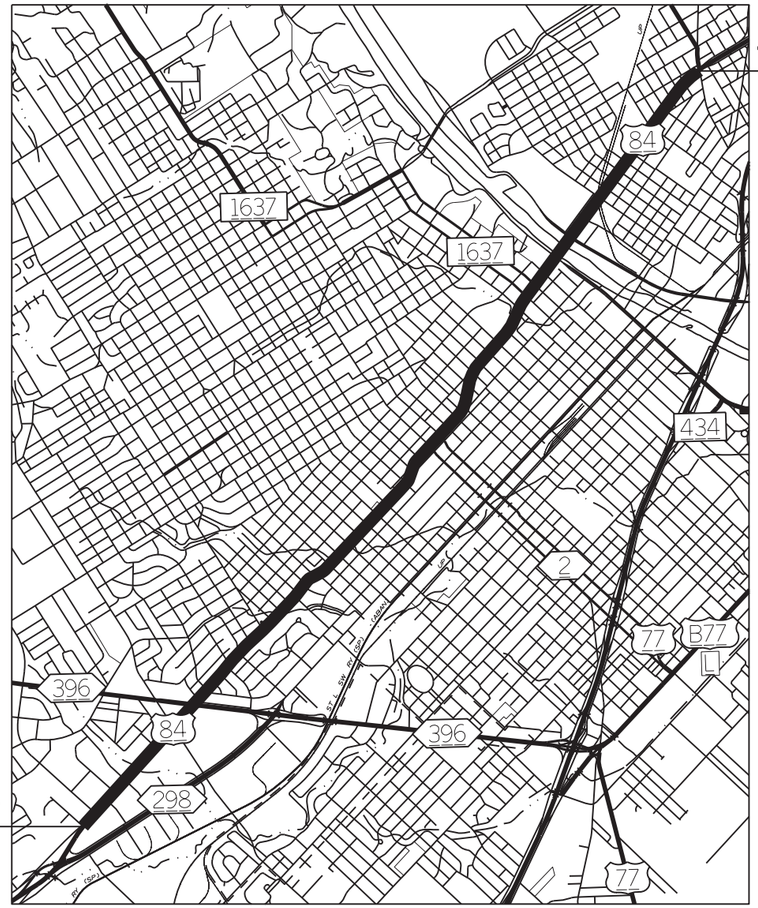

VICINITY MAP

YEAR	AADT
2018	35,488
2038	39,140

12/21/2020

Kimley»Horn F-928

© 2021

Texas Department of Transportation

TRAFFIC CONTROL PLAN NARRATIVE

SHEET 1 OF 2

FED.RD. DIV.NO.	PROJECT ID.		HIGHWAY NO.
6	(SEE TITLE SHEET)		US 84
STATE	DIST.	COUNTY	SHEET NO.
TEXAS	WAC	MCLENNAN	32
CONT.	SECT.	JOB	
0055	15	072	

FILENAME: pw:\\kh-pw.bentley.com:kh-pw-01\Documents\01 Active Projects\TX-FTW-063586010 - US 84 (Waco Drive)\WAC 005515072\4 - Design\Plan Set\2. TCP\US84_TCP_NARR01.dgn
PLOTTED: 12/21/2020

SEQUENCE OF WORK

PHASE 1A: CONSTRUCT SIDEWALK, SIGNING & STRIPING, AND SIGNAL IMPROVEMENTS WITH THE EXCEPTION OF THE AREA BETWEEN TOWNE OAKS DRIVE AND VILLA DRIVE.

THE CONTRACTOR MAY WORK IN MORE THAN ONE AREA AT A TIME, BUT THE WORK MUST PROGRESS AT EACH LOCATION.

1. PLACE TEMPORARY EROSION CONTROL DEVICES AS SHOWN IN THE STANDARDS AND AS DIRECTED BY THE ENGINEER, PRIOR TO BEGINNING WORK AT EACH LOCATION.
2. CONSTRUCT AND INSTALL SIGNALS:
   i. ORDER POLES AND OTHER SIGNAL EQUIPMENT FOR ALL LOCATIONS.
   ii. INSTALL UNDERGROUND EQUIPMENT.
   iii. INSTALL ABOVE GROUND EQUIPMENT.
   iv. REMOVE TRAFFIC SIGNAL.
3. CONSTRUCT SIDEWALKS, CURB AND GUTTER, CURB RAMPS, AND DRIVEWAYS AS SHOWN IN THE PLANS. IN THE EVENT THAT LANE CLOSURES ARE NEEDED, REFER TO APPLICABLE BC AND TCP STANDARDS.
4. AFTER CONSTRUCTION OF ALL PROPOSED ELEMENTS AT A GIVEN LOCATION, PLACE FINAL STRIPING AS SHOWN IN THE PLANS. INCLUDING ANY STRIPING THAT WAS REMOVED DURING CONSTRUCTION.
5. REMOVE EROSION CONTROL DEVICES AND PERFORM FINAL GRADING AND SODDING.

PHASE 1B: INSTALL RAC-R AND TRAFFIC RAIL AT TRIBUTARY OF WACO CREEK BRIDGE CLASS CULVERT.

1. PLACE ADVANCED WARNING SIGNS AS SHOWN IN THE STANDARDS AND AS DIRECTED BY THE ENGINEER.
2. PLACE TEMPORARY EROSION CONTROL DEVICES AS SHOWN IN THE STANDARDS AND AS DIRECTED BY THE ENGINEER.
3. COVER ANY CONFLICTING SIGNING AND MARKINGS. PLACE WORK ZONE SIGNING AND CHANNELIZING DEVICES PER TXDOT BC AND TCP STANDARDS, THE LATEST EDITION OF THE TEXAS MUTCD, AND AS DIRECTED BY THE ENGINEER.
4. CLOSE OUTER WESTBOUND LANE OF US 84 IN ACCORDANCE WITH TCP 2-4 AND INSTALL LOW PROFILE CONCRETE BARRIER.
5. REMOVE EXIST HANDRAIL AND INSTALL RAC-R, TRAFFIC RAIL, AND SIDEWALK AS SHOWN IN THE PLANS.

PHASE 2: EXTEND BRIDGE CLASS CULVERT AT WACO CREEK AND CONSTRUCT SIDEWALK FROM TOWNE OAKS DRIVE TO VILLA DRIVE

1. PLACE ADVANCED WARNING SIGNS AS SHOWN IN THE STANDARDS AND AS DIRECTED BY THE ENGINEER.
2. PLACE TEMPORARY EROSION CONTROL DEVICES AS SHOWN IN THE STANDARDS AND AS DIRECTED BY THE ENGINEER.
3. COVER ANY CONFLICTING SIGNING AND MARKINGS. PLACE WORK ZONE SIGNING AND CHANNELIZING DEVICES PER TXDOT BC AND TCP STANDARDS, THE LATEST EDITION OF THE TEXAS MUTCD, AND AS DIRECTED BY THE ENGINEER.
4. CLOSE OUTER EASTBOUND LANE OF US 84 IN ACCORDANCE WITH TCP 2-4 AND INSTALL LOW PROFILE CONCRETE BARRIER.
5. INSTALL TEMPORARY SPECIAL SHORING AND EXTEND CULVERT.
6. CONSTRUCT CURB AND GUTTER, SIDEWALK, AND DRIVEWAYS AS SHOWN IN THE PLANS
7. REPEAT STEPS 2-6 FOR THE WESTBOUND SIDE.

2 WAY VERTICAL PANELS WILL BE REQUIRED TO SIMULATE CENTERLINE.

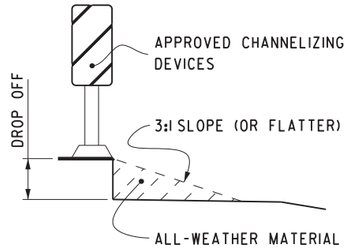

PAV EDGE DROP-OFF DETAIL

1. LESS THAN 2 INCHES: CW 8-11 SIGNS ARE REQUIRED.
2. GREATER THAN 2 INCHES BUT LESS THAN 24 INCHES: VERTICAL PANELS AND EITHER CW 8-9a OR CW 8-11 SIGNS ARE REQUIRED.
3. GREATER THAN 24 INCHES: POSITIVE BARRIER REQUIRED.
4. THE SAFETY SLOPE WILL BE CONSTRUCTED WITH AN ALL- WEATHER MATERIAL SUCH AS RAP, WHICH IS CLEAN AND FREE OF DEBRIS AND LARGE ROCKS.

1. SIGNS G20-1T WITH PLAQUE OR G20-5T, G20-6, G20-2a, G20-2b, CW20-1D, R20-3, R20-5, G20-9T AND R20-5 PLAQUE WILL BE REQUIRED AT PROJECT LIMITS.
2. CW20-1D AND G20-2a WILL BE REQUIRED AT ALL CROSSROADS.
3. G20-1a WILL BE REQUIRED AT ALL MAJOR CROSSROADS.

SIGNAGE LEGEND

G20-1T W/ PLAQUE OR G20-5T	48X18	BEGIN ROAD WORK NEXT X MILES
	48X24	BEGIN ROAD WORK NEXT X MILES
G20-6	48X30	NAME, ADDRESS, CITY, STATE, CONTRACTOR
G20-9T	36X30	BEGIN WORK ZONE
G20-2b	36X18	END WORK ZONE
R20-3	48X42	OBEY WARNING SIGNS STATE LAW
G20-1a	72X36	ROAD WORK NEXT X MILES
CW20-1D	48X48	ROAD WORK AHEAD
R20-5	36X36	TRAFFIC FINES DOUBLE
R20-5 PLAQUE	36X18	WHEN WORKERS ARE PRESENT
G20-2a	48X24	END ROAD WORK

12/21/2020

Kimley»Horn F-928

© 2021

Texas Department of Transportation

TRAFFIC CONTROL PLAN NARRATIVE

SHEET 2 OF 2

FED.RD. DIV.NO.	PROJECT ID.	HIGHWAY NO.
6	(SEE TITLE SHEET)	US 84

STATE	DIST.	COUNTY	SHEET NO.
TEXAS	WAC	MCLENNAN	33
CONT.	SECT.	JOB	
0055	15	072	

FILENAME: pw:\\kh-pw.bentley.com:kh-pw-01\Documents\01 Active Projects\TX-FTW-063586010 - US 84 (Waco Drive)\WAC 0055150721\4 - Design\Plan Set\2. TCP\US84_TCP_NARR02.dgn
PLOTTED: 12/21/2020

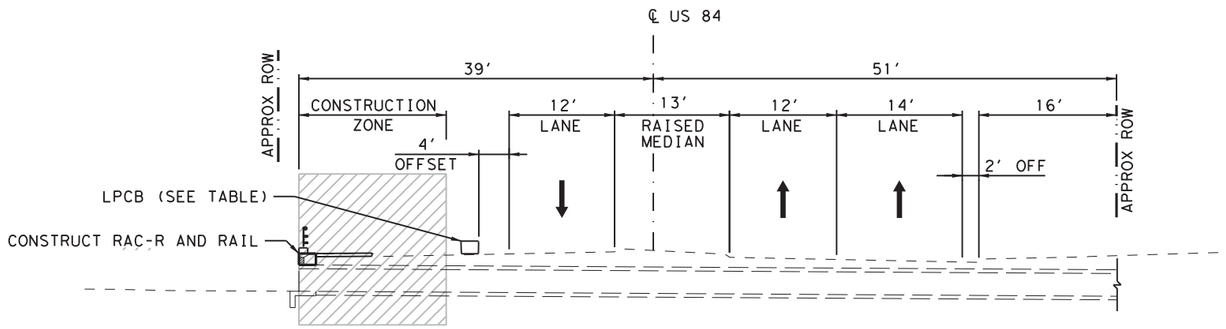

US 84 TCP PHASE 1B TYPICAL SECTION

AT TRIBUTARY OF WACO CREEK (WB SIDE)

LIMITS OF LPCB	
BEGIN LPCB	END LPCB
℄ US 84 STA 168+80	℄ US 84 STA 169+20

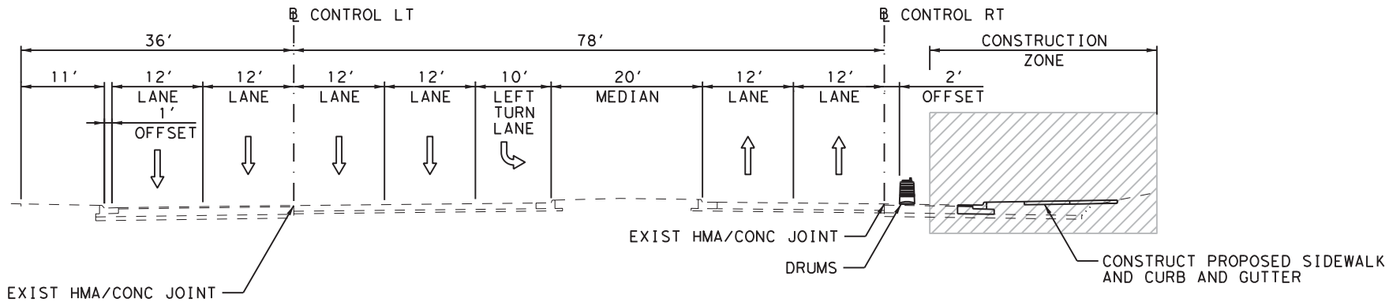

US 84 TCP PHASE 2 STEP 1 TYPICAL SECTION

INDUSTRIAL BLVD TO WACO CREEK CULVERT (EB SIDE)

LEGEND

- CURRENT PHASE CONSTRUCTION
- PREVIOUS PHASE CONSTRUCTION
- CHANNELIZING DEVICE (DRUMS)
- LOW PROFILE CONCRETE BARRIER

12/21/2020

Kimley»Horn F-928

© 2021

Texas Department of Transportation

TRAFFIC CONTROL PLAN TYPICAL SECTIONS

SCALE: NTS SHEET 1 OF 2

FED. RD. DIV. NO.	PROJECT ID.	HIGHWAY NO.
6	(SEE TITLE SHEET)	US 84

STATE	DIST.	COUNTY	SHEET NO.
TEXAS	WAC	MCLENNAN	34
CONT.	SECT.	JOB	
0055	15	072	

FILENAME: pw:\\kh-pw.bentley.com:kh-pw-01\Documents\01 Active Projects\TX-FTW-063586010 - US 84 (Waco Drive)\WAC 0055150721\4 - Design\Plan Set\2. TCP\US84_TCP_TYP01.dgn
PLOTTED: 12/21/2020

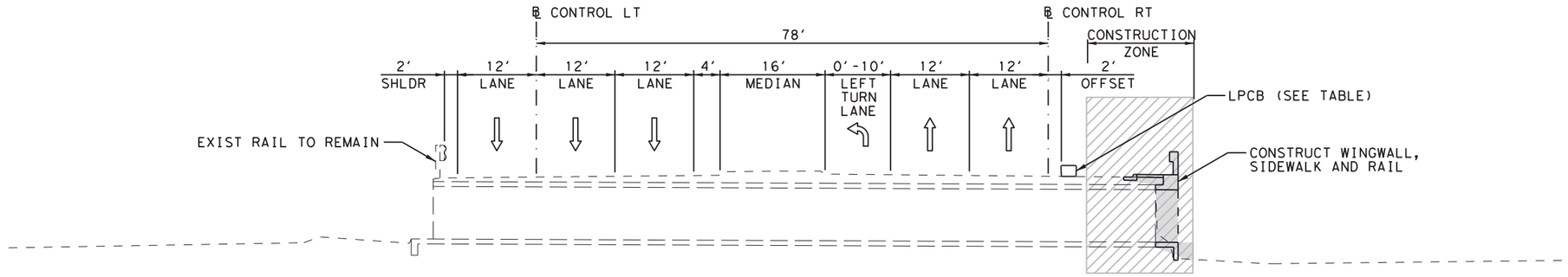

LEGEND

- CURRENT PHASE CONSTRUCTION
- PREVIOUS PHASE CONSTRUCTION
- CHANNELIZING DEVICE (DRUMS)
- LOW PROFILE CONCRETE BARRIER

US 84 TCP PHASE 2 STEP 1 TYPICAL SECTION

AT WACO CREEK CULVERT (EB SIDE)

LIMITS OF LPCB	
BEGIN LPCB	END LPCB
℄ CONTROL RT STA 103+80	℄ CONTROL RT STA 106+20

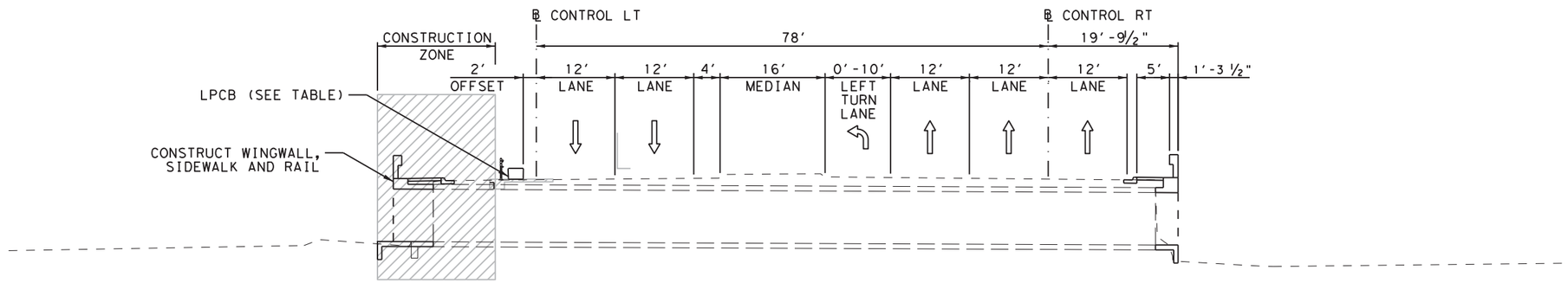

US 84 TCP PHASE 2 STEP 2 TYPICAL SECTION

AT WACO CREEK CULVERT (WB SIDE)

LIMITS OF LPCB	
BEGIN LPCB	END LPCB
℄ CONTROL LT STA 104+40	℄ CONTROL LT STA 106+80

12/21/2020

Kimley»Horn F-928

© 2021

Texas Department of Transportation

TRAFFIC CONTROL PLAN TYPICAL SECTIONS

SCALE: NTS SHEET 2 OF 2

FED. RD. DIV. NO.	PROJECT ID.	HIGHWAY NO.
6	(SEE TITLE SHEET)	US 84

STATE	DIST.	COUNTY	SHEET NO.
TEXAS	WAC	MCLENNAN	35
CONT.	SECT.	JOB	
0055	15	072	

FILENAME: pw:\\kh-pw.bentley.com:kh-pw-01\Documents\01 Active Projects\TX-FTW-063586010 - US 84 (Waco Drive)\WAC 005515072\4 - Design\Plan Set\2. TCP\US84_TCP_TYP02.dgn
PLOTTED: 12/21/2020

DISCLAIMER:
The use of this standard is governed by the "Texas Engineering Practice Act". No warranty of any kind is made by TxDOT for any purpose whatsoever. TxDOT assumes no responsibility for the conversion of this standard to other formats or for incorrect results or damages resulting from its use.

DATE:
FILE:

BARRICADE AND CONSTRUCTION (BC) STANDARD SHEETS GENERAL NOTES:

1. The Barricade and Construction Standard Sheets (BC sheets) are intended to show typical examples for placement of temporary traffic control devices, construction pavement markings, and typical work zone signs. The information contained in these sheets meet or exceed the requirements shown in the "Texas Manual on Uniform Traffic Control Devices" (TMUTCD).

2. The development and design of the Traffic Control Plan (TCP)is the responsibility of the Engineer.

3. The Contractor may propose changes to the TCP that are signed and sealed by a licensed professional engineer for approval. The Engineer may develop, sign and seal Contractor proposed changes.

4. The Contractor is responsible for installing and maintaining the traffic control devices as shown in the plans. The Contractor may not move or change the approximate location of any device without the approval of the Engineer.

5. Geometric design of lane shifts and detours should, when possible, meet the applicable design criteria contained in manuals such as the American Association of State Highway and Transportation Officials (AASHTO), "A Policy on Geometric Design of Highways and Streets," the TxDOT "Roadway Design Manual" or engineering judgment.

6. When projects abut, the Engineer(s) may omit the END ROAD WORK, TRAFFIC FINES DOUBLE, and other advance warning signs if the signing would be redundant and the work areas appear continuous to the motorists. If the adjacent project is completed first, the Contractor shall erect the necessary warning signs as shown on these sheets, the TCP sheets or as directed by the Engineer. The BEGIN ROAD WORK NEXT X MILES sign shall be revised to show appropriate work zone distance.

7. The Engineer may require duplicate warning signs on the median side of divided highways where median width will permit and traffic volumes justify the signing.

8. All signs shall be constructed in accordance with the details found in the "Standard Highway Sign Designs for Texas," latest edition. Sign details not shown in this manual shall be shown in the plans or the Engineer shall provide a detail to the Contractor before the sign is manufactured.

9. The temporary traffic control devices shown in the illustrations of the BC sheets are examples. As necessary, the Engineer will determine the most appropriate traffic control devices to be used.

10. As shown on BC(2), the OBEY WARNING SIGNS STATE LAW sign, STAY ALERT TALK OR TEXT LATER (see Sign Detail G20-10T) and the WORK ZONE TRAFFIC FINES DOUBLE sign with plaque shall be erected in advance of the CSJ limits. However, the TRAFFIC FINES DOUBLE sign will not be required on projects consisting solely of mobile operation work, such as striping or milling edgeline rumble strips. The BEGIN ROAD WORK NEXT X MILES, CONTRACTOR and END ROAD WORK signs shall be erected at or near the CSJ limits.

11. Except for devices required by Note 10, traffic control devices should be in place only while work is actually in progress or a definite need exists.

12. The Engineer has the final decision on the location of all traffic control devices.

13. Inactive equipment and work vehicles, including workers' private vehicles must be parked away from travel lanes. They should be as close to the right-of-way line as possible, or located behind a barrier or guardrail, or as approved by the Engineer.

WORKER SAFETY APPAREL NOTES:

1. Workers on foot who are exposed to traffic or to construction equipment within the right-of-way shall wear high-visibility safety apparel meeting the requirements of ISEA "American National Standard for High-Visibility Apparel," or equivalent revisions, and labeled as ANSI 107-2004 standard performance for Class 2 or 3 risk exposure. Class 3 garments should be considered for high traffic volume work areas or night time work.

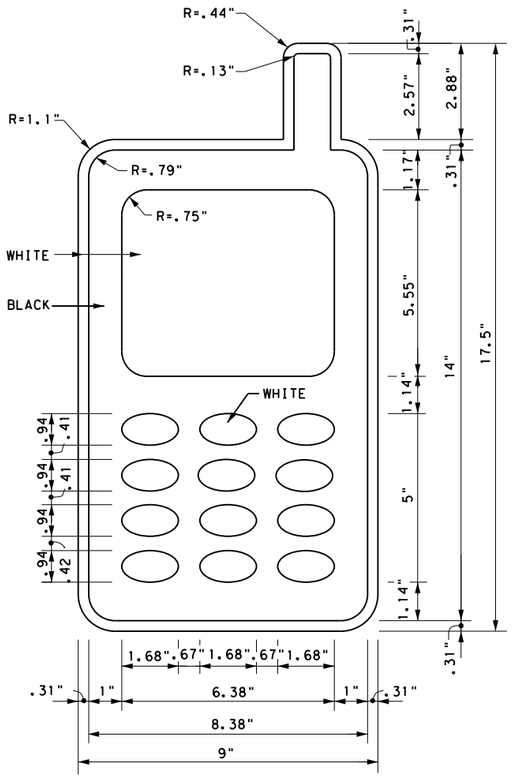

3.0" Radius, 1.25" Border, 0.75" Indent, Black on Yellow;
[STAY ALERT] Font: D
3.0" Radius, 1.25" Border, 0.75" Indent, Black on Orange;
[TALK OR TEXT LATER] Font: C specified length;

SIGN DETAIL (G20-10T)

Only pre-qualified products shall be used. The "Compliant Work Zone Traffic Control Devices List" (CWZTCD) describes pre-qualified products and their sources and may be found on-line at the web address given below or by contacting:

Texas Department of Transportation
Traffic Operations Division - TE
Phone (512) 416-3118

THE DOCUMENTS BELOW CAN BE FOUND ON-LINE AT http://www.txdot.gov
COMPLIANT WORK ZONE TRAFFIC CONTROL DEVICES LIST (CWZTCD)
DEPARTMENTAL MATERIAL SPECIFICATIONS (DMS)
MATERIAL PRODUCER LIST (MPL)
ROADWAY DESIGN MANUAL - SEE "MANUALS (ONLINE MANUALS)"
STANDARD HIGHWAY SIGN DESIGNS FOR TEXAS (SHSD)
TEXAS MANUAL ON UNIFORM TRAFFIC CONTROL DEVICES (TMUTCD)
TRAFFIC ENGINEERING STANDARD SHEETS

Texas Department of Transportation | Traffic Operations Division Standard

BARRICADE AND CONSTRUCTION GENERAL NOTES AND REQUIREMENTS

BC(1)-14

FILE: bc-14.dgn	DN: TxDOT	CK: TxDOT	DW: TxDOT	CK: TxDOT
© TxDOT November 2002	CONT	SECT	JOB	HIGHWAY
REVISIONS	0055	15	072	US 84
4-03 5-10 8-14	DIST	COUNTY		SHEET NO.
9-07 7-13	WAC	MCLENNAN		36

DISCLAIMER:
The use of this standard is governed by the "Texas Engineering Practice Act". No warranty of any kind is made by TxDOT for any purpose whatsoever. TxDOT assumes no responsibility for the conversion of this standard to other formats or for incorrect results or damages resulting from its use.

DATE:
FILE:

TYPICAL LOCATION OF CROSSROAD SIGNS

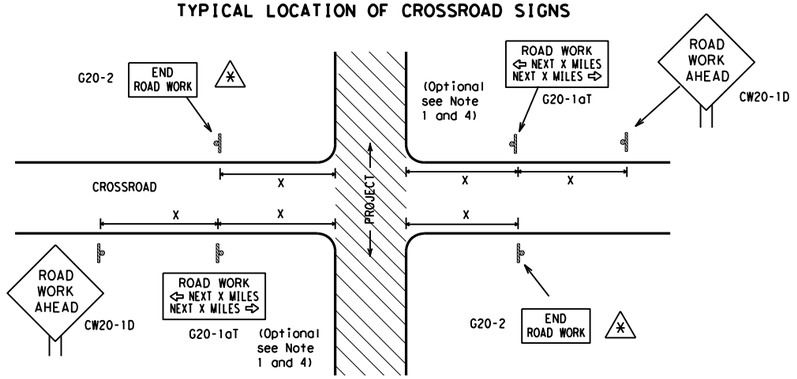

✱ May be mounted on back of "ROAD WORK AHEAD"(CW20-1D) sign with approval of Engineer. (See note 2 below)

1. The typical minimum signing on a crossroad approach should be a "ROAD WORK AHEAD" (CW20-1D)sign and a (G20-2) "END ROAD WORK" sign, unless noted otherwise in plans.
2. The Engineer may use the reduced size 36" x 36" ROAD WORK AHEAD (CW20-1D) sign mounted back to back with the reduced size 36" x 18" "END ROAD WORK"(G20-2) sign on low volume crossroads (see Note 4 under "Typical Construction Warning Sign Size and Spacing"). See the "Standard Highway Sign Designs for Texas" manual for sign details. The Engineer may omit the advance warning signs on low volume crossroads. The Engineer will determine whether a road is low volume. This information shall be shown in the plans.
3. Based on existing field conditions, the Engineer/Inspector may require additional signs such as FLAGGER AHEAD, LOOSE GRAVEL, or other appropriate signs. When additional signs are required, these signs will be considered part of the minimum requirements. The Engineer/Inspector will determine the proper location and spacing of any sign not shown on the BC sheets, Traffic Control Plan sheets or the Work Zone Standard Sheets.
4. The "ROAD WORK NEXT X MILES"(G20-1aT)sign shall be required at high volume crossroads to advise motorists of the length of construction in either direction from the intersection. The Engineer will determine whether a roadway is considered high volume.
5. Additional traffic control devices may be shown elsewhere in the plans for higher volume crossroads.
6. When work occurs in the intersection area, appropriate traffic control devices, as shown elsewhere in the plans or as determined by the Engineer/Inspector, shall be in place.

T-INTERSECTION

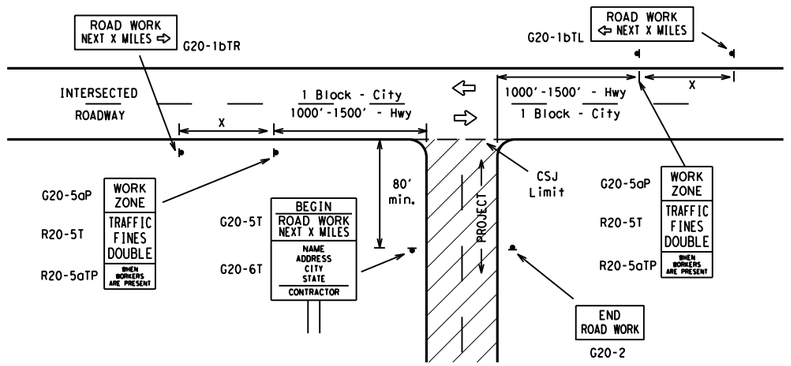

CSJ LIMITS AT T-INTERSECTION

1. The Engineer will determine the types and location of any additional traffic control devices, such as a flagger and accompanying signs, or other signs, that should be used when work is being performed at or near an intersection.
2. If construction closes the road at a T-intersection the Contractor shall place the "CONTRACTOR NAME"(G20-6T) sign behind the Type 3 Barricades for the road closure (see BC(10) also). The "ROAD WORK NEXT X MILES" left arrow(G20-1bTL) and "ROAD WORK NEXT X MILES" right arrow (G20-1bTR)" signs shall be replaced by the detour signing called for in the plans.

TYPICAL CONSTRUCTION WARNING SIGN SIZE AND SPACING[1,5,6]

SIZE

Sign Number or Series	Conventional Road	Expressway/ Freeway
CW20[4] CW21 CW22 CW23 CW25	48" x 48"	48" x 48"
CW1, CW2, CW7, CW8, CW9, CW11, CW14	36" x 36"	48" x 48"
CW3, CW4, CW5, CW6, CW8-3, CW10, CW12	48" x 48"	48" x 48"

SPACING

Posted Speed	Sign Spacing "X" △
MPH	Feet (Apprx.)
30	120
35	160
40	240
45	320
50	400
55	500[2]
60	600[2]
65	700[2]
70	800[2]
75	900[2]
80	1000[2]
✱	✱[3]

✱ For typical sign spacings on divided highways, expressways and freeways, see Part 6 of the "Texas Manual on Uniform Traffic Control Devices" (TMUTCD) typical application diagrams or TCP Standard Sheets.

△ Minimum distance from work area to first Advance Warning sign nearest the work area and/or distance between each additional sign.

GENERAL NOTES

1. Special or larger size signs may be used as necessary.
2. Distance between signs should be increased as required to have 1500 feet advance warning.
3. Distance between signs should be increased as required to have 1/2 mile or more advance warning.
4. 36" x 36" "ROAD WORK AHEAD" (CW20-1D)signs may be used on low volume crossroads at the discretion of the Engineer. See Note 2 under "Typical Location of Crossroad Signs".
5. Only diamond shaped warning sign sizes are indicated.
6. See sign size listing in "TMUTCD", Sign Appendix or the "Standard Highway Sign Designs for Texas" manual for complete list of available sign design sizes.

WORK AREAS IN MULTIPLE LOCATIONS WITHIN CSJ LIMITS

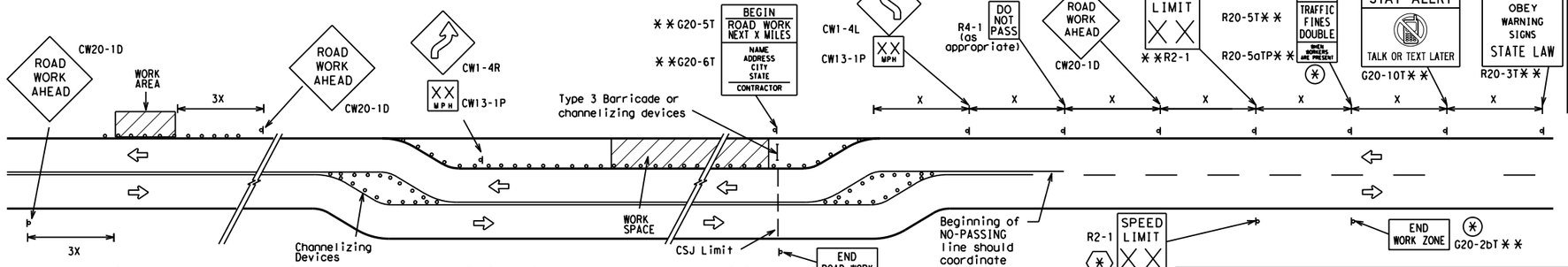

When extended distances occur between minimal work spaces, the Engineer/Inspector should ensure additional "ROAD WORK AHEAD"(CW20-1D)signs are placed in advance of these work areas to remind drivers they are still within the project limits. See the applicable TCP sheets for exact location and spacing of signs and channelizing devices.

SAMPLE LAYOUT OF SIGNING FOR WORK BEGINNING AT THE CSJ LIMITS

SAMPLE LAYOUT OF SIGNING FOR WORK BEGINNING DOWNSTREAM OF THE CSJ LIMITS

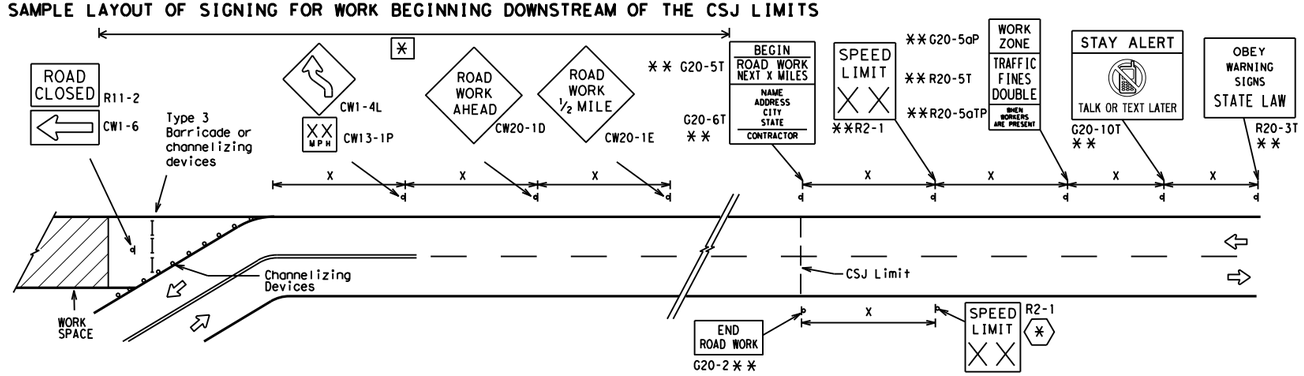

NOTES

The Contractor shall determine the appropriate distance to be placed on the G20-1 series signs and "BEGIN ROAD WORK NEXT X MILES"(G20-5T)sign for each specific project. This distance shall replace the "X" and shall be rounded to the nearest whole mile with the approval of the Engineer. No decimals shall be used.

(✱) The "BEGIN WORK ZONE"(G20-9TP) and "END WORK ZONE" (G20-2bT) shall be used as shown on the sample layout when advance signs are required outside the CSJ Limits. They inform the motorist of entering or leaving a part of the work zone lying outside the CSJ Limits where traffic fines may double if workers are present.

✱✱ Required CSJ Limit signing. See Note 10 on BC(1). TRAFFIC FINES DOUBLE signs will not be required on projects consisting solely of mobile operations work.

[✱] Area for placement of "ROAD WORK AHEAD" (CW20-1D)sign and other signs or devices as called for on the Traffic Control Plan.

(✱) Contractor will install a regulatory speed limit sign at the end of the work zone.

LEGEND	
⊢⊣	Type 3 Barricade
○○○	Channelizing Devices
▬	Sign
X	See Typical Construction Warning Sign Size and Spacing chart or the TMUTCD for sign spacing requirements.

SHEET 2 OF 12

Texas Department of Transportation

Traffic Operations Division Standard

BARRICADE AND CONSTRUCTION PROJECT LIMIT

BC(2)-14

FILE: bc-14.dgn	DN: TxDOT	CK: TxDOT	DW: TxDOT	CK: TxDOT
©TxDOT November 2002	CONT	SECT	JOB	HIGHWAY
REVISIONS	0055	15	072	US 84
9-07 8-14	DIST	COUNTY		SHEET NO.
7-13	WAC	MCLENNAN		37

DISCLAIMER:
The use of this standard is governed by the "Texas Engineering Practice Act". No warranty of any kind is made by TxDOT for any purpose whatsoever. TxDOT assumes no responsibility for the conversion of this standard to other formats or for incorrect results or damages resulting from its use.

DATE:
FILE:

TYPICAL APPLICATION OF WORK ZONE SPEED LIMIT SIGNS

Work zone speed limits shall be regulatory, established in accordance with the "Procedures for Establishing Speed Zones," and approved by the Texas Transportation Commission, or by City Ordinance when within Incorporated City Limits.

Reduced speeds should only be posted in the vicinity of work activity and not throughout the entire project.

Regulatory work zone speed signs (R2-1) shall be removed or covered during periods when they are not needed.

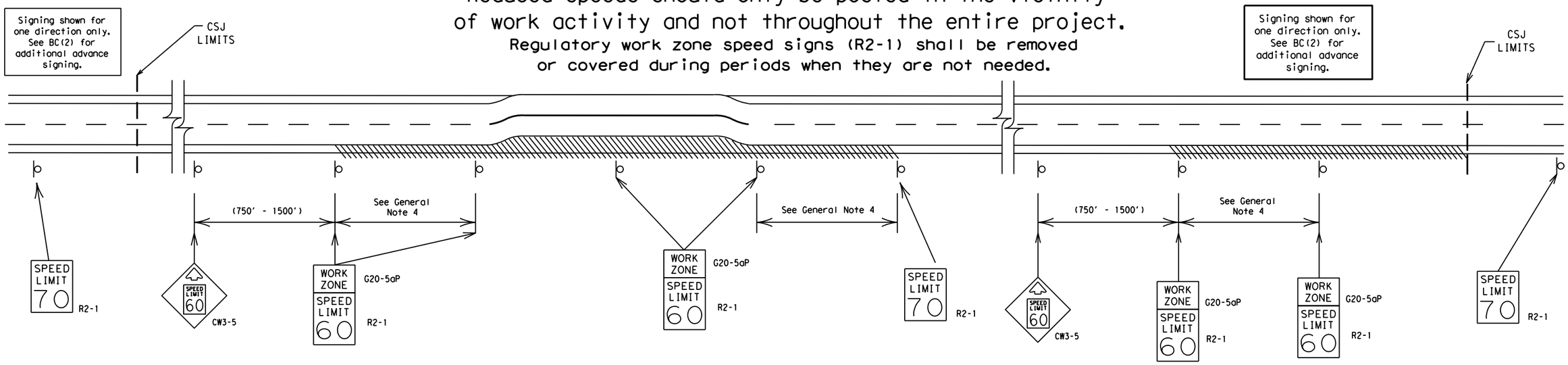

GUIDANCE FOR USE:

LONG/INTERMEDIATE TERM WORK ZONE SPEED LIMITS

This type of work zone speed limit should be included on the design of the traffic control plans when restricted geometrics with a lower design speed are present in the work zone and modification of the geometrics to a higher design speed is not feasible.

Long/Intermediate Term Work Zone Speed Limit signs, when approved as described above, should be posted and visible to the motorist when work activity is present. Work activity may also be defined as a change in the roadway that requires a reduced speed for motorists to safely negotiate the work area, including:

a) rough road or damaged pavement surface
b) substantial alteration of roadway geometrics (diversions)
c) construction detours
d) grade
e) width
f) other conditions readily apparent to the driver

As long as any of these conditions exist, the work zone speed limit signs should remain in place.

SHORT TERM WORK ZONE SPEED LIMITS

This type of work zone speed limit may be included on the design of the traffic control plans when workers or equipment are not behind concrete barrier, when work activity is within 10 feet of the traveled way or actually in the travelled way.

Short Term Work Zone Speed Limit signs should be posted and visible to the motorists only when work activity is present. When work activity is not present, signs shall be removed or covered.
(See Removing or Covering on BC(4)).

GENERAL NOTES

1. Regulatory work zone speed limits should be used only for sections of construction projects where speed control is of major importance.
2. Regulatory work zone speed limit signs shall be placed on supports at a 7 foot minimum mounting height.
3. Speed zone signs are illustrated for one direction of travel and are normally posted for each direction of travel.
4. Frequency of work zone speed limit signs should be:
   40 mph and greater 0.2 to 2 miles
   35 mph and less 0.2 to 1 mile
5. Regulatory speed limit signs shall have black legend and border on a white reflective background (See "Reflective Sheeting" on BC(4)).
6. Fabrication, erection and maintenance of the"ADVANCE SPEED LIMIT"(CW3-5)sign, "WORK ZONE"(G20-5aP) plaque and the "SPEED LIMIT"(R2-1)signs shall not be paid for directly, but shall be considered subsidiary to Item 502.
7. Turning signs from view, laying signs over or down will not be allowed, unless as otherwise noted under "REMOVING OR COVERING" on BC(4).
8. Techniques that may help reduce traffic speeds include but are not limited to:
   A. Law enforcement.
   B. Flagger stationed next to sign.
   C. Portable changeable message sign (PCMS).
   D. Low-power (drone) radar transmitter.
   E. Speed monitor trailers or signs.
9. Speeds shown on details above are for illustration only. Work Zone Speed Limits should only be posted as approved for each project.
10. For more specific guidance concerning the type of work, work zone conditions and factors impacting allowable regulatory construction speed zone reduction see TxDOT form #1204 in the TxDOT e-form system.

Texas Department of Transportation

Traffic Operations Division Standard

BARRICADE AND CONSTRUCTION WORK ZONE SPEED LIMIT

BC(3)-14

FILE: bc-14.dgn	DN: TxDOT	CK: TxDOT	DW: TxDOT	CK: TxDOT
©TxDOT November 2002	CONT	SECT	JOB	HIGHWAY
REVISIONS 9-07 8-14 7-13	0055	15	072	US 84
	DIST	COUNTY		SHEET NO.
	WAC	MCLENNAN		38

DISCLAIMER:
The use of this standard is governed by the "Texas Engineering Practice Act". No warranty of any kind is made by TxDOT for any purpose whatsoever. TxDOT assumes no responsibility for the conversion of this standard to other formats or for incorrect results or damages resulting from its use.

DATE:
FILE:

TYPICAL MINIMUM CLEARANCES FOR LONG TERM AND INTERMEDIATE TERM SIGNS

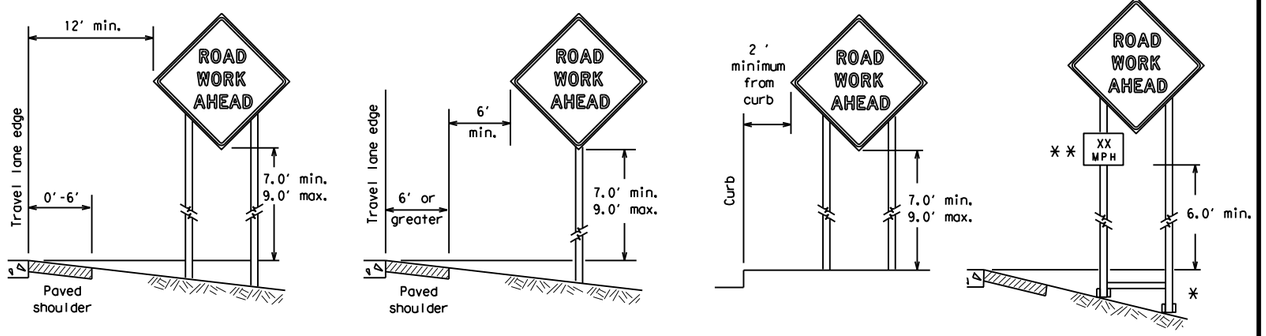

* When placing skid supports on unlevel ground, the leg post lengths must be adjusted so the sign appears straight and plumb. Objects shall NOT be placed under skids as a means of leveling.

** When plaques are placed on dual-leg supports, they should be attached to the upright nearest the travel lane. Supplemental plaques (advisory or distance) should not cover the surface of the parent sign.

ATTACHMENT FOR SIGN SUPPORTS

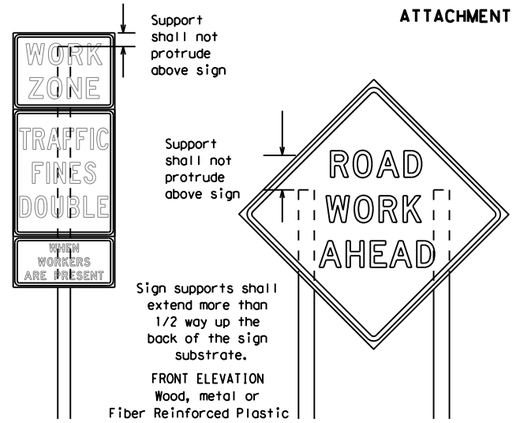

Splicing embedded perforated square metal tubing in order to extend post height will only be allowed when the splice is made using four bolts, two above and two below the spice point. Splice must be located entirely behind the sign substrate, not near the base of the support. Splice insert lengths should be at least 5 times nominal post size, centered on the splice and of at least the same gauge material.

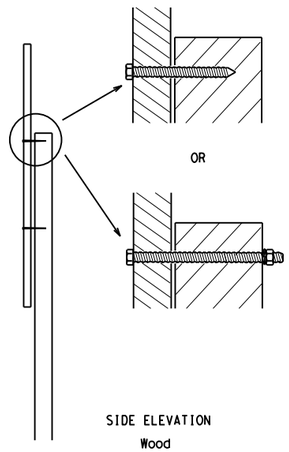

Attachment to wooden supports will be by bolts and nuts or screws. Use TxDOT's or manufacturer's recommended procedures for attaching sign substrates to other types of sign supports

Nails shall NOT be allowed. Each sign shall be attached directly to the sign support. Multiple signs shall not be joined or spliced by any means. Wood supports shall not be extended or repaired by splicing or other means.

STOP/SLOW PADDLES

1. STOP/SLOW paddles are the primary method to control traffic by flaggers. The STOP/SLOW paddle size should be 24" x 24" as detailed below.
2. When used at night, the STOP/SLOW paddle shall be retroreflectorized.
3. STOP/SLOW paddles may be attached to a staff with a minimum length of 6' to the bottom of the sign.
4. Any lights incorporated into the STOP or SLOW paddle faces shall only be as specifically described in Section 6E.03 Hand Signaling Devices in the TMUTCD.

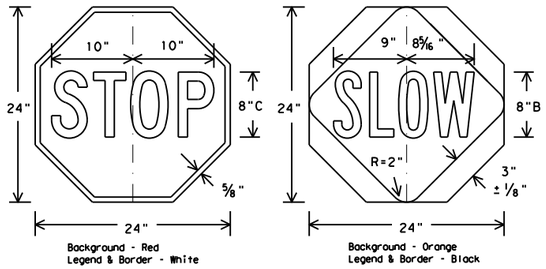

CONTRACTOR REQUIREMENTS FOR MAINTAINING PERMANENT SIGNS WITHIN THE PROJECT LIMITS

1. Permanent signs are used to give notice of traffic laws or regulations, call attention to conditions that are potentially hazardous to traffic operations, show route designations, destinations, directions, distances, services, points of interest, and other geographical, recreational, or cultural information. Drivers proceeding through a work zone need the same, if not better route guidance as normally installed on a roadway without construction.
2. When permanent regulatory or warning signs conflict with work zone conditions, remove or cover the permanent signs until the permanent sign message matches the roadway condition.
3. When existing permanent signs are moved and relocated due to construction purposes, they shall be visible to motorists at all times.
4. If existing signs are to be relocated on their original supports, they shall be installed on crashworthy bases as shown on the SMD Standard sheets. The signs shall meet the required mounting heights shown on the BC Sheets or the SMD Standards. This work should be paid for under the appropriate pay item for relocating existing signs.
5. If permanent signs are to be removed and relocated using temporary supports, the Contractor shall use crashworthy supports as shown on the BC sheets or the CWZTCD. The signs shall meet the required mounting heights shown on the BC Sheets or the SMD Standards during construction. This work should be paid for under the appropriate pay item for relocating existing signs.
6. Any sign or traffic control device that is struck or damaged by the Contractor or his/her construction equipment shall be replaced as soon as possible by the Contractor to ensure proper guidance for the motorists. This will be subsidiary to Item 502.

GENERAL NOTES FOR WORK ZONE SIGNS

1. Contractor shall install and maintain signs in a straight and plumb condition and/or as directed by the Engineer.
2. Wooden sign posts shall be painted white.
3. Barricades shall NOT be used as sign supports.
4. All signs shall be installed in accordance with the plans or as directed by the Engineer. Signs shall be used to regulate, warn, and guide the traveling public safely through the work zone.
5. The Contractor may furnish either the sign design shown in the plans or in the "Standard Highway Sign Designs for Texas" (SHSD). The Engineer/Inspector may require the Contractor to furnish other work zone signs that are shown in the TMUTCD but may have been omitted from the plans. Any variation in the plans shall be documented by written agreement between the Engineer and the Contractor's Responsible Person. All changes must be documented in writing before being implemented. This can include documenting the changes in the Inspector's TxDOT diary and having both the Inspector and Contractor initial and date the agreed upon changes.
6. The Contractor shall furnish sign supports listed in the "Compliant Work Zone Traffic Control Device List" (CWZTCD). The Contractor shall install the sign support in accordance with the manufacturer's recommendations. If there is a question regarding installation procedures, the Contractor shall furnish the Engineer a copy of the manufacturer's installation recommendations so the Engineer can verify the correct procedures are being followed.
7. The Contractor is responsible for installing signs on approved supports and replacing signs with damaged or cracked substrates and/or damaged or marred reflective sheeting as directed by the Engineer/Inspector.
8. Identification markings may be shown only on the back of the sign substrate. The maximum height of letters and/or company logos used for identification shall be 1 inch.
9. The Contractor shall replace damaged wood posts. New or damaged wood sign posts shall not be spliced.

DURATION OF WORK (as defined by the "Texas Manual on Uniform Traffic Control Devices" Part 6)

1. The types of sign supports, sign mounting height, the size of signs, and the type of sign substrates can vary based on the type of work being performed. The Engineer is responsible for selecting the appropriate size sign for the type of work being performed. The Contractor is responsible for ensuring the sign support, sign mounting height and substrate meets manufacturer's recommendations in regard to crashworthiness and duration of work requirements.
   a. Long-term stationary - work that occupies a location more than 3 days.
   b. Intermediate-term stationary - work that occupies a location more than one daylight period up to 3 days, or nighttime work lasting more than one hour.
   c. Short-term stationary - daytime work that occupies a location for more than 1 hour in a single daylight period.
   d. Short, duration - work that occupies a location up to 1 hour.
   e. Mobile - work that moves continuously or intermittently (stopping for up to approximately 15 minutes.)

SIGN MOUNTING HEIGHT

1. The bottom of Long-term/Intermediate-term signs shall be at least 7 feet, but not more than 9 feet, above the paved surface, except as shown for supplemental plaques mounted below other signs.
2. The bottom of Short-term/Short Duration signs shall be a minimum of 1 foot above the pavement surface but no more than 2 feet above the ground.
3. Long-term/Intermediate-term Signs may be used in lieu of Short-term/Short Duration signing.
4. Short-term/Short Duration signs shall be used only during daylight and shall be removed at the end of the workday or raised to appropriate Long-term/Intermediate sign height.
5. Regulatory signs shall be mounted at least 7 feet, but not more than 9 feet, above the paved surface regardless of work duration.

SIZE OF SIGNS

1. The Contractor shall furnish the sign sizes shown on BC (2) unless otherwise shown in the plans or as directed by the Engineer.

SIGN SUBSTRATES

1. The Contractor shall ensure the sign substrate is installed in accordance with the manufacturer's recommendations for the type of sign support that is being used. The CWZTCD lists each substrate that can be used on the different types and models of sign supports.
2. "Mesh" type materials are NOT an approved sign substrate, regardless of the tightness of the weave.
3. All wooden individual sign panels fabricated from 2 or more pieces shall have one or more plywood cleat, 1/2" thick by 6" wide, fastened to the back of the sign and extending fully across the sign. The cleat shall be attached to the back of the sign using wood screws that do not penetrate the face of the sign panel. The screws shall be placed on both sides of the splice and spaced at 6" centers. The Engineer may approve other methods of splicing the sign face.

REFLECTIVE SHEETING

1. All signs shall be retroreflective and constructed of sheeting meeting the color and retro-reflectivity requirements of DMS-8300 for rigid signs or DMS-8310 for roll-up signs. The web address for DMS specifications is shown on BC(1).
2. White sheeting, meeting the requirements of DMS-8300 Type A, shall be used for signs with a white background.
3. Orange sheeting, meeting the requirements of DMS-8300 Type B_{FL} or Type C_{FL}, shall be used for rigid signs with orange backgrounds.

SIGN LETTERS

1. All sign letters and numbers shall be clear, and open rounded type uppercase alphabet letters as approved by the Federal Highway Administration (FHWA) and as published in the "Standard Highway Sign Design for Texas" manual. Signs, letters and numbers shall be of first class workmanship in accordance with Department Standards and Specifications.

REMOVING OR COVERING

1. When sign messages may be confusing or do not apply, the signs shall be removed or completely covered.
2. Long-term stationary or intermediate stationary signs installed on square metal tubing may be turned away from traffic 90 degrees when the sign message is not applicable. This technique may not be used for signs installed in the median of divided highways or near any intersections where the sign may be seen from approaching traffic.
3. Signs installed on wooden skids shall not be turned at 90 degree angles to the roadway. These signs should be removed or completely covered when not required.
4. When signs are covered, the material used shall be opaque, such as heavy mil black plastic, or other materials which will cover the entire sign face and maintain their opaque properties under automobile headlights at night, without damaging the sign sheeting.
5. Burlap shall NOT be used to cover signs.
6. Duct tape or other adhesive material shall NOT be affixed to a sign face.
7. Signs and anchor stubs shall be removed and holes backfilled upon completion of work.

SIGN SUPPORT WEIGHTS

1. Where sign supports require the use of weights to keep from turning over, the use of sandbags with dry, cohesionless sand should be used.
2. The sandbags will be tied shut to keep the sand from spilling and to maintain a constant weight.
3. Rock, concrete, iron, steel or other solid objects shall not be permitted for use as sign support weights.
4. Sandbags should weigh a minimum of 35 lbs and a maximum of 50 lbs.
5. Sandbags shall be made of a durable material that tears upon vehicular impact. Rubber (such as tire inner tubes) shall NOT be used.
6. Rubber ballasts designed for channelizing devices should not be used for ballast on portable sign supports. Sign supports designed and manufactured with rubber bases may be used when shown on the CWZTCD list.
7. Sandbags shall only be placed along or laid over the base supports of the traffic control device and shall not be suspended above ground level or hung with rope, wire, chains or other fasteners. Sandbags shall be placed along the length of the skids to weigh down the sign support.
8. Sandbags shall NOT be placed under the skid and shall not be used to level sign supports placed on slopes.

FLAGS ON SIGNS

1. Flags may be used to draw attention to warning signs. When used the flag shall be 16 inches square or larger and shall be orange or fluorescent red-orange in color. Flags shall not be allowed to cover any portion of the sign face.

Texas Department of Transportation

Traffic Operations Division Standard

BARRICADE AND CONSTRUCTION TEMPORARY SIGN NOTES

BC(4)-14

FILE: bc-14.dgn	DN: TxDOT	CK: TxDOT	DW: TxDOT	CK: TxDOT
© TxDOT November 2002	CONT	SECT	JOB	HIGHWAY
REVISIONS	0055	15	072	US 84
9-07 8-14	DIST	COUNTY		SHEET NO.
7-13	WAC	MCLENNAN		39

DISCLAIMER:
The use of this standard is governed by the "Texas Engineering Practice Act". No warranty of any kind is made by TxDOT for any purpose whatsoever. TxDOT assumes no responsibility for the conversion of this standard to other formats or for incorrect results or damages resulting from its use.

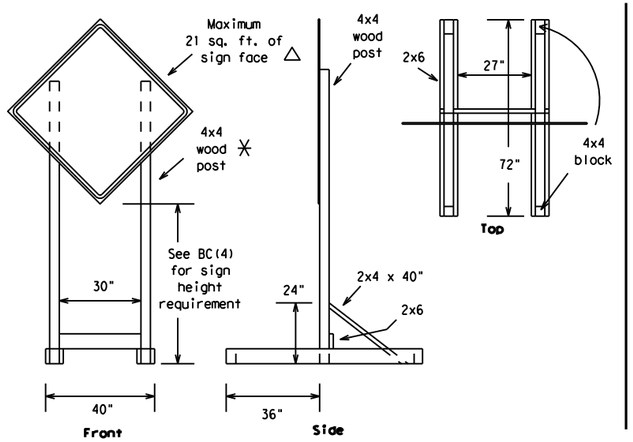

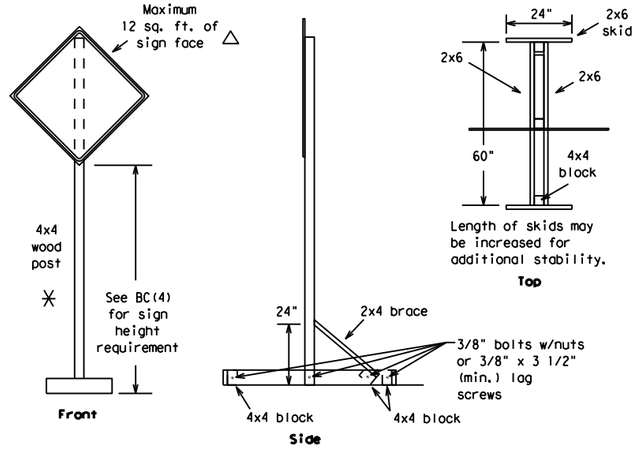

SKID MOUNTED WOOD SIGN SUPPORTS

LONG/INTERMEDIATE TERM STATIONARY - PORTABLE SKID MOUNTED SIGN SUPPORTS □

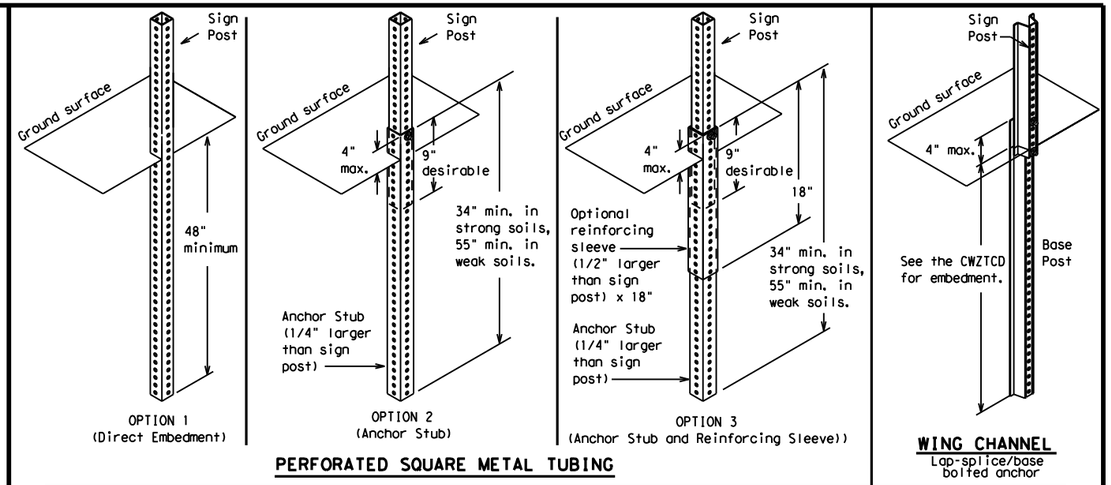

PERFORATED SQUARE METAL TUBING

GROUND MOUNTED SIGN SUPPORTS

Refer to the CWZTCD and the manufacturer's installation procedure for each type sign support.
The maximum sign square footage shall adhere to the manufacturer's recommendation.
Two post installations can be used for larger signs.

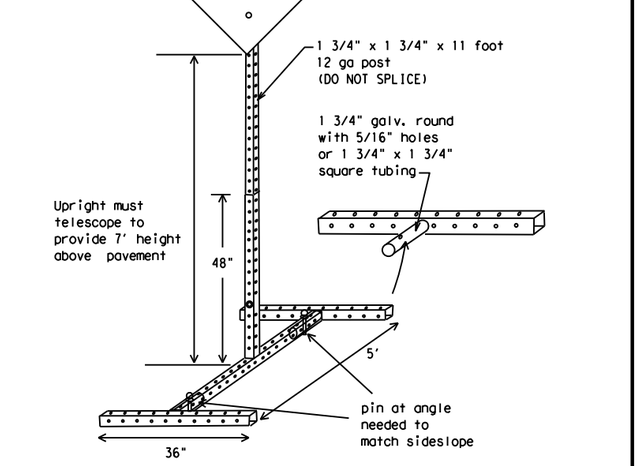

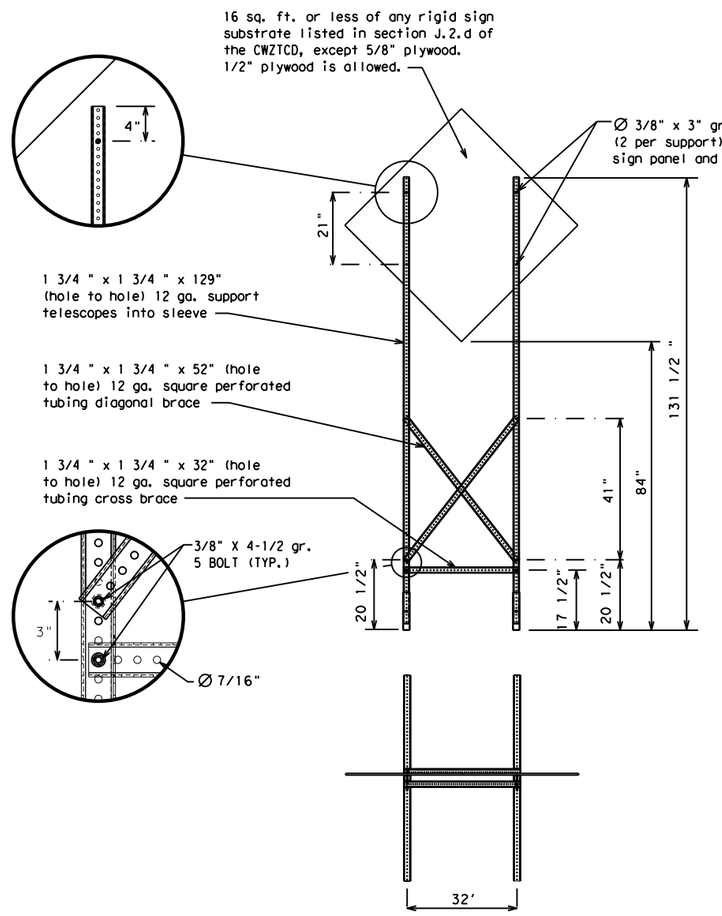

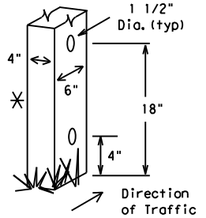

Nominal Post Size	Number of Posts	Maximum Sq. feet of Sign Face	Minimum Soil Embedment	Drilled Hole(s) Required
4 x 4	1	12	36"	NO
4 x 4	2	21	36"	NO
4 x 6	1	21	36"	YES
4 x 6	2	36	36"	YES

WOOD POST SYSTEM FOR GROUND MOUNTED SIGN SUPPORTS

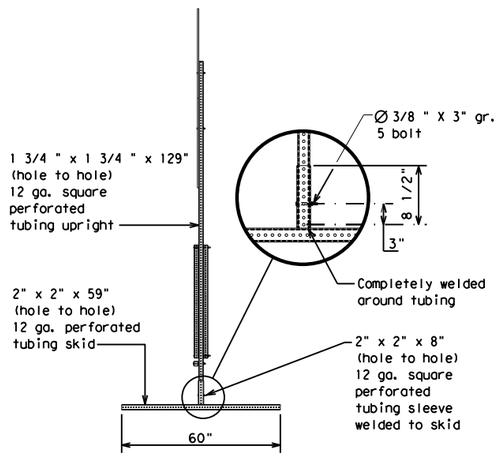

WEDGE ANCHORS

Both steel and plastic Wedge Anchor Systems as shown on the SMD Standard Sheets may be used as temporary sign supports for signs up to 10 square feet of sign face. They may be set in concrete or in sturdy soils if approved by the Engineer. (See web address for "Traffic Engineering Standard Sheets" on BC(1)).

OTHER DESIGNS

MORE DETAILS OF APPROVED LONG/INTERMEDIATE AND SHORT TERM SUPPORTS CAN BE FOUND ON THE CWZTCD LIST. SEE BC(1) FOR WEBSITE LOCATION.

GENERAL NOTES

1. Nails may be used in the assembly of wooden sign supports, but 3/8" bolts with nuts or 3/8" x 3 1/2" lag screws must be used on every joint for final connection.
2. No more than 2 sign posts shall be placed within a 7 ft. circle, except for specific materials noted on the CWZTCD List.
3. When project is completed, all sign supports and foundations shall be removed from the project site. This will be considered subsidiary to Item 502.

□ See BC(4) for definition of "Work Duration."

✳ Wood sign posts MUST be one piece. Splicing will NOT be allowed. Posts shall be painted white.

△ See the CWZTCD for the type of sign substrate that can be used for each approved sign support.

Texas Department of Transportation — Traffic Operations Division Standard

SKID MOUNTED PERFORATED SQUARE STEEL TUBING SIGN SUPPORTS

BARRICADE AND CONSTRUCTION TYPICAL SIGN SUPPORT

BC(5)-14

FILE: bc-14.dgn	DN: TxDOT	CK: TxDOT	DW: TxDOT	CK: TxDOT
© TxDOT November 2002	CONT	SECT	JOB	HIGHWAY
REVISIONS	0055	15	072	US 84
9-07 8-14	DIST	COUNTY		SHEET NO.
7-13	WAC	MCLENNAN		40

DATE:
FILE:

DISCLAIMER:
The use of this standard is governed by the "Texas Engineering Practice Act". No warranty of any kind is made by TxDOT for any purpose whatsoever. TxDOT assumes no responsibility for the conversion of this standard to other formats or for incorrect results or damages resulting from its use.

DATE:
FILE:

WHEN NOT IN USE, REMOVE THE PCMS FROM THE RIGHT-OF-WAY OR PLACE THE PCMS BEHIND BARRIER OR GUARDRAIL WITH SIGN PANEL TURNED PARALLEL TO TRAFFIC

PORTABLE CHANGEABLE MESSAGE SIGNS

1. The Engineer/Inspector shall approve all messages used on portable changeable message signs (PCMS).
2. Messages on PCMS should contain no more than 8 words (about four to eight characters per word), not including simple words such as "TO," "FOR," "AT," etc.
3. Messages should consist of a single phase, or two phases that alternate. Three-phase messages are not allowed. Each phase of the message should convey a single thought, and must be understood by itself.
4. Use the word "EXIT" to refer to an exit ramp on a freeway; i.e., "EXIT CLOSED." Do not use the term "RAMP."
5. Always use the route or interstate designation (IH, US, SH, FM) along with the number when referring to a roadway.
6. When in use the bottom of a stationary PCMS message panel should be a minimum 7 feet above the roadway, where possible.
7. The message term "WEEKEND" should be used only if the work is to start on Saturday morning and end by Sunday evening at midnight. Actual days and hours of work should be displayed on the PCMS if work is to begin on Friday evening and/or continue into Monday morning.
8. The Engineer/Inspector may select one of two options which are available for displaying a two-phase message on a PCMS. Each phase may be displayed for either four seconds each or for three seconds each.
9. Do not "flash" messages or words included in a message. The message should be steady burn or continuous while displayed.
10. Do not present redundant information on a two-phase message; i.e., keeping two lines of the message the same and changing the third line.
11. Do not use the word "Danger" in message.
12. Do not display the message "LANES SHIFT LEFT" or "LANES SHIFT RIGHT" on a PCMS. Drivers do not understand the message.
13. Do not display messages that scroll horizontally or vertically across the face of the sign.
14. The following table lists abbreviated words and two-word phrases that are acceptable for use on a PCMS. Both words in a phrase must be displayed together. Words or phrases not on this list should not be abbreviated, unless shown in the TMUTCD.
15. PCMS character height should be at least 18 inches for trailer mounted units. They should be visible from at least 1/2 (.5) mile and the text should be legible from at least 600 feet at night and 800 feet in daylight. Truck mounted units must have a character height of 10 inches and must be legible from at least 400 feet.
16. Each line of text should be centered on the message board rather than left or right justified.
17. If disabled, the PCMS should default to an illegible display that will not alarm motorists and will only be used to alert workers that the PCMS has malfunctioned. A pattern such as a series of horizontal solid bars is appropriate.

WORD OR PHRASE	ABBREVIATION
Access Road	ACCS RD
Alternate	ALT
Avenue	AVE
Best Route	BEST RTE
Boulevard	BLVD
Bridge	BRDG
Cannot	CANT
Center	CTR
Construction Ahead	CONST AHD
CROSSING	XING
Detour Route	DETOUR RTE
Do Not	DONT
East	E
Eastbound	(route) E
Emergency	EMER
Emergency Vehicle	EMER VEH
Entrance, Enter	ENT
Express Lane	EXP LN
Expressway	EXPWY
XXXX Feet	XXXX FT
Fog Ahead	FOG AHD
Freeway	FRWY, FWY
Freeway Blocked	FWY BLKD
Friday	FRI
Hazardous Driving	HAZ DRIVING
Hazardous Material	HAZMAT
High-Occupancy	HOV
Vehicle Highway	HWY
Hour(s)	HR, HRS
Information	INFO
It Is	ITS
Junction	JCT
Left	LFT
Left Lane	LFT LN
Lane Closed	LN CLOSED
Lower Level	LWR LEVEL
Maintenance	MAINT

WORD OR PHRASE	ABBREVIATION
Major	MAJ
Miles	MI
Miles Per Hour	MPH
Minor	MNR
Monday	MON
Normal	NORM
North	N
Northbound	(route) N
Parking	PKING
Road	RD
Right Lane	RT LN
Saturday	SAT
Service Road	SERV RD
Shoulder	SHLDR
Slippery	SLIP
South	S
Southbound	(route) S
Speed	SPD
Street	ST
Sunday	SUN
Telephone	PHONE
Temporary	TEMP
Thursday	THURS
To Downtown	TO DWNTN
Traffic	TRAF
Travelers	TRVLRS
Tuesday	TUES
Time Minutes	TIME MIN
Upper Level	UPR LEVEL
Vehicles (s)	VEH, VEHS
Warning	WARN
Wednesday	WED
Weight Limit	WT LIMIT
West	W
Westbound	(route) W
Wet Pavement	WET PVMT
Will Not	WONT

Roadway designation * IH-number, US-number, SH-number, FM-number

RECOMMENDED PHASES AND FORMATS FOR PCMS MESSAGES DURING ROADWORK ACTIVITIES

(The Engineer may approve other messages not specifically covered here.)

Phase 1: Condition Lists

Road/Lane/Ramp Closure List

- FREEWAY CLOSED X MILE
- FRONTAGE ROAD CLOSED
- ROAD CLOSED AT SH XXX
- SHOULDER CLOSED XXX FT
- ROAD CLSD AT FM XXXX
- RIGHT LN CLOSED XXX FT
- RIGHT X LANES CLOSED
- RIGHT X LANES OPEN
- CENTER LANE CLOSED
- DAYTIME LANE CLOSURES
- NIGHT LANE CLOSURES
- I-XX SOUTH EXIT CLOSED
- VARIOUS LANES CLOSED
- EXIT XXX CLOSED X MILE
- EXIT CLOSED
- RIGHT LN TO BE CLOSED
- MALL DRIVEWAY CLOSED
- X LANES CLOSED TUE - FRI
- XXXXXXXX BLVD CLOSED

Other Condition List

- ROADWORK XXX FT
- ROAD REPAIRS XXXX FT
- FLAGGER XXXX FT
- LANE NARROWS XXXX FT
- RIGHT LN NARROWS XXXX FT
- TWO-WAY TRAFFIC XX MILE
- MERGING TRAFFIC XXXX FT
- CONST TRAFFIC XXX FT
- LOOSE GRAVEL XXXX FT
- UNEVEN LANES XXXX FT
- DETOUR X MILE
- ROUGH ROAD XXXX FT
- ROADWORK PAST SH XXXX
- ROADWORK NEXT FRI-SUN
- BUMP XXXX FT
- US XXX EXIT X MILES
- TRAFFIC SIGNAL XXXX FT
- LANES SHIFT *

* LANES SHIFT in Phase 1 must be used with STAY IN LANE in Phase 2.

Phase 2: Possible Component Lists

Action to Take/Effect on Travel List

- MERGE RIGHT
- FORM X LINES RIGHT
- DETOUR NEXT X EXITS
- USE XXXXX RD EXIT
- USE EXIT XXX
- USE EXIT I-XX NORTH
- STAY ON US XXX SOUTH
- USE I-XX E TO I-XX N
- TRUCKS USE US XXX N
- WATCH FOR TRUCKS
- WATCH FOR TRUCKS
- EXPECT DELAYS
- EXPECT DELAYS
- PREPARE TO STOP
- REDUCE SPEED XXX FT
- END SHOULDER USE
- USE OTHER ROUTES
- WATCH FOR WORKERS
- STAY IN LANE *

Location List

- AT FM XXXX
- BEFORE RAILROAD CROSSING
- NEXT X MILES
- PAST US XXX EXIT
- XXXXXXX TO XXXXXXX
- US XXX TO FM XXXX

Warning List

- SPEED LIMIT XX MPH
- MAXIMUM SPEED XX MPH
- MINIMUM SPEED XX MPH
- ADVISORY SPEED XX MPH
- RIGHT LANE EXIT
- USE CAUTION
- DRIVE SAFELY
- DRIVE WITH CARE

** Advance Notice List

- TUE-FRI XX AM- X PM
- APR XX-XX X PM-X AM
- BEGINS MONDAY
- BEGINS MAY XX
- MAY X-X XX PM - XX AM
- NEXT FRI-SUN
- XX AM TO XX PM
- NEXT TUE AUG XX
- TONIGHT XX PM- XX AM

* STAY IN LANE in Phase 2 must be used with LANES SHIFT in Phase 1.

** See Application Guidelines Note 6.

APPLICATION GUIDELINES

1. Only 1 or 2 phases are to be used on a PCMS.
2. The 1st phase (or both) should be selected from the "Road/Lane/Ramp Closure List" and the "Other Condition List".
3. A 2nd phase can be selected from the "Action to Take/Effect on Travel, Location, General Warning, or Advance Notice Phase Lists".
4. A Location Phase is necessary only if a distance or location is not included in the first phase selected.
5. If two PCMS are used in sequence, they must be separated by a minimum of 1000 ft. Each PCMS shall be limited to two phases, and should be understandable by themselves.
6. For advance notice, when the current date is within seven days of the actual work date, calendar days should be replaced with days of the week. Advance notification should typically be for no more than one week prior to the work.

WORDING ALTERNATIVES

1. The words RIGHT, LEFT and ALL can be interchanged as appropriate.
2. Roadway designations IH, US, SH, FM and LP can be interchanged as appropriate.
3. EAST, WEST, NORTH and SOUTH (or abbreviations E, W, N and S) can be interchanged as appropriate.
4. Highway names and numbers replaced as appropriate.
5. ROAD, HIGHWAY and FREEWAY can be interchanged as needed.
6. AHEAD may be used instead of distances if necessary.
7. FT and MI, MILE and MILES interchanged as appropriate.
8. AT, BEFORE and PAST interchanged as needed.
9. Distances or AHEAD can be eliminated from the message if a location phase is used.

PCMS SIGNS WITHIN THE R.O.W. SHALL BE BEHIND GUARDRAIL OR CONCRETE BARRIER OR SHALL HAVE A MINIMUM OF FOUR (4) PLASTIC DRUMS PLACED PERPENDICULAR TO TRAFFIC ON THE UPSTREAM SIDE OF THE PCMS, WHEN EXPOSED TO ONE DIRECTION OF TRAFFIC. WHEN EXPOSED TO TWO WAY TRAFFIC, THE FOUR DRUMS SHOULD BE PLACED WITH ONE DRUM AT EACH OF THE FOUR CORNERS OF THE UNIT.

FULL MATRIX PCMS SIGNS

1. When Full Matrix PCMS signs are used, the character height and legibility/visibility requirements shall be maintained as listed in Note 15 under "PORTABLE CHANGEABLE MESSAGE SIGNS" above.
2. When symbol signs, such as the "Flagger Symbol"(CW20-7) are represented graphically on the Full Matrix PCMS sign and, with the approval of the Engineer, it shall maintain the legibility/visibility requirement listed above.
3. When symbol signs are represented graphically on the Full Matrix PCMS, they shall only supplement the use of the static sign represented, and shall not substitute for, or replace that sign.
4. A full matrix PCMS may be used to simulate a flashing arrow board provided it meets the visibility, flash rate and dimming requirements on BC(7), for the same size arrow.

Texas Department of Transportation

Traffic Operations Division Standard

BARRICADE AND CONSTRUCTION PORTABLE CHANGEABLE MESSAGE SIGN (PCMS)

BC(6)-14

FILE: bc-14.dgn	DN: TxDOT	CK: TxDOT	DW: TxDOT	CK: TxDOT
©TxDOT November 2002	CONT	SECT	JOB	HIGHWAY
REVISIONS	0055	15	072	US 84
9-07 8-14	DIST	COUNTY		SHEET NO.
7-13	WAC	MCLENNAN		41

DISCLAIMER:
The use of this standard is governed by the "Texas Engineering Practice Act". No warranty of any kind is made by TxDOT for any purpose whatsoever. TxDOT assumes no responsibility for the conversion of this standard to other formats or for incorrect results or damages resulting from its use.

DATE:
FILE:

1. Barrier Reflectors shall be pre-qualified, and conform to the color and reflectivity requirements of DMS-8600. A list of prequalified Barrier Reflectors can be found at the Material Producer List web address shown on BC(1).
2. Color of Barrier Reflectors shall be as specified in the TMUTCD. The cost of the reflectors shall be considered subsidiary to Item 512.

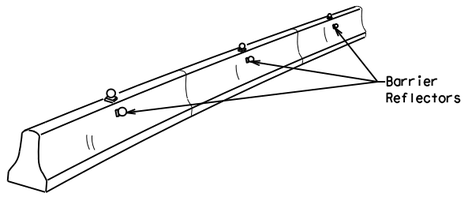

CONCRETE TRAFFIC BARRIER (CTB)

3. Where traffic is on one side of the CTB, two (2) Barrier Reflectors shall be mounted in approximately the midsection of each section of CTB. An alternate mounting location is uniformly spaced at one end of each CTB. This will allow for attachment of a barrier grapple without damaging the reflector. The Barrier Reflector mounted on the side of the CTB shall be located directly below the reflector mounted on top of the barrier, as shown in the detail above.
4. Where CTB separates two-way traffic, three barrier reflectors shall be mounted on each section of CTB. The reflector unit on top shall have two yellow reflective faces (Bi-Directional)while the reflectors on each side of the barrier shall have one yellow reflective face, as shown in the detail above.
5. When CTB separates traffic traveling in the same direction, no barrier reflectors will be required on top of the CTB.
6. Barrier Reflector units shall be yellow or white in color to match the edgeline being supplemented.
7. Maximum spacing of Barrier Reflectors is forty (40) feet.
8. Pavement markers or temporary flexible-reflective roadway marker tabs shall NOT be used as CTB delineation.
9. Attachment of Barrier Reflectors to CTB shall be per manufacturer's recommendations.
10. Missing or damaged Barrier Reflectors shall be replaced as directed by the Engineer.
11. Single slope barriers shall be delineated as shown on the above detail.

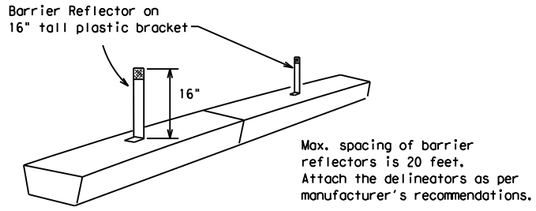

LOW PROFILE CONCRETE BARRIER (LPCB)

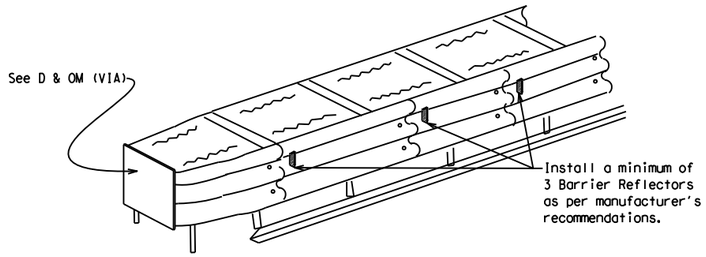

DELINEATION OF END TREATMENTS

END TREATMENTS FOR CTB'S USED IN WORK ZONES

End treatments used on CTB's in work zones shall meet crashworthy standards as defined in the National Cooperative Highway Research Report 350. Refer to the CWZTCD List for approved end treatments and manufacturers.

BARRIER REFLECTORS FOR CONCRETE TRAFFIC BARRIER AND ATTENUATORS

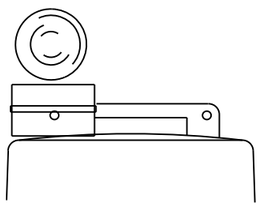

Type C Warning Light or approved substitute mounted on a drum adjacent to the travel way.

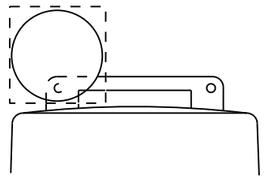

Warning reflector may be round or square. Must have a yellow reflective surface area of at least 30 square inches

WARNING LIGHTS

1. Warning lights shall meet the requirements of the TMUTCD.
2. Warning lights shall NOT be installed on barricades.
3. Type A-Low Intensity Flashing Warning Lights are commonly used with drums. They are intended to warn of or mark a potentially hazardous area. Their use shall be as indicated on this sheet and/or other sheets of the plans by the designation "FL". The Type A Warning Lights shall not be used with signs manufactured with Type B_{FL} or C_{FL} Sheeting meeting the requirements of Departmental Material Specification DMS-8300.
4. Type-C and Type D 360 degree Steady Burn Lights are intended to be used in a series for delineation to supplement other traffic control devices. Their use shall be as indicated on this sheet and/or other sheets of the plans by the designation "SB".
5. The Engineer/Inspector or the plans shall specify the location and type of warning lights to be installed on the traffic control devices.
6. When required by the Engineer, the Contractor shall furnish a copy of the warning lights certification. The warning light manufacturer will certify the warning lights meet the requirements of the latest ITE Purchase Specifications for Flashing and Steady-Burn Warning Lights.
7. When used to delineate curves, Type-C and Type D Steady Burn Lights should only be placed on the outside of the curve, not the inside.
8. The location of warning lights and warning reflectors on drums shall be as shown elsewhere in the plans.

WARNING LIGHTS MOUNTED ON PLASTIC DRUMS

1. Type A flashing warning lights are intended to warn drivers that they are approaching or are in a potentially hazardous area.
2. Type A random flashing warning lights are not intended for delineation and shall not be used in a series.
3. A series of sequential flashing warning lights placed on channelizing devices to form a merging taper may be used for delineation. If used, the successive flashing of the sequential warning lights should occur from the beginning of the taper to the end of the merging taper in order to identify the desired vehicle path. The rate of flashing for each light shall be 65 flashes per minute, plus or minus 10 flashes.
4. Type C and D steady-burn warning lights are intended to be used in a series to delineate the edge of the travel lane on detours, on lane changes, on lane closures, and on other similar conditions.
5. Type A, Type C and Type D warning lights shall be installed at locations as detailed on other sheets in the plans.
6. Warning lights shall not be installed on a drum that has a sign, chevron or vertical panel.
7. The maximum spacing for warning lights on drums should be identical to the channelizing device spacing.

WARNING REFLECTORS MOUNTED ON PLASTIC DRUMS AS A SUBSTITUTE FOR TYPE C (STEADY BURN) WARNING LIGHTS

1. A warning reflector or approved substitute may be mounted on a plastic drum as a substitute for a Type C, steady burn warning light at the discretion of the Contractor unless otherwise noted in the plans.
2. The warning reflector shall be yellow in color and shall be manufactured using a sign substrate approved for use with plastic drums listed on the CWZTCD.
3. The warning reflector shall have a minimum retroreflective surface area (one-side) of 30 square inches.
4. Round reflectors shall be fully reflectorized, including the area where attached to the drum.
5. Square substrates must have a minimum of 30 square inches of reflectorized sheeting. They do not have to be reflectorized where it attaches to the drum.
6. The side of the warning reflector facing approaching traffic shall have sheeting meeting the color and retroreflectivity requirements for DMS 8300-Type B or Type C.
7. When used near two-way traffic, both sides of the warning reflector shall be reflectorized.
8. The warning reflector should be mounted on the side of the handle nearest approaching traffic.
9. The maximum spacing for warning reflectors should be identical to the channelizing device spacing requirements.

Arrow Boards may be located behind channelizing devices in place for a shoulder taper or merging taper, otherwise they shall be delineated with four (4) channelizing devices placed perpendicular to traffic on the upstream side of traffic.

1. The Flashing Arrow Board should be used for all lane closures on multi-lane roadways, or slow moving maintenance or construction activities on the travel lanes.
2. Flashing Arrow Boards should not be used on two-lane, two-way roadways, detours, diversions or work on shoulders unless the "CAUTION" display (see detail below) is used.
3. The Engineer/Inspector shall choose all appropriate signs, barricades and/or other traffic control devices that should be used in conjunction with the Flashing Arrow Board.
4. The Flashing Arrow Board should be able to display the following symbols:

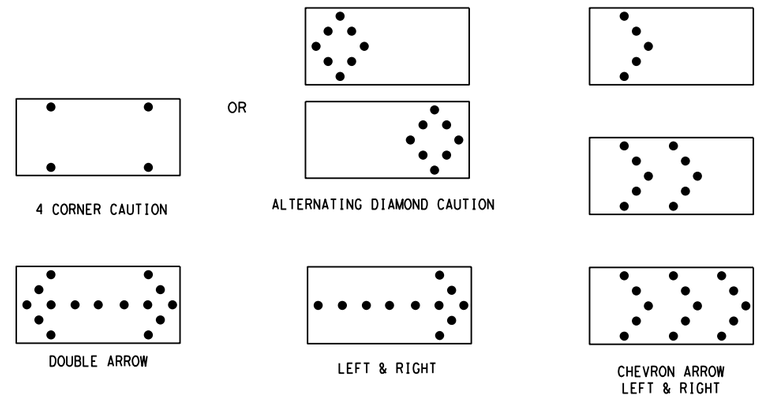

5. The "CAUTION" display consists of four corner lamps flashing simultaneously, or the Alternating Diamond Caution mode as shown.
6. The straight line caution display is NOT ALLOWED.
7. The Flashing Arrow Board shall be capable of minimum 50 percent dimming from rated lamp voltage. The flashing rate of the lamps shall not be less than 25 nor more than 40 flashes per minute.
8. Minimum lamp "on time" shall be approximately 50 percent for the flashing arrow and equal intervals of 25 percent for each sequential phase of the flashing chevron.
9. The sequential arrow display is NOT ALLOWED.
10. The flashing arrow display is the TxDOT standard; however, the sequential Chevron display may be used during daylight operations.
11. The Flashing Arrow Board shall be mounted on a vehicle, trailer or other suitable support.
12. A Flashing Arrow Board SHALL NOT BE USED to laterally shift traffic.
13. A full matrix PCMS may be used to simulate a Flashing Arrow Board provided it meets visibility, flash rate and dimming requirements on this sheet for the same size arrow.
14. Minimum mounting height of trailer mounted Arrow Boards should be 7 feet from roadway to bottom of panel.

REQUIREMENTS			
TYPE	MINIMUM SIZE	MINIMUM NUMBER OF PANEL LAMPS	MINIMUM VISIBILITY DISTANCE
B	30 x 60	13	3/4 mile
C	48 x 96	15	1 mile

ATTENTION
Flashing Arrow Boards shall be equipped with automatic dimming devices.

WHEN NOT IN USE, REMOVE THE ARROW BOARD FROM THE RIGHT-OF-WAY OR PLACE THE ARROW BOARD BEHIND CONCRETE TRAFFIC BARRIER OR GUARDRAIL.

FLASHING ARROW BOARDS

TRUCK-MOUNTED ATTENUATORS

1. Truck-mounted attenuators (TMA) used on TxDOT facilities must meet the requirements outlined in the National Cooperative Highway Research Report No. 350 (NCHRP 350) or the Manual for Assessing Safety Hardware (MASH).
2. Refer to the CWZTCD for the requirements of Level 2 or Level 3 TMAs.
3. Refer to the CWZTCD for a list of approved TMAs.
4. TMAs are required on freeways unless otherwise noted in the plans.
5. A TMA should be used anytime that it can be positioned 30 to 100 feet in advance of the area of crew exposure without adversely affecting the work performance.
6. The only reason a TMA should not be required is when a work area is spread down the roadway and the work crew is an extended distance from the TMA.

Texas Department of Transportation

Traffic Operations Division Standard

BARRICADE AND CONSTRUCTION ARROW PANEL, REFLECTORS, WARNING LIGHTS & ATTENUATOR

BC(7)-14

FILE: bc-14.dgn	DN: TxDOT	CK: TxDOT	DW: TxDOT	CK: TxDOT
© TxDOT November 2002	CONT	SECT	JOB	HIGHWAY
REVISIONS	0055	15	072	US 84
9-07 8-14	DIST	COUNTY		SHEET NO.
7-13	WAC	MCLENNAN		42

DISCLAIMER:
The use of this standard is governed by the "Texas Engineering Practice Act". No warranty of any kind is made by TxDOT for any purpose whatsoever. TxDOT assumes no responsibility for the conversion of this standard to other formats or for incorrect results or damages resulting from its use.

DATE:
FILE:

GENERAL NOTES

1. For long term stationary work zones on freeways, drums shall be used as the primary channelizing device.
2. For intermediate term stationary work zones on freeways, drums should be used as the primary channelizing device but may be replaced in tangent sections by vertical panels, or 42" two-piece cones. In tangent sections one-piece cones may be used with the approval of the Engineer but only if personnel are present on the project at all times to maintain the cones in proper position and location.
3. For short term stationary work zones on freeways, drums are the preferred channelizing device but may be replaced in tapers, transitions and tangent sections by vertical panels, two-piece cones or one-piece cones as approved by the Engineer.
4. Drums and all related items shall comply with the requirements of the current version of the "Texas Manual on Uniform Traffic Control Devices" (TMUTCD) and the "Compliant Work Zone Traffic Control Devices List" (CWZTCD).
5. Drums, bases, and related materials shall exhibit good workmanship and shall be free from objectionable marks or defects that would adversely affect their appearance or serviceability.
6. The Contractor shall have a maximum of 24 hours to replace any plastic drums identified for replacement by the Engineer/Inspector. The replacement device must be an approved device.

GENERAL DESIGN REQUIREMENTS

Pre-qualified plastic drums shall meet the following requirements:

1. Plastic drums shall be a two-piece design; the "body" of the drum shall be the top portion and the "base" shall be the bottom.
2. The body and base shall lock together in such a manner that the body separates from the base when impacted by a vehicle traveling at a speed of 20 MPH or greater but prevents accidental separation due to normal handling and/or air turbulence created by passing vehicles.
3. Plastic drums shall be constructed of lightweight flexible, and deformable materials. The Contractor shall NOT use metal drums or single piece plastic drums as channelization devices or sign supports.
4. Drums shall present a profile that is a minimum of 18 inches in width at the 36 inch height when viewed from any direction. The height of drum unit (body installed on base) shall be a minimum of 36 inches and a maximum of 42 inches.
5. The top of the drum shall have a built-in handle for easy pickup and shall be designed to drain water and not collect debris. The handle shall have a minimum of two widely spaced 9/16 inch diameter holes to allow attachment of a warning light, warning reflector unit or approved compliant sign.
6. The exterior of the drum body shall have a minimum of four alternating orange and white retroreflective circumferential stripes not less than 4 inches nor greater than 8 inches in width. Any non-reflectorized space between any two adjacent stripes shall not exceed 2 inches in width.
7. Bases shall have a maximum width of 36 inches, a maximum height of 4 inches, and a minimum of two footholds of sufficient size to allow base to be held down while separating the drum body from the base.
8. Plastic drums shall be constructed of ultra-violet stabilized, orange, high-density polyethylene (HDPE) or other approved material.
9. Drum body shall have a maximum unballasted weight of 11 lbs.
10. Drum and base shall be marked with manufacturer's name and model number.

RETROREFLECTIVE SHEETING

1. The stripes used on drums shall be constructed of sheeting meeting the color and retroreflectivity requirements of Departmental Materials Specification DMS-8300, "Sign Face Materials." Type A reflective sheeting shall be supplied unless otherwise specified in the plans.
2. The sheeting shall be suitable for use on and shall adhere to the drum surface such that, upon vehicular impact, the sheeting shall remain adhered in-place and exhibit no delaminating, cracking, or loss of retroreflectivity other than that loss due to abrasion of the sheeting surface.

BALLAST

1. Unballasted bases shall be large enough to hold up to 50 lbs. of sand. This base, when filled with the ballast material, should weigh between 35 lbs (minimum) and 50 lbs (maximum). The ballast may be sand in one to three sandbags separate from the base, sand in a sand-filled plastic base, or other ballasting devices as approved by the Engineer. Stacking of sandbags will be allowed, however height of sandbags above pavement surface may not exceed 12 inches.
2. Bases with built-in ballast shall weigh between 40 lbs. and 50 lbs. Built-in ballast can be constructed of an integral crumb rubber base or a solid rubber base.
3. Recycled truck tire sidewalls may be used for ballast on drums approved for this type of ballast on the CWZTCD list.
4. The ballast shall not be heavy objects, water, or any material that would become hazardous to motorists, pedestrians, or workers when the drum is struck by a vehicle.
5. When used in regions susceptible to freezing, drums shall have drainage holes in the bottoms so that water will not collect and freeze becoming a hazard when struck by a vehicle.
6. Ballast shall not be placed on top of drums.
7. Adhesives may be used to secure base of drums to pavement.

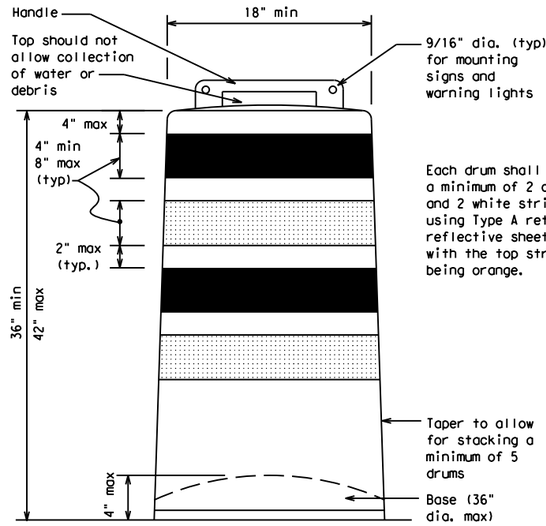

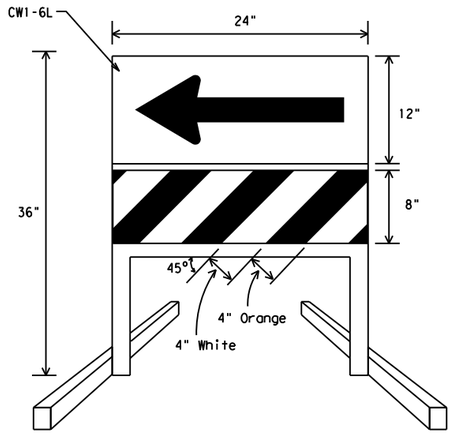

DIRECTION INDICATOR BARRICADE

1. The Direction Indicator Barricade may be used in tapers, transitions, and other areas where specific directional guidance to drivers is necessary.
2. If used, the Direction Indicator Barricade should be used in series to direct the driver through the transition and into the intended travel lane.
3. The Direction Indicator Barricade shall consist of One-Direction Large Arrow (CW1-6) sign in the size shown with a black arrow on a background of Type B_{FL} or Type C_{FL} Orange retroreflective sheeting above a rail with Type A retroreflective sheeting in alternating 4" white and orange stripes sloping downward at an angle of 45 degrees in the direction road users are to pass. Sheeting types shall be as per DMS 8300.
4. Double arrows on the Direction Indicator Barricade will not be allowed.
5. Approved manufacturers are shown on the CWZTCD List. Ballast shall be as approved by the manufacturers instructions.

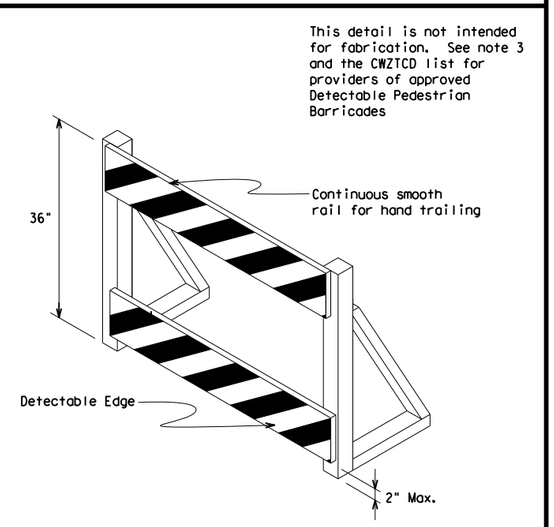

DETECTABLE PEDESTRIAN BARRICADES

1. When existing pedestrian facilities are disrupted, closed, or relocated in a TTC zone, the temporary facilities shall be detectable and include accessibility features consistent with the features present in the existing pedestrian facility.
2. Where pedestrians with visual disabilities normally use the closed sidewalk, a device that is detectable by a person with a visual disability traveling with the aid of a long cane shall be placed across the full width of the closed sidewalk.
3. Detectable pedestrian barricades similar to the one pictured above, longitudinal channelizing devices, some concrete barriers, and wood or chain link fencing with a continuous detectable edging can satisfactorily delineate a pedestrian path.
4. Tape, rope, or plastic chain strung between devices are not detectable, do not comply with the design standards in the "Americans with Disabilities Act Accessibility Guidelines for Buildings and Facilities (ADAAG)" and should not be used as a control for pedestrian movements.
5. Warning lights shall not be attached to detectable pedestrian barricades.
6. Detectable pedestrian barricades may use 8" nominal barricade rails as shown on BC(10) provided that the top rail provides a smooth continuous rail suitable for hand trailing with no splinters, burrs, or sharp edges.

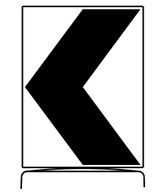

18" x 24" Sign
(Maximum Sign Dimension)
Chevron CW1-8, Opposing Traffic Lane Divider, Driveway sign D70a, Keep Right R4 series or other signs as approved by Engineer

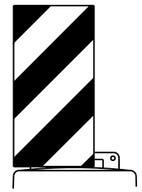

12" x 24"
Vertical Panel
mount with diagonals sloping down towards travel way

Plywood, Aluminum or Metal sign substrates shall NOT be used on plastic drums

SIGNS, CHEVRONS, AND VERTICAL PANELS MOUNTED ON PLASTIC DRUMS

1. Signs used on plastic drums shall be manufactured using substrates listed on the CWZTCD.
2. Chevrons and other work zone signs with an orange background shall be manufactured with Type B_{FL} or Type C_{FL} Orange sheeting meeting the color and retroreflectivity requirements of DMS-8300, "Sign Face Material," unless otherwise specified in the plans.
3. Vertical Panels shall be manufactured with orange and white sheeting meeting the requirements of DMS-8300 Type A Diagonal stripes on Vertical Panels shall slope down toward the intended traveled lane.
4. Other sign messages (text or symbolic) may be used as approved by the Engineer. Sign dimensions shall not exceed 18 inches in width or 24 inches in height, except for the R9 series signs discussed in note 8 below.
5. Signs shall be installed using a 1/2 inch bolt (nominal) and nut, two washers, and one locking washer for each connection.
6. Mounting bolts and nuts shall be fully engaged and adequately torqued. Bolts should not extend more than 1/2 inch beyond nuts.
7. Chevrons may be placed on drums on the outside of curves, on merging tapers or on shifting tapers. When used in these locations they may be placed on every drum or spaced not more than on every third drum. A minimum of three (3) should be used at each location called for in the plans.
8. R9-9, R9-10, R9-11 and R9-11a Sidewalk Closed signs which are 24 inches wide may be mounted on plastic drums, with approval of the Engineer.

Texas Department of Transportation

Traffic Operations Division Standard

BARRICADE AND CONSTRUCTION CHANNELIZING DEVICES

BC(8)-14

FILE: bc-14.dgn	DN: TxDOT	CK: TxDOT	DW: TxDOT	CK: TxDOT
©TxDOT November 2002	CONT	SECT	JOB	HIGHWAY
REVISIONS	0055	15	072	US 84
4-03 7-13	DIST	COUNTY		SHEET NO.
9-07 8-14	WAC	MCLENNAN		43

DISCLAIMER:
The use of this standard is governed by the "Texas Engineering Practice Act". No warranty of any kind is made by TxDOT for any purpose whatsoever. TxDOT assumes no responsibility for the conversion of this standard to other formats or for incorrect results or damages resulting from its use.

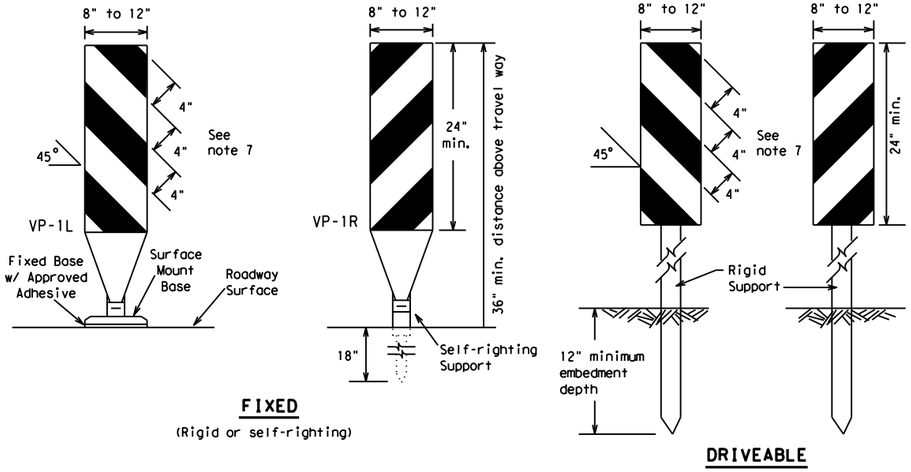

FIXED
(Rigid or self-righting)

DRIVEABLE

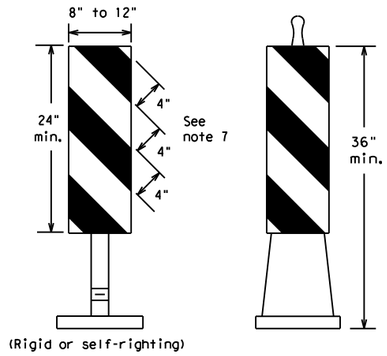

(Rigid or self-righting)

PORTABLE

1. Vertical Panels (VP's) are normally used to channelize traffic or divide opposing lanes of traffic.
2. VP's may be used in daytime or nighttime situations. They may be used at the edge of shoulder drop-offs and other areas such as lane transitions where positive daytime and nighttime delineation is required. The Engineer/Inspector shall refer to the Roadway Design Manual Appendix B "Treatment of Pavement Drop-offs in Work Zones" for additional guidelines on the use of VP's for drop-offs.
3. VP's should be mounted back to back if used at the edge of cuts adjacent to two-way two lane roadways. Stripes are to be reflective orange and reflective white and should always slope downward toward the travel lane.
4. VP's used on expressways and freeways or other high speed roadways, may have more than 270 square inches of retroreflective area facing traffic.
5. Self-righting supports are available with portable base. See "Compliant Work Zone Traffic Control Devices List" (CWZTCD).
6. Sheeting for the VP's shall be retroreflective Type A conforming to Departmental Material Specification DMS-8300, unless noted otherwise.
7. Where the height of reflective material on the vertical panel is 36 inches or greater, a panel stripe of 6 inches shall be used.

VERTICAL PANELS (VPs)

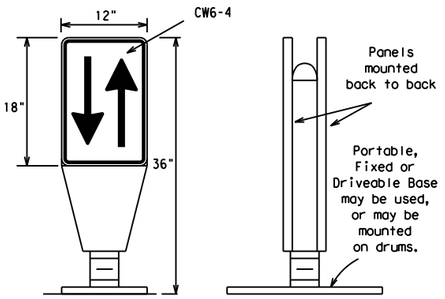

1. Opposing Traffic Lane Dividers (OTLD) are delineation devices designed to convert a normal one-way roadway section to two-way operation. OTLD's are used on temporary centerlines. The upward and downward arrows on the sign's face indicate the direction of traffic on either side of the divider. The base is secured to the pavement with an adhesive or rubber weight to minimize movement caused by a vehicle impact or wind gust.
2. The OTLD may be used in combination with 42" cones or VPs.
3. Spacing between the OTLD shall not exceed 500 feet. 42" cones or VPs placed between the OTLD's should not exceed 100 foot spacing.
4. The OTLD shall be orange with a black non-reflective legend. Sheeting for the OTLD shall be retroreflective Type B_{FL} or Type C_{FL} conforming to Departmental Material Specification DMS-8300, unless noted otherwise. The legend shall meet the requirements of DMS-8300.

OPPOSING TRAFFIC LANE DIVIDERS (OTLD)

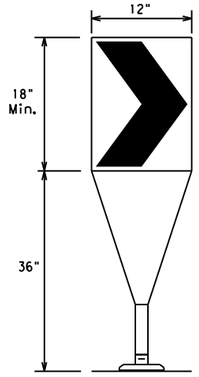

Fixed Base w/ Approved Adhesive (Driveable Base, or Flexible Support can be used)

1. The chevron shall be a vertical rectangle with a minimum size of 12 by 18 inches.
2. Chevrons are intended to give notice of a sharp change of alignment with the direction of travel and provide additional emphasis and guidance for vehicle operators with regard to changes in horizontal alignment of the roadway.
3. Chevrons, when used, shall be erected on the outside of a sharp curve or turn, or on the far side of an intersection. They shall be in line with and at right angles to approaching traffic. Spacing should be such that the motorist always has three in view, until the change in alignment eliminates its need.
4. To be effective, the chevron should be visible for at least 500 feet.
5. Chevrons shall be orange with a black nonreflective legend. Sheeting for the chevron shall be retroreflective Type B_{FL} or Type C_{FL} conforming to Departmental Material Specification DMS-8300, unless noted otherwise. The legend shall meet the requirements of DMS-8300.
6. For Long Term Stationary use on tapers or transitions on freeways and divided highways self-righting chevrons may be used to supplement plastic drums but not to replace plastic drums.

CHEVRONS

GENERAL NOTES

1. Work Zone channelizing devices illustrated on this sheet may be installed in close proximity to traffic and are suitable for use on high or low speed roadways. The Engineer/Inspector shall ensure that spacing and placement is uniform and in accordance with the "Texas Manual on Uniform Traffic Control Devices" (TMUTCD).
2. Channelizing devices shown on this sheet may have a driveable, fixed or portable base. The requirement for self-righting channelizing devices must be specified in the General Notes or other plan sheets.
3. Channelizing devices on self-righting supports should be used in work zone areas where channelizing devices are frequently impacted by errant vehicles or vehicle related wind gusts making alignment of the channelizing devices difficult to maintain. Locations of these devices shall be detailed elsewhere in the plans. These devices shall conform to the TMUTCD and the "Compliant Work Zone Traffic Control Devices List" (CWZTCD).
4. The Contractor shall maintain devices in a clean condition and replace damaged, nonreflective, faded, or broken devices and bases as required by the Engineer/Inspector. The Contractor shall be required to maintain proper device spacing and alignment.
5. Portable bases shall be fabricated from virgin and/or recycled rubber. The portable bases shall weigh a minimum of 30 lbs.
6. Pavement surfaces shall be prepared in a manner that ensures proper bonding between the adhesives, the fixed mount bases and the pavement surface. Adhesives shall be prepared and applied according to the manufacturer's recommendations.
7. The installation and removal of channelizing devices shall not cause detrimental effects to the final pavement surfaces, including pavement surface discoloration or surface integrity. Driveable bases shall not be permitted on final pavement surfaces. The Engineer/Inspector shall approve all application and removal procedures of fixed bases.

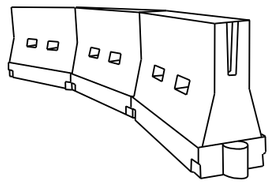

LONGITUDINAL CHANNELIZING DEVICES (LCD)

1. LCDs are crashworthy, lightweight, deformable devices that are highly visible, have good target value and can be connected together. They are not designed to contain or redirect a vehicle on impact.
2. LCDs may be used instead of a line of cones or drums.
3. LCDs shall be placed in accordance to application and installation requirements specific to the device, and used only when shown on the CWZTCD list.
4. LCDs should not be used to provide positive protection for obstacles, pedestrians or workers.
5. LCDs shall be supplemented with retroreflective delineation as required for temporary barriers on BC(7) when placed roughly parallel to the travel lanes.
6. LCDs used as barricades placed perpendicular to traffic should have at least one row of reflective sheeting meeting the requirements for barricade rails as shown on BC(10) placed near the top of the LCD along the full length of the device.

WATER BALLASTED SYSTEMS USED AS BARRIERS

1. Water ballasted systems used as barriers shall not be used solely to channelize road users, but also to protect the work space per the appropriate NCHRP 350 crashworthiness requirements based on roadway speed and barrier application.
2. Water ballasted systems used to channelize vehicular traffic shall be supplemented with retroreflective delineation or channelizing devices to improve daytime/nighttime visibility. They may also be supplemented with pavement markings.
3. Water ballasted systems used as barriers shall be placed in accordance to application and installation requirements specific to the device, and used only when shown on the CWZTCD list.
4. Water ballasted systems used as barriers should not be used for a merging taper except in low speed (less than 45 MPH) urban areas. When used on a taper in a low speed urban area, the taper shall be delineated and the taper length should be designed to optimize road user operations considering the available geometric conditions.
5. When water ballasted systems used as barriers have blunt ends exposed to traffic, they should be attenuated as per manufacturer recommendations or flared to a point outside the clear zone.

If used to channelize pedestrians, longitudinal channelizing devices or water ballasted systems must have a continuous detectable bottom for users of long canes and the top of the unit shall not be less than 32 inches in height.

HOLLOW OR WATER BALLASTED SYSTEMS USED AS LONGITUDINAL CHANNELIZING DEVICES OR BARRIERS

Posted Speed *	Formula	Minimum Desirable Taper Lengths ** 10' Offset	11' Offset	12' Offset	Suggested Maximum Spacing of Channelizing Devices On a Taper	On a Tangent
30	$L = \frac{WS^2}{60}$	150'	165'	180'	30'	60'
35		205'	225'	245'	35'	70'
40		265'	295'	320'	40'	80'
45	L = WS	450'	495'	540'	45'	90'
50		500'	550'	600'	50'	100'
55		550'	605'	660'	55'	110'
60		600'	660'	720'	60'	120'
65		650'	715'	780'	65'	130'
70		700'	770'	840'	70'	140'
75		750'	825'	900'	75'	150'
80		800'	880'	960'	80'	160'

** Taper lengths have been rounded off.
L=Length of Taper (FT.) W=Width of Offset (FT.)
S=Posted Speed (MPH)

SUGGESTED MAXIMUM SPACING OF CHANNELIZING DEVICES AND MINIMUM DESIRABLE TAPER LENGTHS

Texas Department of Transportation | Traffic Operations Division Standard

BARRICADE AND CONSTRUCTION CHANNELIZING DEVICES

BC(9)-14

FILE: bc-14.dgn	DN: TxDOT	CK: TxDOT	DW: TxDOT	CK: TxDOT
© TxDOT November 2002	CONT	SECT	JOB	HIGHWAY
REVISIONS	0055	15	072	US 84
9-07 8-14	DIST	COUNTY		SHEET NO.
7-13	WAC	MCLENNAN		44

DATE:
FILE:

DISCLAIMER:
The use of this standard is governed by the "Texas Engineering Practice Act". No warranty of any kind is made by TxDOT for any purpose whatsoever. TxDOT assumes no responsibility for the conversion of this standard to other formats or for incorrect results or damages resulting from its use.

TYPE 3 BARRICADES

1. Refer to the Compliant Work Zone Traffic Control Devices List (CWZTCD) for details of the Type 3 Barricades and a list of all materials used in the construction of Type 3 Barricades.
2. Type 3 Barricades shall be used at each end of construction projects closed to all traffic.
3. Barricades extending across a roadway should have stripes that slope downward in the direction toward which traffic must turn in detouring. When both right and left turns are provided, the chevron striping may slope downward in both directions from the center of the barricade. Where no turns are provided at a closed road striping should slope downward in both directions toward the center of roadway.
4. Striping of rails, for the right side of the roadway, should slope downward to the left. For the left side of the roadway, striping should slope downward to the right.
5. Identification markings may be shown only on the back of the barricade rails. The maximum height of letters and/or company logos used for identification shall be 1".
6. Barricades shall not be placed parallel to traffic unless an adequate clear zone is provided.
7. Warning lights shall NOT be installed on barricades.
8. Where barricades require the use of weights to keep from turning over, the use of sandbags with dry, cohesionless sand is recommended. The sandbags will be tied shut to keep the sand from spilling and to maintain a constant weight. Sand bags shall not be stacked in a manner that covers any portion of a barricade rails reflective sheeting. Rock, concrete, iron, steel or other solid objects will NOT be permitted. Sandbags should weigh a minimum of 35 lbs and a maximum of 50 lbs. Sandbags shall be made of a durable material that tears upon vehicular impact. Rubber (such as tire inner tubes) shall not be used for sandbags. Sandbags shall only be placed along or upon the base supports of the device and shall not be suspended above ground level or hung with rope, wire, chains or other fasteners.
9. Sheeting for barricades shall be retroreflective Type A conforming to Departmental Material Specification DMS-8300 unless otherwise noted.

Barricades shall NOT be used as a sign support.

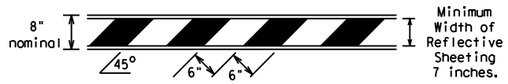

TYPICAL STRIPING DETAIL FOR BARRICADE RAIL

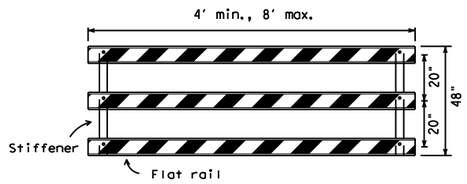

Stiffener may be inside or outside of support, but no more than 2 stiffeners shall be allowed on one barricade.

TYPICAL PANEL DETAIL FOR SKID OR POST TYPE BARRICADES

Each roadway of a divided highway shall be barricaded in the same manner.

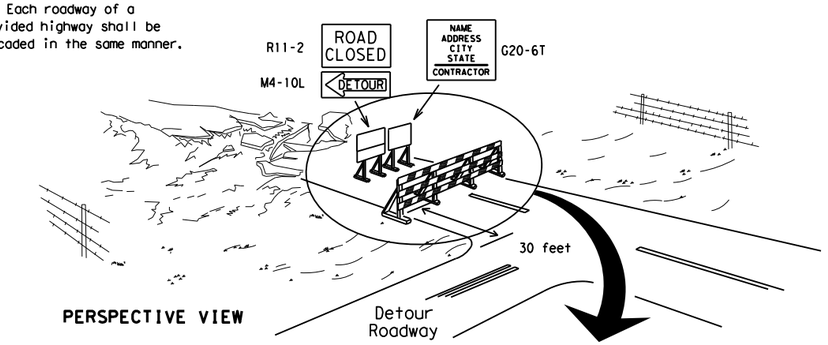

PERSPECTIVE VIEW

The three rails on Type 3 barricades shall be reflectorized orange and reflective white stripes on one side facing one-way traffic and both sides for two-way traffic.
Barricade striping should slant downward in the direction of detour.

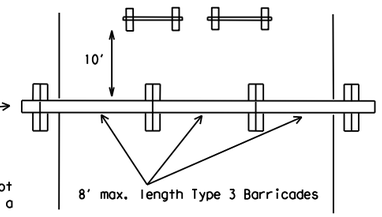

PLAN VIEW

1. Signs should be mounted on independent supports at a 7 foot mounting height in center of roadway. The signs should be a minimum of 10 feet behind Type 3 Barricades.
2. Advance signing shall be as specified elsewhere in the plans.

TYPE 3 BARRICADE (POST AND SKID) TYPICAL APPLICATION

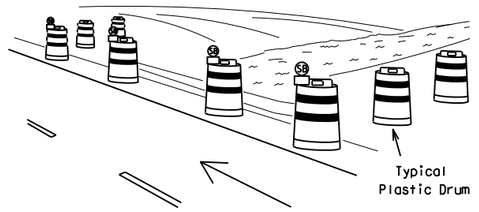

PERSPECTIVE VIEW

1. Where positive redirectional capability is provided, drums may be omitted.
2. Plastic construction fencing may be used with drums for safety as required in the plans.
3. Vertical Panels on flexible support may be substituted for drums when the shoulder width is less than 4 feet.
4. When the shoulder width is greater than 12 feet, steady-burn lights may be omitted if drums are used.
5. Drums must extend the length of the culvert widening.

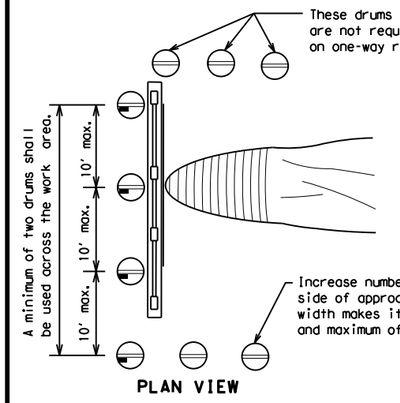

LEGEND	
	Plastic drum
	Plastic drum with steady burn light or yellow warning reflector
SB	Steady burn warning light or yellow warning reflector

PLAN VIEW

CULVERT WIDENING OR OTHER ISOLATED WORK WITHIN THE PROJECT LIMITS

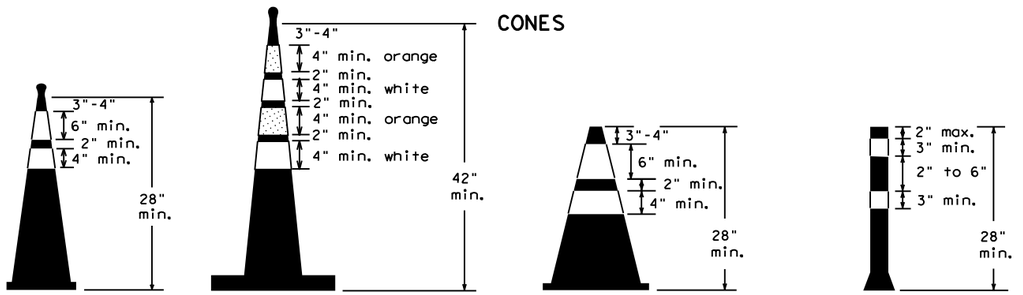

28" Cones shall have a minimum weight of 9 1/2 lbs.

42" 2-piece cones shall have a minimum weight of 30 lbs. including base.

1. Traffic cones and tubular markers shall be predominantly orange, and meet the height and weight requirements shown above.
2. One-piece cones have the body and base of the cone molded in one consolidated unit. Two-piece cones have a cone shaped body and a separate rubber base, or ballast, that is added to keep the device upright and in place.
3. Two-piece cones may have a handle or loop extending up to 8" above the minimum height shown, in order to aid in retrieving the device.
4. Cones or tubular markers used at night shall have white or white and orange reflective bands as shown above. The reflective bands shall have a smooth, sealed outer surface and meet the requirements of Departmental Material Specification DMS-8300 Type A.
5. 28" cones and tubular markers are generally suitable for short duration and short-term stationary work as defined on BC(4). These should not be used for intermediate-term or long-term stationary work unless personnel is on-site to maintain them in their proper upright position.
6. 42" two-piece cones, vertical panels or drums are suitable for all work zone durations.
7. Cones or tubular markers used on each project should be of the same size and shape.

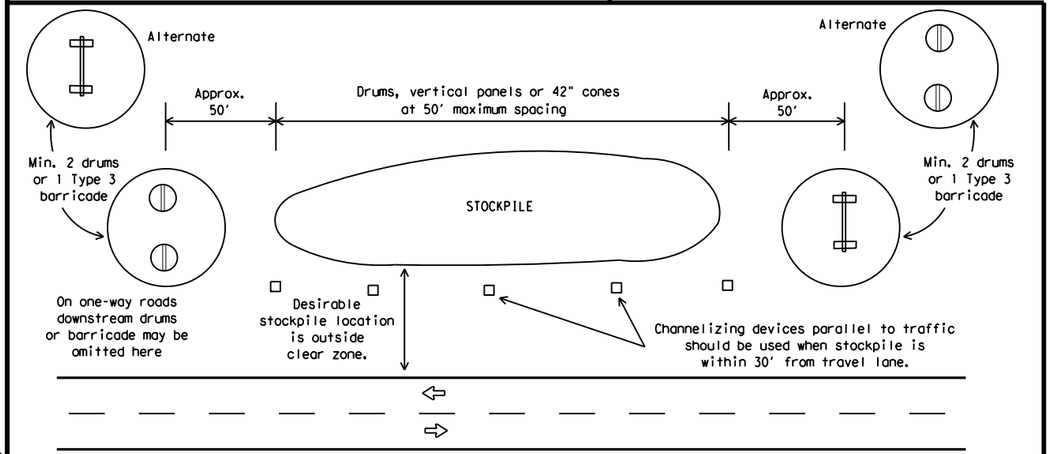

TRAFFIC CONTROL FOR MATERIAL STOCKPILES

THIS DEVICE SHALL NOT BE USED ON PROJECTS LET AFTER MARCH 2014.

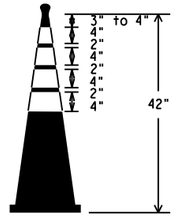

EDGELINE CHANNELIZER

1. This device is intended only for use in place of a vertical panel to channelize traffic by indicating the edge of the travel lane. It is not intended to be used in transitions or tapers.
2. This device shall not be used to separate lanes of traffic (opposing or otherwise) or warn of objects.
3. This device is based on a 42 inch, two-piece cone with an alternate striping pattern: four 4 inch retroreflective bands, with an approximate 2 inch gap between bands. The color of the band should correspond to the color of the edgeline (yellow for left edgeline, white for right edgeline) for which the device is substituted or for which it supplements. The reflectorized bands shall be retroreflective Type A conforming to Departmental Material Specification DMS-8300, unless otherwise noted.
4. The base must weigh a minimum of 30 lbs.

Texas Department of Transportation

Traffic Operations Division Standard

BARRICADE AND CONSTRUCTION CHANNELIZING DEVICES

BC(10)-14

FILE: bc-14.dgn	DN: TxDOT	CK: TxDOT	DW: TxDOT	CK: TxDOT
© TxDOT November 2002	CONT	SECT	JOB	HIGHWAY
REVISIONS	0055	15	072	US 84
9-07 8-14	DIST	COUNTY		SHEET NO.
7-13	WAC	MCLENNAN		45

DATE:
FILE:

DISCLAIMER:
The use of this standard is governed by the "Texas Engineering Practice Act". No warranty of any kind is made by TxDOT for any purpose whatsoever. TxDOT assumes no responsibility for the conversion of this standard to other formats or for incorrect results or damages resulting from its use.

DATE:
FILE:

WORK ZONE PAVEMENT MARKINGS

GENERAL

1. The Contractor shall be responsible for maintaining work zone and existing pavement markings, in accordance with the standard specifications and special provisions, on all roadways open to traffic within the CSJ limits unless otherwise stated in the plans.
2. Color, patterns and dimensions shall be in conformance with the "Texas Manual on Uniform Traffic Control Devices" (TMUTCD).
3. Additional supplemental pavement marking details may be found in the plans or specifications.
4. Pavement markings shall be installed in accordance with the TMUTCD and as shown on the plans.
5. When short term markings are required on the plans, short term markings shall conform with the TMUTCD, the plans and details as shown on the Standard Plan Sheet WZ(STPM).
6. When standard pavement markings are not in place and the roadway is opened to traffic, DO NOT PASS signs shall be erected to mark the beginning of the sections where passing is prohibited and PASS WITH CARE signs at the beginning of sections where passing is permitted.
7. All work zone pavement markings shall be installed in accordance with Item 662, "Work Zone Pavement Markings."

RAISED PAVEMENT MARKERS

1. Raised pavement markers are to be placed according to the patterns on BC(12).
2. All raised pavement markers used for work zone markings shall meet the requirements of Item 672, "RAISED PAVEMENT MARKERS" and Departmental Material Specification DMS-4200 or DMS-4300.

PREFABRICATED PAVEMENT MARKINGS

1. Removable prefabricated pavement markings shall meet the requirements of DMS-8241.
2. Non-removable prefabricated pavement markings (foil back) shall meet the requirements of DMS-8240.

MAINTAINING WORK ZONE PAVEMENT MARKINGS

1. The Contractor will be responsible for maintaining work zone pavement markings within the work limits.
2. Work zone pavement markings shall be inspected in accordance with the frequency and reporting requirements of work zone traffic control device inspections as required by Form 599.
3. The markings should provide a visible reference for a minimum distance of 300 feet during normal daylight hours and 160 feet when illuminated by automobile low-beam headlights at night, unless sight distance is restricted by roadway geometrics.
4. Markings failing to meet this criteria within the first 30 days after placement shall be replaced at the expense of the Contractor as per Specification Item 662.

REMOVAL OF PAVEMENT MARKINGS

1. Pavement markings that are no longer applicable, could create confusion or direct a motorist toward or into the closed portion of the roadway shall be removed or obliterated before the roadway is opened to traffic.
2. The above shall not apply to detours in place for less than three days, where flaggers and/or sufficient channelizing devices are used in lieu of markings to outline the detour route.
3. Pavement markings shall be removed to the fullest extent possible, so as not to leave a discernable marking. This shall be by any method approved by TxDOT Specification Item 677 for "Eliminating Existing Pavement Markings and Markers".
4. The removal of pavement markings may require resurfacing or seal coating portions of the roadway as described in Item 677.
5. Subject to the approval of the Engineer, any method that proves to be successful on a particular type pavement may be used.
6. Blast cleaning may be used but will not be required unless specifically shown in the plans.
7. Over-painting of the markings SHALL NOT BE permitted.
8. Removal of raised pavement markers shall be as directed by the Engineer.
9. Removal of existing pavement markings and markers will be paid for directly in accordance with Item 677, "ELIMINATING EXISTING PAVEMENT MARKINGS AND MARKERS," unless otherwise stated in the plans.
10. Black-out marking tape may be used to cover conflicting existing markings for periods less than two weeks when approved by the Engineer.

Temporary Flexible-Reflective Roadway Marker Tabs

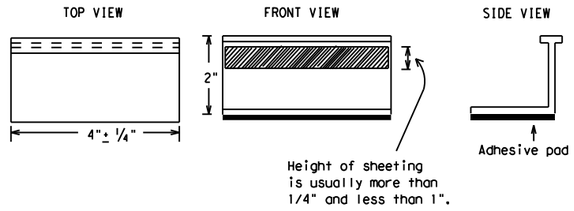

STAPLES OR NAILS SHALL NOT BE USED TO SECURE TEMPORARY FLEXIBLE-REFLECTIVE ROADWAY MARKER TABS TO THE PAVEMENT SURFACE

1. Temporary flexible-reflective roadway marker tabs used as guidemarks shall meet the requirements of DMS-8242.
2. Tabs detailed on this sheet are to be inspected and accepted by the Engineer or designated representative. Sampling and testing is not normally required, however at the option of the Engineer, either "A" or "B" below may be imposed to assure quality before placement on the roadway.
   A. Select five (5) or more tabs at random from each lot or shipment and submit to the Construction Division, Materials and Pavement Section to determine specification compliance.
   B. Select five (5) tabs and perform the following test. Affix five (5) tabs at 24 inch intervals on an asphaltic pavement in a straight line. Using a medium size passenger vehicle or pickup, run over the markers with the front and rear tires at a speed of 35 to 40 miles per hour, four (4) times in each direction. No more than one (1) out of the five (5) reflective surfaces shall be lost or displaced as a result of this test.
3. Small design variances may be noted between tab manufacturers.
4. See Standard Sheet WZ(STPM) for tab placement on new pavements. See Standard Sheet TCP(7-1) for tab placement on seal coat work.

RAISED PAVEMENT MARKERS USED AS GUIDEMARKS

1. Raised pavement markers used as guidemarks shall be from the approved product list, and meet the requirements of DMS-4200.
2. All temporary construction raised pavement markers provided on a project shall be of the same manufacturer.
3. Adhesive for guidemarks shall be bituminous material hot applied or butyl rubber pad for all surfaces, or thermoplastic for concrete surfaces.

Guidemarks shall be designated as:
YELLOW - (two amber reflective surfaces with yellow body).
WHITE - (one silver reflective surface with white body).

DEPARTMENTAL MATERIAL SPECIFICATIONS	
PAVEMENT MARKERS (REFLECTORIZED)	DMS-4200
TRAFFIC BUTTONS	DMS-4300
EPOXY AND ADHESIVES	DMS-6100
BITUMINOUS ADHESIVE FOR PAVEMENT MARKERS	DMS-6130
PERMANENT PREFABRICATED PAVEMENT MARKINGS	DMS-8240
TEMPORARY REMOVABLE, PREFABRICATED PAVEMENT MARKINGS	DMS-8241
TEMPORARY FLEXIBLE, REFLECTIVE ROADWAY MARKER TABS	DMS-8242

A list of prequalified reflective raised pavement markers, non-reflective traffic buttons, roadway marker tabs and other pavement markings can be found at the Material Producer List web address shown on BC(1).

Texas Department of Transportation

Traffic Operations Division Standard

BARRICADE AND CONSTRUCTION PAVEMENT MARKINGS

BC(11)-14

FILE: bc-14.dgn	DN: TxDOT	CK: TxDOT	DW: TxDOT	CK: TxDOT
©TxDOT February 1998	CONT	SECT	JOB	HIGHWAY
REVISIONS	0055	15	072	US 84
2-98 9-07	DIST	COUNTY		SHEET NO.
1-02 7-13	WAC	MCLENNAN		46
11-02 8-14				

105

DISCLAIMER:
The use of this standard is governed by the "Texas Engineering Practice Act". No warranty of any kind is made by TxDOT for any purpose whatsoever. TxDOT assumes no responsibility for the conversion of this standard to other formats or for incorrect results or damages resulting from its use.

DATE:
FILE:

PAVEMENT MARKING PATTERNS

REFLECTORIZED PAVEMENT MARKINGS - PATTERN A

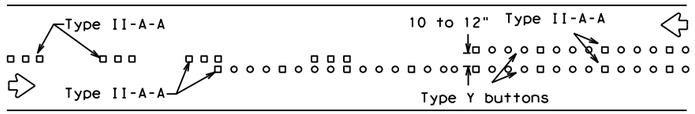

RAISED PAVEMENT MARKERS - PATTERN A

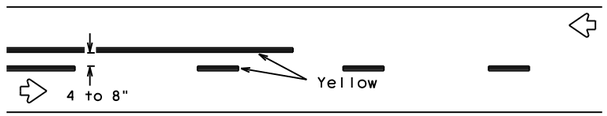

REFLECTORIZED PAVEMENT MARKINGS - PATTERN B

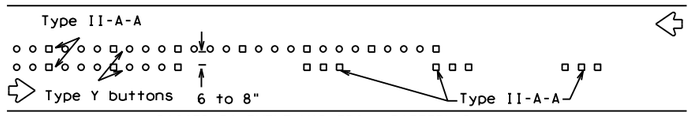

RAISED PAVEMENT MARKERS - PATTERN B

Pattern A is the TXDOT Standard, however Pattern B may be used if approved by the Engineer.
Prefabricated markings may be substituted for reflectorized pavement markings.

CENTER LINE & NO-PASSING ZONE BARRIER LINES FOR TWO-LANE, TWO-WAY HIGHWAYS

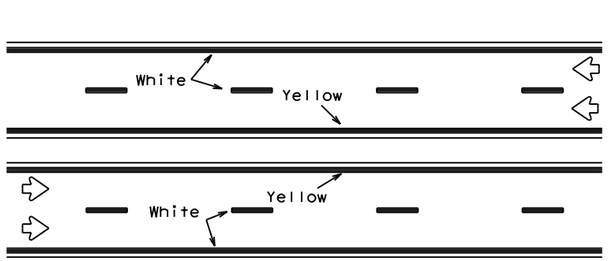

REFLECTORIZED PAVEMENT MARKINGS

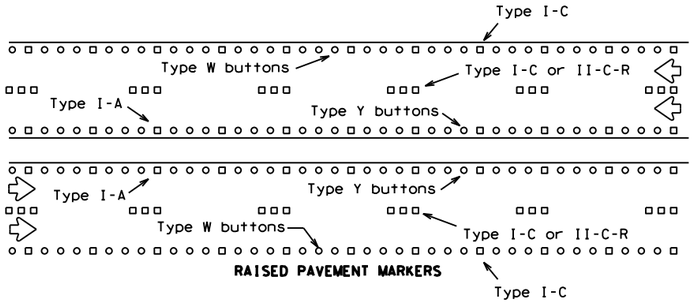

RAISED PAVEMENT MARKERS

Prefabricated markings may be substituted for reflectorized pavement markings.

EDGE & LANE LINES FOR DIVIDED HIGHWAY

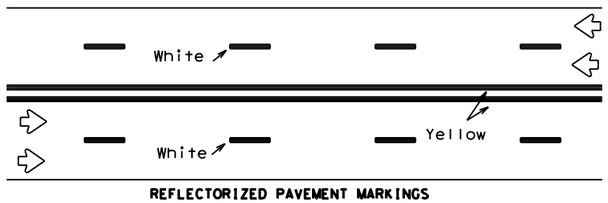

REFLECTORIZED PAVEMENT MARKINGS

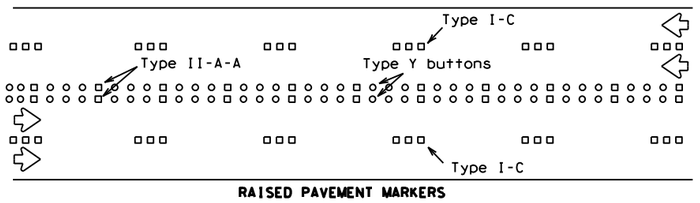

RAISED PAVEMENT MARKERS

Prefabricated markings may be substituted for reflectorized pavement markings.

LANE & CENTER LINES FOR MULTILANE UNDIVIDED HIGHWAYS

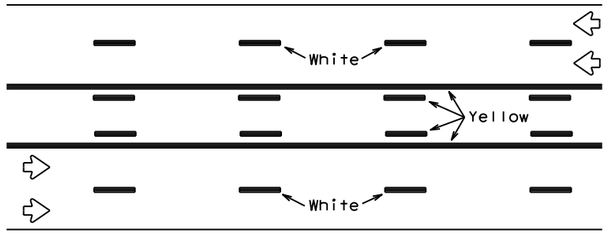

REFLECTORIZED PAVEMENT MARKINGS

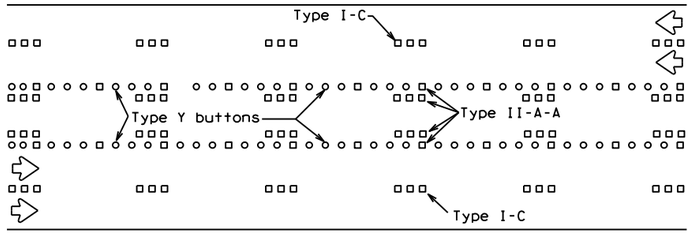

RAISED PAVEMENT MARKERS

Prefabricated markings may be substituted for reflectorized pavement markings.

TWO-WAY LEFT TURN LANE

STANDARD WORK ZONE PAVEMENT MARKINGS DETAILS

SOLID LINES

DOUBLE NO-PASSING LINE

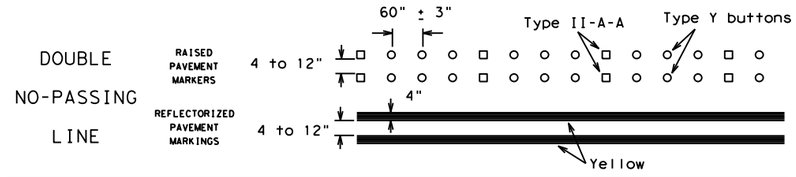

EDGE LINE OR SINGLE NO-PASSING LINE

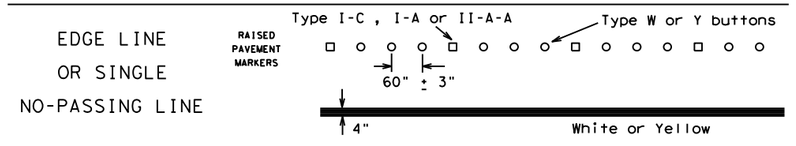

WIDE LINE

(FOR LEFT TURN CHANNELIZING LINE OR CHANNELIZING LINE USED TO DISCOURAGE LANE CHANGING.)

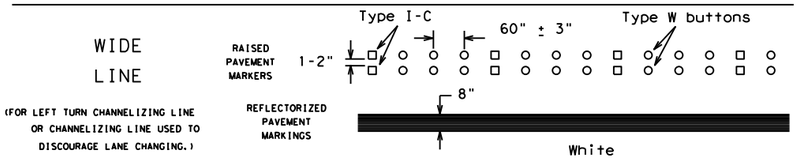

BROKEN LINES

CENTER LINE OR LANE LINE

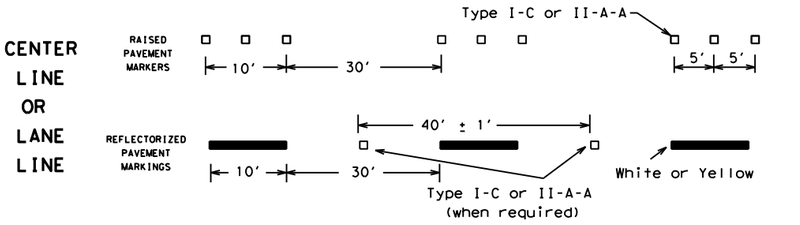

AUXILIARY OR LANEDROP LINE

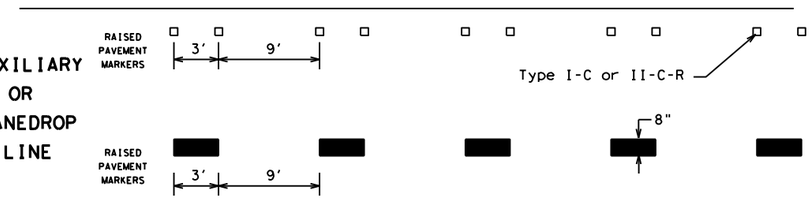

REMOVABLE MARKINGS WITH RAISED PAVEMENT MARKERS

If raised pavement markers are used to supplement REMOVABLE markings, the markers shall be applied to the top of the tape at the approximate mid length of tape used for broken lines or at 20 foot spacing for solid lines. This allows an easier removal of raised pavement markers and tape.

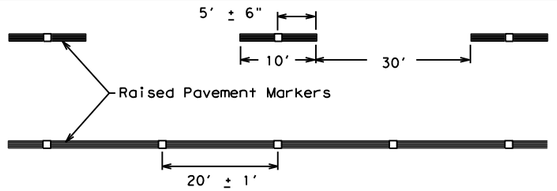

Centerline only - not to be used on edge lines

Raised pavement markers used as standard pavement markings shall be from the approved products list and meet the requirements of Item 672 "RAISED PAVEMENT MARKERS."

Texas Department of Transportation

Traffic Operations Division Standard

BARRICADE AND CONSTRUCTION PAVEMENT MARKING PATTERNS

BC(12)-14

FILE: bc-14.dgn	DN: TxDOT	CK: TxDOT	DW: TxDOT	CK: TxDOT
© TxDOT February 1998	CONT	SECT	JOB	HIGHWAY
REVISIONS	0055	15	072	US 84
1-97 9-07	DIST	COUNTY		SHEET NO.
2-98 7-13	WAC	MCLENNAN		47
11-02 8-14				

DISCLAIMER:
The use of this standard is governed by the "Texas Engineering Practice Act". No warranty of any kind is made by TxDOT for any purpose whatsoever. TxDOT assumes no responsibility for the conversion of this standard to other formats or for incorrect results or damages resulting from its use.

DATE:
FILE:

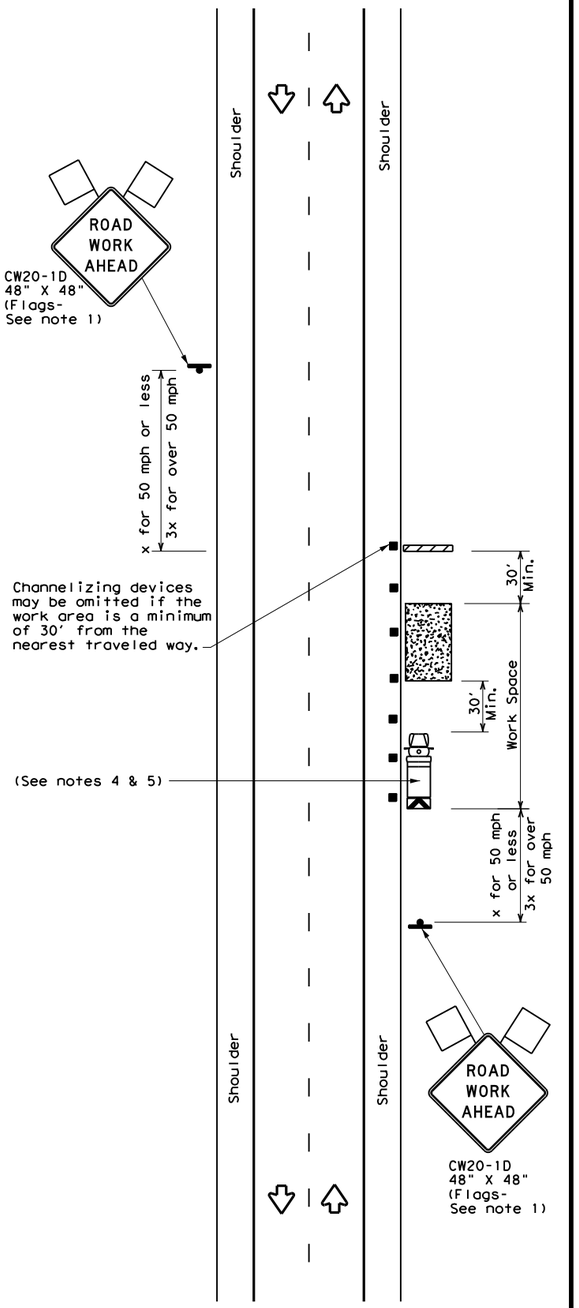

TCP (2-1a)

WORK SPACE NEAR SHOULDER
Conventional Roads

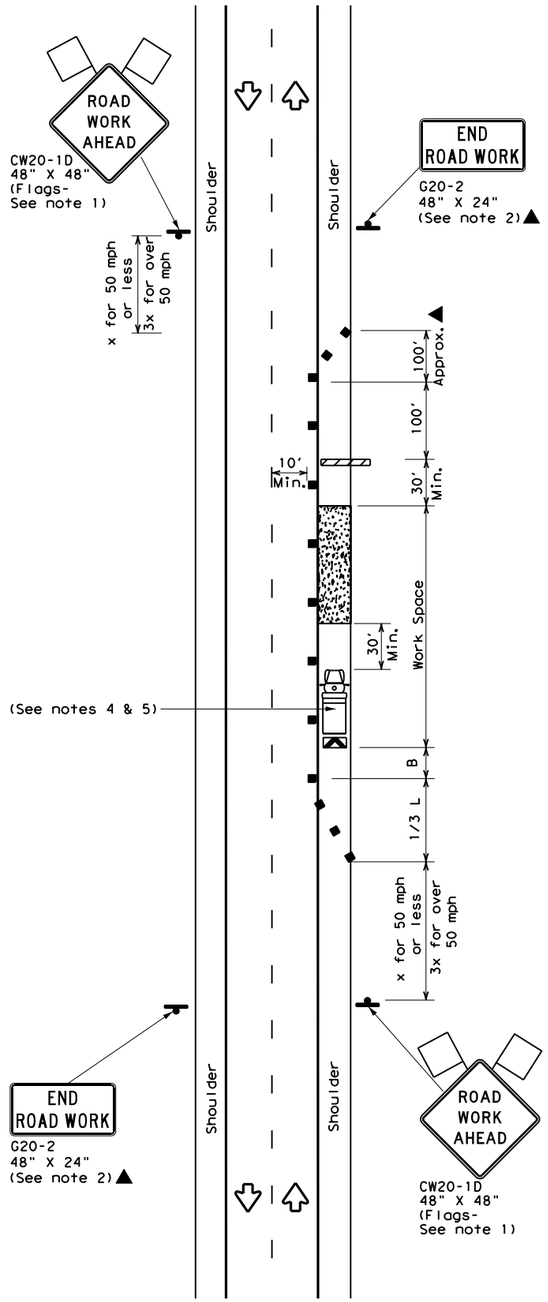

TCP (2-1b)

WORK SPACE ON SHOULDER
Conventional Roads

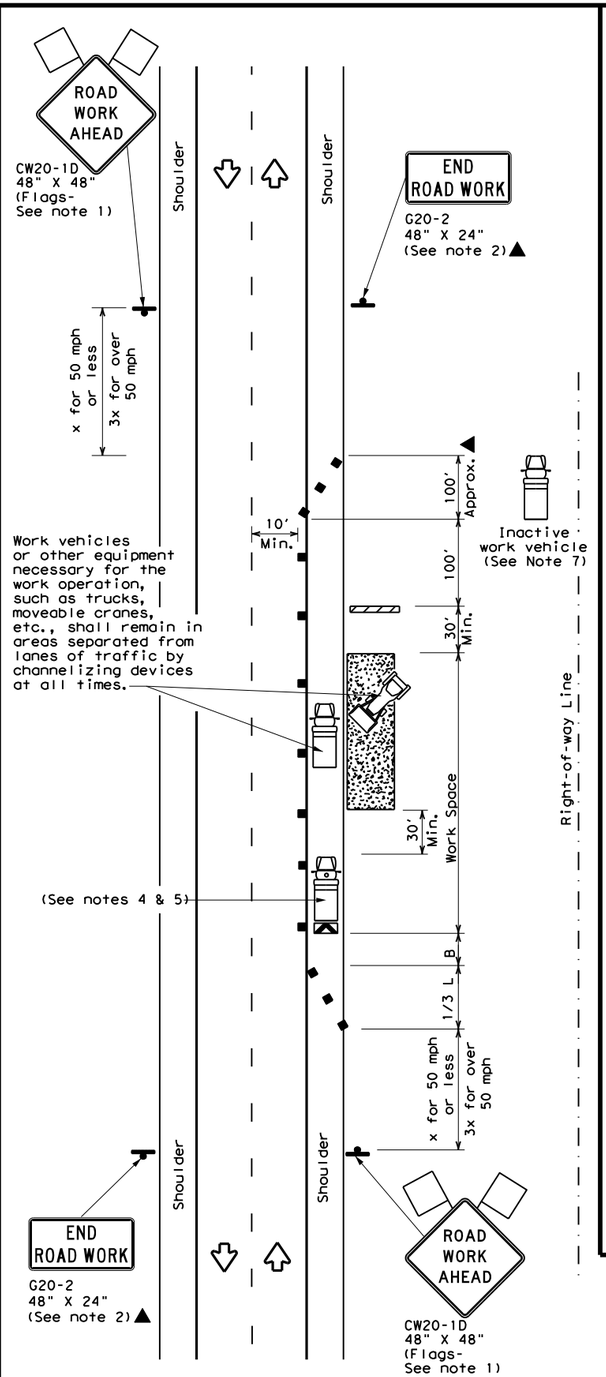

TCP (2-1c)

WORK VEHICLES ON SHOULDER
Conventional Roads

LEGEND			
	Type 3 Barricade		Channelizing Devices
	Heavy Work Vehicle		Truck Mounted Attenuator (TMA)
	Trailer Mounted Flashing Arrow Board	M	Portable Changeable Message Sign (PCMS)
	Sign		Traffic Flow
	Flag		Flagger

Posted Speed *	Formula	Minimum Desirable Taper Lengths ** 10' Offset	11' Offset	12' Offset	Suggested Maximum Spacing of Channelizing Devices: On a Taper	On a Tangent	Minimum Sign Spacing "X" Distance	Suggested Longitudinal Buffer Space "B"
30	$L=\frac{WS^2}{60}$	150'	165'	180'	30'	60'	120'	90'
35		205'	225'	245'	35'	70'	160'	120'
40		265'	295'	320'	40'	80'	240'	155'
45	L=WS	450'	495'	540'	45'	90'	320'	195'
50		500'	550'	600'	50'	100'	400'	240'
55		550'	605'	660'	55'	110'	500'	295'
60		600'	660'	720'	60'	120'	600'	350'
65		650'	715'	780'	65'	130'	700'	410'
70		700'	770'	840'	70'	140'	800'	475'
75		750'	825'	900'	75'	150'	900'	540'

* Conventional Roads Only

** Taper lengths have been rounded off.
L=Length of Taper(FT) W=Width of Offset(FT) S=Posted Speed(MPH)

TYPICAL USAGE				
MOBILE	SHORT DURATION	SHORT TERM STATIONARY	INTERMEDIATE TERM STATIONARY	LONG TERM STATIONARY
	✓	✓	✓	✓

GENERAL NOTES

1. Flags attached to signs where shown, are REQUIRED.
2. All traffic control devices illustrated are REQUIRED, except those denoted with the triangle symbol may be omitted when stated in the plans, or for routine maintenance work, when approved by the Engineer.
3. Stockpiled material should be placed a minimum of 30 feet from nearest traveled way.
4. Shadow Vehicle with TMA and high intensity rotating, flashing, oscillating or strobe lights. A Shadow Vehicle with a TMA should be used anytime it can be positioned 30 to 100 feet in advance of the area of crew exposure without adversely affecting the performance or quality of the work. If workers are no longer present but road or work conditions require the traffic control to remain in place, Type 3 Barricades or other channelizing devices may be substituted for the Shadow Vehicle and TMA.
5. Additional Shadow Vehicles with TMAs may be positioned off the paved surface, next to those shown in order to protect a wider work space.
6. See TCP(5-1) for shoulder work on divided highways, expressways and freeways.
7. Inactive work vehicles or other equipment should be parked near the right-of-way line and not parked on the paved shoulder.
8. CW21-5 "SHOULDER WORK" signs may be used in place of CW20-1D "ROAD WORK AHEAD" signs for shoulder work on conventional roadways.

Texas Department of Transportation

Traffic Operations Division Standard

TRAFFIC CONTROL PLAN CONVENTIONAL ROAD SHOULDER WORK

TCP(2-1)-18

FILE: tcp2-1-18.dgn	DN:	CK:	DW:	CK:
© TxDOT December 1985	CONT	SECT	JOB	HIGHWAY
REVISIONS	0055	15	072	US 84
2-94 4-98	DIST	COUNTY		SHEET NO.
8-95 2-12	WAC	MCLENNAN		48
1-97 2-18				

DISCLAIMER:
The use of this standard is governed by the "Texas Engineering Practice Act". No warranty of any kind is made by TxDOT for any purpose whatsoever. TxDOT assumes no responsibility for the conversion of this standard to other formats or for incorrect results or damages resulting from its use.

DATE:
FILE:

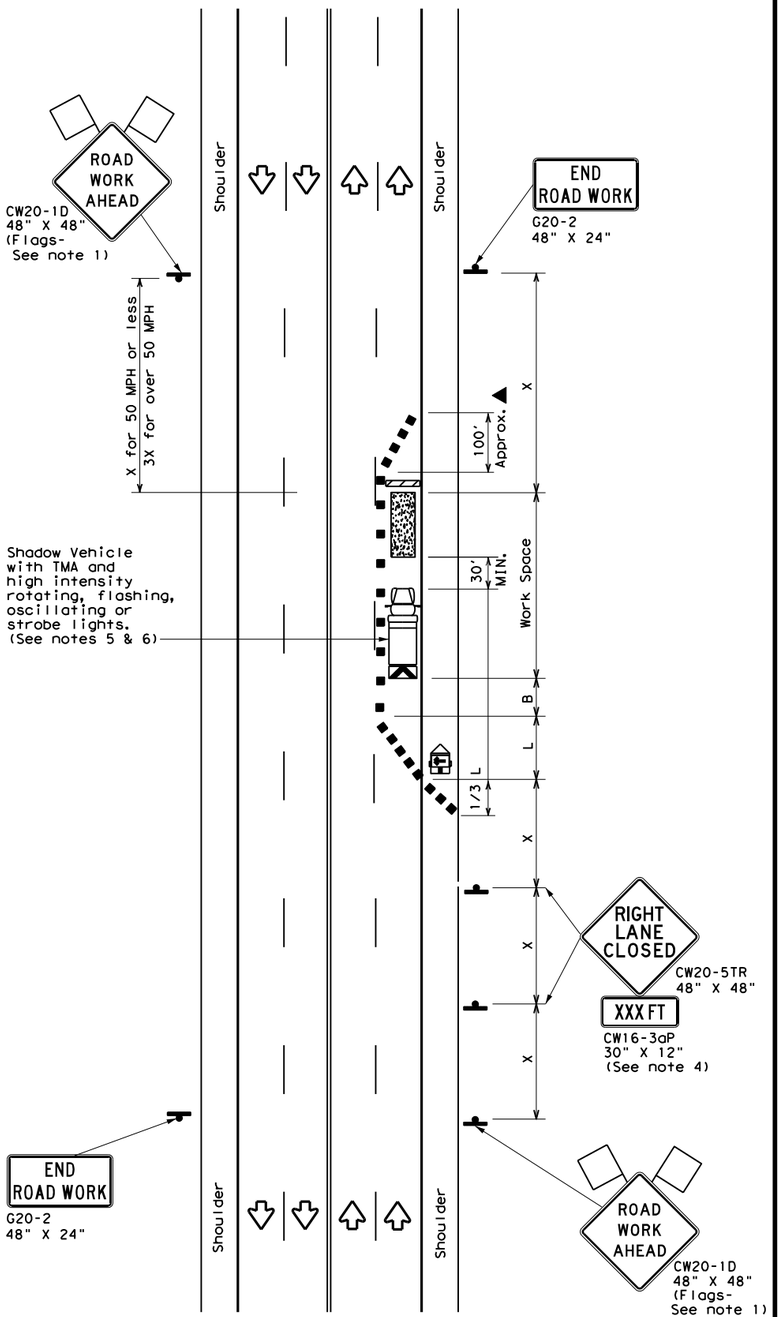

TCP (2-4a)

ONE LANE CLOSED

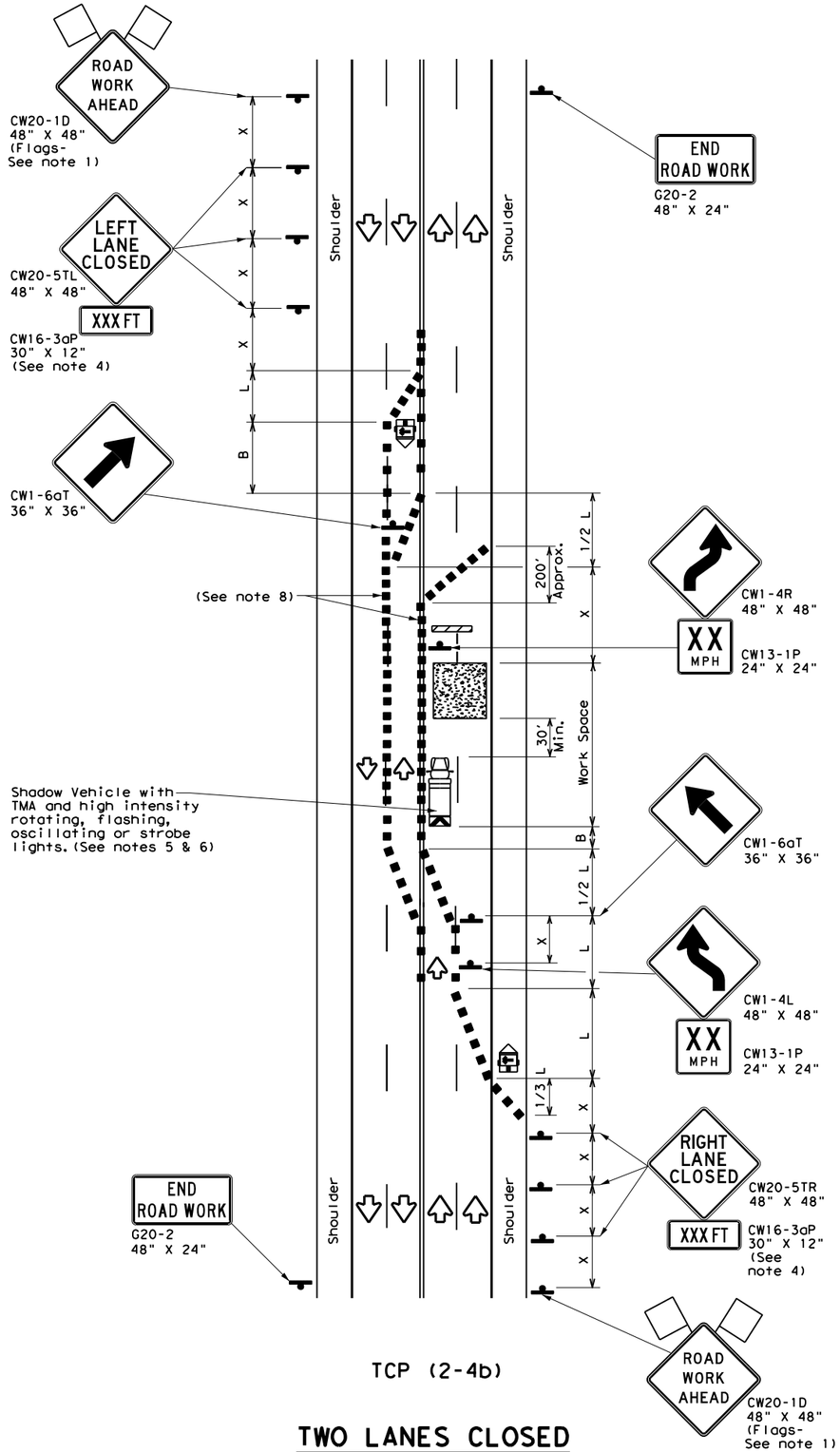

TCP (2-4b)

TWO LANES CLOSED

LEGEND			
	Type 3 Barricade		Channelizing Devices
	Heavy Work Vehicle		Truck Mounted Attenuator (TMA)
	Trailer Mounted Flashing Arrow Board	M	Portable Changeable Message Sign (PCMS)
	Sign		Traffic Flow
	Flag		Flagger

Posted Speed *	Formula	Minimum Desirable Taper Lengths ** 10' Offset	11' Offset	12' Offset	Suggested Maximum Spacing of Channelizing Devices: On a Taper	On a Tangent	Minimum Sign Spacing "X" Distance	Suggested Longitudinal Buffer Space "B"
30	$L=\frac{WS^2}{60}$	150'	165'	180'	30'	60'	120'	90'
35		205'	225'	245'	35'	70'	160'	120'
40		265'	295'	320'	40'	80'	240'	155'
45	L=WS	450'	495'	540'	45'	90'	320'	195'
50		500'	550'	600'	50'	100'	400'	240'
55		550'	605'	660'	55'	110'	500'	295'
60		600'	660'	720'	60'	120'	600'	350'
65		650'	715'	780'	65'	130'	700'	410'
70		700'	770'	840'	70'	140'	800'	475'
75		750'	825'	900'	75'	150'	900'	540'

* Conventional Roads Only

** Taper lengths have been rounded off.
L=Length of Taper(FT) W=Width of Offset(FT) S=Posted Speed(MPH)

TYPICAL USAGE				
MOBILE	SHORT DURATION	SHORT TERM STATIONARY	INTERMEDIATE TERM STATIONARY	LONG TERM STATIONARY
		✓	✓	

GENERAL NOTES

1. Flags attached to signs where shown, are REQUIRED.
2. All traffic control devices illustrated are REQUIRED, except those denoted with the triangle symbol may be omitted when stated elsewhere in the plans, or for routine maintenance work, when approved by the Engineer.
3. The downstream taper is optional. When used, it should be 100 feet minimum length per lane.
4. For short term applications, when post mounted signs are not used, the distance legend may be shown on the sign face rather than on a CW16-3aP supplemental plaque.
5. A Shadow Vehicle with a TMA should be used anytime it can be positioned 30 to 100 feet in advance of the area of crew exposure without adversely affecting the performance or quality of the work. If workers are no longer present but road or work conditions require the traffic control to remain in place, Type 3 Barricades or other channelizing devices may be substituted for the Shadow Vehicle and TMA.
6. Additional Shadow Vehicles with TMAs may be positioned in each closed lane, on the shoulder or off the paved surface, next to those shown in order to protect a wider work space.

TCP (2-4a)

7. If this TCP is used for a left lane closure, CW20-5TL "LEFT LANE CLOSED"signs shall be used and channelizing devices shall be placed on the centerline to protect the work space from opposing traffic with the arrow board placed in the closed lane near the end of the merging taper.

TCP (2-4b)

8. For shorter durations where traffic is directed over a yellow centerline, channelizing devices which separate two-way traffic should be spaced on tapers at 20' or 15' if posted speeds are 35 mph or slower, and for tangent sections, at 1/2(S) where S is the speed in mph. This tighter devices spacing is intended for the area of conflicting markings, not the entire work zone.

Texas Department of Transportation

Traffic Operations Division Standard

TRAFFIC CONTROL PLAN LANE CLOSURES ON MULTILANE CONVENTIONAL ROADS

TCP(2-4)-18

FILE: tcp2-4-18.dgn	DN:	CK:	DW:	CK:
© TxDOT December 1985	CONT	SECT	JOB	HIGHWAY
REVISIONS 8-95 3-03	0055	15	072	US 84
1-97 2-12	DIST	COUNTY		SHEET NO.
4-98 2-18	WAC	MCLENNAN		49

DISCLAIMER:
The use of this standard is governed by the "Texas Engineering Practice Act". No warranty of any kind is made by TxDOT for any purpose whatsoever. TxDOT assumes no responsibility for the conversion of this standard to other formats or for incorrect results or damages resulting from its use.

DATE:
FILE:

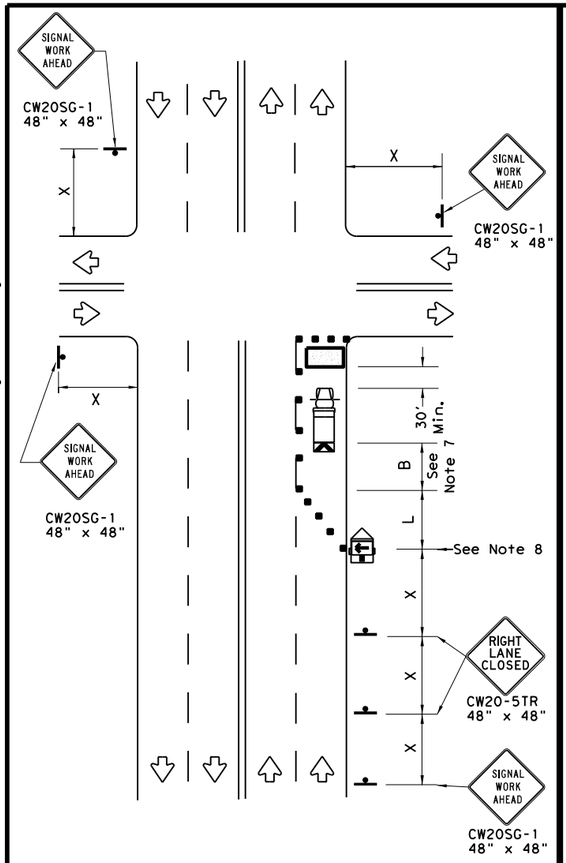

NEAR SIDE LANE CLOSURE

SHORT DURATION OR SHORT TERM STATIONARY

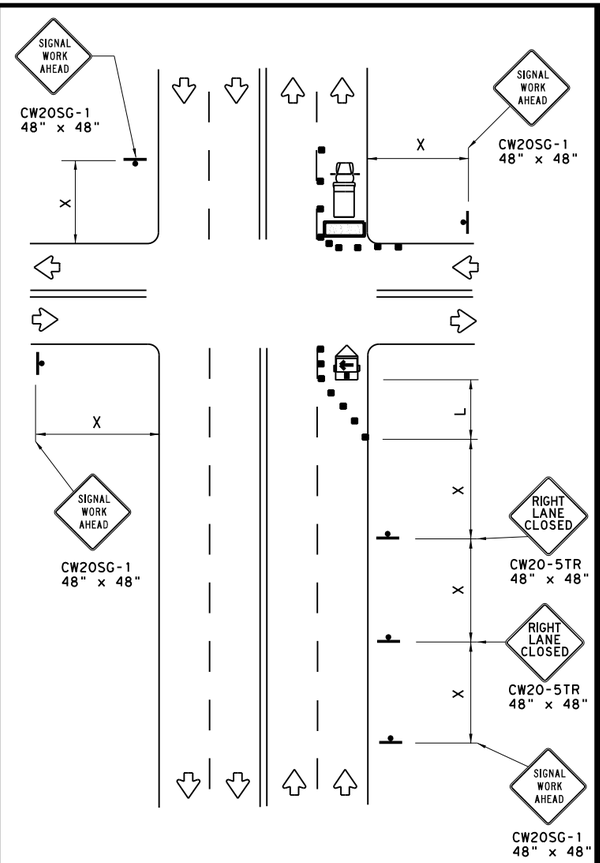

FAR SIDE RIGHT LANE CLOSURE

SHORT DURATION OR SHORT TERM STATIONARY

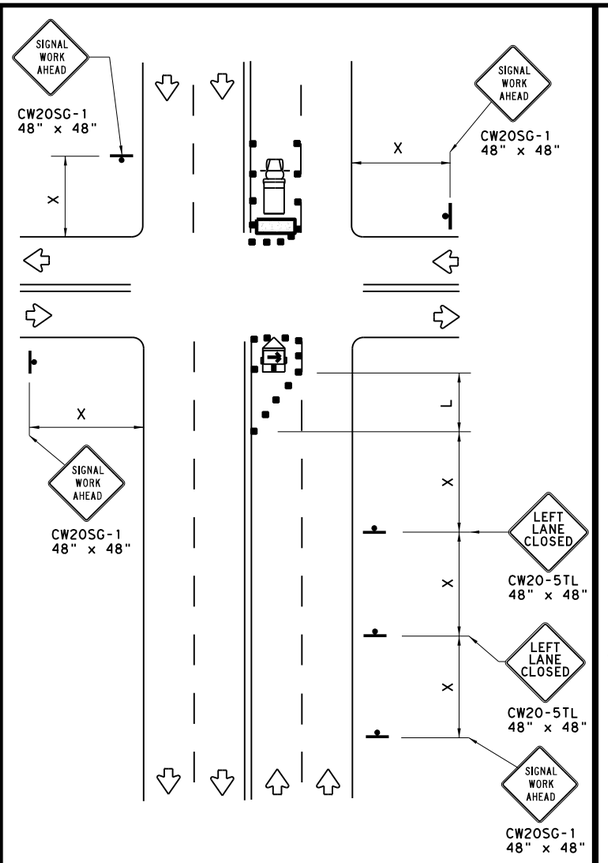

FAR SIDE LEFT LANE CLOSURE

SHORT DURATION OR SHORT TERM STATIONARY

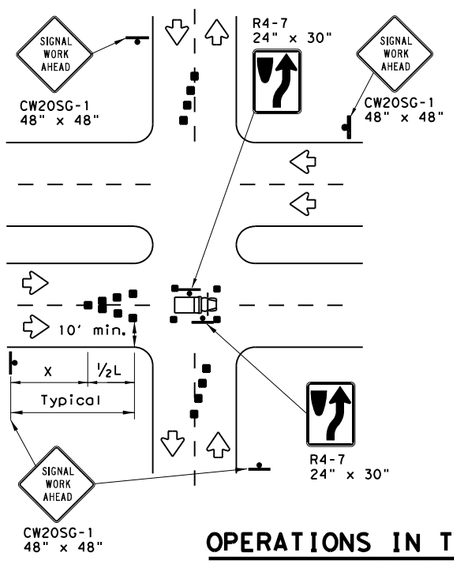

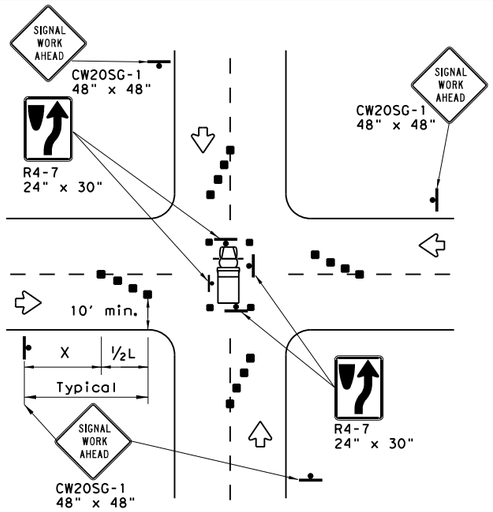

OPERATIONS IN THE INTERSECTION

SHORT DURATION

LEGEND			
	Type 3 Barricade		Channelizing Devices
	Heavy Work Vehicle		Truck Mounted Attenuator (TMA)
	Trailer Mounted Flashing Arrow Board	M	Portable Changeable Message Sign (PCMS)
	Sign		Traffic Flow
	Flag		Flagger

Posted Speed *	Formula	Minimum Desirable Taper Lengths ** 10' Offset	11' Offset	12' Offset	Suggested Maximum Spacing of Channelizing Devices: On a Taper	On a Tangent	Minimum Sign Spacing "X" Distance	Suggested Longitudinal Buffer Space "B"
30	$L = \frac{WS^2}{60}$	150'	165'	180'	30'	60'	120'	90'
35		205'	225'	245'	35'	70'	160'	120'
40		265'	295'	320'	40'	80'	240'	155'
45	L = WS	450'	495'	540'	45'	90'	320'	195'
50		500'	550'	600'	50'	100'	400'	240'
55		550'	605'	660'	55'	110'	500'	295'
60		600'	660'	720'	60'	120'	600'	350'
65		650'	715'	780'	65'	130'	700'	410'
70		700'	770'	840'	70'	140'	800'	475'
75		750'	825'	900'	75'	150'	900'	540'

* Conventional Roads Only

** Taper lengths have been rounded off.
L=Length of Taper(FT) W=Width of Offset(FT) S=Posted Speed(MPH)

WORKERS IN BUCKET TRUCKS SHALL NOT WORK ABOVE OPEN LANES OF TRAFFIC.

GENERAL NOTES

1. The minimum size channelizing device is the 28" cone. 42" Two-piece cones, drums, vertical panels or barricades will be required when the device must be left unattended at night.
2. Obstructions or hazards at the work area shall be clearly marked and delineated at all times.
3. Flaggers and Flagger Symbol (CW20-7) signs may be required according to field conditions.
4. Vehicles parked in roadway shall be equipped with at least two high intensity rotating, flashing, oscillating or strobe type lights.
5. High level warning devices (flag trees) may be used at corners of the vehicle.
6. When work operations are performed on existing signals, the signals may be placed in flashing red mode when approved by the engineer. If existing signals do not have power, All-Way Stop (R1-1 and R1-3P) signs may be implemented when approved by the engineer.
7. For Short-Term Stationary work the buffer space "B" from the above table should be used if field conditions permit. For Short Duration (less than 1 hour) any buffer space provided will enhance the safety of the setup.
8. The arrow board at this location may be omitted for Short Duration work if the work vehicle has an arrow board in operation. As an option, the arrow board may be placed at the end of the taper in the closed lane if space is not available at the beginning of the taper.
9. Signs and devices for the NEAR SIDE LANE CLOSURE may be altered for a left lane closure by using a LEFT LANE CLOSED (CW20-5TL) and adding channelizing devices on the centerline to protect the work space from opposing traffic.

Texas Department of Transportation

Traffic Operations Division Standard

TRAFFIC SIGNAL WORK TYPICAL DETAILS

WZ(BTS-1)-13

FILE: wzbts-13.dgn	DN: TxDOT	CK: TxDOT	DW: TxDOT	CK: TxDOT
© TxDOT April 1992	CONT	SECT	JOB	HIGHWAY
REVISIONS	0055	15	072	US 84
2-98 10-99 7-13	DIST	COUNTY		SHEET NO.
4-98 3-03	WAC	MCLENNAN		50

DISCLAIMER:
The use of this standard is governed by the "Texas Engineering Practice Act". No warranty of any kind is made by TxDOT for any purpose whatsoever. TxDOT assumes no responsibility for the conversion of this standard to other formats or for incorrect results or damages resulting from its use.

DATE:
FILE:

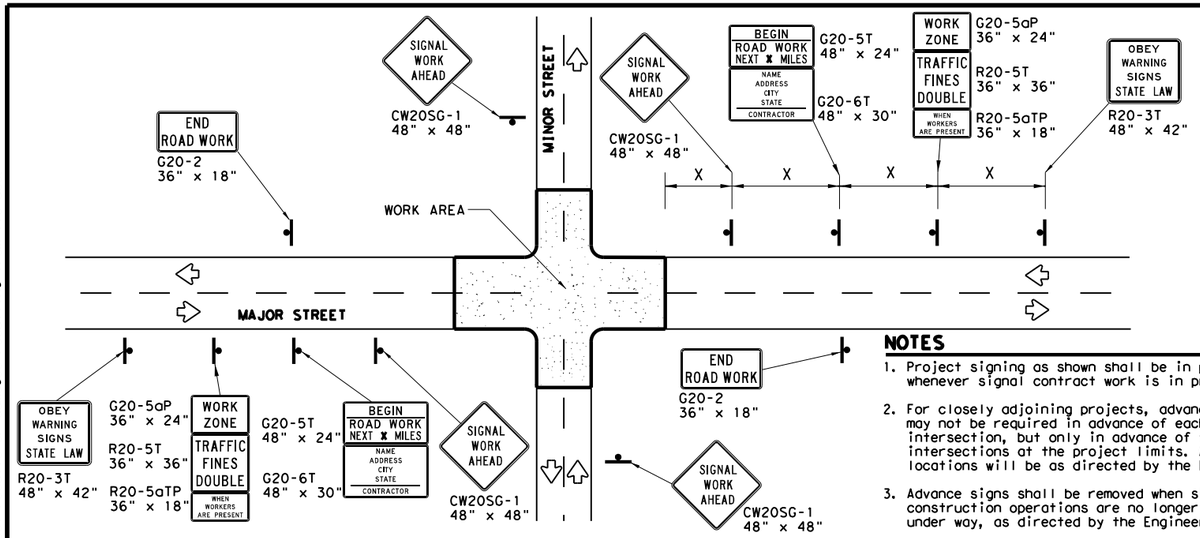

TYPICAL ADVANCE SIGNAL PROJECT SIGNING

FOR LONG TERM and INTERMEDIATE-TERM STATIONARY WORK OPERATIONS

NOTES

1. Project signing as shown shall be in place whenever signal contract work is in progress.
2. For closely adjoining projects, advance signing may not be required in advance of each intersection, but only in advance of the intersections at the project limits. Actual locations will be as directed by the Engineer.
3. Advance signs shall be removed when signal construction operations are no longer under way, as directed by the Engineer.
4. Warning sign spacing shown is typical for both directions.
5. See the Table on sheet 1 of 2 for Typical warning sign spacing.

GENERAL NOTES FOR WORK ZONE SIGNS

1. Signs shall be installed and maintained in a straight and plumb condition.
2. Wooden sign posts shall be painted white.
3. Barricades shall NOT be used as sign supports.
4. Nails shall NOT be used to attach signs to any support.
5. All signs shall be installed in accordance with the plans or as directed by the Engineer.
6. The Contractor shall furnish the sign design shown in the plans or in the "Standard Highway Sign Designs for Texas" (SHSD).
7. The Contractor shall furnish sign supports and substrates listed in the "Compliant Work Zone Traffic Control Device List" (CWZTCD), installed as per the manufacturer's recommendations.
8. Temporary signs that have damaged or cracked substrates and/or damaged or marred reflective sheeting shall be replaced as directed by the Engineer.
9. Identification markings may be shown only on the back of the sign substrate. The maximum height of letters and/or company logos used for identification shall be 1".
10. Damaged wood posts shall be replaced. Splicing wood posts will not be allowed.

DURATION OF WORK

1. Work zone durations are defined in Part 6, Section 6G.02 of the Texas Manual on Uniform Traffic Control Devices (TMUTCD).

SIGN MOUNTING HEIGHT

1. Sign height of Long-term/Intermediate-term warning signs shall be as shown on Figure 6F-1 of the TMUTCD.
2. Sign height of Short-term/Short Duration warning signs shall be as shown on Figure 6F-2 of the TMUTCD.
3. Regulatory signs shall be mounted at least 7 feet, but not more than 9 feet, above the paved surface regardless of work duration.

REMOVING OR COVERING

1. When sign messages may be confusing or do not apply, the signs shall be removed or completely covered, unless otherwise approved by the Engineer.
2. When signs are covered, the material used shall be opaque, such as heavy mil black plastic, or other materials which will cover the entire sign face and maintain their opaque properties under automobile headlights at night without damaging the sign sheeting. Burlap, or heavy materials such as plywood or aluminum shall not be used to cover signs.
3. Duct tape or other adhesive material shall NOT be affixed to a sign face.
4. Signs and anchor stubs shall be removed and holes back filled upon completion of the work.

REFLECTIVE SHEETING

1. All signs shall be retroreflective and constructed of sheeting meeting the requirements of the DMS and color usage table shown on this sheet.

SIGN SUPPORT WEIGHTS

1. Weights used to keep signs from turning over should be sandbags filled with dry, cohesionless material.
2. The sandbags will be tied shut to keep the sand from spilling and to maintain a constant weight.
3. Rock, concrete, iron, steel or other solid objects will not be permitted for use as sign support weights.
4. Sandbags should weigh a minimum of 35 lbs and a maximum of 50 lbs.
5. Sandbags shall be made of a durable material that tears upon vehicular impact. Rubber, such as tire inner tubes, shall not be used.
6. Rubber ballasts designed for channelizing devices should not be used for ballast on portable sign supports. Sign supports designed and manufactured with rubber bases may be used when shown on the CWZTCD list.
7. Sandbags shall only be placed along or laid over the base supports of the traffic control device and shall not be suspended above ground level or hung with rope, wire, chains or other fastners. Sandbags shall be placed along the length of the skids to weigh down the sign support.
8. Sandbags shall NOT be placed under the skid and shall not be used to level sign supports placed on slopes.

LEGEND	
	Sign
	Channelizing Devices
	Type 3 Barricade

DEPARTMENTAL MATERIAL SPECIFICATIONS	
SIGN FACE MATERIALS	DMS-8300
FLEXIBLE ROLL-UP REFLECTIVE SIGNS	DMS-8310

COLOR	USAGE	SHEETING MATERIAL
ORANGE	BACKGROUND	TYPE B_{FL} OR TYPE C_{FL} SHEETING
WHITE	BACKGROUND	TYPE A SHEETING
BLACK	LEGEND & BORDERS	ACRYLIC NON-REFLECTIVE SHEETING

Only pre-qualified products shall be used. A copy of the "Compliant Work Zone Traffic Control Devices List" (CWZTCD) describes pre-qualified products and their sources and may be found at the following web address:
http://www.txdot.gov/txdot_library/publications/construction.htm

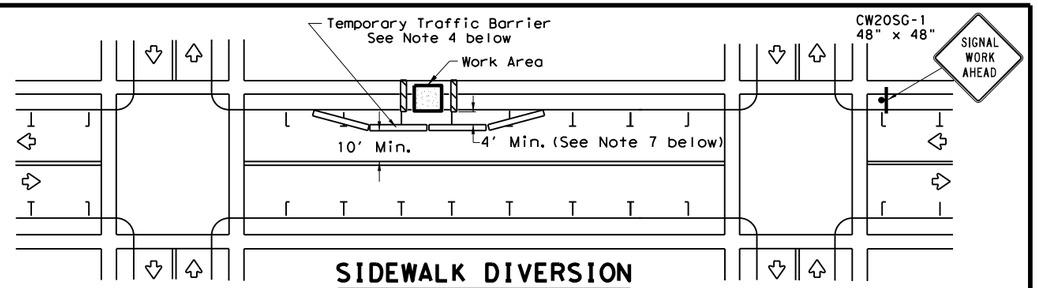

SIDEWALK DIVERSION

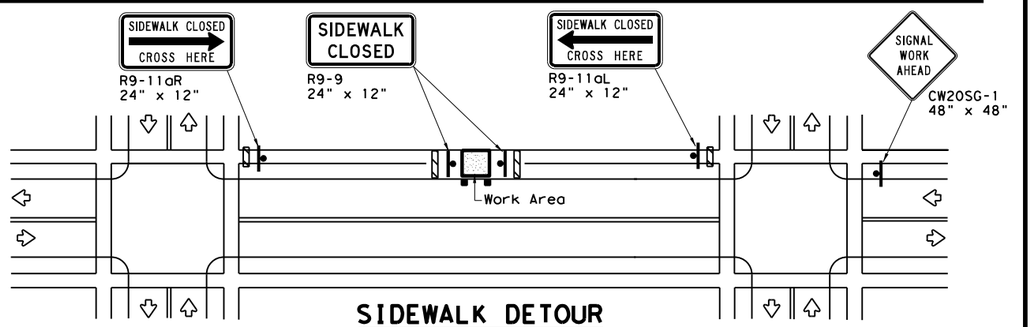

SIDEWALK DETOUR

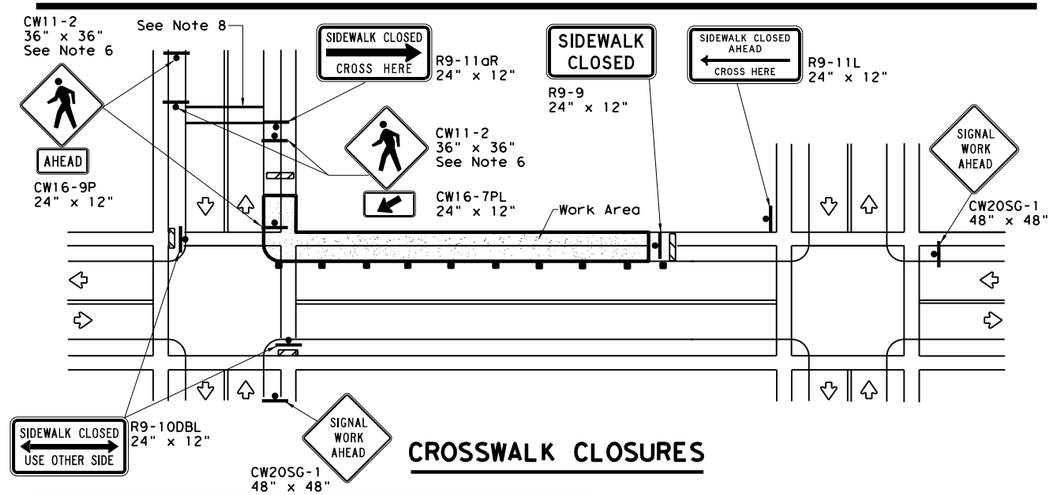

CROSSWALK CLOSURES

PEDESTRIAN CONTROL

1. Holes, trenches or other hazards shall be adequately protected by covering, delineating or surrounding the hazard with orange plastic pedestrian fencing or longitudinal channelizing devices, or as directed by the Engineer.
2. "CROSSWALK CLOSURES" as detailed above will require the Engineer's approval prior to installation.
3. R9 series signs shown may be placed on supports detailed on the BC standards or CWZTCD list, or when fabricated from approved lightweight plastic substrates, they may be mounted on top of a plastic drum at or near the location shown.
4. For speeds less than 45 mph longitudinal channelizing devices may be used instead of traffic barriers when approved by the Engineer. Attenuation of blunt ends and installation of water filled devices shall be as per BC(9) and manufacturer's recommendations.
5. Location of devices are for general guidance. Actual device spacing and location must be field adjusted to meet actual conditions.
6. Where pedestrians with visual disabilities normally use the closed sidewalk Detectable Pedestrian Barricades should be used instead of the Type 3 Barricades shown.
7. The width of existing sidewalk should be maintained if practical.
8. Pavement markings for mid-block crosswalks shall be paid for under the appropriate bid items.
9. When crosswalks or other pedestrian facilities are closed or relocated, temporary facilities shall be detectable and shall include accessibility features consistent with the features present in the existing pedestrian facility.

Texas Department of Transportation

Traffic Operations Division Standard

TRAFFIC SIGNAL WORK BARRICADES AND SIGNS

WZ(BTS-2)-13

FILE: wzbts-13.dgn	DN: TxDOT	CK: TxDOT	DW: TxDOT	CK: TxDOT
©TxDOT April 1992	CONT	SECT	JOB	HIGHWAY
REVISIONS	0055	15	072	US 84
2-98 10-99 7-13	DIST	COUNTY		SHEET NO.
4-98 3-03	WAC	MCLENNAN		51

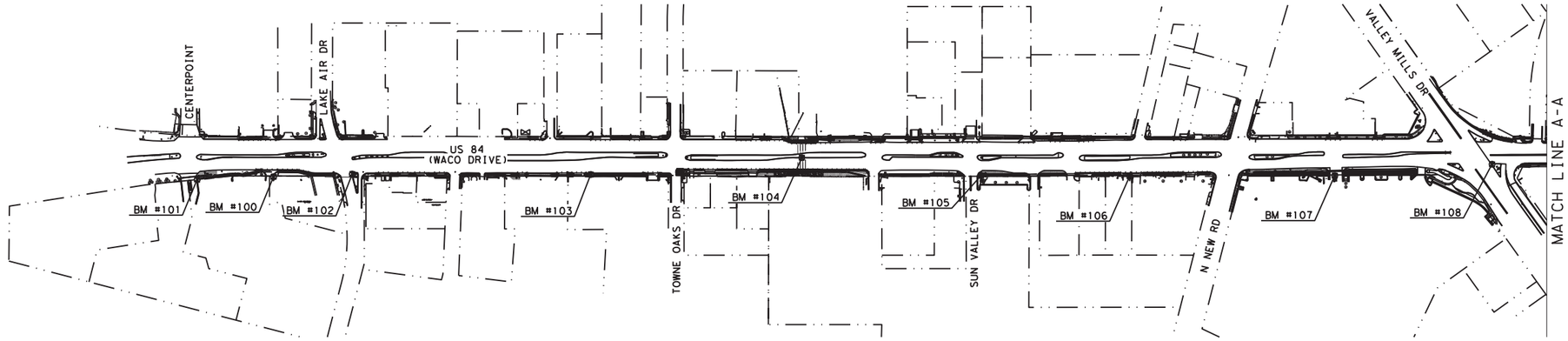

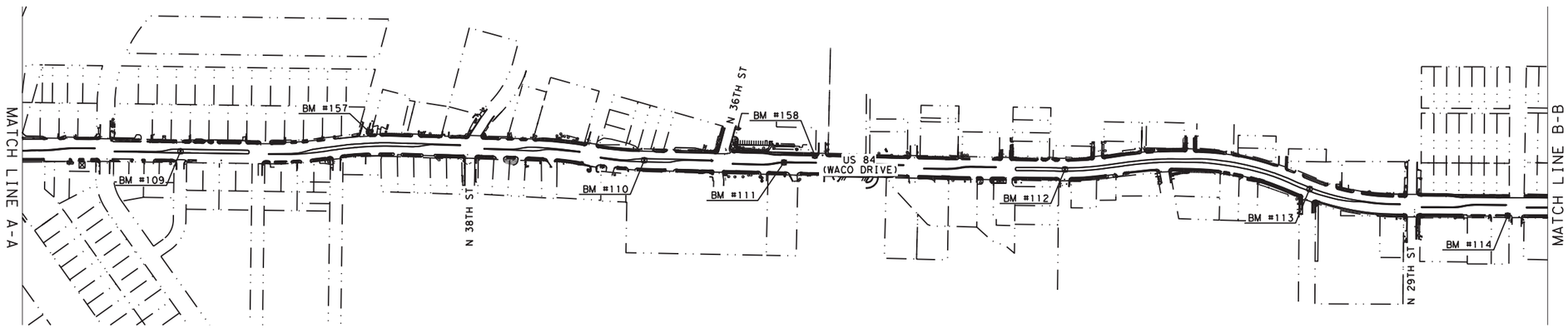

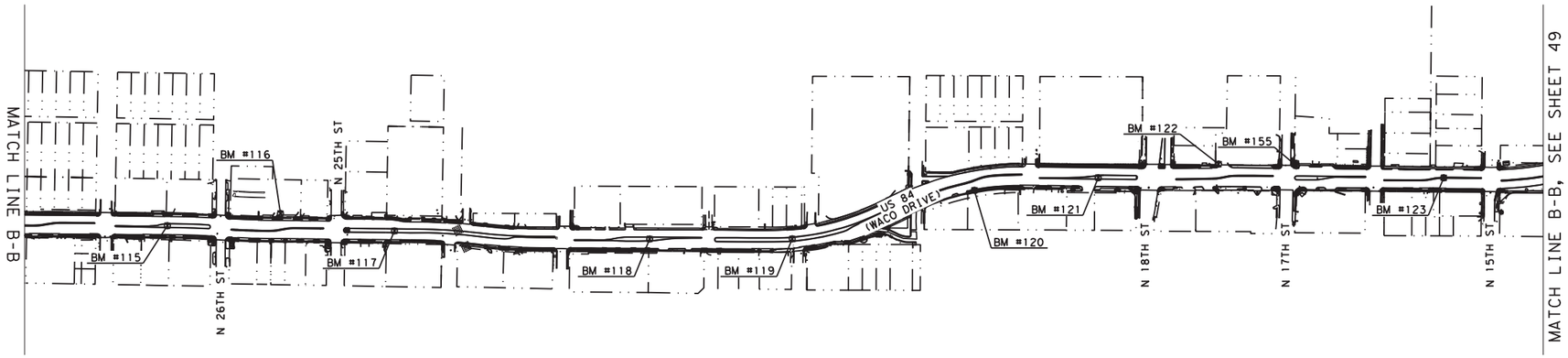

FILENAME: pw:\\kh-pw.bentley.com:kh-pw-01\Documents\01 Active Projects\TX-FTW-063586010 - US 84 (Waco Drive)\WAC 005515072\4 - Design\Plan Set\3. Roadway\US84_RDW_SC01.dgn
PLOTTED: 12/21/2020

PROJECT: US84 RTZ

FROM: CENTERPOINT

TO: FM 933 (CLIFTON STREET)

CSJ: 0055-15-072

NOTES

1. COORDINATES AND DISTANCES ARE IN US SURVEY FEET, DISPLAYED IN SURFACE VALUES UTILIZING A SURFACE ADJUSTMENT FACTOR OF 1.00012.
2. HORIZONTAL CONTROL IS BASED ON THE TEXAS STATE PLANE COORDINATE SYSTEM, NAD-83(2011), CENTRAL ZONE (4203).

N

0' 500' 1000'

STATE OF TEXAS
SCOTT R. ARNOLD
96782
LICENSED
PROFESSIONAL ENGINEER

Scott R. Arnold, P.E.
12/21/2020

Kimley»Horn F-928

© 2021
Texas Department of Transportation

SURVEY CONTROL INDEX SHEET

SHEET 1 OF 3

FED.RD. DIV.NO.	PROJECT ID.	HIGHWAY NO.
6	(SEE TITLE SHEET)	US 84

STATE	DIST.	COUNTY	SHEET NO.
TEXAS	WAC	MCLENNAN	52
CONT.	SECT.	JOB	
0055	15	072	

PROJECT: US84 RTZ

FROM: CENTERPOINT

TO: FM 933 (CLIFTON STREET)

CSJ: 0055-15-072

NOTES

1. COORDINATES AND DISTANCES ARE IN US SURVEY FEET, DISPLAYED IN SURFACE VALUES UTILIZING A SURFACE ADJUSTMENT FACTOR OF 1.00012.
2. HORIZONTAL CONTROL IS BASED ON THE TEXAS STATE PLANE COORDINATE SYSTEM, NAD-83(2011), CENTRAL ZONE (4203).

N

0' 500' 1000'

STATE OF TEXAS
SCOTT R. ARNOLD
96782
LICENSED
PROFESSIONAL ENGINEER

Scott R. Arnold, P.E.

12/21/2020

Kimley»Horn F-928

© 2021

Texas Department of Transportation

SURVEY CONTROL INDEX SHEET

SHEET 2 OF 3

FED.RD. DIV.NO.	PROJECT ID.	HIGHWAY NO.
6	(SEE TITLE SHEET)	US 84

STATE	DIST.	COUNTY	SHEET NO.
TEXAS	WAC	MCLENNAN	53
CONT.	SECT.	JOB	
0055	15	072	

FILENAME: pw:\\kh-pw.bentley.com:kh-pw-01\Documents\01 Active Projects\TX-FTW-063586010 - US 84 (Waco Drive)\WAC 0055150721\4 - Design\Plan Set\3. Roadway\US84_RDW_SC02.dgn
PLOTTED: 12/21/2020

BENCHMARK INFORMATION - US84 (WACO DRIVE)

BENCHMARK NO.	NORTHING	EASTING	ELEVATION	DESCRIPTION
BM#100	10531532.60'	3279371.13'	589.52'	"+" CUT ON THE SOUTHEAST RIGHT-OF-WAY LINE OF WACO DRIVE, 22'+/- SOUTHWEST OF A FIRE HYDRANT, 250'+/- SOUTHWEST OF THE LAKE AIR INTERSECTION, AND 11'+/- SOUTHWEST OF A WATER METER.
BM#101	10531309.65'	3279184.76'	586.34'	"+" CUT ON THE SOUTHEAST RIGHT-OF-WAY LINE OF WACO DRIVE, 3'+/- SOUTHEAST OF A WATER METER, 37'+/- SOUTHWEST FROM A TRAFFIC SIGN, AND 94'+/- NORTHEAST OF A TRAFFIC CONTROL BOX.
BM#102	10531761.36'	3279563.64'	589.09'	"+" CUT ON THE SOUTHEAST RIGHT-OF-WAY LINE OF WACO DRIVE, 16'+/- WEST OF A WATER METER, 4'+/- NORTHWEST OF AN ELECTRIC BOX, AND 44'+/- SOUTHWEST OF A STOP SIGN.
BM#103	10532433.57'	3280170.99'	563.32'	"+" CUT ON THE SOUTHEAST RIGHT-OF-WAY LINE OF WACO DRIVE, 15'+/- NORTHEAST OF A STORM SEWER MANHOLE, 13'+/- NORTHEAST OF A WATER METER, AND 81'+/- NORTHEAST OF A 45 MILES PER HOUR STREET SIGN.
BM#104	10533072.13'	3280659.82'	546.15'	"+" CUT ON THE SOUTH LINE OF A MEDIUM ON THE CENTER OF WACO DRIVE, 96'+/- NORTH OF A WATER VALVE, 93'+/- SOUTHWEST FROM A SEWER MANHOLE, AND 143'+/- NORTHEAST OF AN AT&T TELEPHONE BOX.
BM#105	10533533.26'	3281166.01'	546.87'	"+" CUT ON THE SOUTHEAST RIGHT-OF-WAY LINE OF WACO DRIVE, 4'+/- NORTH OF A WATER VALVE, 9'+/- SOUTHEAST OF AN ELECTRIC HAND HOLE, AND 17'+/- SOUTHWEST OF A WATER METER.
BM#106	10533950.61'	3281545.88'	555.15'	"+" CUT ON THE SOUTHEAST RIGHT-OF-WAY LINE OF WACO DRIVE, 142'+/- SOUTHEAST OF A 45 MILES PER HOUR STREET SIGN, 65'+/- NORTHEAST OF A BUS STOP SIGN, AND 91'+/- SOUTHWEST OF AN ELECTRIC BOX.
BM#107	10534531.20'	3282065.20'	556.19'	"+" CUT ON THE SOUTHEAST RIGHT-OF-WAY LINE OF WACO DRIVE, 26'+/- NORTHEAST OF A FIBER OPTIC SIGN, 36'+/- SOUTHWEST OF A STOP SIGN, 33'+/- NORTHEAST OF AN ELECTRIC BOX.
BM#108	10535004.31'	3282432.83'	564.78'	"+" CUT ON THE SOUTHEAST RIGHT-OF-WAY LINE OF WACO DRIVE, 20'+/- SOUTHWEST OF A TRAFFIC SIGN, 29'+/- SOUTHWEST OF A SEWER MANHOLE, 37'+/- NORTHWEST OF A WATER METER.
BM#109	10535647.40'	3282966.74'	562.26'	"+" CUT IN THE CENTER OF WACO DRIVE, 55'+/- NORTHWEST OF A FIRE HYDRANT, 53'+/- NORTHWEST OF A STOP SIGN, AND 44'+/- EAST OF A WATER METER.
BM#110	10536991.01'	3284224.22'	534.35'	"+" CUT IN THE CENTER OF WACO DRIVE, 39'+/- SOUTHEAST OF A WATER METER, 85'+/- SOUTHWEST OF A WATER VAULT, AND 92'+/- NORTHEAST OF A TELEPHONE BOX.
BM#111	10537397.00'	3284601.52'	518.12'	"+" CUT IN THE CENTER OF WACO DRIVE, 35'+/- SOUTHEAST OF A LIGHT POLE, 71'+/- NORTHEAST OF A WATER METER, AND 108'+/- SOUTHWEST OF A STORM SEWER MANHOLE.
BM#112	10538206.87'	3285367.82'	508.21'	"+" CUT IN THE CENTER OF WACO DRIVE, 39'+/- NORTHWEST FROM A SANITARY SEWER MANHOLE, 60'+/- NORTHWEST FROM A FIRE HYDRANT, AND 57'+/- NORTHWEST OF AN AT&T TELEPHONE BOX.
BM#113	10538876.31'	3286075.05'	499.73'	"+" CUT IN THE CENTER OF WACO DRIVE, 48'+/- NORTHEAST OF A STORM SEWER MANHOLE, 58'+/- NORTHWEST OF A STOP SIGN, AND 48'+/- SOUTHWEST OF A LIGHT POLE.
BM#114	10539389.24'	3286679.23'	477.88'	"+" CUT ON THE SOUTHEAST RIGHT-OF-WAY LINE OF WACO DRIVE, 2'+/- EAST OF A STORM SEWER MANHOLE, 36'+/- NORTHEAST OF A WATER METER, AND 45'+/- SOUTHWEST OF A SANITARY SEWER.
BM#115	10539911.54'	3287106.64'	475.33'	"+" CUT ON A MEDIAN IN THE CENTER OF WACO DRIVE, 38'+/- SOUTHEAST FROM A LIGHT POLE, 175'+/- SOUTHWEST OF A SANITARY SEWER MANHOLE, AND 182'+/- SOUTHWEST OF A TELEPHONE MANHOLE.
BM#116	10540244.26'	3287347.01'	486.31'	"+" CUT ON THE NORTHWEST RIGHT-OF-WAY LINE OF WACO DRIVE, 16'+/- NORTHEAST OF A WATER VALVE, 83'+/- SOUTHWEST OF A WATER METER, 101'+/- NORTHWEST OF A "GOLDSTAR FINANCE" SIGN.
BM#117	10540508.19'	3287668.95'	477.12'	"+" CUT IN THE CENTER OF WACO DRIVE, 42'+/- WEST OF A WATER METER, 59'+/- NORTHWEST OF A NATURAL GAS METER, AND 59'+/- SOUTHEAST OF A CABLE TV BOX.
BM#118	10541173.27'	3288307.04'	474.66'	"+" CUT IN THE CENTER OF WACO DRIVE, 36'+/- NORTHWEST FROM A WATER METER, 47'+/- SOUTHEAST OF A LIGHT POLE, AND 195'+/- SOUTHWEST OF A STOP SIGN.
BM#119	10541555.91'	3288651.02'	472.03'	"+" CUT IN THE CENTER OF WACO DRIVE, 61'+/- NORTHWEST OF A SANITARY SEWER MANHOLE, 63'+/- WEST OF A STOP SIGN, AND 62'+/- SOUTHWEST OF A FIRE HYDRANT.
BM#120	10542161.78'	3288960.76'	466.81'	"+" CUT ON THE SOUTHEAST RIGHT-OF-WAY LINE OF WACO DRIVE, 2'+/- NORTHEAST OF A STORM SEWER MANHOLE, 79'+/- OF A LIGHT POLE, AND 151'+/- NORTHEAST OF A SANITARY SEWER MANHOLE.
BM#121	10542524.29'	3289226.05'	469.61'	"+" CUT IN THE CENTER OF WACO DRIVE, 41'+/- NORTHWEST OF A POWER POLE, 107'+/- SOUTHWEST OF A "SH 84 EAST" STREET SIGN, AND 128'+/- SOUTHWEST OF A FIRE HYDRANT.
BM#122	10542879.98'	3289480.16'	473.32'	"+" CUT ON THE NORTHEAST RIGHT-OF-WAY LINE OF WACO DRIVE, 22'+/- NORTHEAST OF A HOSPITAL SIGN, 77'+/- NORTHWEST OF A TELEPHONE MANHOLE, AND 84'+/- NORTHWEST OF A SANITARY SEWER MANHOLE.
BM#123	10543450.89'	3290060.75'	475.77'	"+" CUT IN THE CENTER OF WACO DRIVE, 31'+/- SOUTHEAST OF A LIGHT POLE, 53'+/- NORTH OF A TELEPHONE MANHOLE, AND 70'+/- SOUTHWEST OF A POWER POLE.
BM#124	10543799.47'	3290337.84'	468.26'	"+" CUT IN THE CENTER OF WACO DRIVE, 61'+/- NORTHEAST FROM A LIGHT POLE, 136'+/- SOUTHWEST FROM A POWER POLE, AND 227'+/- NORTHEAST OF A TELEPHONE MANHOLE.
BM#125	10544754.90'	3290587.17'	475.74'	"+" CUT IN THE CENTER OF WACO DRIVE, 42'+/- NORTHWEST OF A WATER METER, 36'+/- SOUTHEAST OF A LIGHT POLE, AND 135'+/- SOUTHWEST OF A TRAFFIC CONTROL BOX.
BM#126	10545093.93'	3290776.97'	463.38'	"+" CUT IN THE CENTER OF WACO DRIVE, 37'+/- SOUTHEAST OF A LIGHT POLE, 54'+/- SOUTHEAST OF A SANITARY SEWER MANHOLE, AND 123'+/- SOUTHWEST OF A STORM SEWER MANHOLE.
BM#127	10545389.78'	3291039.47'	450.22'	"+" CUT IN THE CENTER OF WACO DRIVE, 53'+/- EAST OF A SANITARY SEWER MANHOLE, 35'+/- SOUTHEAST OF A WATER METER, AND 123'+/- SOUTHWEST OF A STORM SEWER MANHOLE.
BM#128	10545673.82'	3291294.35'	440.61'	"+" CUT IN THE CENTER OF WACO DRIVE, 32'+/- SOUTHEAST OF A LIGHT POLE, 51'+/- EAST OF A SANITARY SEWER, AND 55'+/- NORTHWEST OF A WATER METER.
BM#129	10545983.43'	3291574.07'	435.31'	"+" CUT IN THE CENTER OF WACO DRIVE, 40'+/- NORTHWEST OF A STORM SEWER MANHOLE, 52'+/- EAST OF A "RIGHT LANE MUST TURN RIGHT" STREET SIGN, AND 39'+/- SOUTHEAST OF A LIGHT POLE.
BM#131	10547381.80'	3292384.71'	435.81'	"+" CUT IN THE CENTER OF WACO DRIVE, 49'+/- NORTHWEST OF A "40 MILES PER HOUR" STREET SIGN, 46'+/- SOUTHEAST OF A TRAFFIC CONTROL BOX, AND 38'+/- SOUTHEAST OF A LIGHT POLE.
BM#151	10551202.74'	3295190.28'	395.78'	CITY OF WACO BENCHMARK "CW-13-010" ON THE NORTHEAST RIGHT-OF-WAY LINE OF WACO DRIVE, 3'+/- OF A STORM SEWER MANHOLE, 9'+/- SOUTH OF A "TOWING ENFORCED" SIGN, AND 29'+/- NORTHEAST OF A WATER VALVE.
BM#152	10544922.40'	3290602.40'	469.94'	CITY OF WACO BENCHMARK "CW-09-193" ON THE SOUTHEAST RIGHT-OF-WAY LINE OF WACO DRIVE, 2'+/- NORTH OF A STORM SEWER MANHOLE, 18'+/- NORTHWEST OF A TRAFFIC FLOW DIRECTION ARROW, AND 26'+/- SOUTHEAST OF A TRAFFIC SIGNAL.
BM#154	10544439.43'	3291093.99'	461.91'	CITY OF WACO BENCHMARK "CW-09-333" ON THE SOUTHWEST RIGHT-OF-WAY LINE OF NORTH 12TH STREET, 556'+/- SOUTHEAST OF A WATER METER, 569'+/- SOUTHEAST OF AN ELECTRIC BOX, AND 588'+/- SOUTHEAST OF A TRAFFIC CONTROL BOX.
BM#155	10543084.39'	3289672.39'	476.52'	CITY OF WACO BENCHMARK "CW-09-331" ON THE NORTHEAST RIGHT-OF-WAY LINE OF WACO DRIVE, 3'+/- NORTHEAST OF A STORM SEWER MANHOLE, 39'+/- NORTHEAST OF A SANITARY SEWER MANHOLE, AND 88'+/- SOUTHWEST OF A 40 MILES PER HOUR STREET SIGN.
BM#157	10536254.35'	3283409.66'	557.59'	CITY OF WACO BENCHMARK "CW-13-056" ON THE NORTHEAST RIGHT-OF-WAY LINE OF WACO DRIVE, 2'+/- SOUTHEAST FROM A STORM SEWER MANHOLE, 8'+/- NORTHEAST OF A WATER VALVE, AND 23'+/- NORTHEAST OF A SANITARY SEWER MANHOLE.
BM#158	10537506.10'	3284663.70'	512.74'	CITY OF WACO BENCHMARK "CW-13-031" ON THE NORTHEAST RIGHT-OF-WAY LINE OF WACO DRIVE, 3'+/- NORTHEAST OF A STORM SEWER MANHOLE, 3'+/- SOUTHWEST OF A LIGHT POLE, AND 9'+/- SOUTHEAST OF A POWER POLE.

PROJECT: US84 RTZ

FROM: CENTERPOINT

TO: FM 933 (CLIFTON STREET)

CSJ: 0055-15-072

NOTES

1. COORDINATES AND DISTANCES ARE IN US SURVEY FEET, DISPLAYED IN SURFACE VALUES UTILIZING A SURFACE ADJUSTMENT FACTOR OF 1.00012.
2. HORIZONTAL CONTROL IS BASED ON THE TEXAS STATE PLANE COORDINATE SYSTEM, NAD-83(2011), CENTRAL ZONE (4203).

STATE OF TEXAS — SCOTT R. ARNOLD — 96782 — LICENSED — PROFESSIONAL ENGINEER

Scott R. Arnold, P.E.

12/21/2020

Kimley»Horn F-928

© 2021

Texas Department of Transportation

SURVEY CONTROL INDEX SHEET

SHEET 3 OF 3

FED. RD. DIV. NO.	PROJECT ID.		HIGHWAY NO.
6	(SEE TITLE SHEET)		US 84
STATE	DIST.	COUNTY	SHEET NO.
TEXAS	WAC	MCLENNAN	54
CONT.	SECT.	JOB	
0055	15	072	

FILENAME: pw:\\kh-pw.bentley.com:kh-pw-01\Documents\01 Active Projects\TX-FTW-063586010 - US 84 (Waco Drive)\WAC 005515072\4 - Design\Plan Set\3. Roadway\US84_RDW_SC03.dgn
PLOTTED: 12/21/2020

CONTROL LEFT ALIGNMENT (℄ CONTROL LT)

Beginning chain CTRLLT description

Point CTRLLT10 N 10,532,710.7400 E 3,280,274.5348 Sta 100+00.00

Course from CTRLLT10 to CTRLLT20 N 42° 06′ 08.36" E Dist 846.0269

Point CTRLLT20 N 10,533,338.4485 E 3,280,841.7592 Sta 108+46.03

Ending chain CTRLLT description

CONTROL RIGHT ALIGNMENT (℄ CONTROL RT)

Beginning chain CTRLRT description

Point CTRLRT10 N 10,532,658.4444 E 3,280,332.4068 Sta 100+00.00

Course from CTRLRT10 to CTRLRT20 N 42° 06′ 08.36" E Dist 846.0269

Point CTRLRT20 N 10,533,286.1529 E 3,280,899.6312 Sta 108+46.03

Ending chain CTRLRT description

US84 ALIGNMENT (℄ US84)

Beginning chain US84 description
Feature: Geom_Centerline

Point US841 N 10,530,684.8034 E 3,278,657.8837 Sta 390+35.52

Course from US841 to PC US84_3 N 28° 53′ 34.12" E Dist 85.7952

Curve Data				
Curve US84_3				
P.I. Station	395+46.27	N 10,531,131.9732	E	3,278,904.6615
Delta =	13° 06′ 12.83" (RT)			
Degree =	1° 32′ 54.72"			
Tangent =	424.9494			
Length =	846.1912			
Radius =	3,700.0000			
External =	24.3230			
Long Chord =	844.3483			
Mid. Ord. =	24.1642			
P.C. Station	391+21.32	N 10,530,759.9192	E	3,278,699.3376
P.T. Station	399+67.51	N 10,531,447.7901	E	3,279,188.9882
C.C.		N 10,528,972.1808	E	3,281,938.7806
Back = N	28° 53′ 34.12" E			
Ahead = N	41° 59′ 46.95" E			
Chord Bear = N	35° 26′ 40.54" E			

Equation: Sta 399+67.51 (BK) = Sta 42+57.30 (AH) — End Region 1 / Begin Region 2

Point STAEQU1 N 10,531,447.7901 E 3,279,188.9882 Sta 42+57.30

Course from STAEQU1 to US846 N 41° 59′ 46.95" E Dist 3,829.2453

Point US846 N 10,534,293.6360 E 3,281,751.0734 Sta 80+86.55

Course from US846 to US848 N 41° 29′ 46.95" E Dist 1,350.0104

Point US848 N 10,535,304.7906 E 3,282,645.5533 Sta 94+36.56

Course from US848 to PC US84_10 N 42° 56′ 40.93" E Dist 816.6110

US84 ALIGNMENT (℄ US84)

Curve Data				
Curve US84_10				
P.I. Station	103+57.67	N 10,535,979.0590	E	3,283,273.1032
Delta =	8° 20′ 44.53" (LT)			
Degree =	4° 00′ 00.00"			
Tangent =	104.5061			
Length =	208.6426			
Radius =	1,432.3945			
External =	3.8073			
Long Chord =	208.4582			
Mid. Ord. =	3.7972			
P.C. Station	102+53.17	N 10,535,902.5593	E	3,283,201.9040
P.T. Station	104+61.81	N 10,536,065.0828	E	3,283,332.4449
C.C.		N 10,536,878.4385	E	3,282,153.3747
Back = N	42° 56′ 40.93" E			
Ahead = N	34° 35′ 56.40" E			
Chord Bear = N	38° 46′ 18.66" E			

Course from PT US84_10 to PC US84_13 N 34° 35′ 56.40" E Dist 61.2705

Curve Data				
Curve US84_13				
P.I. Station	106+35.97	N 10,536,208.4429	E	3,283,431.3387
Delta =	9° 08′ 59.04" (RT)			
Degree =	4° 03′ 40.00"			
Tangent =	112.8906			
Length =	225.3013			
Radius =	1,410.8400			
External =	4.5094			
Long Chord =	225.0619			
Mid. Ord. =	4.4950			
P.C. Station	105+23.08	N 10,536,115.5174	E	3,283,367.2361
P.T. Station	107+48.38	N 10,536,289.9928	E	3,283,509.4022
C.C.		N 10,535,314.4010	E	3,284,528.5638
Back = N	34° 35′ 56.40" E			
Ahead = N	43° 44′ 55.44" E			
Chord Bear = N	39° 10′ 25.92" E			

Course from PT US84_13 to PC US84_16 N 43° 44′ 55.44" E Dist 534.6477

Curve Data				
Curve US84_16				
P.I. Station	113+81.00	N 10,536,746.9865	E	3,283,946.8592
Delta =	5° 52′ 24.12" (RT)			
Degree =	3° 00′ 00.00"			
Tangent =	97.9753			
Length =	195.7789			
Radius =	1,909.8593			
External =	2.5114			
Long Chord =	195.6932			
Mid. Ord. =	2.5081			
P.C. Station	112+83.03	N 10,536,676.2112	E	3,283,879.1096
P.T. Station	114+78.81	N 10,536,810.4574	E	3,284,021.4956
C.C.		N 10,535,355.5490	E	3,285,258.7523
Back = N	43° 44′ 55.44" E			
Ahead = N	49° 37′ 19.56" E			
Chord Bear = N	46° 41′ 07.50" E			

Course from PT US84_16 to PC US84_19 N 49° 37′ 19.56" E Dist 112.3213

Curve Data				
Curve US84_19				
P.I. Station	116+94.83	N 10,536,950.4015	E	3,284,186.0579
Delta =	6° 12′ 57.18" (LT)			
Degree =	3° 00′ 00.00"			
Tangent =	103.6998			
Length =	207.1961			
Radius =	1,909.8593			
External =	2.8132			
Long Chord =	207.0945			
Mid. Ord. =	2.8091			
P.C. Station	115+91.13	N 10,536,883.2221	E	3,284,107.0606
P.T. Station	117+98.33	N 10,537,025.7394	E	3,284,257.3169
C.C.		N 10,538,338.1305	E	3,282,869.8039
Back = N	49° 37′ 19.56" E			
Ahead = N	43° 24′ 22.38" E			
Chord Bear = N	46° 30′ 50.97" E			

Course from PT US84_19 to US8422 N 43° 24′ 22.38" E Dist 1,119.7002

Point US8422 N 10,537,839.2017 E 3,285,026.7372 Sta 129+18.03

Course from US8422 to PC US84_24 N 42° 49′ 22.38" E Dist 466.9689

STATE OF TEXAS · KEITH L. RUTLEDGE · 129021 · LICENSED · PROFESSIONAL ENGINEER

12/21/2020

Kimley»Horn F-928

© 2021

Texas Department of Transportation

HORIZONTAL ALIGNMENT DATA

SCALE: NTS SHEET 1 OF 4

FED.RD. DIV.NO.	PROJECT ID.	HIGHWAY NO.
6	(SEE TITLE SHEET)	US 84

STATE	DIST.	COUNTY	SHEET NO.
TEXAS	WAC	MCLENNAN	55
CONT.	SECT.	JOB	
0055	15	072	

FILENAME: pw:\\kh-pw.bentley.com:kh-pw-01\Documents\01 Active Projects\TX-FTW-063586010 - US 84 (Waco Drive)\WAC 0055150721\4 - Design\Plan Set\3. Roadway\US84_ROW_HAD01.dgn
PLOTTED: 12/21/2020

US84 ALIGNMENT (℄ US84)

Curve Data

Curve US84 24
P.I. Station 134+94.72 N 10,538,262.1860 E 3,285,418.7389
Delta = 8° 45′ 40.49" (LT)
Degree = 4° 00′ 00.00"
Tangent = 109.7295
Length = 219.0312
Radius = 1,432.3945
External = 4.1968
Long Chord = 218.8179
Mid. Ord. = 4.1845
P.C. Station 133+84.99 N 10,538,181.7040 E 3,285,344.1520
P.T. Station 136+04.03 N 10,538,353.0898 E 3,285,480.1966
C.C. N 10,539,155.3517 E 3,284,293.5501
Back = N 42° 49′ 22.38" E
Ahead = N 34° 03′ 41.89" E
Chord Bear = N 38° 26′ 32.14" E

Course from PT US84 24 to PC US84 27 N 34° 03′ 41.89" E Dist 61.3569

Curve Data

Curve US84 27
P.I. Station 137+72.73 N 10,538,492.8541 E 3,285,574.6878
Delta = 8° 34′ 19.65" (RT)
Degree = 4° 00′ 00.00"
Tangent = 107.3519
Length = 214.3031
Radius = 1,432.3945
External = 4.0172
Long Chord = 214.1033
Mid. Ord. = 4.0059
P.C. Station 136+65.38 N 10,538,403.9200 E 3,285,514.5617
P.T. Station 138+79.69 N 10,538,571.8327 E 3,285,647.3983
C.C. N 10,537,601.6582 E 3,286,701.2082
Back = N 34° 03′ 41.89" E
Ahead = N 42° 38′ 01.54" E
Chord Bear = N 38° 20′ 51.72" E

Course from PT US84 27 to PC US84 30 N 42° 38′ 01.54" E Dist 52.1681

Curve Data

Curve US84 30
P.I. Station 141+36.96 N 10,538,761.1083 E 3,285,821.6520
Delta = 22° 48′ 09.76" (RT)
Degree = 5° 38′ 00.00"
Tangent = 205.1053
Length = 404.7818
Radius = 1,017.0848
External = 20.4747
Long Chord = 402.1157
Mid. Ord. = 20.0706
P.C. Station 139+31.85 N 10,538,610.2127 E 3,285,682.7322
P.T. Station 143+36.64 N 10,538,846.3709 E 3,286,008.1955
C.C. N 10,537,921.3314 E 3,286,430.9996
Back = N 42° 38′ 01.54" E
Ahead = N 65° 26′ 11.31" E
Chord Bear = N 54° 02′ 06.43" E

Course from PT US84 30 to PC US84 33 N 65° 26′ 11.31" E Dist 37.9641

Curve Data

Curve US84 33
P.I. Station 145+76.37 N 10,538,946.0295 E 3,286,226.2352
Delta = 23° 05′ 16.53" (LT)
Degree = 5° 48′ 00.00"
Tangent = 201.7715
Length = 398.0677
Radius = 987.8583
External = 20.3955
Long Chord = 395.3799
Mid. Ord. = 19.9829
P.C. Station 143+74.60 N 10,538,862.1527 E 3,286,042.7238
P.T. Station 147+72.67 N 10,539,095.1508 E 3,286,362.1564
C.C. N 10,539,760.6107 E 3,285,632.0693
Back = N 65° 26′ 11.31" E
Ahead = N 42° 20′ 54.78" E
Chord Bear = N 53° 53′ 33.04" E

Course from PT US84 33 to US8436 N 42° 20′ 54.78" E Dist 849.3906

Point US8436 N 10,539,722.9019 E 3,286,934.3390 Sta 156+22.06

Course from US8436 to PC US84 38 N 42° 31′ 54.78" E Dist 290.6441

US84 ALIGNMENT (℄ US84)

Curve Data

Curve US84 38
P.I. Station 159+87.72 N 10,539,992.3572 E 3,287,181.5253
Delta = 2° 53′ 00.00" (RT)
Degree = 1° 55′ 20.00"
Tangent = 75.0158
Length = 150.0000
Radius = 2,980.7053
External = 0.9438
Long Chord = 149.9842
Mid. Ord. = 0.9435
P.C. Station 159+12.70 N 10,539,937.0779 E 3,287,130.8145
P.T. Station 160+62.70 N 10,540,045.0156 E 3,287,234.9525
C.C. N 10,537,922.1200 E 3,289,327.3001
Back = N 42° 31′ 54.78" E
Ahead = N 45° 24′ 54.78" E
Chord Bear = N 43° 58′ 24.78" E

Course from PT US84 38 to PC US84 41 N 45° 24′ 54.78" E Dist 43.0722

Curve Data

Curve US84 41
P.I. Station 161+80.74 N 10,540,127.8708 E 3,287,319.0173
Delta = 2° 52′ 00.00" (LT)
Degree = 1° 54′ 45.00"
Tangent = 74.9612
Length = 149.8911
Radius = 2,995.8578
External = 0.9377
Long Chord = 149.8754
Mid. Ord. = 0.9374
P.C. Station 161+05.77 N 10,540,075.2507 E 3,287,265.6290
P.T. Station 162+55.66 N 10,540,183.0950 E 3,287,369.7072
C.C. N 10,542,208.9381 E 3,285,162.6449
Back = N 45° 24′ 54.78" E
Ahead = N 42° 32′ 54.78" E
Chord Bear = N 43° 58′ 54.78" E

Course from PT US84 41 to PC US84 44 N 42° 32′ 54.78" E Dist 580.8731

Curve Data

Curve US84 44
P.I. Station 169+13.64 N 10,540,667.8270 E 3,287,814.6384
Delta = 5° 05′ 25.47" (RT)
Degree = 3° 18′ 12.00"
Tangent = 77.1003
Length = 154.0992
Radius = 1,734.4837
External = 1.7128
Long Chord = 154.0485
Mid. Ord. = 1.7111
P.C. Station 168+36.54 N 10,540,611.0269 E 3,287,762.5021
P.T. Station 169+90.64 N 10,540,719.7772 E 3,287,871.6089
C.C. N 10,539,438.1435 E 3,289,040.3042
Back = N 42° 32′ 54.78" E
Ahead = N 47° 38′ 20.25" E
Chord Bear = N 45° 05′ 37.52" E

Course from PT US84 44 to PC US84 47 N 47° 38′ 20.25" E Dist 111.3432

Curve Data

Curve US84 47
P.I. Station 171+79.24 N 10,540,846.8576 E 3,288,010.9698
Delta = 5° 19′ 55.87" (LT)
Degree = 3° 27′ 12.00"
Tangent = 77.2592
Length = 154.4070
Radius = 1,659.1442
External = 1.7978
Long Chord = 154.3512
Mid. Ord. = 1.7959
P.C. Station 171+01.98 N 10,540,794.8003 E 3,287,953.8819
P.T. Station 172+56.39 N 10,540,903.9948 E 3,288,062.9730
C.C. N 10,542,020.7646 E 3,286,835.9504
Back = N 47° 38′ 20.25" E
Ahead = N 42° 18′ 24.38" E
Chord Bear = N 44° 58′ 22.32" E

Course from PT US84 47 to PC US84 50 N 42° 18′ 24.38" E Dist 802.2439

STATE OF TEXAS
JOSHUA L. RUTHERFORD
103601
LICENSED
PROFESSIONAL ENGINEER

12/21/2020

Kimley»Horn F-928

© 2021

Texas Department of Transportation

HORIZONTAL ALIGNMENT DATA

SCALE: NTS SHEET 2 OF 4

FED. RD. DIV. NO.	PROJECT ID.	HIGHWAY NO.
6	(SEE TITLE SHEET)	US 84

STATE	DIST.	COUNTY	SHEET NO.
TEXAS	WAC	MCLENNAN	56
CONT.	SECT.	JOB	
0055	15	072	

FILENAME: pw:\\kh-pw.bentley.com:kh-pw-01\Documents\01 Active Projects\TX-FTW-063586010 - US 84 (Waco Drive)\WAC 0055150721\4 - Design\Plan Set\3. Roadway\US84_ROW_HAD02.dgn
PLOTTED: 12/21/2020

US84 ALIGNMENT (℄ US84)

Curve Data

Curve US84 50						
P.I. Station	182+66.98	N	10,541,651.3815	E	3,288,743.2042	
Delta =	27° 25′ 05.59"	(LT)				
Degree =	6° 42′ 30.00"					
Tangent =	208.3507					
Length =	408.7188					
Radius =	854.0986					
External =	25.0455					
Long Chord =	404.8301					
Mid. Ord. =	24.3320					
P.C. Station	180+58.63	N	10,541,497.2955	E	3,288,602.9633	
P.T. Station	184+67.35	N	10,541,852.7373	E	3,288,796.7377	
C.C.		N	10,542,072.1892	E	3,287,971.3134	
Back = N	42° 18′ 24.38" E					
Ahead = N	14° 53′ 18.79" E					
Chord Bear = N	28° 35′ 51.59" E					

Course from PT US84 50 to PC US84 53 N 14° 53′ 18.79" E Dist 92.5696

Curve Data

Curve US84 53						
P.I. Station	187+71.31	N	10,542,146.4962	E	3,288,874.8381	
Delta =	27° 48′ 11.86"	(RT)				
Degree =	6° 42′ 30.00"					
Tangent =	211.3941					
Length =	414.4591					
Radius =	854.0986					
External =	25.7718					
Long Chord =	410.4045					
Mid. Ord. =	25.0169					
P.C. Station	185+59.92	N	10,541,942.1991	E	3,288,820.5225	
P.T. Station	189+74.38	N	10,542,301.8732	E	3,289,018.1749	
C.C.		N	10,541,722.7473	E	3,289,645.9468	
Back = N	14° 53′ 18.79" E					
Ahead = N	42° 41′ 30.65" E					
Chord Bear = N	28° 47′ 24.72" E					

Course from PT US84 53 to PC US84 56 N 42° 41′ 30.65" E Dist 566.5254

Curve Data

Curve US84 56						
P.I. Station	196+18.70	N	10,542,775.4559	E	3,289,455.0597	
Delta =	2° 10′ 25.50"	(LT)				
Degree =	1° 23′ 50.16"					
Tangent =	77.7951					
Length =	155.5716					
Radius =	4,100.5600					
External =	0.7379					
Long Chord =	155.5622					
Mid. Ord. =	0.7378					
P.C. Station	195+40.90	N	10,542,718.2756	E	3,289,402.3103	
P.T. Station	196+96.48	N	10,542,834.5958	E	3,289,505.6023	
C.C.		N	10,545,498.6813	E	3,286,388.3533	
Back = N	42° 41′ 30.65" E					
Ahead = N	40° 31′ 05.15" E					
Chord Bear = N	41° 36′ 17.90" E					

Curve Data

Curve US84 57						
P.I. Station	197+68.73	N	10,542,889.5215	E	3,289,552.5433	
Delta =	2° 01′ 07.97"	(RT)				
Degree =	1° 23′ 50.16"					
Tangent =	72.2513					
Length =	144.4877					
Radius =	4,100.5600					
External =	0.6365					
Long Chord =	144.4802					
Mid. Ord. =	0.6364					
P.C. Station	196+96.48	N	10,542,834.5960	E	3,289,505.6025	
P.T. Station	198+40.96	N	10,542,942.7593	E	3,289,601.3900	
C.C.		N	10,540,170.5106	E	3,292,622.8514	
Back = N	40° 31′ 05.15" E					
Ahead = N	42° 32′ 13.12" E					
Chord Bear = N	41° 31′ 39.13" E					

Course from PT US84 57 to PC US84 60 N 42° 32′ 13.12" E Dist 817.9619

US84 ALIGNMENT (℄ US84)

Curve Data

Curve US84 60						
P.I. Station	210+57.10	N	10,543,838.8617	E	3,290,423.5811	
Delta =	34° 15′ 09.13"	(LT)				
Degree =	4° 26′ 02.40"					
Tangent =	398.1787					
Length =	772.4974					
Radius =	1,292.1917					
External =	59.9568					
Long Chord =	761.0453					
Mid. Ord. =	57.2982					
P.C. Station	206+58.93	N	10,543,545.4673	E	3,290,154.3861	
P.T. Station	214+31.42	N	10,544,232.8853	E	3,290,480.9536	
C.C.		N	10,544,419.0740	E	3,289,202.2460	
Back = N	42° 32′ 13.12" E					
Ahead = N	8° 17′ 03.99" E					
Chord Bear = N	25° 24′ 38.55" E					

Course from PT US84 60 to PC US84 63 N 8° 17′ 03.99" E Dist 244.5391

Curve Data

Curve US84 63						
P.I. Station	220+74.20	N	10,544,868.9562	E	3,290,573.5699	
Delta =	33° 47′ 43.34"	(RT)				
Degree =	4° 22′ 14.00"					
Tangent =	398.2391					
Length =	773.2512					
Radius =	1,310.9496					
External =	59.1538					
Long Chord =	762.0906					
Mid. Ord. =	56.5998					
P.C. Station	216+75.96	N	10,544,474.8727	E	3,290,516.1887	
P.T. Station	224+49.21	N	10,545,164.5340	E	3,290,840.4559	
C.C.		N	10,544,285.9813	E	3,291,813.4584	
Back = N	8° 17′ 03.99" E					
Ahead = N	42° 04′ 47.33" E					
Chord Bear = N	25° 10′ 55.66" E					

Course from PT US84 63 to PC US84 66 N 42° 04′ 47.33" E Dist 1,047.3310

Curve Data

Curve US84 66						
P.I. Station	237+82.24	N	10,546,153.9252	E	3,291,733.8065	
Delta =	17° 00′ 56.83"	(LT)				
Degree =	3° 00′ 00.00"					
Tangent =	285.6994					
Length =	567.1929					
Radius =	1,909.8593					
External =	21.2509					
Long Chord =	565.1108					
Mid. Ord. =	21.0171					
P.C. Station	234+96.54	N	10,545,941.8757	E	3,291,542.3407	
P.T. Station	240+63.74	N	10,546,412.7217	E	3,291,854.8375	
C.C.		N	10,547,221.7969	E	3,290,124.8203	
Back = N	42° 04′ 47.33" E					
Ahead = N	25° 03′ 50.50" E					
Chord Bear = N	33° 34′ 18.92" E					

Course from PT US84 66 to PC US84 69 N 25° 03′ 50.50" E Dist 512.0008

Curve Data

Curve US84 69						
P.I. Station	248+60.17	N	10,547,134.1567	E	3,292,192.2302	
Delta =	13° 35′ 18.94"	(RT)				
Degree =	2° 24′ 00.00"					
Tangent =	284.4302					
Length =	566.1914					
Radius =	2,387.3241					
External =	16.8841					
Long Chord =	564.8654					
Mid. Ord. =	16.7655					
P.C. Station	245+75.74	N	10,546,876.5099	E	3,292,071.7369	
P.T. Station	251+41.93	N	10,547,356.2816	E	3,292,369.8845	
C.C.		N	10,545,865.1659	E	3,294,234.2585	
Back = N	25° 03′ 50.50" E					
Ahead = N	38° 39′ 09.44" E					
Chord Bear = N	31° 51′ 29.97" E					

Course from PT US84 69 to US8472 N 38° 39′ 09.44" E Dist 683.3556

Point US8472 N 10,547,889.9462 E 3,292,796.7065 Sta 258+25.29

Course from US8472 to PC US84 74 N 37° 54′ 45.86" E Dist 2,154.1700

STATE OF TEXAS · J. RUTH · 126611 · LICENSED · PROFESSIONAL ENGINEER

12/21/2020

Kimley»Horn F-928

© 2021

Texas Department of Transportation

HORIZONTAL ALIGNMENT DATA

SCALE: NTS SHEET 3 OF 4

FED.RD. DIV.NO.	PROJECT ID.	HIGHWAY NO.
6	(SEE TITLE SHEET)	US 84

STATE	DIST.	COUNTY	SHEET NO.
TEXAS	WAC	MCLENNAN	57
CONT.	SECT.	JOB	
0055	15	072	

FILENAME: pw:\\kh-pw.bentley.com:kh-pw-01\Documents\01 Active Projects\TX-FTW-063586010 - US 84 (Waco Drive)\WAC 0055150724 - Design\Plan Set\3. Roadway\US84_ROW_HAD03.dgn
PLOTTED: 12/21/2020

US84 ALIGNMENT (℄ US84)

```
                                        Curve Data
                                       *----------*
Curve US84 74
P.I.  Station              281+36.60  N      10,549,713.4543  E       3,294,216.9200
Delta          =       2° 52′ 49.55" (LT)
Degree         =       0° 55′ 00.00"
Tangent        =             157.1475
Length         =             314.2288
Radius         =           6,250.4487
External       =               1.9752
Long Chord     =             314.1957
Mid. Ord.      =               1.9745
P.C.  Station              279+79.46  N      10,549,589.4732  E       3,294,120.3591
P.T.  Station              282+93.68  N      10,549,842.1312  E       3,294,307.1287
C.C.                                  N      10,553,430.1278  E       3,289,189.0832
Back         = N  37° 54′ 45.86" E
Ahead        = N  35° 01′ 56.31" E
Chord Bear   = N  36° 28′ 21.08" E

Course from PT US84 74 to PC US84 77 N 35° 01′ 56.31" E Dist 4,173.2484

                                        Curve Data
                                       *----------*
Curve US84 77
P.I.  Station              330+74.56  N      10,553,756.8452  E       3,297,051.5319
Delta          =      23° 57′ 00.00" (RT)
Degree         =       2° 00′ 00.00"
Tangent        =             607.6233
Length         =           1,197.5000
Radius         =           2,864.7890
External       =              63.7298
Long Chord     =           1,188.8008
Mid. Ord.      =              62.3429
P.C.  Station              324+66.93  N      10,553,259.3059  E       3,296,702.7328
P.T.  Station              336+64.43  N      10,554,069.9551  E       3,297,572.2701
C.C.                                  N      10,551,614.8074  E       3,299,048.5037
Back         = N  35° 01′ 56.31" E
Ahead        = N  58° 58′ 56.31" E
Chord Bear   = N  47° 00′ 26.31" E

Course from PT US84 77 to US8479 N 58° 58′ 56.31" E Dist 245.6765

Point US8479          N  10,554,196.5529 E    3,297,782.8168 Sta     339+10.11

================================================================================
Ending chain US84 description
```

12/21/2020

Kimley»Horn F-928

© 2021

Texas Department of Transportation

HORIZONTAL ALIGNMENT DATA

SCALE: NTS SHEET 4 OF 4

FED. RD. DIV. NO.	PROJECT ID.	HIGHWAY NO.
6	(SEE TITLE SHEET)	US 84

STATE	DIST.	COUNTY	SHEET NO.
TEXAS	WAC	MCLENNAN	58
CONT.	SECT.	JOB	
0055	15	072	

FILENAME: pw:\\kh-pw.bentley.com:kh-pw-01\Documents\01 Active Projects\TX-FTW-063586010 - US 84 (Waco Dr ive)\WAC 0055150 72\4 - Design\Plan Set\3. Roadway\US84_RDW_HAD04.dgn
PLOTTED: 12/21/2020

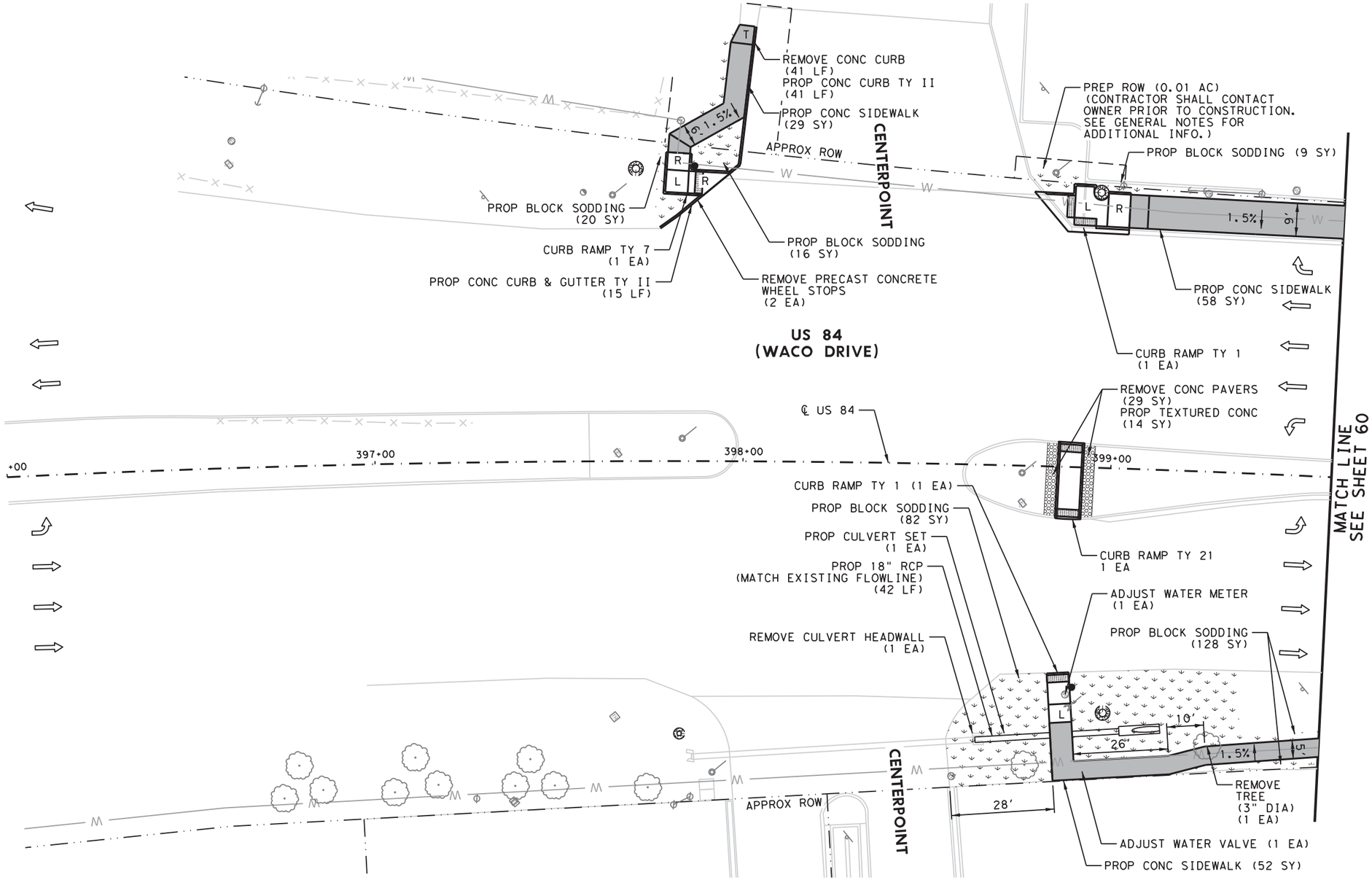

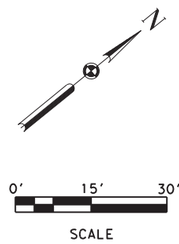

NOTES:

* FOR CONTRACTOR INFORMATION ONLY

1. LINEAR DIMENSIONS ARE TO THE BACK OF CURB.
2. RADII CALLOUTS ARE TO NOMINAL FACE OF CURB UNLESS NOTED OTHERWISE.
3. SIDEWALK CROSS SLOPE IS 1.5% USUAL. MAXIMUM ALLOWABLE CROSS SLOPE ON SIDEWALK IS 2.0%.
4. CONTRACTOR SHALL VERIFY ELEVATIONS AND DIMENSIONS IN THE FIELD PRIOR TO CONSTRUCTION.
5. THE INFORMATION SHOWN IN THESE PLANS CONCERNING TYPE AND LOCATION OF UTILITIES IS NOT GUARANTEED TO BE ACCURATE OR ALL INCLUSIVE. IT SHALL BE THE CONTRACTOR'S RESPONSIBILITY TO VERIFY AND LOCATE ALL EXISTING UTILITIES PRIOR TO CONSTRUCTION. THE CONTRACTOR WILL BE SOLELY RESPONSIBLE FOR ANY DAMAGES BY THEIR CONSTRUCTION OPERATIONS TO EXISTING UTILITIES.
6. REFER TO DRIVEWAY DETAILS, MISCELLANEOUS DETAILS, SIGNAL SHEETS, PAVEMENT MARKING SHEETS, SUMMARY OF SMALL SIGNS, AND TXDOT PED STANDARDS FOR ADDITIONAL INFORMATION.
7. PROPOSED SIGN LOCATIONS MAY BE ADJUSTED AS APPROVED BY THE ENGINEER.

03/01/2021

Kimley»Horn F-928

© 2021

Texas Department of Transportation

SPECIAL NOTES & DETAILS

LEGEND

APPROX ROW	L1	LANDING COMMON	R	RAMP	
ELECTRIC BOX/VAULT	LS	LEVEL SIDEWALK (2% MAX)		RIPRAP (CONC)	
ES EXIST SIDEWALK	SL	LONGITUDINAL SLOPES MAY NOT EXCEED 5% & CROSS SLOPES MAY NOT EXCEED 2%		SAWCUT LINE	
ER EXISTING RAMP				SIDEWALK WALL	
FENCE	RAD	RADIUS		SIGN (EXISTING)	
FIRE HYDRANT	Ⓢ	MANHOLE	XX-X	SIGN NUMBER	
F FLARE		PED SIGNAL POLE (EXIST)		TRAFFIC FLOW	
Ⓖ GAS METER	●	PED SIGNAL POLE (PROP)		TRAF SIGNAL POLE (EXIST)	
GUY ANCHOR		POWER/ILLUMINATION POLE		TRAF SIGNAL POLE (PROP)	
HANDRAIL		PROPOSED ASPHALT PAVING	T	TRANSITION	
L LANDING		PROPOSED CONCRETE PAVING		TREE/BUSHES	
PROPOSED SMALL SIGN		PROPOSED SIDEWALK	Ⓦ	WATER METER	

SIDEWALK LAYOUT

AT CENTERPOINT

SHEET 1 OF 74

FED.RD. DIV.NO.	PROJECT ID.	HIGHWAY NO.
6	(SEE TITLE SHEET)	US 84

STATE	DIST.	COUNTY	SHEET NO.
TEXAS	WAC	MCLENNAN	59
CONT.	SECT.	JOB	
0055	15	072	

FILENAME: pw:\\kh-pw.bentley.com:kh-pw-01\Documents\01 Active Projects\TX-FTW-063586010 - US 84 (Waco Drive)\WAC 0055150724 - Design\Plan Set\3. Roadway\US84_RDW_SP01.dgn
PLOTTED: 12/21/2020

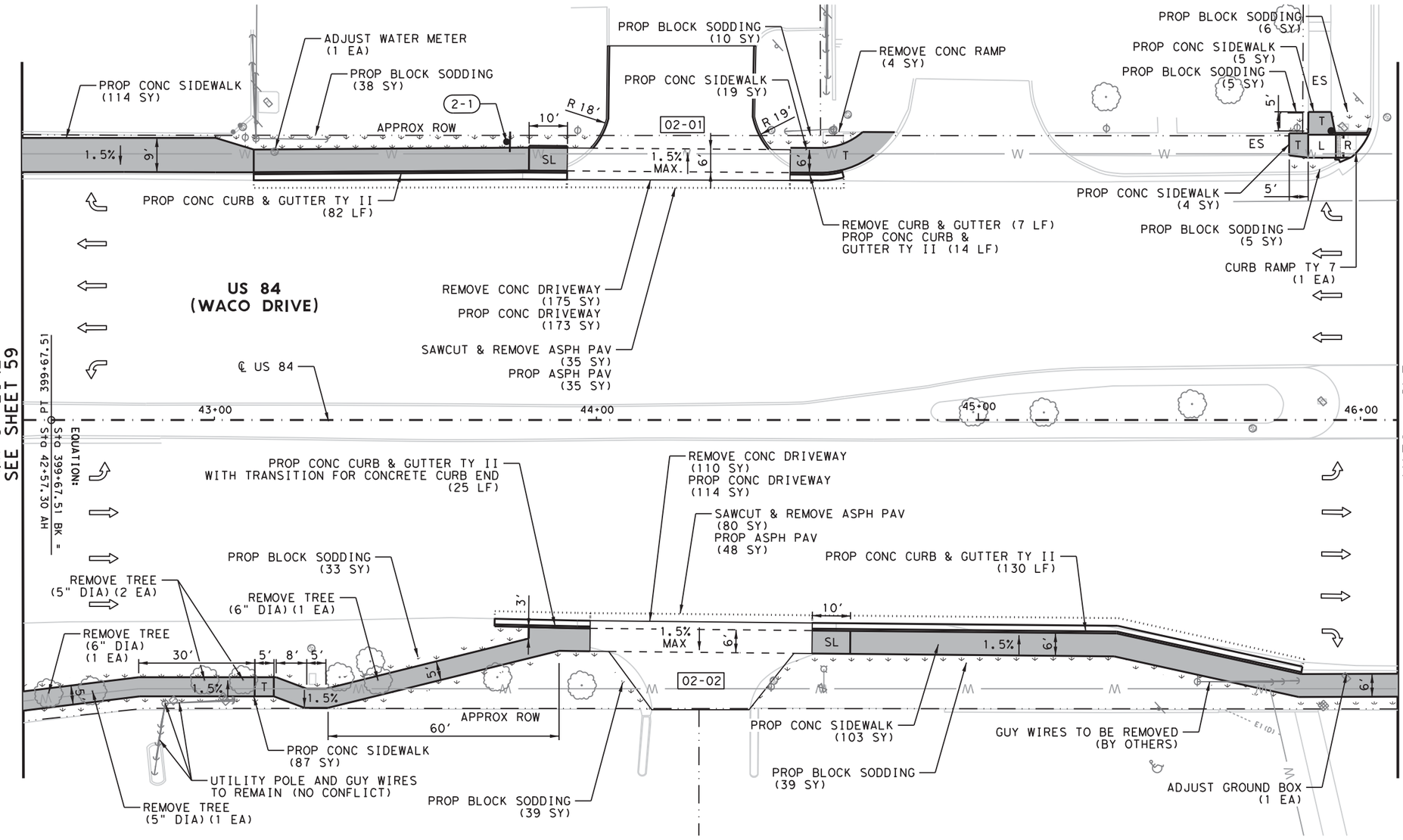

FILENAME: pw:\\kh-pw.bentley.com:kh-pw-01\Documents\01 Active Projects\TX-FTW-063586010 - US 84 (Waco Drive)\WAC 0055150724 - Design\Plan Set\3. Roadway\US84_RDW_SP02.dgn
PLOTTED: 12/21/2020

0' 15' 30'
SCALE

NOTES:

* FOR CONTRACTOR INFORMATION ONLY

1. LINEAR DIMENSIONS ARE TO THE BACK OF CURB.
2. RADII CALLOUTS ARE TO NOMINAL FACE OF CURB UNLESS NOTED OTHERWISE.
3. SIDEWALK CROSS SLOPE IS 1.5% USUAL. MAXIMUM ALLOWABLE CROSS SLOPE ON SIDEWALK IS 2.0%.
4. CONTRACTOR SHALL VERIFY ELEVATIONS AND DIMENSIONS IN THE FIELD PRIOR TO CONSTRUCTION.
5. THE INFORMATION SHOWN IN THESE PLANS CONCERNING TYPE AND LOCATION OF UTILITIES IS NOT GUARANTEED TO BE ACCURATE OR ALL INCLUSIVE. IT SHALL BE THE CONTRACTOR'S RESPONSIBILITY TO VERIFY AND LOCATE ALL EXISTING UTILITIES PRIOR TO CONSTRUCTION. THE CONTRACTOR WILL BE SOLELY RESPONSIBLE FOR ANY DAMAGES BY THEIR CONSTRUCTION OPERATIONS TO EXISTING UTILITIES.
6. REFER TO DRIVEWAY DETAILS, MISCELLANEOUS DETAILS, SIGNAL SHEETS, PAVEMENT MARKING SHEETS, SUMMARY OF SMALL SIGNS, AND TXDOT PED STANDARDS FOR ADDITIONAL INFORMATION.
7. PROPOSED SIGN LOCATIONS MAY BE ADJUSTED AS APPROVED BY THE ENGINEER.

03/01/2021

Kimley»Horn F-928

© 2021

Texas Department of Transportation

SPECIAL NOTES & DETAILS

LEGEND

APPROX ROW	L1	LANDING COMMON	R	RAMP
ELECTRIC BOX/VAULT	LS	LEVEL SIDEWALK (2% MAX)		RIPRAP (CONC)
ES EXIST SIDEWALK	SL	LONGITUDINAL SLOPES MAY NOT EXCEED 5% & CROSS SLOPES MAY NOT EXCEED 2%		SAWCUT LINE
ER EXISTING RAMP				SIDEWALK WALL
FENCE	RAD	RADIUS		SIGN (EXISTING)
FIRE HYDRANT	Ⓢ	MANHOLE	XX-X	SIGN NUMBER
F FLARE		PED SIGNAL POLE (EXIST)		TRAFFIC FLOW
Ⓖ GAS METER	●	PED SIGNAL POLE (PROP)		TRAF SIGNAL POLE (EXIST)
GUY ANCHOR		POWER/ILLUMINATION POLE		TRAF SIGNAL POLE (PROP)
HANDRAIL		PROPOSED ASPHALT PAVING	T	TRANSITION
L LANDING		PROPOSED CONCRETE PAVING		TREE/BUSHES
PROPOSED SMALL SIGN		PROPOSED SIDEWALK	Ⓦ	WATER METER

SIDEWALK LAYOUT

BETWEEN CENTERPOINT
AND LAKE AIR DRIVE

SHEET 2 OF 74

FED.RD. DIV.NO.	PROJECT ID.	HIGHWAY NO.
6	(SEE TITLE SHEET)	US 84

STATE	DIST.	COUNTY	SHEET NO.
TEXAS	WAC	MCLENNAN	60
CONT.	SECT.	JOB	
0055	15	072	

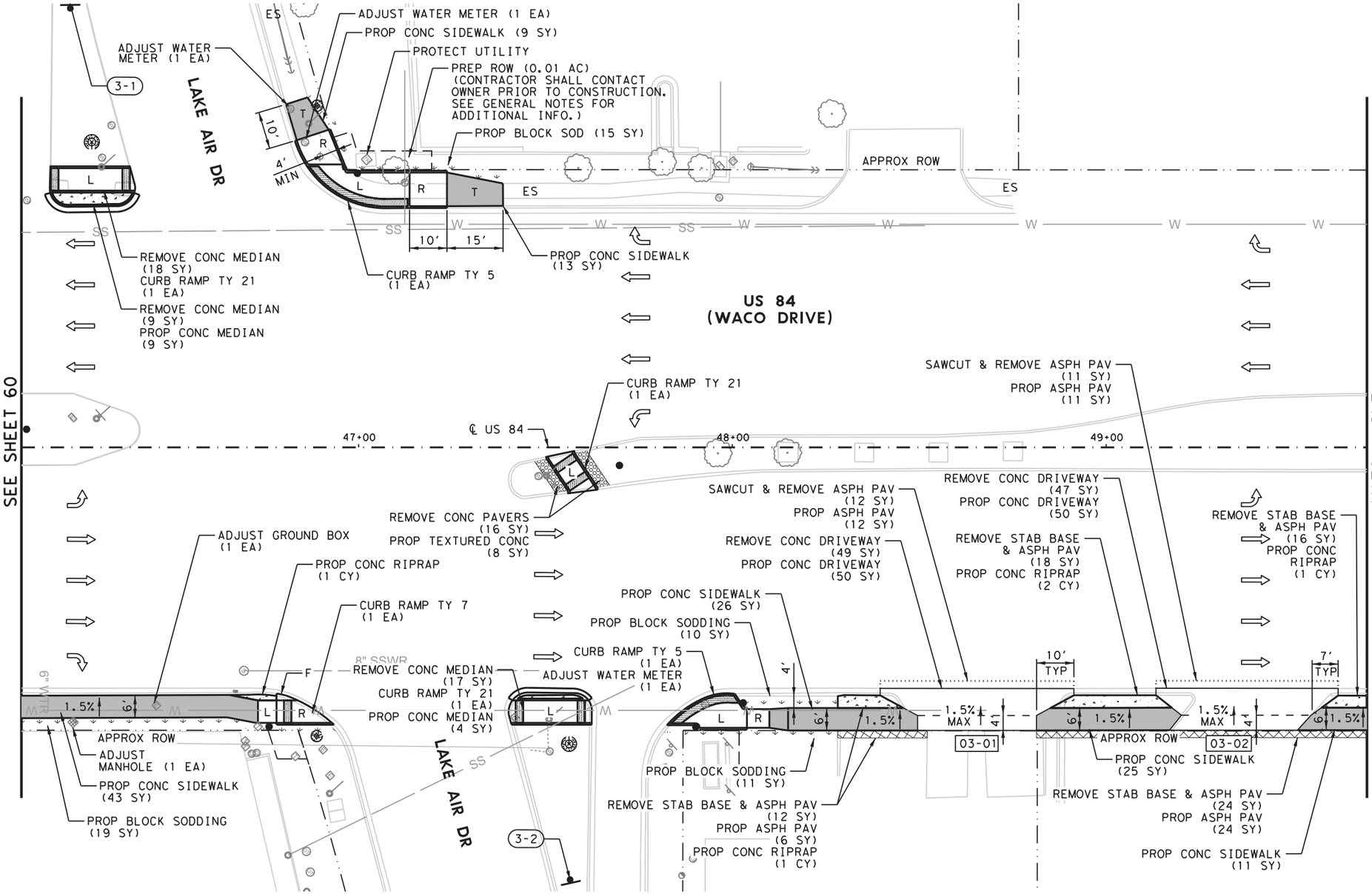

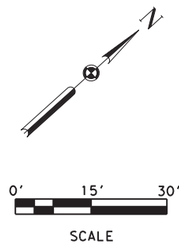

NOTES:

* FOR CONTRACTOR INFORMATION ONLY

1. LINEAR DIMENSIONS ARE TO THE BACK OF CURB.
2. RADII CALLOUTS ARE TO NOMINAL FACE OF CURB UNLESS NOTED OTHERWISE.
3. SIDEWALK CROSS SLOPE IS 1.5% USUAL. MAXIMUM ALLOWABLE CROSS SLOPE ON SIDEWALK IS 2.0%.
4. CONTRACTOR SHALL VERIFY ELEVATIONS AND DIMENSIONS IN THE FIELD PRIOR TO CONSTRUCTION.
5. THE INFORMATION SHOWN IN THESE PLANS CONCERNING TYPE AND LOCATION OF UTILITIES IS NOT GUARANTEED TO BE ACCURATE OR ALL INCLUSIVE. IT SHALL BE THE CONTRACTOR'S RESPONSIBILITY TO VERIFY AND LOCATE ALL EXISTING UTILITIES PRIOR TO CONSTRUCTION. THE CONTRACTOR WILL BE SOLELY RESPONSIBLE FOR ANY DAMAGES BY THEIR CONSTRUCTION OPERATIONS TO EXISTING UTILITIES.
6. REFER TO DRIVEWAY DETAILS, MISCELLANEOUS DETAILS, SIGNAL SHEETS, PAVEMENT MARKING SHEETS, SUMMARY OF SMALL SIGNS, AND TXDOT PED STANDARDS FOR ADDITIONAL INFORMATION.
7. PROPOSED SIGN LOCATIONS MAY BE ADJUSTED AS APPROVED BY THE ENGINEER.

STATE OF TEXAS
J. H. RUTH
79231
LICENSED
PROFESSIONAL ENGINEER

03/01/2021

Kimley»Horn F-928

© 2021

Texas Department of Transportation

SPECIAL NOTES & DETAILS

LEGEND

APPROX ROW	L1	LANDING COMMON	R	RAMP
ELECTRIC BOX/VAULT	LS	LEVEL SIDEWALK (2% MAX)		RIPRAP (CONC)
ES EXIST SIDEWALK	SL	LONGITUDINAL SLOPES MAY NOT EXCEED 5% & CROSS SLOPES MAY NOT EXCEED 2%		SAWCUT LINE
ER EXISTING RAMP				SIDEWALK WALL
FENCE	RAD	RADIUS		SIGN (EXISTING)
FIRE HYDRANT	Ⓢ	MANHOLE	XX-X	SIGN NUMBER
F FLARE		PED SIGNAL POLE (EXIST)		TRAFFIC FLOW
Ⓖ GAS METER	●	PED SIGNAL POLE (PROP)		TRAF SIGNAL POLE (EXIST)
GUY ANCHOR		POWER/ILLUMINATION POLE		TRAF SIGNAL POLE (PROP)
HANDRAIL		PROPOSED ASPHALT PAVING	T	TRANSITION
L LANDING		PROPOSED CONCRETE PAVING		TREE/BUSHES
PROPOSED SMALL SIGN		PROPOSED SIDEWALK	Ⓦ	WATER METER

SIDEWALK LAYOUT

AT LAKE AIR DRIVE

SHEET 3 OF 74

FED. RD. DIV. NO.	PROJECT ID.	HIGHWAY NO.
6	(SEE TITLE SHEET)	US 84

STATE	DIST.	COUNTY	SHEET NO.
TEXAS	WAC	MCLENNAN	61
CONT.	SECT.	JOB	
0055	15	072	

FILENAME: pw:\\kh-pw.bentley.com:kh-pw-01\Documents\01 Active Projects\TX-FTW-063586010 - US 84 (Waco Drive)\WAC 0055150724 - Design\Plan Set\3. Roadway\US84_RDW_SP03.dgn
PLOTTED: 12/21/2020

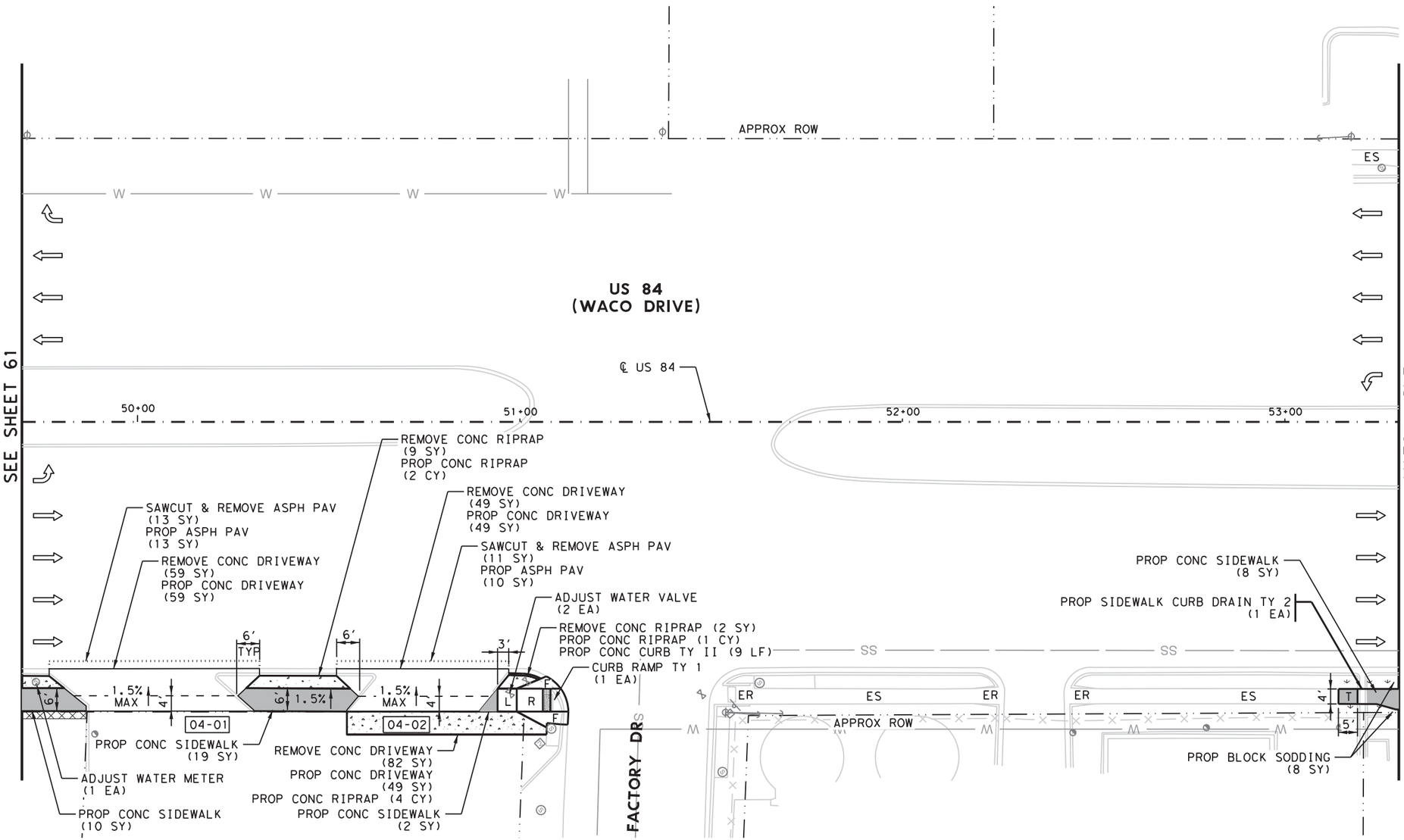

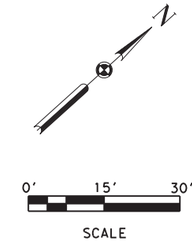

NOTES:

* FOR CONTRACTOR INFORMATION ONLY

1. LINEAR DIMENSIONS ARE TO THE BACK OF CURB.
2. RADII CALLOUTS ARE TO NOMINAL FACE OF CURB UNLESS NOTED OTHERWISE.
3. SIDEWALK CROSS SLOPE IS 1.5% USUAL. MAXIMUM ALLOWABLE CROSS SLOPE ON SIDEWALK IS 2.0%.
4. CONTRACTOR SHALL VERIFY ELEVATIONS AND DIMENSIONS IN THE FIELD PRIOR TO CONSTRUCTION.
5. THE INFORMATION SHOWN IN THESE PLANS CONCERNING TYPE AND LOCATION OF UTILITIES IS NOT GUARANTEED TO BE ACCURATE OR ALL INCLUSIVE. IT SHALL BE THE CONTRACTOR'S RESPONSIBILITY TO VERIFY AND LOCATE ALL EXISTING UTILITIES PRIOR TO CONSTRUCTION. THE CONTRACTOR WILL BE SOLELY RESPONSIBLE FOR ANY DAMAGES BY THEIR CONSTRUCTION OPERATIONS TO EXISTING UTILITIES.
6. REFER TO DRIVEWAY DETAILS, MISCELLANEOUS DETAILS, SIGNAL SHEETS, PAVEMENT MARKING SHEETS, SUMMARY OF SMALL SIGNS, AND TXDOT PED STANDARDS FOR ADDITIONAL INFORMATION.
7. PROPOSED SIGN LOCATIONS MAY BE ADJUSTED AS APPROVED BY THE ENGINEER.

STATE OF TEXAS
SETH T. RUTLEDGE
129231
LICENSED
PROFESSIONAL ENGINEER

03/01/2021

Kimley»Horn F-928

© 2021

Texas Department of Transportation

SPECIAL NOTES & DETAILS

LEGEND

— · ·	APPROX ROW	L1	LANDING COMMON	R	RAMP
	ELECTRIC BOX/VAULT	LS	LEVEL SIDEWALK (2% MAX)		RIPRAP (CONC)
ES	EXIST SIDEWALK	SL	LONGITUDINAL SLOPES MAY NOT EXCEED 5% & CROSS SLOPES MAY NOT EXCEED 2%		SAWCUT LINE
ER	EXISTING RAMP				SIDEWALK WALL
—×—	FENCE	RAD	RADIUS		SIGN (EXISTING)
	FIRE HYDRANT		MANHOLE	XX-X	SIGN NUMBER
F	FLARE		PED SIGNAL POLE (EXIST)		TRAFFIC FLOW
	GAS METER		PED SIGNAL POLE (PROP)		TRAF SIGNAL POLE (EXIST)
	GUY ANCHOR		POWER/ILLUMINATION POLE		TRAF SIGNAL POLE (PROP)
	HANDRAIL		PROPOSED ASPHALT PAVING	T	TRANSITION
L	LANDING		PROPOSED CONCRETE PAVING		TREE/BUSHES
	PROPOSED SMALL SIGN		PROPOSED SIDEWALK		WATER METER

SIDEWALK LAYOUT

AT FACTORY DR

SHEET 4 OF 74

FED. RD. DIV. NO.	PROJECT ID.	HIGHWAY NO.
6	(SEE TITLE SHEET)	US 84

STATE	DIST.	COUNTY	SHEET NO.
TEXAS	WAC	MCLENNAN	62
CONT.	SECT.	JOB	
0055	15	072	

FILENAME: pw:\\kh-pw.bentley.com:kh-pw-01\Documents\01 Active Projects\TX-FTW-063586010 - US 84 (Waco Drive)\WAC 005515072\4 - Design\Plan Set\3. Roadway\US84_RDW_SP04.dgn
PLOTTED: 12/21/2020

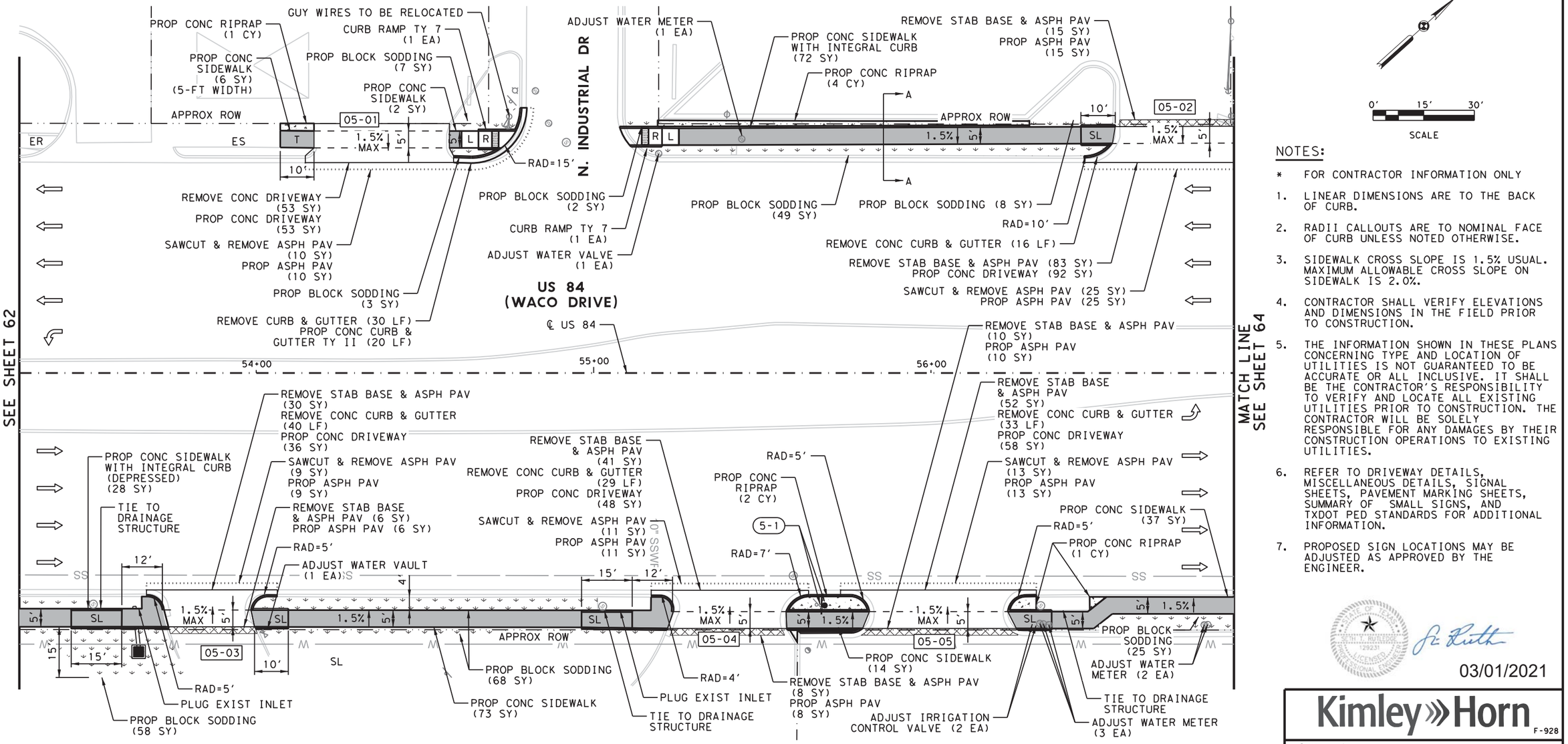

0' 15' 30'

SCALE

NOTES:

* FOR CONTRACTOR INFORMATION ONLY

1. LINEAR DIMENSIONS ARE TO THE BACK OF CURB.
2. RADII CALLOUTS ARE TO NOMINAL FACE OF CURB UNLESS NOTED OTHERWISE.
3. SIDEWALK CROSS SLOPE IS 1.5% USUAL. MAXIMUM ALLOWABLE CROSS SLOPE ON SIDEWALK IS 2.0%.
4. CONTRACTOR SHALL VERIFY ELEVATIONS AND DIMENSIONS IN THE FIELD PRIOR TO CONSTRUCTION.
5. THE INFORMATION SHOWN IN THESE PLANS CONCERNING TYPE AND LOCATION OF UTILITIES IS NOT GUARANTEED TO BE ACCURATE OR ALL INCLUSIVE. IT SHALL BE THE CONTRACTOR'S RESPONSIBILITY TO VERIFY AND LOCATE ALL EXISTING UTILITIES PRIOR TO CONSTRUCTION. THE CONTRACTOR WILL BE SOLELY RESPONSIBLE FOR ANY DAMAGES BY THEIR CONSTRUCTION OPERATIONS TO EXISTING UTILITIES.
6. REFER TO DRIVEWAY DETAILS, MISCELLANEOUS DETAILS, SIGNAL SHEETS, PAVEMENT MARKING SHEETS, SUMMARY OF SMALL SIGNS, AND TXDOT PED STANDARDS FOR ADDITIONAL INFORMATION.
7. PROPOSED SIGN LOCATIONS MAY BE ADJUSTED AS APPROVED BY THE ENGINEER.

STATE OF TEXAS
SETH T. RUTHER
129231
LICENSED
PROFESSIONAL ENGINEER

03/01/2021

Kimley»Horn F-928

© 2021

Texas Department of Transportation

SPECIAL NOTES & DETAILS

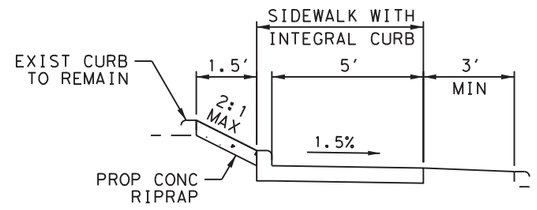

SECTION A-A

LEGEND

APPROX ROW	L1	LANDING COMMON	R	RAMP
ELECTRIC BOX/VAULT	LS	LEVEL SIDEWALK (2% MAX)		RIPRAP (CONC)
ES	EXIST SIDEWALK	SL	LONGITUDINAL SLOPES MAY NOT EXCEED 5% & CROSS SLOPES MAY NOT EXCEED 2%		SAWCUT LINE
ER	EXISTING RAMP				SIDEWALK WALL
FENCE	RAD	RADIUS		SIGN (EXISTING)
FIRE HYDRANT	Ⓢ	MANHOLE	XX-X	SIGN NUMBER
F	FLARE		PED SIGNAL POLE (EXIST)		TRAFFIC FLOW
Ⓖ	GAS METER		PED SIGNAL POLE (PROP)		TRAF SIGNAL POLE (EXIST)
GUY ANCHOR		POWER/ILLUMINATION POLE		TRAF SIGNAL POLE (PROP)
HANDRAIL		PROPOSED ASPHALT PAVING	T	TRANSITION
L	LANDING		PROPOSED CONCRETE PAVING		TREE/BUSHES
PROPOSED SMALL SIGN		PROPOSED SIDEWALK	Ⓦ	WATER METER

SIDEWALK LAYOUT

AT N INDUSTRIAL DR

SHEET 5 OF 74

FED.RD. DIV.NO.	PROJECT ID.	HIGHWAY NO.
6	(SEE TITLE SHEET)	US 84

STATE	DIST.	COUNTY	SHEET NO.
TEXAS	WAC	MCLENNAN	63
CONT.	SECT.	JOB	
0055	15	072	

FILENAME: pw:\\KH-pw.bentley.com:kh-pw-01\Documents\01 Active Projects\TX-FTW-063586010 - US 84 (Waco Drive)\WAC 0055150724 - Design\Plan Set\3. Roadway\US84_RDW_SP05.dgn
PLOTTED: 12/21/2020

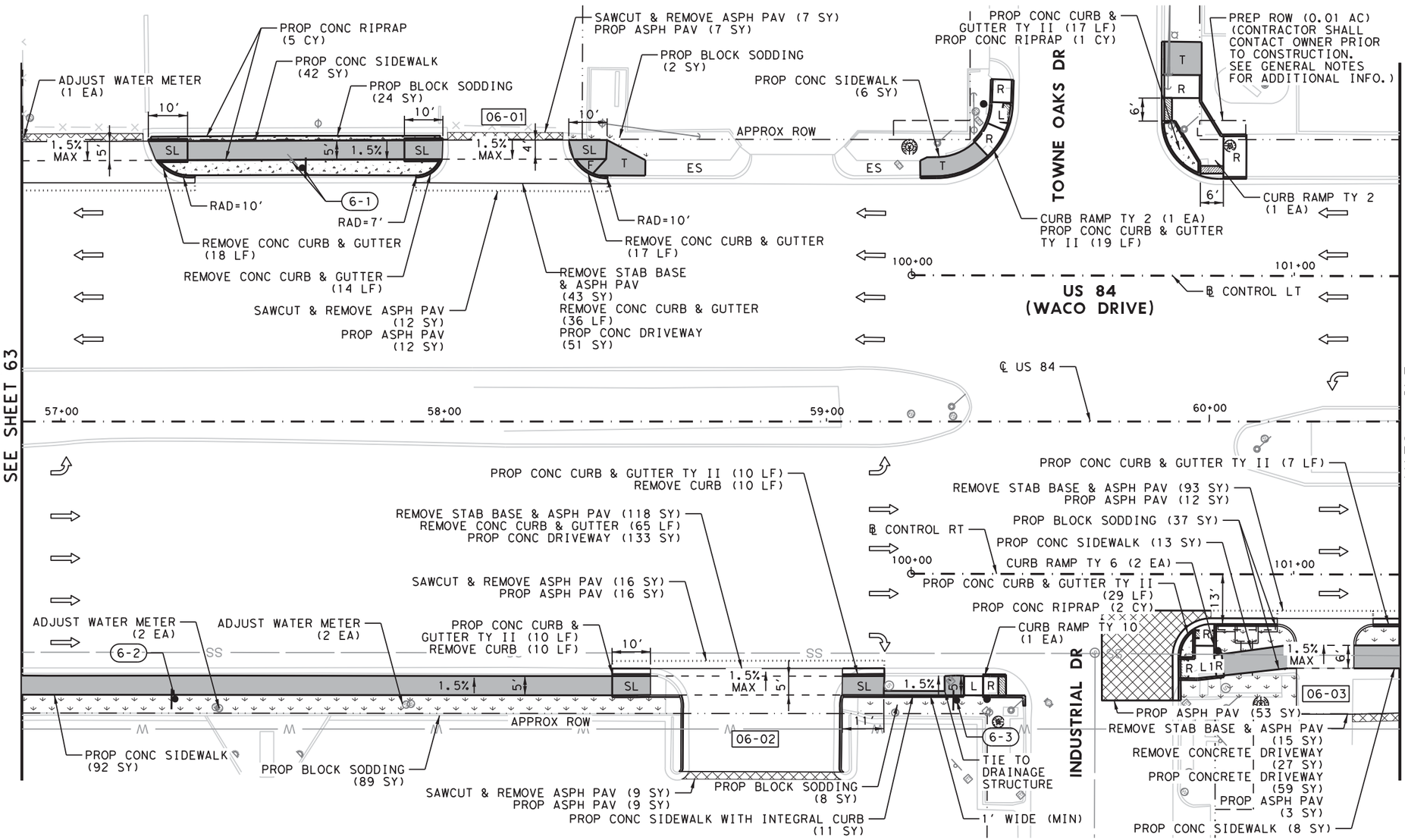

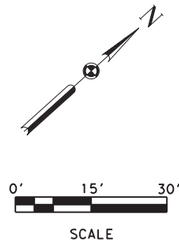

NOTES:

* FOR CONTRACTOR INFORMATION ONLY

1. LINEAR DIMENSIONS ARE TO THE BACK OF CURB.
2. RADII CALLOUTS ARE TO NOMINAL FACE OF CURB UNLESS NOTED OTHERWISE.
3. SIDEWALK CROSS SLOPE IS 1.5% USUAL. MAXIMUM ALLOWABLE CROSS SLOPE ON SIDEWALK IS 2.0%.
4. CONTRACTOR SHALL VERIFY ELEVATIONS AND DIMENSIONS IN THE FIELD PRIOR TO CONSTRUCTION.
5. THE INFORMATION SHOWN IN THESE PLANS CONCERNING TYPE AND LOCATION OF UTILITIES IS NOT GUARANTEED TO BE ACCURATE OR ALL INCLUSIVE. IT SHALL BE THE CONTRACTOR'S RESPONSIBILITY TO VERIFY AND LOCATE ALL EXISTING UTILITIES PRIOR TO CONSTRUCTION. THE CONTRACTOR WILL BE SOLELY RESPONSIBLE FOR ANY DAMAGES BY THEIR CONSTRUCTION OPERATIONS TO EXISTING UTILITIES.
6. REFER TO DRIVEWAY DETAILS, MISCELLANEOUS DETAILS, SIGNAL SHEETS, PAVEMENT MARKING SHEETS, SUMMARY OF SMALL SIGNS, AND TXDOT PED STANDARDS FOR ADDITIONAL INFORMATION.
7. PROPOSED SIGN LOCATIONS MAY BE ADJUSTED AS APPROVED BY THE ENGINEER.

03/01/2021

Kimley»Horn F-928

© 2021

Texas Department of Transportation

SPECIAL NOTES & DETAILS

LEGEND

APPROX ROW	L1	LANDING COMMON	R	RAMP
ELECTRIC BOX/VAULT	LS	LEVEL SIDEWALK (2% MAX)		RIPRAP (CONC)
ES EXIST SIDEWALK	SL	LONGITUDINAL SLOPES MAY NOT EXCEED 5% & CROSS SLOPES MAY NOT EXCEED 2%		SAWCUT LINE
ER EXISTING RAMP				SIDEWALK WALL
FENCE	RAD	RADIUS		SIGN (EXISTING)
FIRE HYDRANT	Ⓢ	MANHOLE	XX-X	SIGN NUMBER
F FLARE		PED SIGNAL POLE (EXIST)		TRAFFIC FLOW
Ⓖ GAS METER		PED SIGNAL POLE (PROP)		TRAF SIGNAL POLE (EXIST)
GUY ANCHOR		POWER/ILLUMINATION POLE		TRAF SIGNAL POLE (PROP)
HANDRAIL		PROPOSED ASPHALT PAVING	T	TRANSITION
L LANDING		PROPOSED CONCRETE PAVING		TREE/BUSHES
PROPOSED SMALL SIGN		PROPOSED SIDEWALK	Ⓦ	WATER METER

SIDEWALK LAYOUT

AT TOWNE OAKS DR

SHEET 6 OF 74

FED. RD. DIV. NO.	PROJECT ID.	HIGHWAY NO.
6	(SEE TITLE SHEET)	US 84

STATE	DIST.	COUNTY	SHEET NO.
TEXAS	WAC	MCLENNAN	64
CONT.	SECT.	JOB	
0055	15	072	

FILENAME: pw:\\kh-pw.bentley.com:kh-pw-01\Documents\01 Active Projects\TX-FTW-063586010 - US 84 (Waco Drive)\WAC 0055150724 - Design\Plan Set\3. Roadway\US84_RDW_SP06.dgn
PLOTTED: 12/21/2020

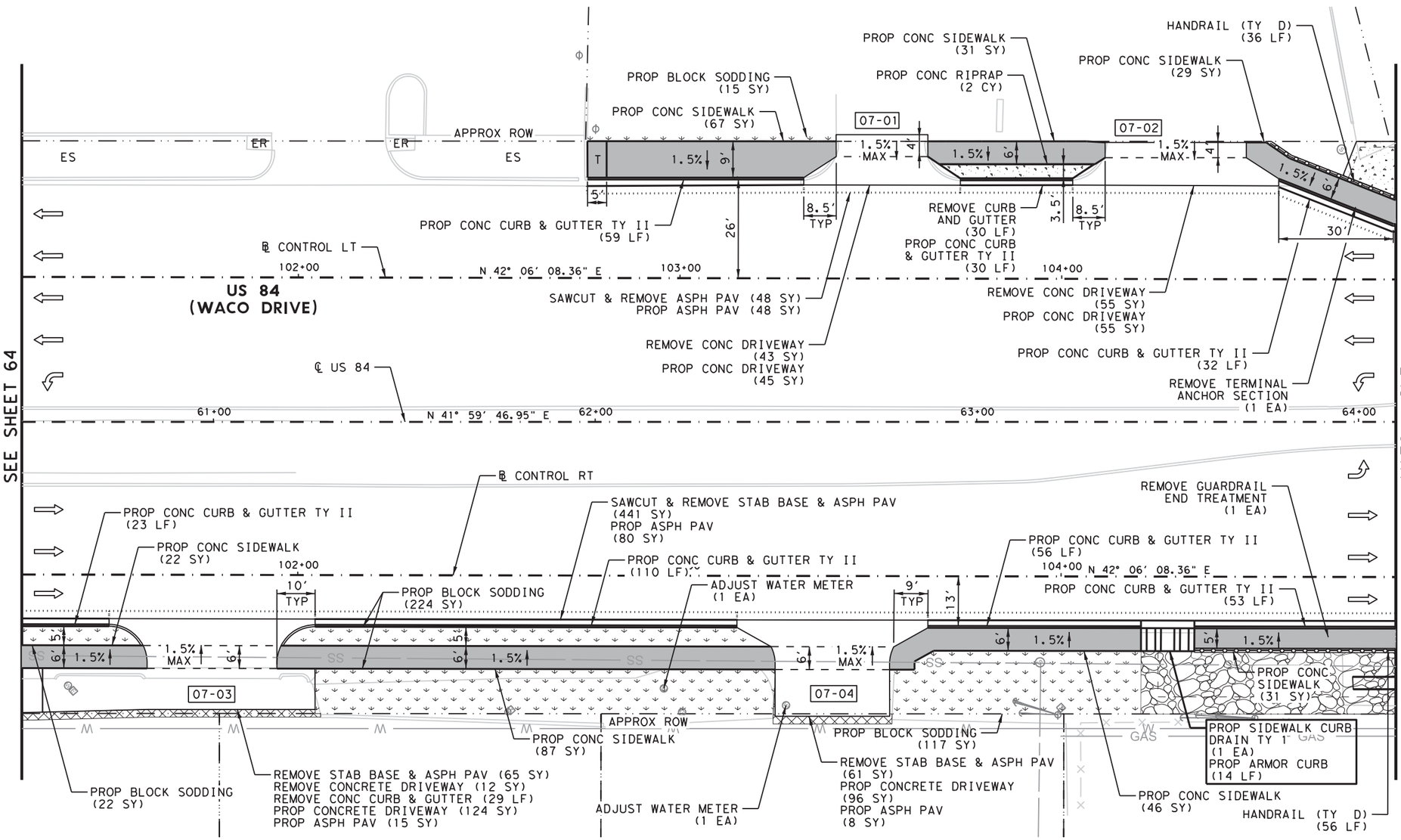

0' 15' 30'

SCALE

NOTES:

* FOR CONTRACTOR INFORMATION ONLY

1. LINEAR DIMENSIONS ARE TO THE BACK OF CURB.
2. RADII CALLOUTS ARE TO NOMINAL FACE OF CURB UNLESS NOTED OTHERWISE.
3. SIDEWALK CROSS SLOPE IS 1.5% USUAL. MAXIMUM ALLOWABLE CROSS SLOPE ON SIDEWALK IS 2.0%.
4. CONTRACTOR SHALL VERIFY ELEVATIONS AND DIMENSIONS IN THE FIELD PRIOR TO CONSTRUCTION.
5. THE INFORMATION SHOWN IN THESE PLANS CONCERNING TYPE AND LOCATION OF UTILITIES IS NOT GUARANTEED TO BE ACCURATE OR ALL INCLUSIVE. IT SHALL BE THE CONTRACTOR'S RESPONSIBILITY TO VERIFY AND LOCATE ALL EXISTING UTILITIES PRIOR TO CONSTRUCTION. THE CONTRACTOR WILL BE SOLELY RESPONSIBLE FOR ANY DAMAGES BY THEIR CONSTRUCTION OPERATIONS TO EXISTING UTILITIES.
6. REFER TO DRIVEWAY DETAILS, MISCELLANEOUS DETAILS, SIGNAL SHEETS, PAVEMENT MARKING SHEETS, SUMMARY OF SMALL SIGNS, AND TXDOT PED STANDARDS FOR ADDITIONAL INFORMATION.
7. PROPOSED SIGN LOCATIONS MAY BE ADJUSTED AS APPROVED BY THE ENGINEER.

STATE OF TEXAS
JOSEPH R. RUTH
129231
LICENSED
PROFESSIONAL ENGINEER

03/01/2021

Kimley»Horn F-928

© 2021

Texas Department of Transportation

SPECIAL NOTES & DETAILS

LEGEND

APPROX ROW		L1	LANDING COMMON	R	RAMP
ELECTRIC BOX/VAULT		LS	LEVEL SIDEWALK (2% MAX)		RIPRAP (CONC)
ES	EXIST SIDEWALK	SL	LONGITUDINAL SLOPES MAY NOT EXCEED 5% & CROSS SLOPES MAY NOT EXCEED 2%		SAWCUT LINE
ER	EXISTING RAMP				SIDEWALK WALL
FENCE		RAD	RADIUS		SIGN (EXISTING)
FIRE HYDRANT			MANHOLE	XX-X	SIGN NUMBER
F	FLARE		PED SIGNAL POLE (EXIST)		TRAFFIC FLOW
G	GAS METER		PED SIGNAL POLE (PROP)		TRAF SIGNAL POLE (EXIST)
GUY ANCHOR			POWER/ILLUMINATION POLE		TRAF SIGNAL POLE (PROP)
HANDRAIL			PROPOSED ASPHALT PAVING	T	TRANSITION
L	LANDING		PROPOSED CONCRETE PAVING		TREE/BUSHES
PROPOSED SMALL SIGN			PROPOSED SIDEWALK	W	WATER METER

SIDEWALK LAYOUT

BETWEEN TOWNE OAKS DR
AND VILLA DR

SHEET 7 OF 74

FED.RD. DIV.NO.	PROJECT ID.	HIGHWAY NO.
6	(SEE TITLE SHEET)	US 84

STATE	DIST.	COUNTY	SHEET NO.
TEXAS	WAC	MCLENNAN	65
CONT.	SECT.	JOB	
0055	15	072	

FILENAME: pw:\\kh-pw.bentley.com:kh-pw-01\Documents\01 Active Projects\TX-FTW-063586010 - US 84 (Waco Drive)\WAC 0055150724 - Design\Plan Set\3. Roadway\US84_RDW_SP07.dgn
PLOTTED: 12/21/2020

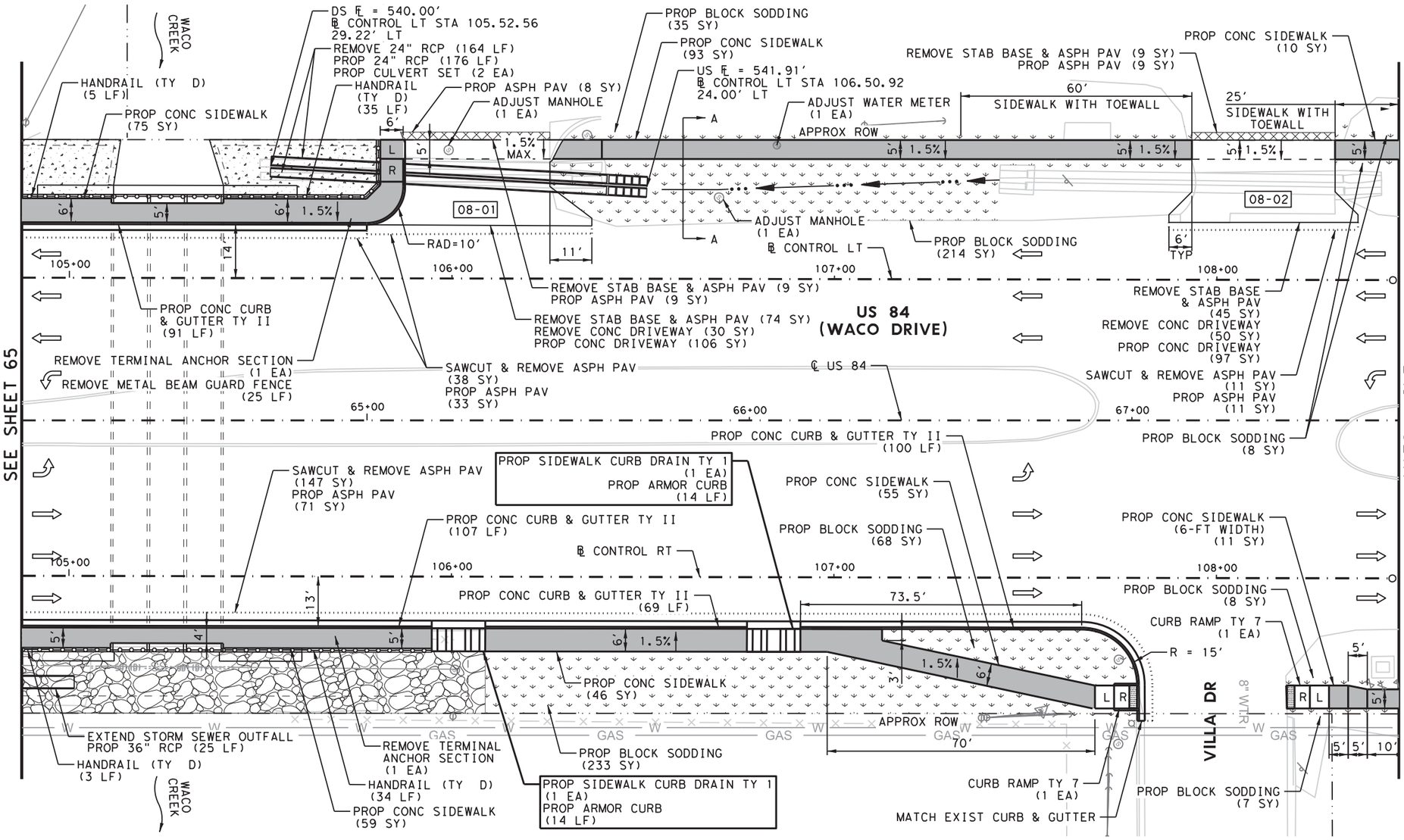

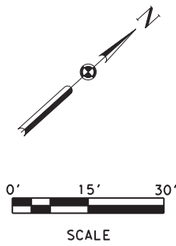

NOTES:

* FOR CONTRACTOR INFORMATION ONLY

1. LINEAR DIMENSIONS ARE TO THE BACK OF CURB.
2. RADII CALLOUTS ARE TO NOMINAL FACE OF CURB UNLESS NOTED OTHERWISE.
3. SIDEWALK CROSS SLOPE IS 1.5% USUAL. MAXIMUM ALLOWABLE CROSS SLOPE ON SIDEWALK IS 2.0%.
4. CONTRACTOR SHALL VERIFY ELEVATIONS AND DIMENSIONS IN THE FIELD PRIOR TO CONSTRUCTION.
5. THE INFORMATION SHOWN IN THESE PLANS CONCERNING TYPE AND LOCATION OF UTILITIES IS NOT GUARANTEED TO BE ACCURATE OR ALL INCLUSIVE. IT SHALL BE THE CONTRACTOR'S RESPONSIBILITY TO VERIFY AND LOCATE ALL EXISTING UTILITIES PRIOR TO CONSTRUCTION. THE CONTRACTOR WILL BE SOLELY RESPONSIBLE FOR ANY DAMAGES BY THEIR CONSTRUCTION OPERATIONS TO EXISTING UTILITIES.
6. REFER TO DRIVEWAY DETAILS, MISCELLANEOUS DETAILS, SIGNAL SHEETS, PAVEMENT MARKING SHEETS, SUMMARY OF SMALL SIGNS, AND TXDOT PED STANDARDS FOR ADDITIONAL INFORMATION.
7. PROPOSED SIGN LOCATIONS MAY BE ADJUSTED AS APPROVED BY THE ENGINEER.

03/01/2021

Kimley»Horn F-928

© 2021

Texas Department of Transportation

SPECIAL NOTES & DETAILS

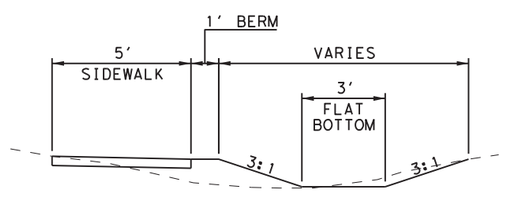

SECTION A-A

LEGEND

APPROX ROW	L1	LANDING COMMON	R	RAMP
ELECTRIC BOX/VAULT	LS	LEVEL SIDEWALK (2% MAX)		RIPRAP (CONC)
ES EXIST SIDEWALK	SL	LONGITUDINAL SLOPES MAY NOT EXCEED 5% & CROSS SLOPES MAY NOT EXCEED 2%		SAWCUT LINE
ER EXISTING RAMP				SIDEWALK WALL
FENCE	RAD	RADIUS		SIGN (EXISTING)
FIRE HYDRANT	Ⓢ	MANHOLE	XX-X	SIGN NUMBER
F FLARE		PED SIGNAL POLE (EXIST)		TRAFFIC FLOW
Ⓖ GAS METER	●	PED SIGNAL POLE (PROP)		TRAF SIGNAL POLE (EXIST)
GUY ANCHOR		POWER/ILLUMINATION POLE		TRAF SIGNAL POLE (PROP)
HANDRAIL		PROPOSED ASPHALT PAVING	T	TRANSITION
L LANDING		PROPOSED CONCRETE PAVING		TREE/BUSHES
PROPOSED SMALL SIGN		PROPOSED SIDEWALK	Ⓦ	WATER METER

SIDEWALK LAYOUT

AT VILLA DR

SHEET 8 OF 74

FED.RD. DIV.NO.	PROJECT ID.	HIGHWAY NO.
6	(SEE TITLE SHEET)	US 84

STATE	DIST.	COUNTY	SHEET NO.
TEXAS	WAC	MCLENNAN	66
CONT.	SECT.	JOB	
0055	15	072	

FILENAME: pw:\\kh-pw.bentley.com:kh-pw-01\Documents\01 Active Projects\TX-FTW-063586010 - US 84 (Waco Drive)\WAC 0055150724 - Design\Plan Set\3. Roadway\US84_RDW_SP08.dgn
PLOTTED: 12/21/2020

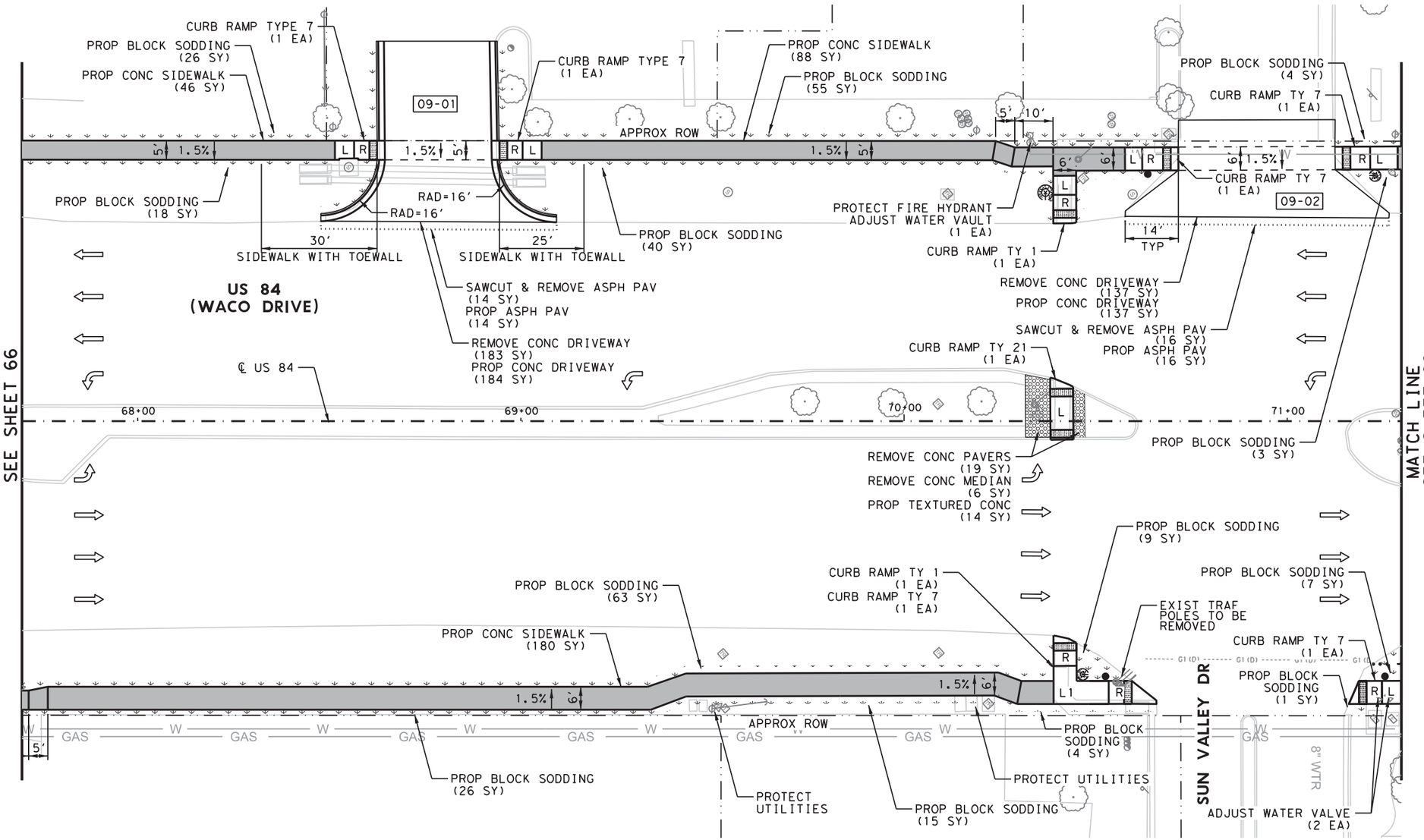

NOTES:

* FOR CONTRACTOR INFORMATION ONLY

1. LINEAR DIMENSIONS ARE TO THE BACK OF CURB.
2. RADII CALLOUTS ARE TO NOMINAL FACE OF CURB UNLESS NOTED OTHERWISE.
3. SIDEWALK CROSS SLOPE IS 1.5% USUAL. MAXIMUM ALLOWABLE CROSS SLOPE ON SIDEWALK IS 2.0%.
4. CONTRACTOR SHALL VERIFY ELEVATIONS AND DIMENSIONS IN THE FIELD PRIOR TO CONSTRUCTION.
5. THE INFORMATION SHOWN IN THESE PLANS CONCERNING TYPE AND LOCATION OF UTILITIES IS NOT GUARANTEED TO BE ACCURATE OR ALL INCLUSIVE. IT SHALL BE THE CONTRACTOR'S RESPONSIBILITY TO VERIFY AND LOCATE ALL EXISTING UTILITIES PRIOR TO CONSTRUCTION. THE CONTRACTOR WILL BE SOLELY RESPONSIBLE FOR ANY DAMAGES BY THEIR CONSTRUCTION OPERATIONS TO EXISTING UTILITIES.
6. REFER TO DRIVEWAY DETAILS, MISCELLANEOUS DETAILS, SIGNAL SHEETS, PAVEMENT MARKING SHEETS, SUMMARY OF SMALL SIGNS, AND TXDOT PED STANDARDS FOR ADDITIONAL INFORMATION.
7. PROPOSED SIGN LOCATIONS MAY BE ADJUSTED AS APPROVED BY THE ENGINEER.

03/01/2021

Kimley»Horn F-928

© 2021

Texas Department of Transportation

SPECIAL NOTES & DETAILS

LEGEND

APPROX ROW		L1	LANDING COMMON	R	RAMP
ELECTRIC BOX/VAULT		LS	LEVEL SIDEWALK (2% MAX)		RIPRAP (CONC)
ES	EXIST SIDEWALK	SL	LONGITUDINAL SLOPES MAY NOT EXCEED 5% & CROSS SLOPES MAY NOT EXCEED 2%		SAWCUT LINE
ER	EXISTING RAMP				SIDEWALK WALL
FENCE		RAD	RADIUS		SIGN (EXISTING)
FIRE HYDRANT		Ⓢ	MANHOLE	XX-X	SIGN NUMBER
F	FLARE		PED SIGNAL POLE (EXIST)		TRAFFIC FLOW
Ⓖ	GAS METER		PED SIGNAL POLE (PROP)		TRAF SIGNAL POLE (EXIST)
	GUY ANCHOR		POWER/ILLUMINATION POLE		TRAF SIGNAL POLE (PROP)
HANDRAIL			PROPOSED ASPHALT PAVING	T	TRANSITION
L	LANDING		PROPOSED CONCRETE PAVING		TREE/BUSHES
	PROPOSED SMALL SIGN		PROPOSED SIDEWALK	Ⓦ	WATER METER

SIDEWALK LAYOUT

AT SUN VALLEY DR

SHEET 9 OF 74

FED.RD. DIV.NO.	PROJECT ID.	HIGHWAY NO.
6	(SEE TITLE SHEET)	US 84

STATE	DIST.	COUNTY	SHEET NO.
TEXAS	WAC	MCLENNAN	67
CONT.	SECT.	JOB	
0055	15	072	

FILENAME: pw:\\kh-pw.bentley.com:kh-pw-01\Documents\01 Active Projects\TX-FTW-063586010 - US 84 (Waco Drive)\WAC 005515072\4 - Design\Plan Set\3. Roadway\US84_RDW_SP09.dgn
PLOTTED: 12/21/2020

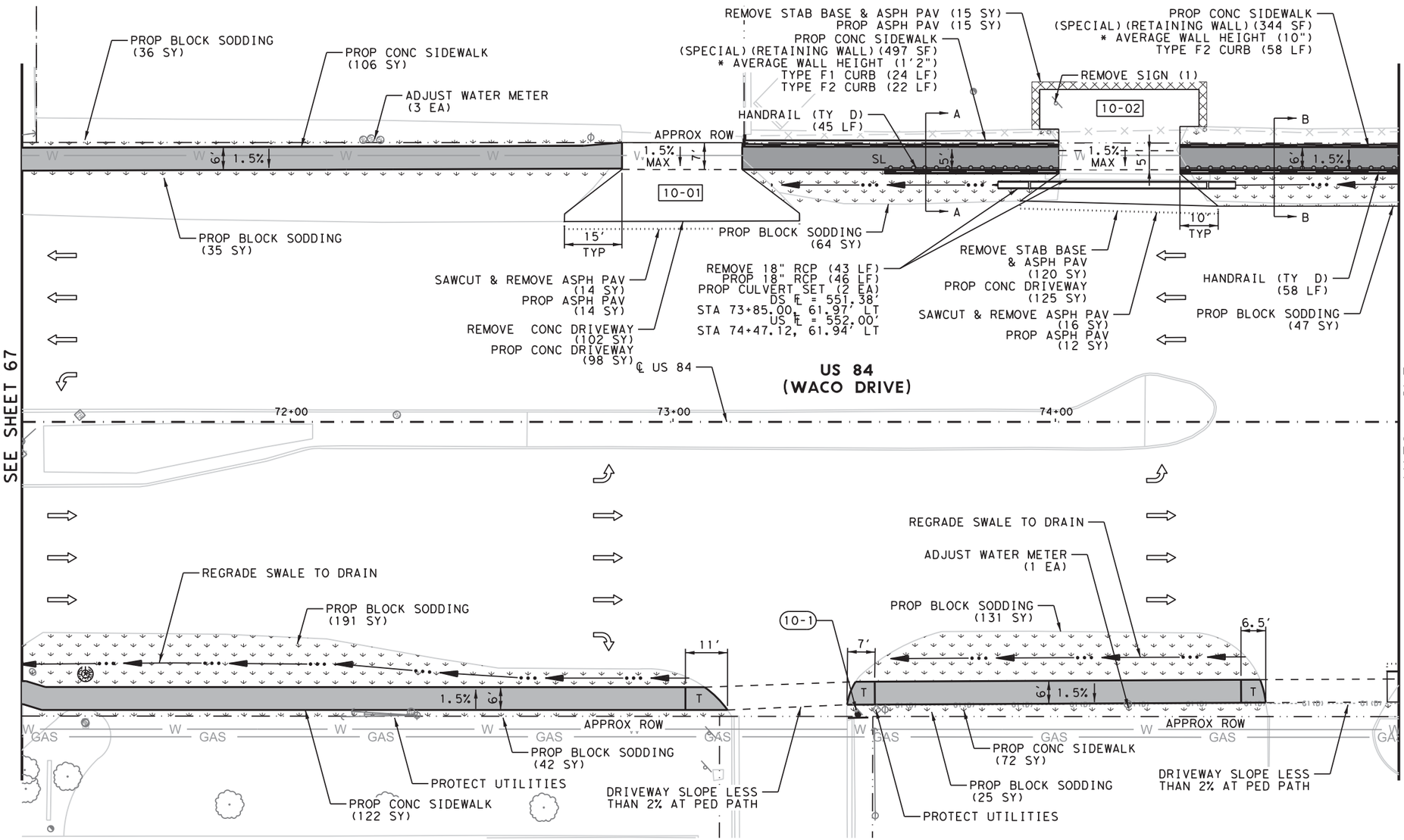

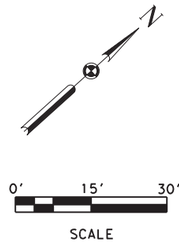

NOTES:

* FOR CONTRACTOR INFORMATION ONLY

1. LINEAR DIMENSIONS ARE TO THE BACK OF CURB.
2. RADII CALLOUTS ARE TO NOMINAL FACE OF CURB UNLESS NOTED OTHERWISE.
3. SIDEWALK CROSS SLOPE IS 1.5% USUAL. MAXIMUM ALLOWABLE CROSS SLOPE ON SIDEWALK IS 2.0%.
4. CONTRACTOR SHALL VERIFY ELEVATIONS AND DIMENSIONS IN THE FIELD PRIOR TO CONSTRUCTION.
5. THE INFORMATION SHOWN IN THESE PLANS CONCERNING TYPE AND LOCATION OF UTILITIES IS NOT GUARANTEED TO BE ACCURATE OR ALL INCLUSIVE. IT SHALL BE THE CONTRACTOR'S RESPONSIBILITY TO VERIFY AND LOCATE ALL EXISTING UTILITIES PRIOR TO CONSTRUCTION. THE CONTRACTOR WILL BE SOLELY RESPONSIBLE FOR ANY DAMAGES BY THEIR CONSTRUCTION OPERATIONS TO EXISTING UTILITIES.
6. REFER TO DRIVEWAY DETAILS, MISCELLANEOUS DETAILS, SIGNAL SHEETS, PAVEMENT MARKING SHEETS, SUMMARY OF SMALL SIGNS, AND TXDOT PED STANDARDS FOR ADDITIONAL INFORMATION.
7. PROPOSED SIGN LOCATIONS MAY BE ADJUSTED AS APPROVED BY THE ENGINEER.

03/01/2021

Kimley»Horn F-928

© 2021

Texas Department of Transportation

SPECIAL NOTES & DETAILS

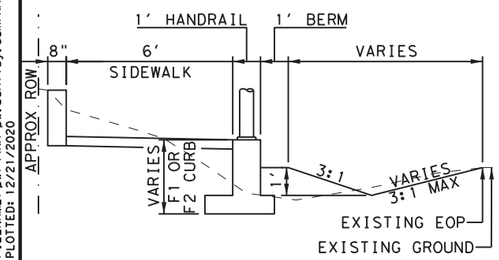

SECTION A-A

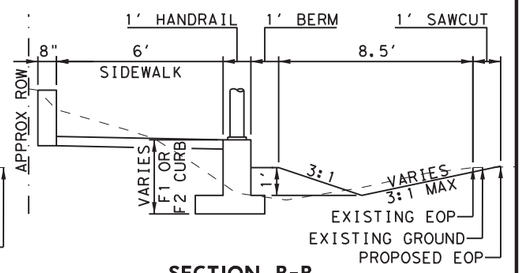

SECTION B-B

LEGEND

APPROX ROW		L1	LANDING COMMON	R	RAMP
ELECTRIC BOX/VAULT		LS	LEVEL SIDEWALK (2% MAX)		RIPRAP (CONC)
ES	EXIST SIDEWALK	SL	LONGITUDINAL SLOPES MAY NOT EXCEED 5% & CROSS SLOPES MAY NOT EXCEED 2%		SAWCUT LINE
ER	EXISTING RAMP				SIDEWALK WALL
	FENCE	RAD	RADIUS		SIGN (EXISTING)
	FIRE HYDRANT	S	MANHOLE	XX-X	SIGN NUMBER
F	FLARE		PED SIGNAL POLE (EXIST)		TRAFFIC FLOW
G	GAS METER		PED SIGNAL POLE (PROP)		TRAF SIGNAL POLE (EXIST)
	GUY ANCHOR		POWER/ILLUMINATION POLE		TRAF SIGNAL POLE (PROP)
	HANDRAIL		PROPOSED ASPHALT PAVING	T	TRANSITION
L	LANDING		PROPOSED CONCRETE PAVING		TREE/BUSHES
	PROPOSED SMALL SIGN		PROPOSED SIDEWALK	W	WATER METER

SIDEWALK LAYOUT

BETWEEN SUN VALLEY DR AND ESTHER ST

SHEET 10 OF 74

FED.RD. DIV.NO.	PROJECT ID.	HIGHWAY NO.
6	(SEE TITLE SHEET)	US 84

STATE	DIST.	COUNTY	SHEET NO.
TEXAS	WAC	MCLENNAN	68
CONT.	SECT.	JOB	
0055	15	072	

FILENAME: pw:\\kh-pw.bentley.com:kh-pw-01\Documents\01 Active Projects\TX-FTW-063586010 - US 84 (Waco Drive)\WAC 0055150724 - Design\Plan Set\3. Roadway\US84_RDW_SP10.dgn
PLOTTED: 12/21/2020

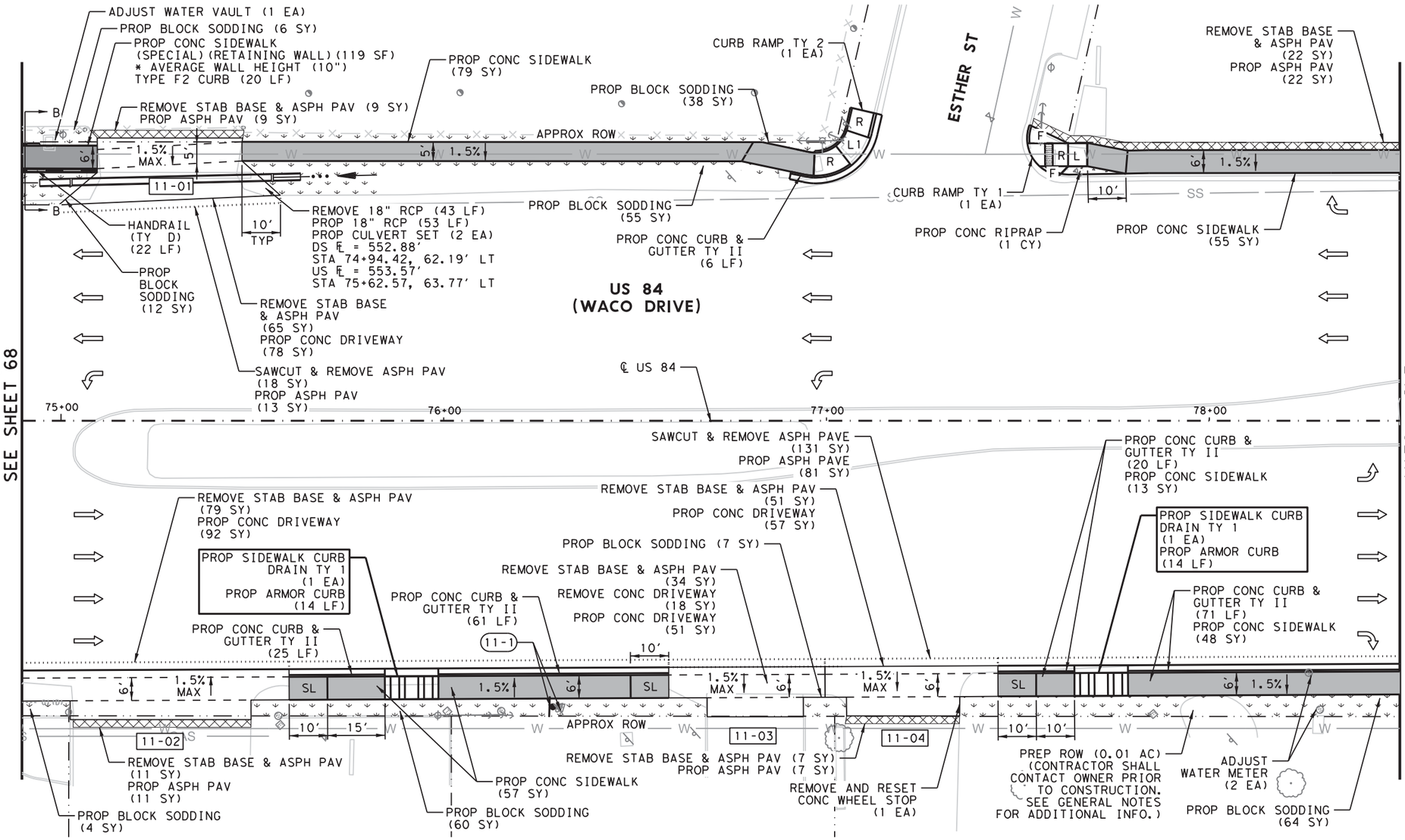

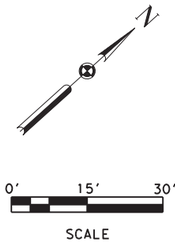

NOTES:

* FOR CONTRACTOR INFORMATION ONLY

1. LINEAR DIMENSIONS ARE TO THE BACK OF CURB.
2. RADII CALLOUTS ARE TO NOMINAL FACE OF CURB UNLESS NOTED OTHERWISE.
3. SIDEWALK CROSS SLOPE IS 1.5% USUAL. MAXIMUM ALLOWABLE CROSS SLOPE ON SIDEWALK IS 2.0%.
4. CONTRACTOR SHALL VERIFY ELEVATIONS AND DIMENSIONS IN THE FIELD PRIOR TO CONSTRUCTION.
5. THE INFORMATION SHOWN IN THESE PLANS CONCERNING TYPE AND LOCATION OF UTILITIES IS NOT GUARANTEED TO BE ACCURATE OR ALL INCLUSIVE. IT SHALL BE THE CONTRACTOR'S RESPONSIBILITY TO VERIFY AND LOCATE ALL EXISTING UTILITIES PRIOR TO CONSTRUCTION. THE CONTRACTOR WILL BE SOLELY RESPONSIBLE FOR ANY DAMAGES BY THEIR CONSTRUCTION OPERATIONS TO EXISTING UTILITIES.
6. REFER TO DRIVEWAY DETAILS, MISCELLANEOUS DETAILS, SIGNAL SHEETS, PAVEMENT MARKING SHEETS, SUMMARY OF SMALL SIGNS, AND TXDOT PED STANDARDS FOR ADDITIONAL INFORMATION.
7. PROPOSED SIGN LOCATIONS MAY BE ADJUSTED AS APPROVED BY THE ENGINEER.

03/01/2021

Kimley»Horn F-928

© 2021

Texas Department of Transportation

SPECIAL NOTES & DETAILS

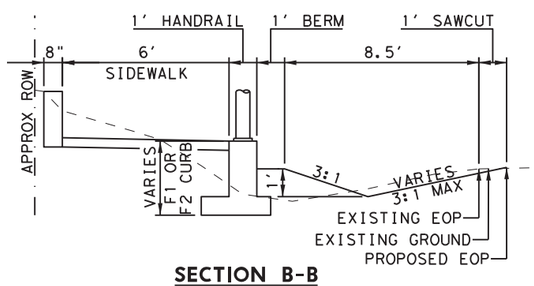

SECTION B-B

LEGEND

APPROX ROW	L1	LANDING COMMON	R	RAMP
ELECTRIC BOX/VAULT	LS	LEVEL SIDEWALK (2% MAX)	RIPRAP (CONC)	
ES	EXIST SIDEWALK	SL	LONGITUDINAL SLOPES MAY NOT EXCEED 5% & CROSS SLOPES MAY NOT EXCEED 2%	SAWCUT LINE	
ER	EXISTING RAMP			SIDEWALK WALL	
FENCE	RAD	RADIUS	SIGN (EXISTING)	
FIRE HYDRANT	Ⓢ	MANHOLE	XX-X	SIGN NUMBER	
F	FLARE		PED SIGNAL POLE (EXIST)	TRAFFIC FLOW	
Ⓖ	GAS METER		PED SIGNAL POLE (PROP)	TRAF SIGNAL POLE (EXIST)	
GUY ANCHOR	ϕ	POWER/ILLUMINATION POLE	TRAF SIGNAL POLE (PROP)	
HANDRAIL		PROPOSED ASPHALT PAVING	T	TRANSITION	
L	LANDING		PROPOSED CONCRETE PAVING	TREE/BUSHES	
PROPOSED SMALL SIGN		PROPOSED SIDEWALK	Ⓦ	WATER METER	

SIDEWALK LAYOUT

AT ESTHER ST

SHEET 11 OF 74

FED.RD. DIV.NO.	PROJECT ID.	HIGHWAY NO.
6	(SEE TITLE SHEET)	US 84

STATE	DIST.	COUNTY	SHEET NO.
TEXAS	WAC	MCLENNAN	69
CONT.	SECT.	JOB	
0055	15	072	

FILENAME: pw:\\kh-pw.bentley.com:kh-pw-01\Documents\01 Active Projects\TX-FTW-063586010 - US 84 (Waco Drive)\WAC 0055150724 - Design\Plan Set\3. Roadway\US84_RDW_SP11.dgn
PLOTTED: 12/21/2020

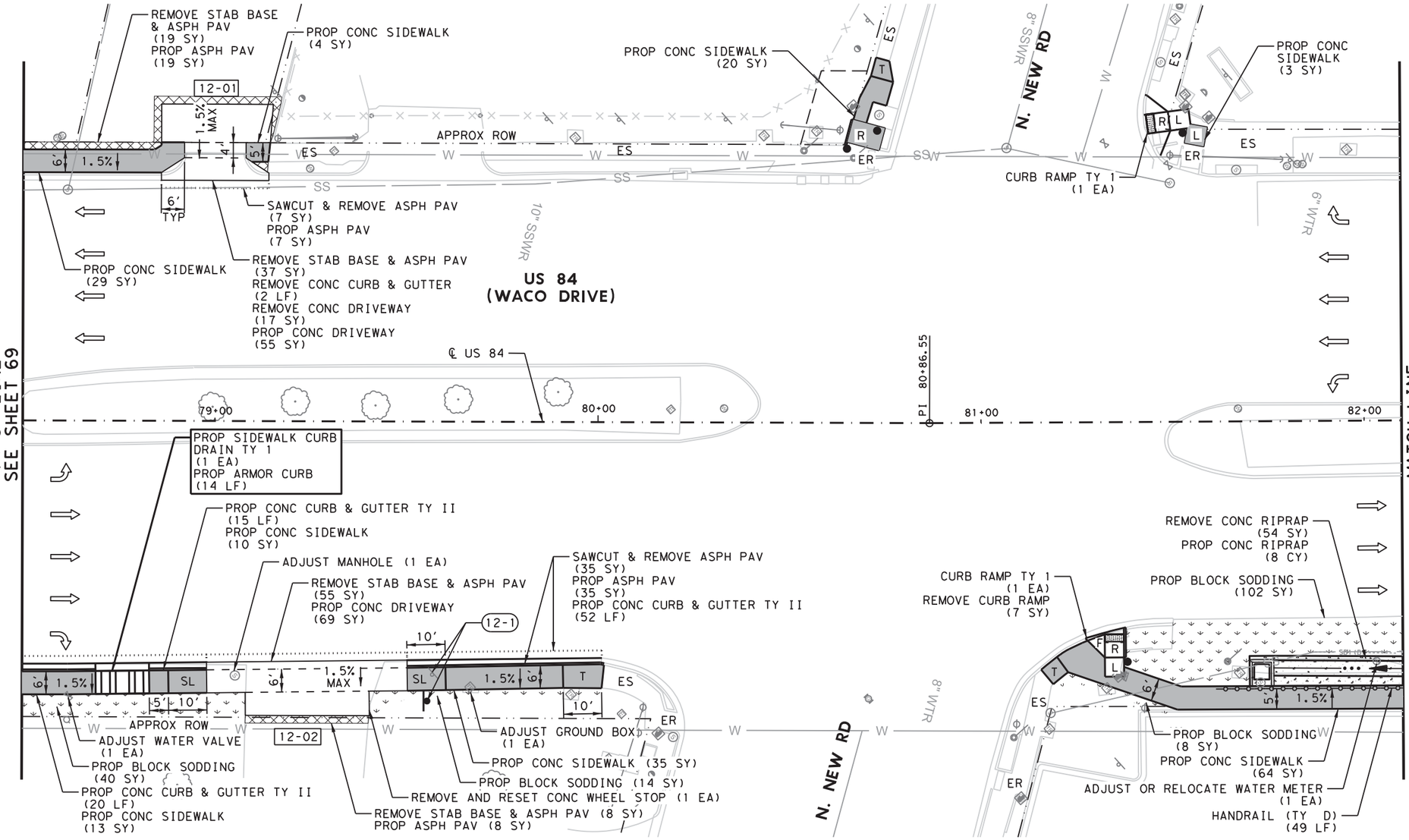

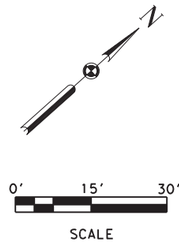

NOTES:

* FOR CONTRACTOR INFORMATION ONLY

1. LINEAR DIMENSIONS ARE TO THE BACK OF CURB.
2. RADII CALLOUTS ARE TO NOMINAL FACE OF CURB UNLESS NOTED OTHERWISE.
3. SIDEWALK CROSS SLOPE IS 1.5% USUAL. MAXIMUM ALLOWABLE CROSS SLOPE ON SIDEWALK IS 2.0%.
4. CONTRACTOR SHALL VERIFY ELEVATIONS AND DIMENSIONS IN THE FIELD PRIOR TO CONSTRUCTION.
5. THE INFORMATION SHOWN IN THESE PLANS CONCERNING TYPE AND LOCATION OF UTILITIES IS NOT GUARANTEED TO BE ACCURATE OR ALL INCLUSIVE. IT SHALL BE THE CONTRACTOR'S RESPONSIBILITY TO VERIFY AND LOCATE ALL EXISTING UTILITIES PRIOR TO CONSTRUCTION. THE CONTRACTOR WILL BE SOLELY RESPONSIBLE FOR ANY DAMAGES BY THEIR CONSTRUCTION OPERATIONS TO EXISTING UTILITIES.
6. REFER TO DRIVEWAY DETAILS, MISCELLANEOUS DETAILS, SIGNAL SHEETS, PAVEMENT MARKING SHEETS, SUMMARY OF SMALL SIGNS, AND TXDOT PED STANDARDS FOR ADDITIONAL INFORMATION.
7. PROPOSED SIGN LOCATIONS MAY BE ADJUSTED AS APPROVED BY THE ENGINEER.

03/01/2021

Kimley»Horn F-928

© 2021

Texas Department of Transportation

SPECIAL NOTES & DETAILS

LEGEND

APPROX ROW	L1	LANDING COMMON	R	RAMP
ELECTRIC BOX/VAULT	LS	LEVEL SIDEWALK (2% MAX)	RIPRAP (CONC)	
ES	EXIST SIDEWALK	SL	LONGITUDINAL SLOPES MAY NOT EXCEED 5% & CROSS SLOPES MAY NOT EXCEED 2%	SAWCUT LINE	
ER	EXISTING RAMP			SIDEWALK WALL	
FENCE	RAD	RADIUS	SIGN (EXISTING)	
FIRE HYDRANT	MANHOLE	SIGN NUMBER	
F	FLARE	PED SIGNAL POLE (EXIST)	TRAFFIC FLOW	
GAS METER	PED SIGNAL POLE (PROP)	TRAF SIGNAL POLE (EXIST)	
GUY ANCHOR	POWER/ILLUMINATION POLE	TRAF SIGNAL POLE (PROP)	
HANDRAIL	PROPOSED ASPHALT PAVING	T	TRANSITION
L	LANDING	PROPOSED CONCRETE PAVING	TREE/BUSHES	
PROPOSED SMALL SIGN	PROPOSED SIDEWALK	WATER METER	

SIDEWALK LAYOUT

AT N NEW RD

SHEET 12 OF 74

FED.RD. DIV.NO.	PROJECT ID.	HIGHWAY NO.
6	(SEE TITLE SHEET)	US 84

STATE	DIST.	COUNTY	SHEET NO.
TEXAS	WAC	MCLENNAN	70
CONT.	SECT.	JOB	
0055	15	072	

FILENAME: pw:\\Kh-pw.bentley.com:kh-pw-01\Documents\01 Active Projects\TX-FTW-063586010 - US 84 (Waco Drive)\WAC 0055150724 - Design\Plan Set\3. Roadway\US84_RDW_SP12.dgn
PLOTTED: 12/21/2020

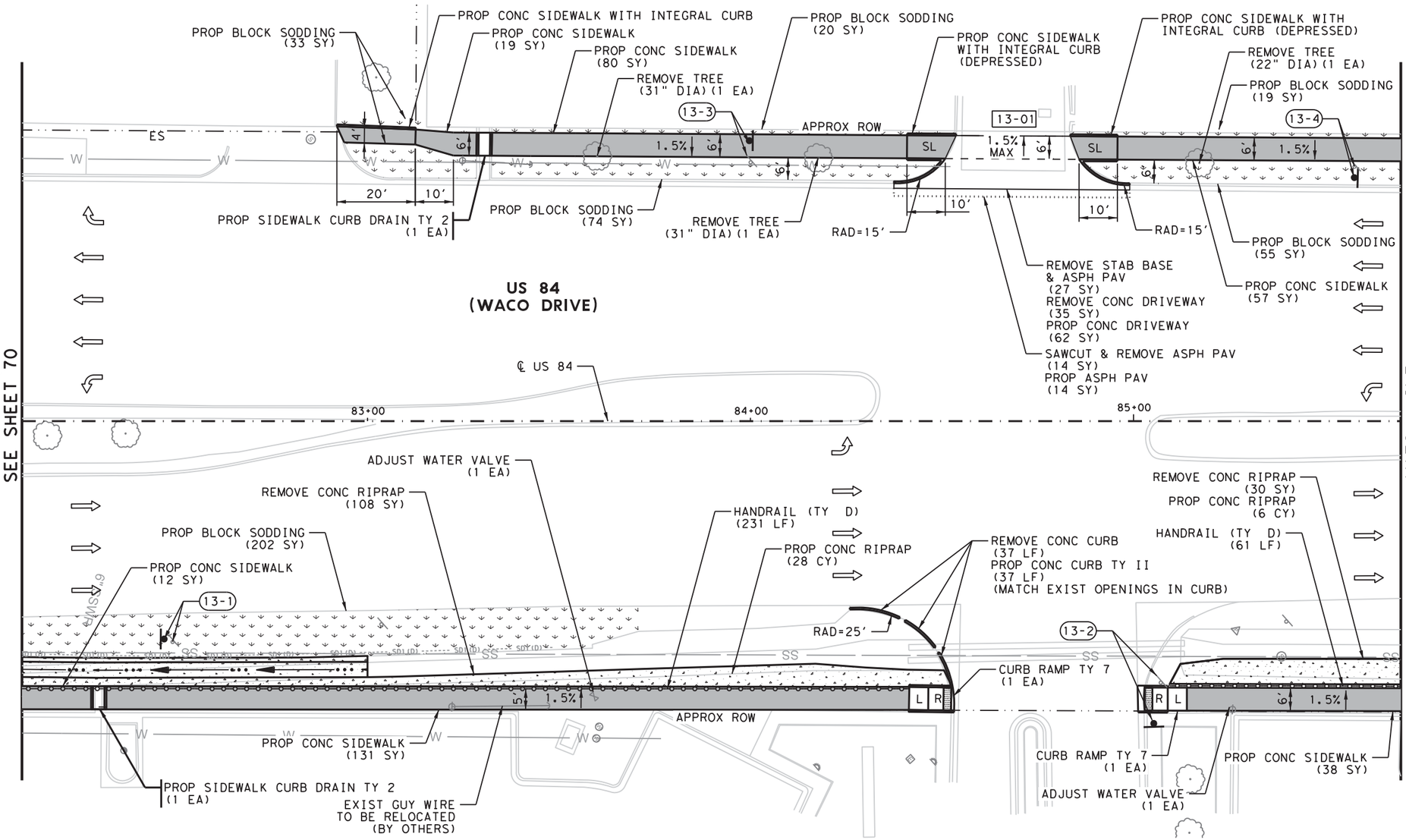

0' 15' 30'

SCALE

NOTES:

* FOR CONTRACTOR INFORMATION ONLY

1. LINEAR DIMENSIONS ARE TO THE BACK OF CURB.
2. RADII CALLOUTS ARE TO NOMINAL FACE OF CURB UNLESS NOTED OTHERWISE.
3. SIDEWALK CROSS SLOPE IS 1.5% USUAL. MAXIMUM ALLOWABLE CROSS SLOPE ON SIDEWALK IS 2.0%.
4. CONTRACTOR SHALL VERIFY ELEVATIONS AND DIMENSIONS IN THE FIELD PRIOR TO CONSTRUCTION.
5. THE INFORMATION SHOWN IN THESE PLANS CONCERNING TYPE AND LOCATION OF UTILITIES IS NOT GUARANTEED TO BE ACCURATE OR ALL INCLUSIVE. IT SHALL BE THE CONTRACTOR'S RESPONSIBILITY TO VERIFY AND LOCATE ALL EXISTING UTILITIES PRIOR TO CONSTRUCTION. THE CONTRACTOR WILL BE SOLELY RESPONSIBLE FOR ANY DAMAGES BY THEIR CONSTRUCTION OPERATIONS TO EXISTING UTILITIES.
6. REFER TO DRIVEWAY DETAILS, MISCELLANEOUS DETAILS, SIGNAL SHEETS, PAVEMENT MARKING SHEETS, SUMMARY OF SMALL SIGNS, AND TXDOT PED STANDARDS FOR ADDITIONAL INFORMATION.
7. PROPOSED SIGN LOCATIONS MAY BE ADJUSTED AS APPROVED BY THE ENGINEER.

STATE OF TEXAS — JESSICA RUTH — 129231 — LICENSED PROFESSIONAL ENGINEER

03/01/2021

Kimley»Horn F-928

© 2021

Texas Department of Transportation

SPECIAL NOTES & DETAILS

LEGEND

APPROX ROW	L1	LANDING COMMON	R	RAMP	
ELECTRIC BOX/VAULT	LS	LEVEL SIDEWALK (2% MAX)		RIPRAP (CONC)	
ES EXIST SIDEWALK	SL	LONGITUDINAL SLOPES MAY NOT EXCEED 5% & CROSS SLOPES MAY NOT EXCEED 2%		SAWCUT LINE	
ER EXISTING RAMP				SIDEWALK WALL	
FENCE	RAD	RADIUS		SIGN (EXISTING)	
FIRE HYDRANT	Ⓢ	MANHOLE	XX-X	SIGN NUMBER	
F FLARE		PED SIGNAL POLE (EXIST)		TRAFFIC FLOW	
Ⓖ GAS METER	●	PED SIGNAL POLE (PROP)		TRAF SIGNAL POLE (EXIST)	
GUY ANCHOR		POWER/ILLUMINATION POLE		TRAF SIGNAL POLE (PROP)	
HANDRAIL		PROPOSED ASPHALT PAVING	T	TRANSITION	
L LANDING		PROPOSED CONCRETE PAVING		TREE/BUSHES	
PROPOSED SMALL SIGN		PROPOSED SIDEWALK	W	WATER METER	

SIDEWALK LAYOUT

BETWEEN N NEW RD AND
LOOP 396 (N VALLEY MILLS DR)

SHEET 13 OF 74

FED.RD. DIV.NO.	PROJECT ID.	HIGHWAY NO.
6	(SEE TITLE SHEET)	US 84

STATE	DIST.	COUNTY	SHEET NO.
TEXAS	WAC	MCLENNAN	71
CONT.	SECT.	JOB	
0055	15	072	

FILENAME: pw:\\kh-pw.bentley.com:kh-pw-01\Documents\01 Active Projects\TX-FTW-063586010 - US 84 (Waco Drive)\WAC 0055150724 - Design\Plan Set\3. Roadway\US84_RDW_SP13.dgn
PLOTTED: 12/21/2020

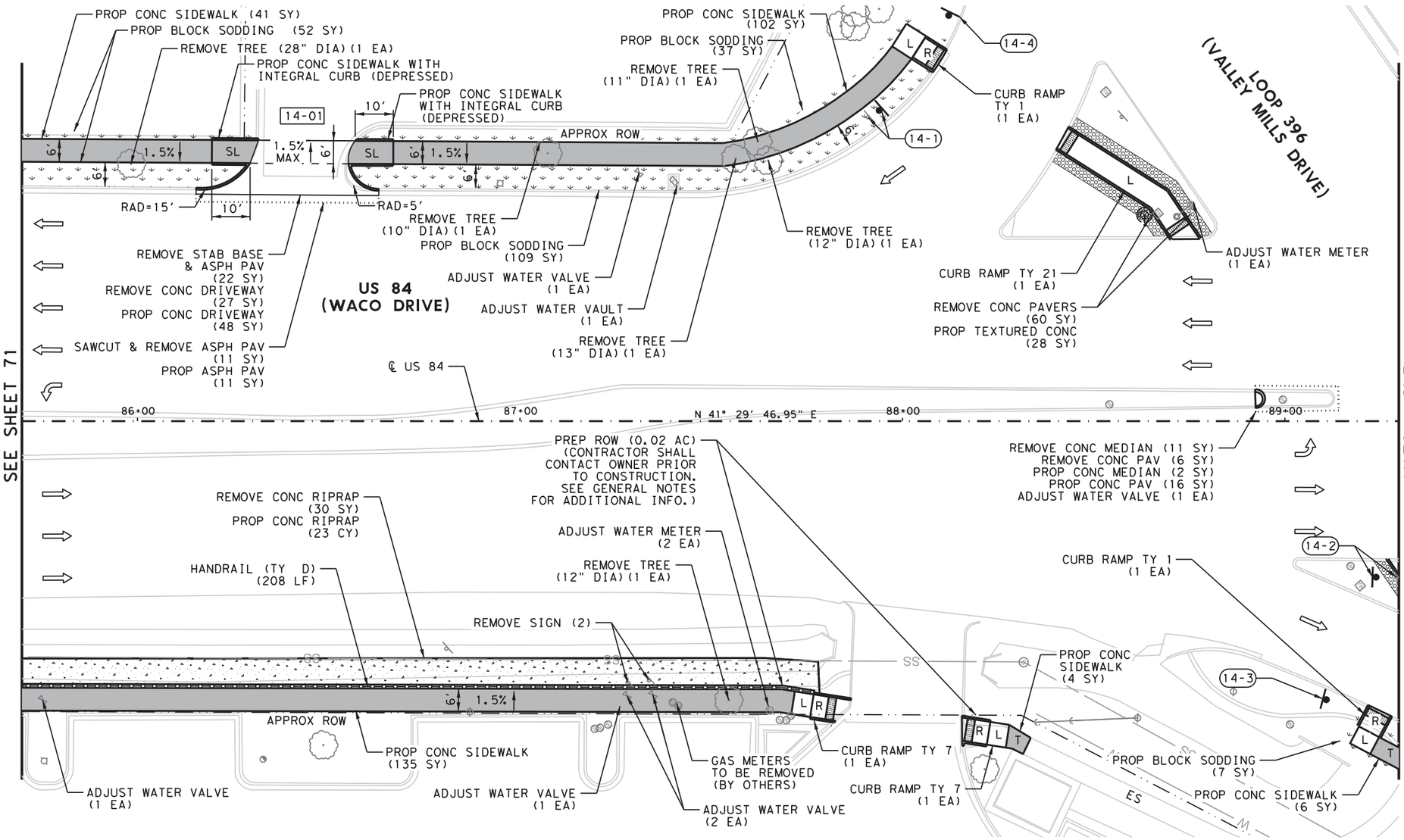

NOTES:

* FOR CONTRACTOR INFORMATION ONLY

1. LINEAR DIMENSIONS ARE TO THE BACK OF CURB.
2. RADII CALLOUTS ARE TO NOMINAL FACE OF CURB UNLESS NOTED OTHERWISE.
3. SIDEWALK CROSS SLOPE IS 1.5% USUAL. MAXIMUM ALLOWABLE CROSS SLOPE ON SIDEWALK IS 2.0%.
4. CONTRACTOR SHALL VERIFY ELEVATIONS AND DIMENSIONS IN THE FIELD PRIOR TO CONSTRUCTION.
5. THE INFORMATION SHOWN IN THESE PLANS CONCERNING TYPE AND LOCATION OF UTILITIES IS NOT GUARANTEED TO BE ACCURATE OR ALL INCLUSIVE. IT SHALL BE THE CONTRACTOR'S RESPONSIBILITY TO VERIFY AND LOCATE ALL EXISTING UTILITIES PRIOR TO CONSTRUCTION. THE CONTRACTOR WILL BE SOLELY RESPONSIBLE FOR ANY DAMAGES BY THEIR CONSTRUCTION OPERATIONS TO EXISTING UTILITIES.
6. REFER TO DRIVEWAY DETAILS, MISCELLANEOUS DETAILS, SIGNAL SHEETS, PAVEMENT MARKING SHEETS, SUMMARY OF SMALL SIGNS, AND TXDOT PED STANDARDS FOR ADDITIONAL INFORMATION.
7. PROPOSED SIGN LOCATIONS MAY BE ADJUSTED AS APPROVED BY THE ENGINEER.

03/01/2021

Kimley»Horn F-928

© 2021

Texas Department of Transportation

SPECIAL NOTES & DETAILS

LEGEND

APPROX ROW	L1	LANDING COMMON	R	RAMP
ELECTRIC BOX/VAULT	LS	LEVEL SIDEWALK (2% MAX)		RIPRAP (CONC)
ES EXIST SIDEWALK	SL	LONGITUDINAL SLOPES MAY NOT EXCEED 5% & CROSS SLOPES MAY NOT EXCEED 2%		SAWCUT LINE
ER EXISTING RAMP				SIDEWALK WALL
FENCE	RAD	RADIUS		SIGN (EXISTING)
FIRE HYDRANT	Ⓢ	MANHOLE	XX-X	SIGN NUMBER
F FLARE		PED SIGNAL POLE (EXIST)		TRAFFIC FLOW
Ⓖ GAS METER	●	PED SIGNAL POLE (PROP)		TRAF SIGNAL POLE (EXIST)
GUY ANCHOR	ϕ	POWER/ILLUMINATION POLE	Ⓣ	TRAF SIGNAL POLE (PROP)
HANDRAIL		PROPOSED ASPHALT PAVING	T	TRANSITION
L LANDING		PROPOSED CONCRETE PAVING		TREE/BUSHES
PROPOSED SMALL SIGN		PROPOSED SIDEWALK	Ⓦ	WATER METER

SIDEWALK LAYOUT

AT LOOP 396
(N VALLEY MILLS RD)

SHEET 14 OF 74

FED. RD. DIV. NO.	PROJECT ID.	HIGHWAY NO.
6	(SEE TITLE SHEET)	US 84

STATE	DIST.	COUNTY	SHEET NO.
TEXAS	WAC	MCLENNAN	72
CONT.	SECT.	JOB	
0055	15	072	

FILENAME: pw:\\kh-pw.bentley.com:kh-pw-01\Documents\01 Active Projects\TX-FTW-063586010 - US 84 (Waco Drive)\WAC 005515072\4 - Design\Plan Set\3. Roadway\US84_RDW_SP14.dgn
PLOTTED: 12/21/2020

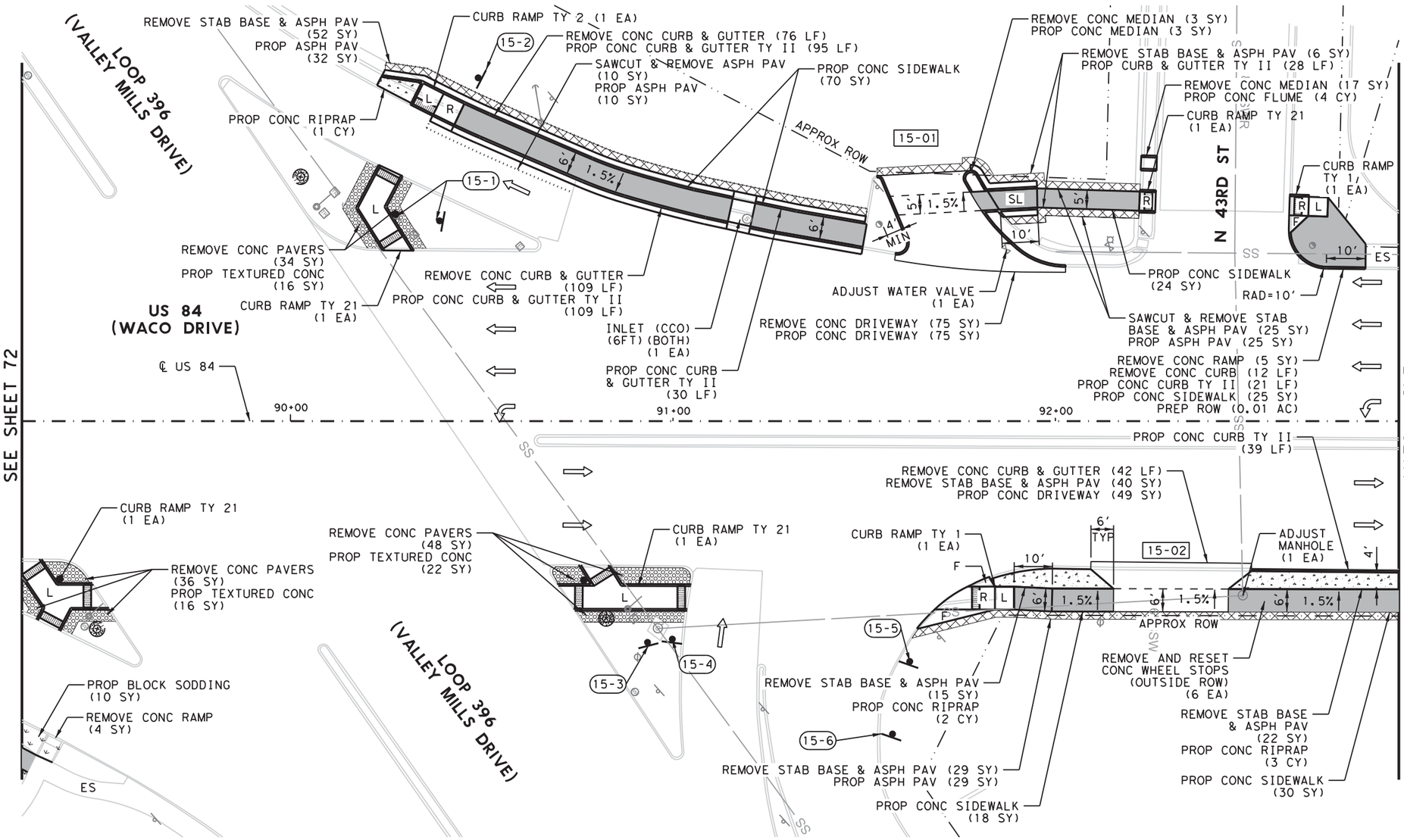

0' 15' 30'

SCALE

NOTES:

* FOR CONTRACTOR INFORMATION ONLY

1. LINEAR DIMENSIONS ARE TO THE BACK OF CURB.
2. RADII CALLOUTS ARE TO NOMINAL FACE OF CURB UNLESS NOTED OTHERWISE.
3. SIDEWALK CROSS SLOPE IS 1.5% USUAL. MAXIMUM ALLOWABLE CROSS SLOPE ON SIDEWALK IS 2.0%.
4. CONTRACTOR SHALL VERIFY ELEVATIONS AND DIMENSIONS IN THE FIELD PRIOR TO CONSTRUCTION.
5. THE INFORMATION SHOWN IN THESE PLANS CONCERNING TYPE AND LOCATION OF UTILITIES IS NOT GUARANTEED TO BE ACCURATE OR ALL INCLUSIVE. IT SHALL BE THE CONTRACTOR'S RESPONSIBILITY TO VERIFY AND LOCATE ALL EXISTING UTILITIES PRIOR TO CONSTRUCTION. THE CONTRACTOR WILL BE SOLELY RESPONSIBLE FOR ANY DAMAGES BY THEIR CONSTRUCTION OPERATIONS TO EXISTING UTILITIES.
6. REFER TO DRIVEWAY DETAILS, MISCELLANEOUS DETAILS, SIGNAL SHEETS, PAVEMENT MARKING SHEETS, SUMMARY OF SMALL SIGNS, AND TXDOT PED STANDARDS FOR ADDITIONAL INFORMATION.
7. PROPOSED SIGN LOCATIONS MAY BE ADJUSTED AS APPROVED BY THE ENGINEER.

03/01/2021

Kimley»Horn F-928

© 2021

Texas Department of Transportation

SPECIAL NOTES & DETAILS

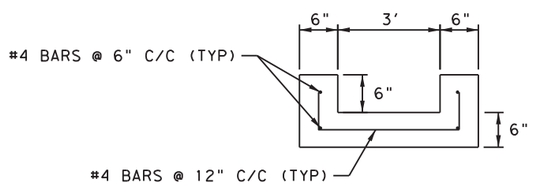

CONCRETE FLUME DETAIL

LEGEND

APPROX ROW	L1	LANDING COMMON	R	RAMP
ELECTRIC BOX/VAULT	LS	LEVEL SIDEWALK (2% MAX)	RIPRAP (CONC)
ES	EXIST SIDEWALK	SL	LONGITUDINAL SLOPES MAY NOT EXCEED 5% & CROSS SLOPES MAY NOT EXCEED 2%	SAWCUT LINE
ER	EXISTING RAMP			SIDEWALK WALL
FENCE	RAD	RADIUS	SIGN (EXISTING)
FIRE HYDRANT	MANHOLE	SIGN NUMBER
F	FLARE	PED SIGNAL POLE (EXIST)	TRAFFIC FLOW
GAS METER	PED SIGNAL POLE (PROP)	TRAF SIGNAL POLE (EXIST)
GUY ANCHOR	POWER/ILLUMINATION POLE	TRAF SIGNAL POLE (PROP)
HANDRAIL	PROPOSED ASPHALT PAVING	T	TRANSITION
L	LANDING	PROPOSED CONCRETE PAVING	TREE/BUSHES
PROPOSED SMALL SIGN	PROPOSED SIDEWALK	WATER METER

SIDEWALK LAYOUT

AT N 43RD ST

SHEET 15 OF 74

FED. RD. DIV. NO.	PROJECT ID.	HIGHWAY NO.
6	(SEE TITLE SHEET)	US 84

STATE	DIST.	COUNTY	SHEET NO.
TEXAS	WAC	MCLENNAN	73
CONT.	SECT.	JOB	
0055	15	072	

FILENAME: pw:\\kh-pw.bentley.com:kh-pw-01\Documents\01 Active Projects\TX-FTW-063586010 - US 84 (Waco Drive)\WAC 0055150724 - Design\Plan Set\3. Roadway\US84_RDW_SP15.dgn
PLOTTED: 12/21/2020

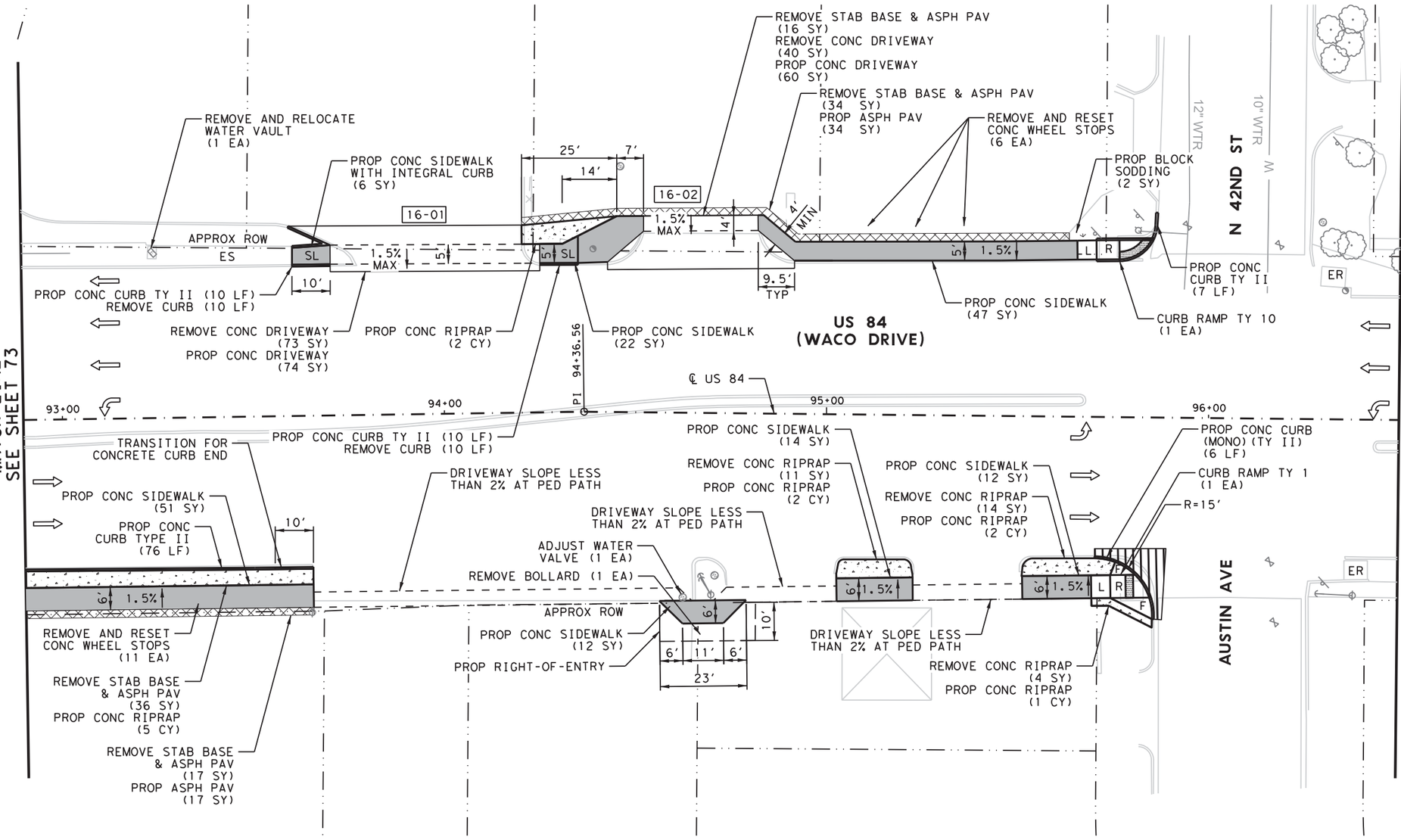

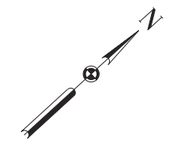

NOTES:

* FOR CONTRACTOR INFORMATION ONLY

1. LINEAR DIMENSIONS ARE TO THE BACK OF CURB.
2. RADII CALLOUTS ARE TO NOMINAL FACE OF CURB UNLESS NOTED OTHERWISE.
3. SIDEWALK CROSS SLOPE IS 1.5% USUAL. MAXIMUM ALLOWABLE CROSS SLOPE ON SIDEWALK IS 2.0%.
4. CONTRACTOR SHALL VERIFY ELEVATIONS AND DIMENSIONS IN THE FIELD PRIOR TO CONSTRUCTION.
5. THE INFORMATION SHOWN IN THESE PLANS CONCERNING TYPE AND LOCATION OF UTILITIES IS NOT GUARANTEED TO BE ACCURATE OR ALL INCLUSIVE. IT SHALL BE THE CONTRACTOR'S RESPONSIBILITY TO VERIFY AND LOCATE ALL EXISTING UTILITIES PRIOR TO CONSTRUCTION. THE CONTRACTOR WILL BE SOLELY RESPONSIBLE FOR ANY DAMAGES BY THEIR CONSTRUCTION OPERATIONS TO EXISTING UTILITIES.
6. REFER TO DRIVEWAY DETAILS, MISCELLANEOUS DETAILS, SIGNAL SHEETS, PAVEMENT MARKING SHEETS, SUMMARY OF SMALL SIGNS, AND TXDOT PED STANDARDS FOR ADDITIONAL INFORMATION.
7. PROPOSED SIGN LOCATIONS MAY BE ADJUSTED AS APPROVED BY THE ENGINEER.

03/01/2021

Kimley»Horn F-928

© 2021

Texas Department of Transportation

SPECIAL NOTES & DETAILS

LEGEND

APPROX ROW	L1	LANDING COMMON	R	RAMP
ELECTRIC BOX/VAULT	LS	LEVEL SIDEWALK (2% MAX)		RIPRAP (CONC)
ES EXIST SIDEWALK	SL	LONGITUDINAL SLOPES MAY NOT EXCEED 5% & CROSS SLOPES MAY NOT EXCEED 2%		SAWCUT LINE
ER EXISTING RAMP				SIDEWALK WALL
FENCE	RAD	RADIUS		SIGN (EXISTING)
FIRE HYDRANT	Ⓢ	MANHOLE	XX-X	SIGN NUMBER
F FLARE		PED SIGNAL POLE (EXIST)		TRAFFIC FLOW
Ⓖ GAS METER		PED SIGNAL POLE (PROP)		TRAF SIGNAL POLE (EXIST)
GUY ANCHOR		POWER/ILLUMINATION POLE		TRAF SIGNAL POLE (PROP)
HANDRAIL		PROPOSED ASPHALT PAVING	T	TRANSITION
L LANDING		PROPOSED CONCRETE PAVING		TREE/BUSHES
PROPOSED SMALL SIGN		PROPOSED SIDEWALK	Ⓦ	WATER METER

SIDEWALK LAYOUT

AT N 42ND ST

SHEET 16 OF 74

FED.RD. DIV.NO.	PROJECT ID.	HIGHWAY NO.
6	(SEE TITLE SHEET)	US 84

STATE	DIST.	COUNTY	SHEET NO.
TEXAS	WAC	MCLENNAN	74
CONT.	SECT.	JOB	
0055	15	072	

FILENAME: pw:\\kh-pw.bentley.com:kh-pw-01\Documents\01 Active Projects\TX-FTW-063586010 - US 84 (Waco Drive)\WAC 0055150724 - Design\Plan Set\3. Roadway\US84_RDW_SP16.dgn
PLOTTED: 12/21/2020

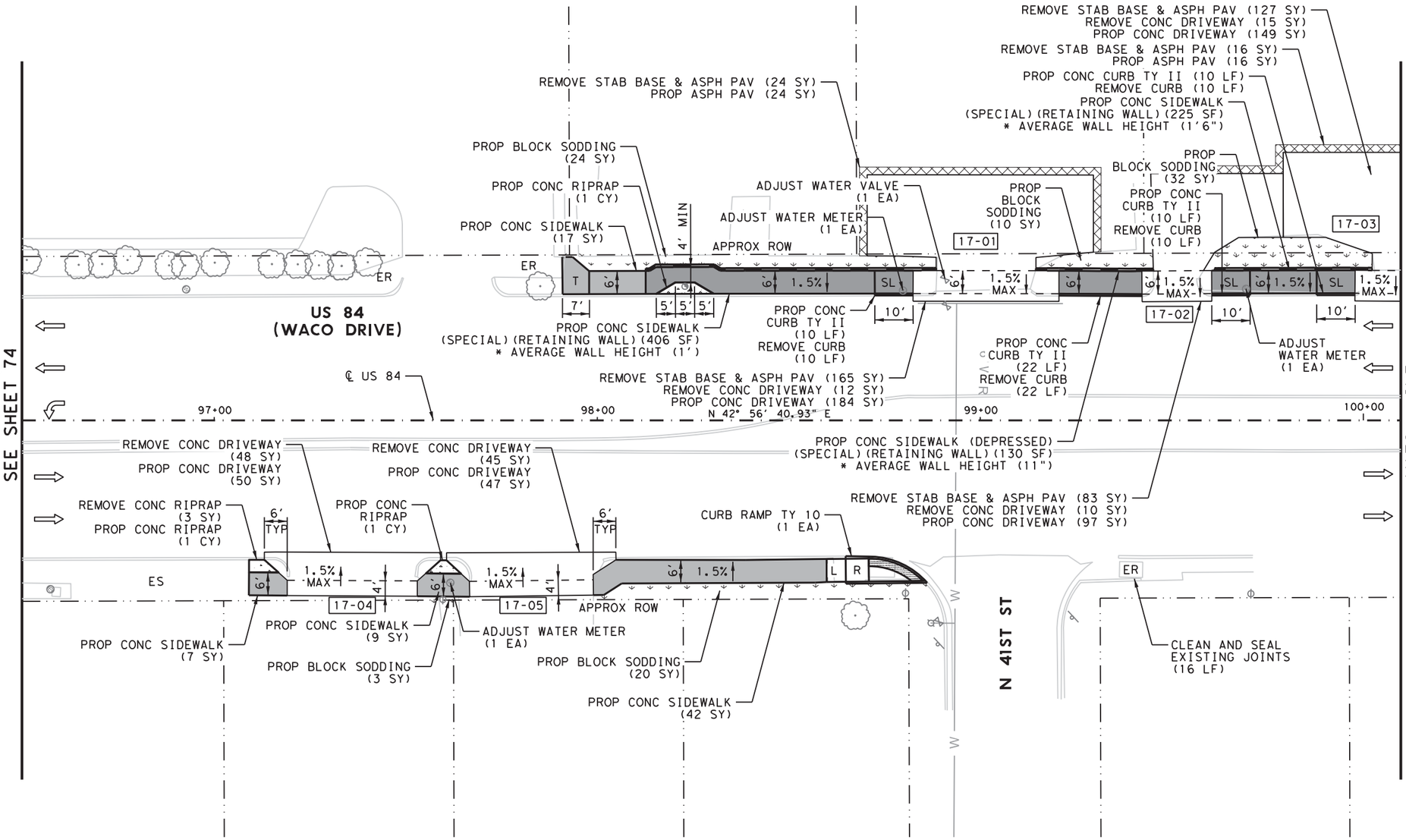

0' 15' 30'

SCALE

NOTES:

* FOR CONTRACTOR INFORMATION ONLY

1. LINEAR DIMENSIONS ARE TO THE BACK OF CURB.
2. RADII CALLOUTS ARE TO NOMINAL FACE OF CURB UNLESS NOTED OTHERWISE.
3. SIDEWALK CROSS SLOPE IS 1.5% USUAL. MAXIMUM ALLOWABLE CROSS SLOPE ON SIDEWALK IS 2.0%.
4. CONTRACTOR SHALL VERIFY ELEVATIONS AND DIMENSIONS IN THE FIELD PRIOR TO CONSTRUCTION.
5. THE INFORMATION SHOWN IN THESE PLANS CONCERNING TYPE AND LOCATION OF UTILITIES IS NOT GUARANTEED TO BE ACCURATE OR ALL INCLUSIVE. IT SHALL BE THE CONTRACTOR'S RESPONSIBILITY TO VERIFY AND LOCATE ALL EXISTING UTILITIES PRIOR TO CONSTRUCTION. THE CONTRACTOR WILL BE SOLELY RESPONSIBLE FOR ANY DAMAGES BY THEIR CONSTRUCTION OPERATIONS TO EXISTING UTILITIES.
6. REFER TO DRIVEWAY DETAILS, MISCELLANEOUS DETAILS, SIGNAL SHEETS, PAVEMENT MARKING SHEETS, SUMMARY OF SMALL SIGNS, AND TXDOT PED STANDARDS FOR ADDITIONAL INFORMATION.
7. PROPOSED SIGN LOCATIONS MAY BE ADJUSTED AS APPROVED BY THE ENGINEER.

03/01/2021

Kimley»Horn F-928

© 2021

Texas Department of Transportation

SPECIAL NOTES & DETAILS

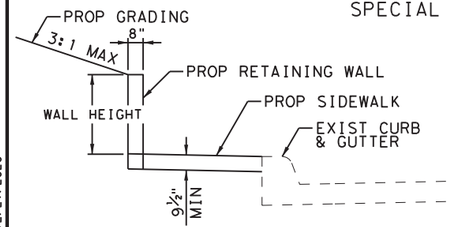

RETAINING WALL DETAIL

NTS

SEE CONCRETE SIDEWALK DETAILS FOR ADDITIONAL WALL AND SIDEWALK INFORMATION.

LEGEND

APPROX ROW	L1	LANDING COMMON	R	RAMP
ELECTRIC BOX/VAULT	LS	LEVEL SIDEWALK (2% MAX)		RIPRAP (CONC)
ES	EXIST SIDEWALK	SL	LONGITUDINAL SLOPES MAY NOT EXCEED 5% & CROSS SLOPES MAY NOT EXCEED 2%	- - -	SAWCUT LINE
ER	EXISTING RAMP				SIDEWALK WALL
—×—	FENCE	RAD	RADIUS		SIGN (EXISTING)
	FIRE HYDRANT	Ⓢ	MANHOLE	XX-X	SIGN NUMBER
F	FLARE		PED SIGNAL POLE (EXIST)		TRAFFIC FLOW
Ⓖ	GAS METER	●	PED SIGNAL POLE (PROP)		TRAF SIGNAL POLE (EXIST)
	GUY ANCHOR		POWER/ILLUMINATION POLE		TRAF SIGNAL POLE (PROP)
	HANDRAIL		PROPOSED ASPHALT PAVING	T	TRANSITION
L	LANDING		PROPOSED CONCRETE PAVING		TREE/BUSHES
	PROPOSED SMALL SIGN		PROPOSED SIDEWALK	Ⓦ	WATER METER

SIDEWALK LAYOUT

AT N 41ST ST

SHEET 17 OF 74

FED.RD. DIV.NO.	PROJECT ID.	HIGHWAY NO.
6	(SEE TITLE SHEET)	US 84

STATE	DIST.	COUNTY	SHEET NO.
TEXAS	WAC	MCLENNAN	75
CONT.	SECT.	JOB	
0055	15	072	

FILENAME: pw:\\kh-pw.bentley.com:kh-pw-01\Documents\01 Active Projects\TX-FTW-063586010 - US 84 (Waco Drive)\WAC 0055150724 - Design\Plan Set\3. Roadway\US84_RDW_SP17.dgn
PLOTTED: 12/21/2020

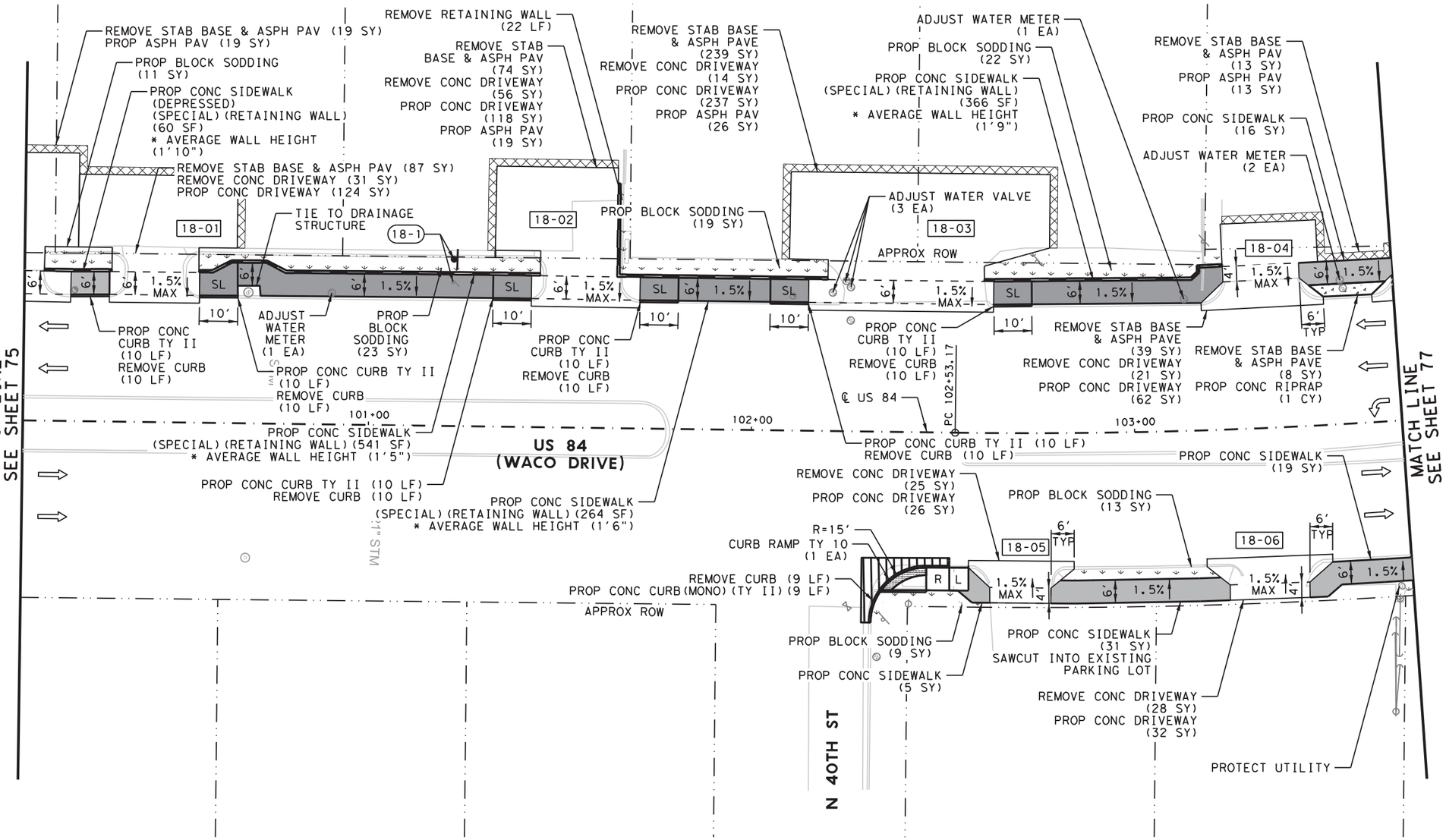

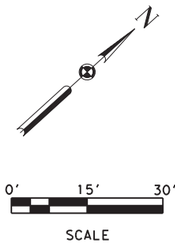

NOTES:

* FOR CONTRACTOR INFORMATION ONLY

1. LINEAR DIMENSIONS ARE TO THE BACK OF CURB.
2. RADII CALLOUTS ARE TO NOMINAL FACE OF CURB UNLESS NOTED OTHERWISE.
3. SIDEWALK CROSS SLOPE IS 1.5% USUAL. MAXIMUM ALLOWABLE CROSS SLOPE ON SIDEWALK IS 2.0%.
4. CONTRACTOR SHALL VERIFY ELEVATIONS AND DIMENSIONS IN THE FIELD PRIOR TO CONSTRUCTION.
5. THE INFORMATION SHOWN IN THESE PLANS CONCERNING TYPE AND LOCATION OF UTILITIES IS NOT GUARANTEED TO BE ACCURATE OR ALL INCLUSIVE. IT SHALL BE THE CONTRACTOR'S RESPONSIBILITY TO VERIFY AND LOCATE ALL EXISTING UTILITIES PRIOR TO CONSTRUCTION. THE CONTRACTOR WILL BE SOLELY RESPONSIBLE FOR ANY DAMAGES BY THEIR CONSTRUCTION OPERATIONS TO EXISTING UTILITIES.
6. REFER TO DRIVEWAY DETAILS, MISCELLANEOUS DETAILS, SIGNAL SHEETS, PAVEMENT MARKING SHEETS, SUMMARY OF SMALL SIGNS, AND TXDOT PED STANDARDS FOR ADDITIONAL INFORMATION.
7. PROPOSED SIGN LOCATIONS MAY BE ADJUSTED AS APPROVED BY THE ENGINEER.

03/01/2021

Kimley»Horn F-928

© 2021

Texas Department of Transportation

SPECIAL NOTES & DETAILS

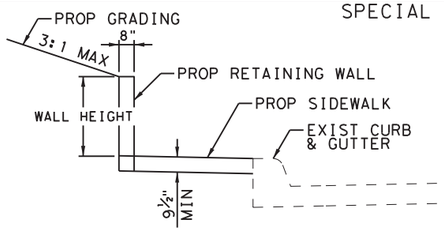

RETAINING WALL DETAIL

NTS

SEE CONCRETE SIDEWALK DETAILS FOR ADDITIONAL WALL AND SIDEWALK INFORMATION.

LEGEND

APPROX ROW	L1	LANDING COMMON	R	RAMP
ELECTRIC BOX/VAULT	LS	LEVEL SIDEWALK (2% MAX)		RIPRAP (CONC)
ES EXIST SIDEWALK	SL	LONGITUDINAL SLOPES MAY NOT EXCEED 5% & CROSS SLOPES MAY NOT EXCEED 2%		SAWCUT LINE
ER EXISTING RAMP				SIDEWALK WALL
FENCE	RAD	RADIUS		SIGN (EXISTING)
FIRE HYDRANT	Ⓢ	MANHOLE	XX-X	SIGN NUMBER
F FLARE		PED SIGNAL POLE (EXIST)		TRAFFIC FLOW
Ⓖ GAS METER	●	PED SIGNAL POLE (PROP)		TRAF SIGNAL POLE (EXIST)
GUY ANCHOR		POWER/ILLUMINATION POLE		TRAF SIGNAL POLE (PROP)
HANDRAIL		PROPOSED ASPHALT PAVING	T	TRANSITION
L LANDING		PROPOSED CONCRETE PAVING		TREE/BUSHES
PROPOSED SMALL SIGN		PROPOSED SIDEWALK	Ⓦ	WATER METER

SIDEWALK LAYOUT

AT N 40TH ST

SHEET 18 OF 74

FED.RD. DIV.NO.	PROJECT ID.	HIGHWAY NO.
6	(SEE TITLE SHEET)	US 84

STATE	DIST.	COUNTY	SHEET NO.
TEXAS	WAC	MCLENNAN	76
CONT.	SECT.	JOB	
0055	15	072	

FILENAME: pw:\\kh-pw.bentley.com:kh-pw-01\Documents\01 Active Projects\TX-FTW-063586010 - US 84 (Waco Drive)\WAC 0055150724 - Design\Plan Set\3. Roadway\US84_RDW_SP18.dgn
PLOTTED: 12/21/2020

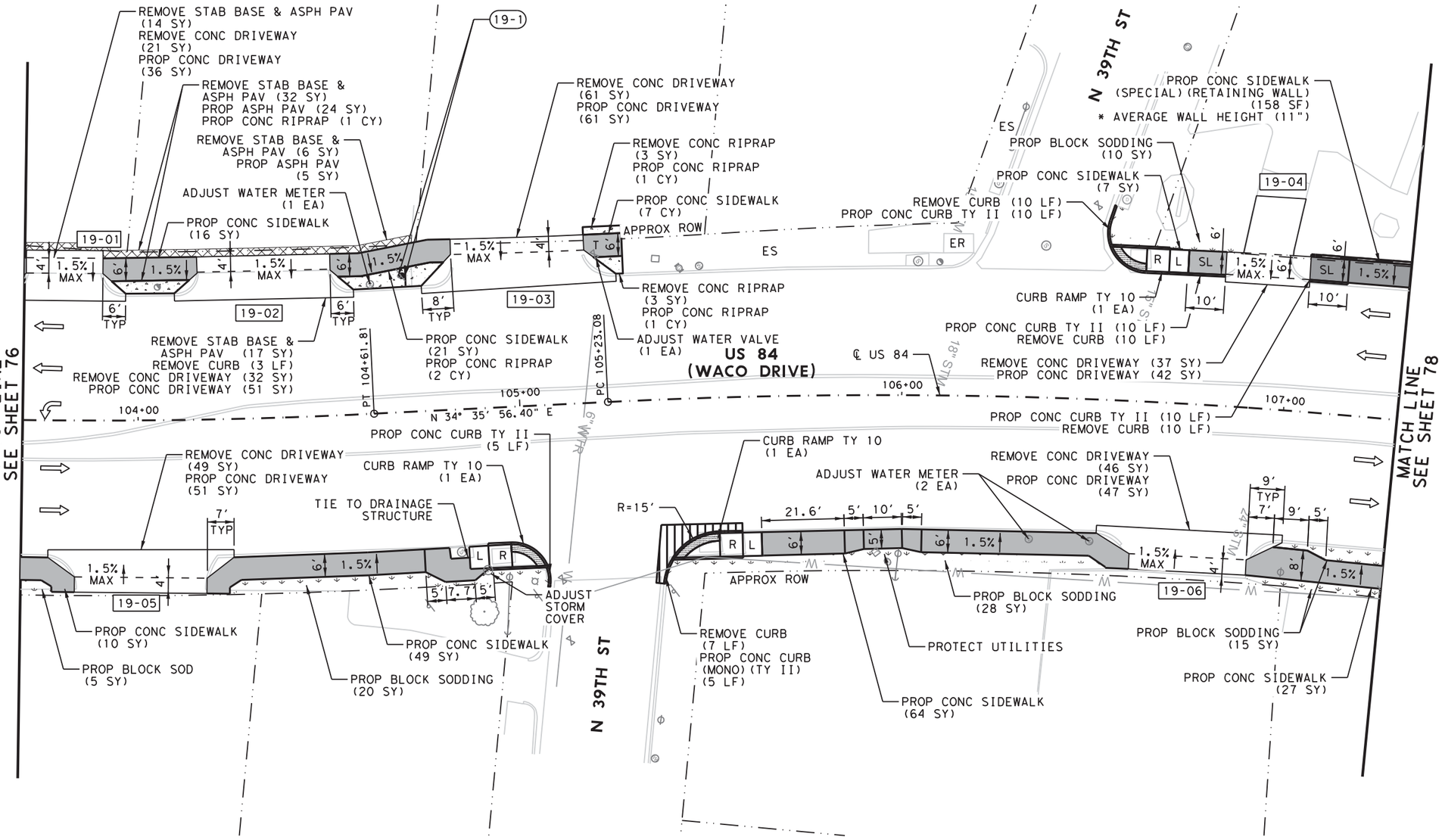

0' 15' 30'

SCALE

NOTES:

* FOR CONTRACTOR INFORMATION ONLY

1. LINEAR DIMENSIONS ARE TO THE BACK OF CURB.
2. RADII CALLOUTS ARE TO NOMINAL FACE OF CURB UNLESS NOTED OTHERWISE.
3. SIDEWALK CROSS SLOPE IS 1.5% USUAL. MAXIMUM ALLOWABLE CROSS SLOPE ON SIDEWALK IS 2.0%.
4. CONTRACTOR SHALL VERIFY ELEVATIONS AND DIMENSIONS IN THE FIELD PRIOR TO CONSTRUCTION.
5. THE INFORMATION SHOWN IN THESE PLANS CONCERNING TYPE AND LOCATION OF UTILITIES IS NOT GUARANTEED TO BE ACCURATE OR ALL INCLUSIVE. IT SHALL BE THE CONTRACTOR'S RESPONSIBILITY TO VERIFY AND LOCATE ALL EXISTING UTILITIES PRIOR TO CONSTRUCTION. THE CONTRACTOR WILL BE SOLELY RESPONSIBLE FOR ANY DAMAGES BY THEIR CONSTRUCTION OPERATIONS TO EXISTING UTILITIES.
6. REFER TO DRIVEWAY DETAILS, MISCELLANEOUS DETAILS, SIGNAL SHEETS, PAVEMENT MARKING SHEETS, SUMMARY OF SMALL SIGNS, AND TXDOT PED STANDARDS FOR ADDITIONAL INFORMATION.
7. PROPOSED SIGN LOCATIONS MAY BE ADJUSTED AS APPROVED BY THE ENGINEER.

STATE OF TEXAS — JAMES RUTH — 103231 — LICENSED PROFESSIONAL ENGINEER

03/01/2021

Kimley»Horn F-928

© 2021

Texas Department of Transportation

SPECIAL NOTES & DETAILS

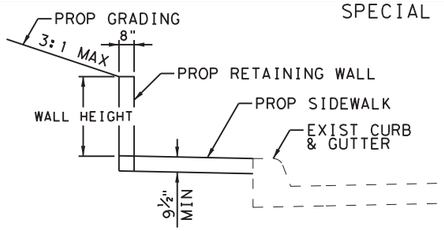

RETAINING WALL DETAIL

NTS

SEE CONCRETE SIDEWALK DETAILS FOR ADDITIONAL WALL AND SIDEWALK INFORMATION.

LEGEND

APPROX ROW	L1	LANDING COMMON	R	RAMP
ELECTRIC BOX/VAULT	LS	LEVEL SIDEWALK (2% MAX)	RIPRAP (CONC)	
ES	EXIST SIDEWALK	SL	LONGITUDINAL SLOPES MAY NOT EXCEED 5% & CROSS SLOPES MAY NOT EXCEED 2%	SAWCUT LINE	
ER	EXISTING RAMP			SIDEWALK WALL	
FENCE	RAD	RADIUS	SIGN (EXISTING)	
FIRE HYDRANT	MANHOLE	SIGN NUMBER	
F	FLARE	PED SIGNAL POLE (EXIST)	TRAFFIC FLOW	
GAS METER	PED SIGNAL POLE (PROP)	TRAF SIGNAL POLE (EXIST)	
GUY ANCHOR	POWER/ILLUMINATION POLE	TRAF SIGNAL POLE (PROP)	
HANDRAIL	PROPOSED ASPHALT PAVING	T	TRANSITION
L	LANDING	PROPOSED CONCRETE PAVING	TREE/BUSHES	
PROPOSED SMALL SIGN	PROPOSED SIDEWALK	WATER METER	

SIDEWALK LAYOUT

AT N 39TH ST

SHEET 19 OF 74

FED. RD. DIV. NO.	PROJECT ID.	HIGHWAY NO.
6	(SEE TITLE SHEET)	US 84

STATE	DIST.	COUNTY	SHEET NO.
TEXAS	WAC	MCLENNAN	77
CONT.	SECT.	JOB	
0055	15	072	

FILENAME: pw:\\kh-pw.bentley.com:kh-pw-01\Documents\01 Active Projects\TX-FTW-063586010 - US 84 (Waco Drive)\WAC 0055150724 - Design\Plan Set\3. Roadway\US84_RDW_SP19.dgn
PLOTTED: 12/21/2020

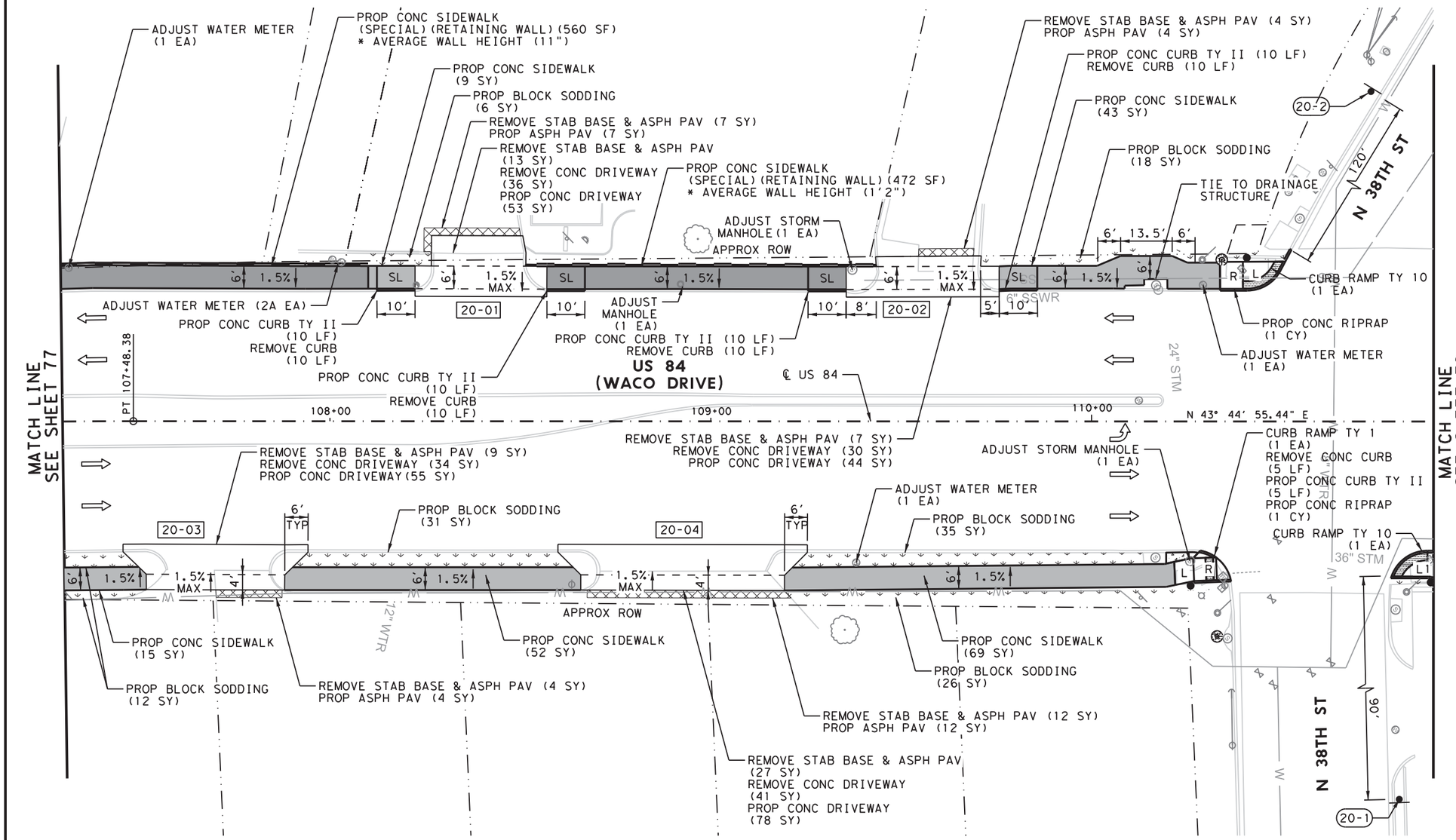

0' 15' 30'

SCALE

NOTES:

* FOR CONTRACTOR INFORMATION ONLY

1. LINEAR DIMENSIONS ARE TO THE BACK OF CURB.
2. RADII CALLOUTS ARE TO NOMINAL FACE OF CURB UNLESS NOTED OTHERWISE.
3. SIDEWALK CROSS SLOPE IS 1.5% USUAL. MAXIMUM ALLOWABLE CROSS SLOPE ON SIDEWALK IS 2.0%.
4. CONTRACTOR SHALL VERIFY ELEVATIONS AND DIMENSIONS IN THE FIELD PRIOR TO CONSTRUCTION.
5. THE INFORMATION SHOWN IN THESE PLANS CONCERNING TYPE AND LOCATION OF UTILITIES IS NOT GUARANTEED TO BE ACCURATE OR ALL INCLUSIVE. IT SHALL BE THE CONTRACTOR'S RESPONSIBILITY TO VERIFY AND LOCATE ALL EXISTING UTILITIES PRIOR TO CONSTRUCTION. THE CONTRACTOR WILL BE SOLELY RESPONSIBLE FOR ANY DAMAGES BY THEIR CONSTRUCTION OPERATIONS TO EXISTING UTILITIES.
6. REFER TO DRIVEWAY DETAILS, MISCELLANEOUS DETAILS, SIGNAL SHEETS, PAVEMENT MARKING SHEETS, SUMMARY OF SMALL SIGNS, AND TXDOT PED STANDARDS FOR ADDITIONAL INFORMATION.
7. PROPOSED SIGN LOCATIONS MAY BE ADJUSTED AS APPROVED BY THE ENGINEER.

STATE OF TEXAS — AMY RUTHART — 129231 — LICENSED PROFESSIONAL ENGINEER

03/01/2021

Kimley»Horn F-928

© 2021

Texas Department of Transportation

SPECIAL NOTES & DETAILS

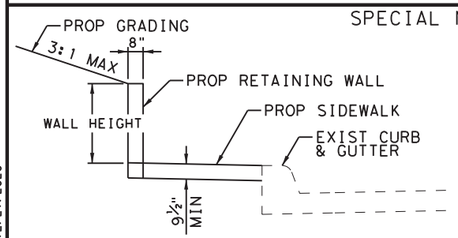

RETAINING WALL DETAIL

NTS

SEE CONCRETE SIDEWALK DETAILS FOR ADDITIONAL WALL AND SIDEWALK INFORMATION.

LEGEND

APPROX ROW	L1	LANDING COMMON	R	RAMP
ELECTRIC BOX/VAULT	LS	LEVEL SIDEWALK (2% MAX)		RIPRAP (CONC)
ES EXIST SIDEWALK	SL	LONGITUDINAL SLOPES MAY NOT EXCEED 5% & CROSS SLOPES MAY NOT EXCEED 2%		SAWCUT LINE
ER EXISTING RAMP				SIDEWALK WALL
FENCE	RAD	RADIUS		SIGN (EXISTING)
FIRE HYDRANT	Ⓢ	MANHOLE	XX-X	SIGN NUMBER
F FLARE		PED SIGNAL POLE (EXIST)		TRAFFIC FLOW
Ⓖ GAS METER	●	PED SIGNAL POLE (PROP)		TRAF SIGNAL POLE (EXIST)
GUY ANCHOR	ϕ	POWER/ILLUMINATION POLE		TRAF SIGNAL POLE (PROP)
HANDRAIL		PROPOSED ASPHALT PAVING	T	TRANSITION
L LANDING		PROPOSED CONCRETE PAVING		TREE/BUSHES
PROPOSED SMALL SIGN		PROPOSED SIDEWALK	Ⓦ	WATER METER

SIDEWALK LAYOUT

AT N 38TH ST

SHEET 20 OF 74

FED.RD. DIV.NO.	PROJECT ID.	HIGHWAY NO.
6	(SEE TITLE SHEET)	US 84

STATE	DIST.	COUNTY	SHEET NO.
TEXAS	WAC	MCLENNAN	78
CONT.	SECT.	JOB	
0055	15	072	

FILENAME: pw:\\kh-pw.bentley.com:kh-pw-01\Documents\01 Active Projects\TX-FTW-063586010 - US 84 (Waco Drive)\WAC 0055150724 - Design\Plan Set\3. Roadway\US84_RDW_SP20.dgn
PLOTTED: 12/21/2020

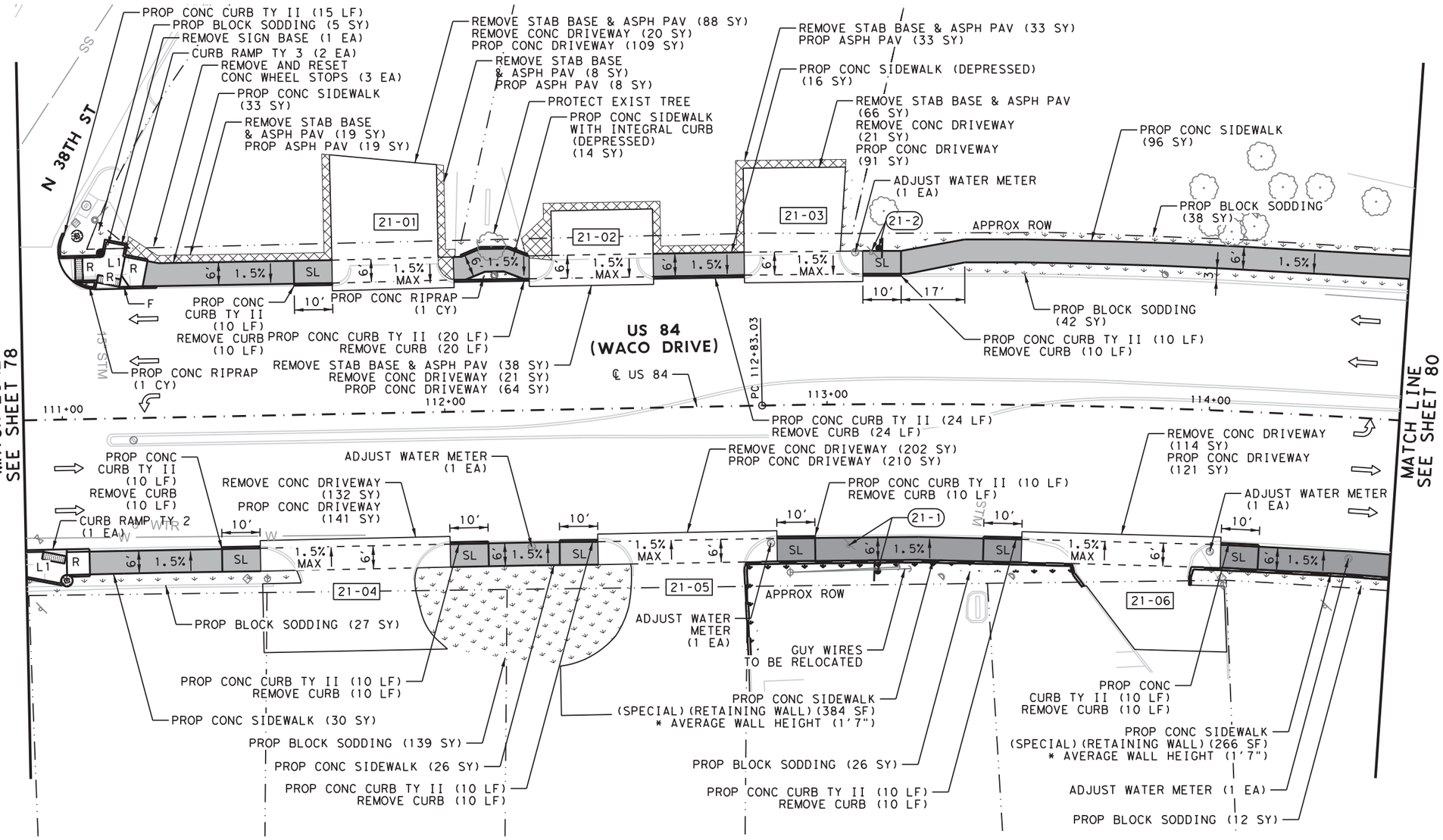

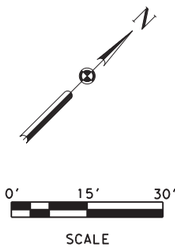

NOTES:

* FOR CONTRACTOR INFORMATION ONLY

1. LINEAR DIMENSIONS ARE TO THE BACK OF CURB.
2. RADII CALLOUTS ARE TO NOMINAL FACE OF CURB UNLESS NOTED OTHERWISE.
3. SIDEWALK CROSS SLOPE IS 1.5% USUAL. MAXIMUM ALLOWABLE CROSS SLOPE ON SIDEWALK IS 2.0%.
4. CONTRACTOR SHALL VERIFY ELEVATIONS AND DIMENSIONS IN THE FIELD PRIOR TO CONSTRUCTION.
5. THE INFORMATION SHOWN IN THESE PLANS CONCERNING TYPE AND LOCATION OF UTILITIES IS NOT GUARANTEED TO BE ACCURATE OR ALL INCLUSIVE. IT SHALL BE THE CONTRACTOR'S RESPONSIBILITY TO VERIFY AND LOCATE ALL EXISTING UTILITIES PRIOR TO CONSTRUCTION. THE CONTRACTOR WILL BE SOLELY RESPONSIBLE FOR ANY DAMAGES BY THEIR CONSTRUCTION OPERATIONS TO EXISTING UTILITIES.
6. REFER TO DRIVEWAY DETAILS, MISCELLANEOUS DETAILS, SIGNAL SHEETS, PAVEMENT MARKING SHEETS, SUMMARY OF SMALL SIGNS, AND TXDOT PED STANDARDS FOR ADDITIONAL INFORMATION.
7. PROPOSED SIGN LOCATIONS MAY BE ADJUSTED AS APPROVED BY THE ENGINEER.

03/01/2021

Kimley»Horn F-928

© 2021

Texas Department of Transportation

SPECIAL NOTES & DETAILS

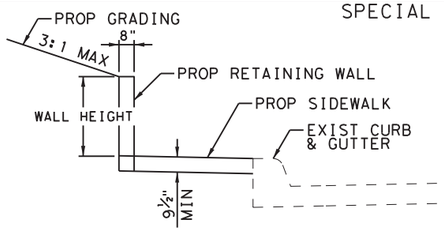

RETAINING WALL DETAIL
NTS

SEE CONCRETE SIDEWALK DETAILS FOR ADDITIONAL WALL AND SIDEWALK INFORMATION.

LEGEND

APPROX ROW	L1	LANDING COMMON	R	RAMP
ELECTRIC BOX/VAULT	LS	LEVEL SIDEWALK (2% MAX)	RIPRAP (CONC)
ES	EXIST SIDEWALK	SL	LONGITUDINAL SLOPES MAY NOT EXCEED 5% & CROSS SLOPES MAY NOT EXCEED 2%	SAWCUT LINE
ER	EXISTING RAMP			SIDEWALK WALL
FENCE	RAD	RADIUS	SIGN (EXISTING)
FIRE HYDRANT	MANHOLE	XX-X	SIGN NUMBER
F	FLARE	PED SIGNAL POLE (EXIST)	TRAFFIC FLOW
G	GAS METER	PED SIGNAL POLE (PROP)	TRAF SIGNAL POLE (EXIST)
GUY ANCHOR	POWER/ILLUMINATION POLE	TRAF SIGNAL POLE (PROP)
HANDRAIL	PROPOSED ASPHALT PAVING	T	TRANSITION
L	LANDING	PROPOSED CONCRETE PAVING	TREE/BUSHES
PROPOSED SMALL SIGN	PROPOSED SIDEWALK	W	WATER METER

SIDEWALK LAYOUT

BETWEEN N 38TH ST AND N 37TH ST

SHEET 21 OF 74

FED. RD. DIV. NO.	PROJECT ID.	HIGHWAY NO.
6	(SEE TITLE SHEET)	US 84

STATE	DIST.	COUNTY	SHEET NO.
TEXAS	WAC	MCLENNAN	79
CONT.	SECT.	JOB	
0055	15	072	

FILENAME: pw:\\KH-pw.bentley.com:kh-pw-01\Documents\01 Active Projects\TX-FTW-063586010 - US 84 (Waco Drive)\WAC 0055150721\4 - Design\Plan Set\3. Roadway\US84_RDW_SP21.dgn
PLOTTED: 12/21/2020

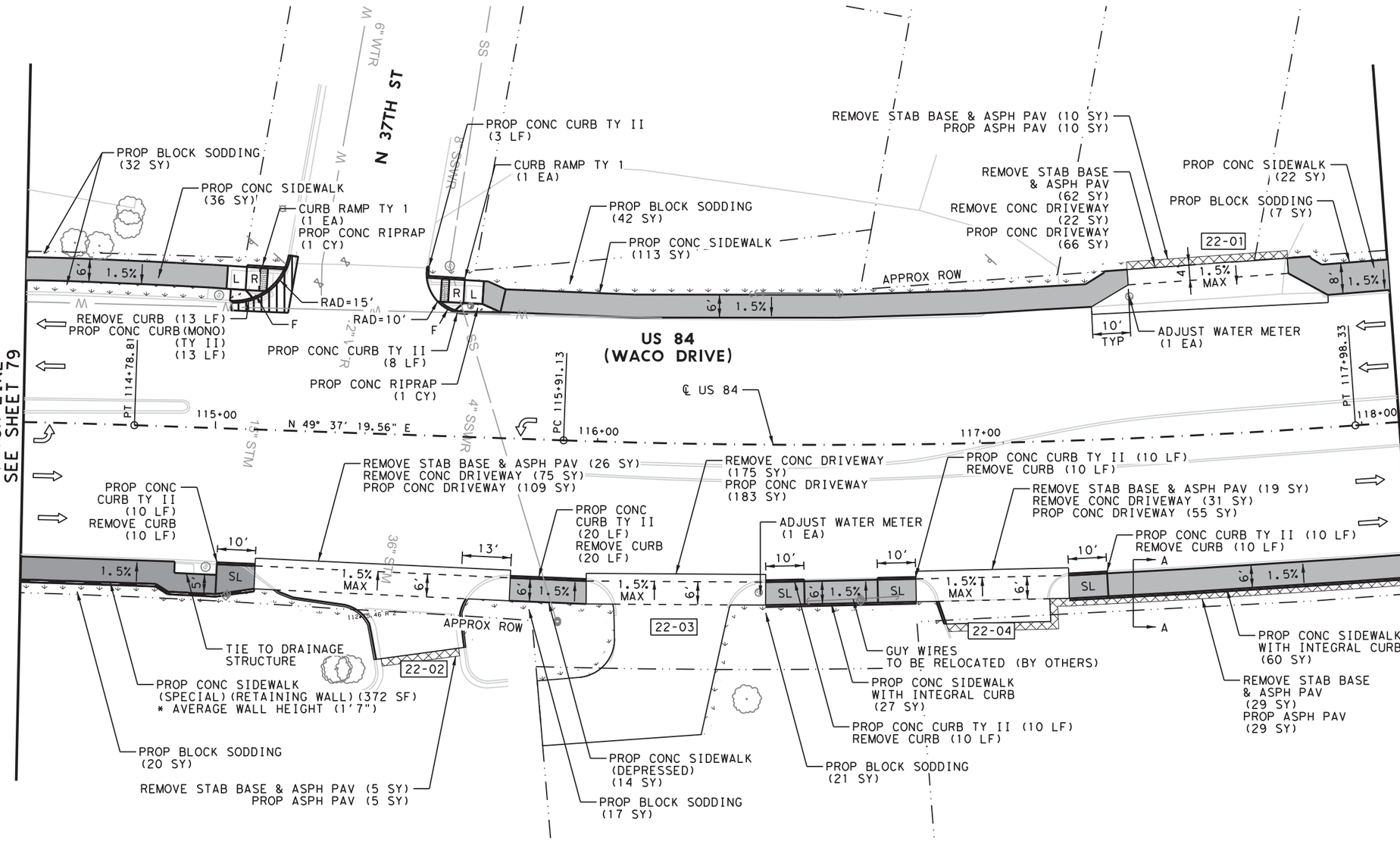

0' 15' 30'

SCALE

NOTES:

* FOR CONTRACTOR INFORMATION ONLY

1. LINEAR DIMENSIONS ARE TO THE BACK OF CURB.
2. RADII CALLOUTS ARE TO NOMINAL FACE OF CURB UNLESS NOTED OTHERWISE.
3. SIDEWALK CROSS SLOPE IS 1.5% USUAL. MAXIMUM ALLOWABLE CROSS SLOPE ON SIDEWALK IS 2.0%.
4. CONTRACTOR SHALL VERIFY ELEVATIONS AND DIMENSIONS IN THE FIELD PRIOR TO CONSTRUCTION.
5. THE INFORMATION SHOWN IN THESE PLANS CONCERNING TYPE AND LOCATION OF UTILITIES IS NOT GUARANTEED TO BE ACCURATE OR ALL INCLUSIVE. IT SHALL BE THE CONTRACTOR'S RESPONSIBILITY TO VERIFY AND LOCATE ALL EXISTING UTILITIES PRIOR TO CONSTRUCTION. THE CONTRACTOR WILL BE SOLELY RESPONSIBLE FOR ANY DAMAGES BY THEIR CONSTRUCTION OPERATIONS TO EXISTING UTILITIES.
6. REFER TO DRIVEWAY DETAILS, MISCELLANEOUS DETAILS, SIGNAL SHEETS, PAVEMENT MARKING SHEETS, SUMMARY OF SMALL SIGNS, AND TXDOT PED STANDARDS FOR ADDITIONAL INFORMATION.
7. PROPOSED SIGN LOCATIONS MAY BE ADJUSTED AS APPROVED BY THE ENGINEER.

STATE OF TEXAS — JOHN RUTH — 96501 — LICENSED PROFESSIONAL ENGINEER

03/01/2021

Kimley»Horn F-928

© 2021

Texas Department of Transportation

SPECIAL NOTES & DETAILS

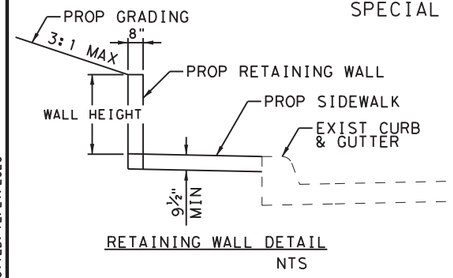

RETAINING WALL DETAIL

NTS

SEE CONCRETE SIDEWALK DETAILS FOR ADDITIONAL WALL AND SIDEWALK INFORMATION.

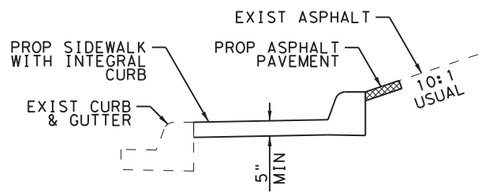

SECTION A-A

LEGEND

APPROX ROW	L1	LANDING COMMON	R	RAMP	
ELECTRIC BOX/VAULT	LS	LEVEL SIDEWALK (2% MAX)		RIPRAP (CONC)	
ES EXIST SIDEWALK	SL	LONGITUDINAL SLOPES MAY NOT EXCEED 5% & CROSS SLOPES MAY NOT EXCEED 2%		SAWCUT LINE	
ER EXISTING RAMP				SIDEWALK WALL	
FENCE	RAD	RADIUS		SIGN (EXISTING)	
FIRE HYDRANT	Ⓢ	MANHOLE	XX-X	SIGN NUMBER	
F FLARE		PED SIGNAL POLE (EXIST)		TRAFFIC FLOW	
Ⓖ GAS METER	●	PED SIGNAL POLE (PROP)		TRAF SIGNAL POLE (EXIST)	
GUY ANCHOR		POWER/ILLUMINATION POLE		TRAF SIGNAL POLE (PROP)	
HANDRAIL		PROPOSED ASPHALT PAVING	T	TRANSITION	
L LANDING		PROPOSED CONCRETE PAVING		TREE/BUSHES	
PROPOSED SMALL SIGN		PROPOSED SIDEWALK	Ⓦ	WATER METER	

SIDEWALK LAYOUT

AT N 37TH ST

SHEET 22 OF 74

FED.RD. DIV.NO.	PROJECT ID.	HIGHWAY NO.
6	(SEE TITLE SHEET)	US 84

STATE	DIST.	COUNTY	SHEET NO.
TEXAS	WAC	MCLENNAN	80
CONT.	SECT.	JOB	
0055	15	072	

FILENAME: pw:\\kh-pw.bentley.com:kh-pw-01\Documents\01 Active Projects\TX-FTW-063586010 - US 84 (Waco Drive)\WAC 0055150724 - Design\Plan Set\3. Roadway\US84_RDW_SP22.dgn
PLOTTED: 12/21/2020

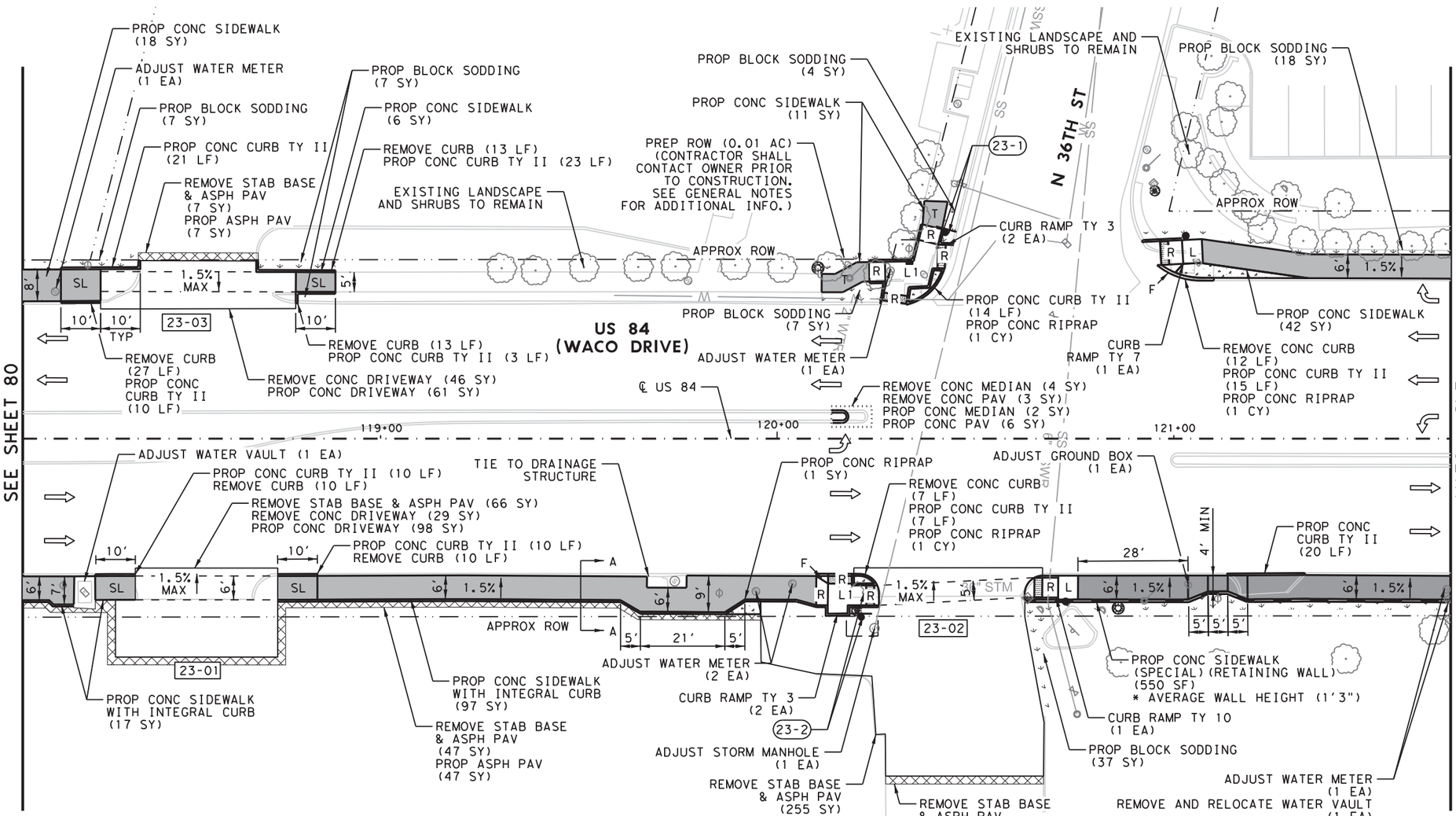

NOTES:

* FOR CONTRACTOR INFORMATION ONLY

1. LINEAR DIMENSIONS ARE TO THE BACK OF CURB.
2. RADII CALLOUTS ARE TO NOMINAL FACE OF CURB UNLESS NOTED OTHERWISE.
3. SIDEWALK CROSS SLOPE IS 1.5% USUAL. MAXIMUM ALLOWABLE CROSS SLOPE ON SIDEWALK IS 2.0%.
4. CONTRACTOR SHALL VERIFY ELEVATIONS AND DIMENSIONS IN THE FIELD PRIOR TO CONSTRUCTION.
5. THE INFORMATION SHOWN IN THESE PLANS CONCERNING TYPE AND LOCATION OF UTILITIES IS NOT GUARANTEED TO BE ACCURATE OR ALL INCLUSIVE. IT SHALL BE THE CONTRACTOR'S RESPONSIBILITY TO VERIFY AND LOCATE ALL EXISTING UTILITIES PRIOR TO CONSTRUCTION. THE CONTRACTOR WILL BE SOLELY RESPONSIBLE FOR ANY DAMAGES BY THEIR CONSTRUCTION OPERATIONS TO EXISTING UTILITIES.
6. REFER TO DRIVEWAY DETAILS, MISCELLANEOUS DETAILS, SIGNAL SHEETS, PAVEMENT MARKING SHEETS, SUMMARY OF SMALL SIGNS, AND TXDOT PED STANDARDS FOR ADDITIONAL INFORMATION.
7. PROPOSED SIGN LOCATIONS MAY BE ADJUSTED AS APPROVED BY THE ENGINEER.

03/01/2021

Kimley»Horn F-928

© 2021

Texas Department of Transportation

SPECIAL NOTES & DETAILS

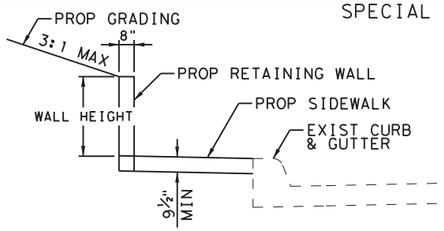

RETAINING WALL DETAIL

NTS

SEE CONCRETE SIDEWALK DETAILS FOR ADDITIONAL WALL AND SIDEWALK INFORMATION.

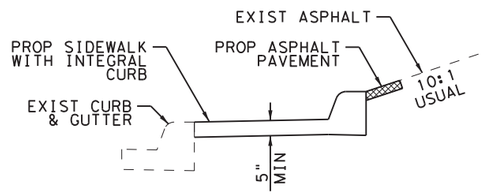

SECTION A-A

LEGEND

APPROX ROW	L1	LANDING COMMON	R	RAMP
ELECTRIC BOX/VAULT	LS	LEVEL SIDEWALK (2% MAX)		RIPRAP (CONC)
ES EXIST SIDEWALK	SL	LONGITUDINAL SLOPES MAY NOT EXCEED 5% & CROSS SLOPES MAY NOT EXCEED 2%		SAWCUT LINE
ER EXISTING RAMP				SIDEWALK WALL
FENCE	RAD	RADIUS		SIGN (EXISTING)
FIRE HYDRANT	Ⓢ	MANHOLE	XX-X	SIGN NUMBER
F FLARE		PED SIGNAL POLE (EXIST)		TRAFFIC FLOW
Ⓖ GAS METER	●	PED SIGNAL POLE (PROP)		TRAF SIGNAL POLE (EXIST)
GUY ANCHOR	ϕ	POWER/ILLUMINATION POLE		TRAF SIGNAL POLE (PROP)
HANDRAIL		PROPOSED ASPHALT PAVING	T	TRANSITION
L LANDING		PROPOSED CONCRETE PAVING		TREE/BUSHES
PROPOSED SMALL SIGN		PROPOSED SIDEWALK	Ⓦ	WATER METER

SIDEWALK LAYOUT

AT N 36TH ST

SHEET 23 OF 74

FED.RD. DIV.NO.	PROJECT ID.	HIGHWAY NO.
6	(SEE TITLE SHEET)	US 84

STATE	DIST.	COUNTY	SHEET NO.
TEXAS	WAC	MCLENNAN	81
CONT.	SECT.	JOB	
0055	15	072	

FILENAME: pw:\\kh-pw.bentley.com:kh-pw-01\Documents\01 Active Projects\TX-FTW-063586010 - US 84 (Waco Drive)\WAC 0055150724 - Design\Plan Set\3. Roadway\US84_RDW_SP23.dgn
PLOTTED: 12/21/2020

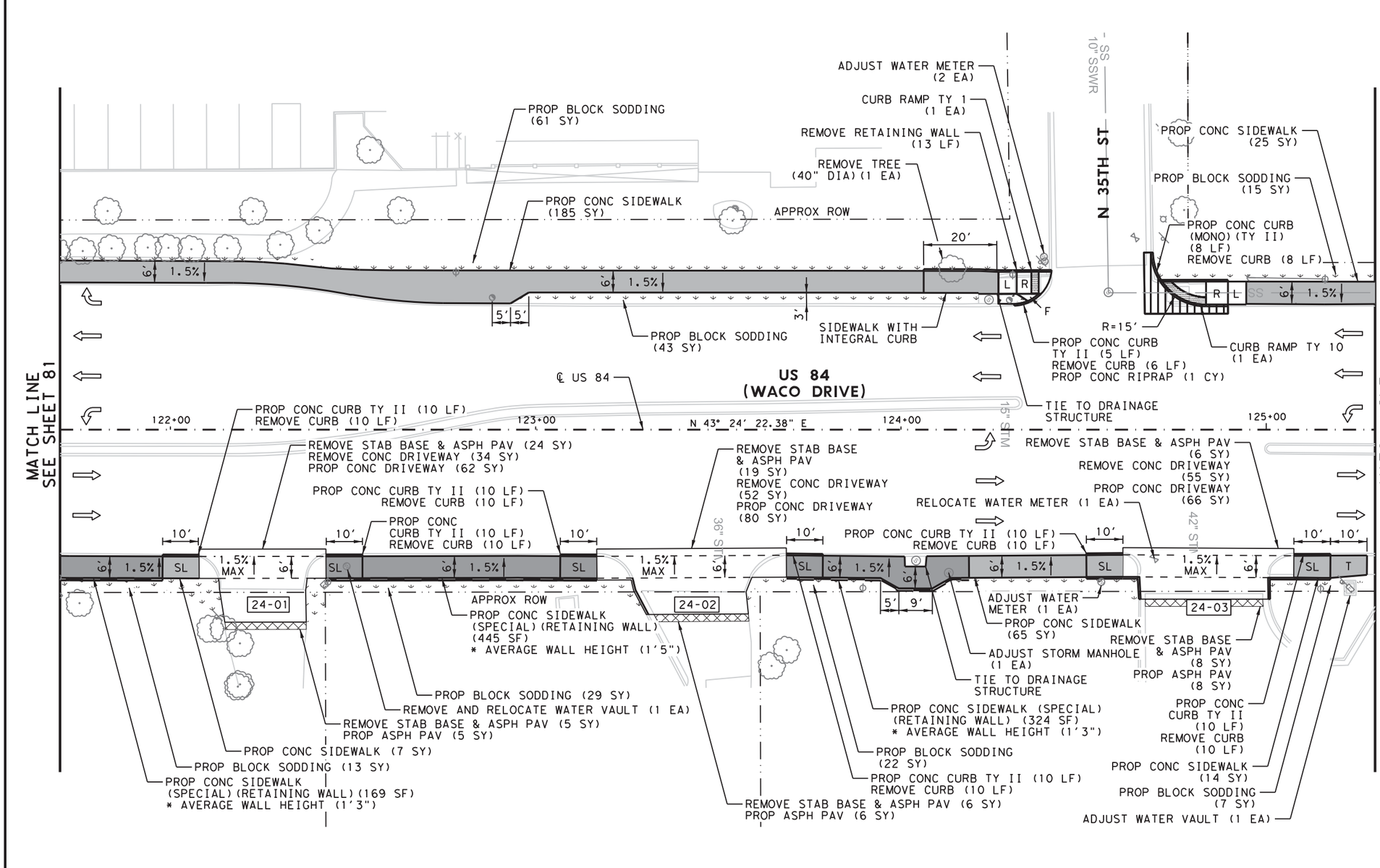

0' 15' 30'

SCALE

NOTES:

* FOR CONTRACTOR INFORMATION ONLY

1. LINEAR DIMENSIONS ARE TO THE BACK OF CURB.
2. RADII CALLOUTS ARE TO NOMINAL FACE OF CURB UNLESS NOTED OTHERWISE.
3. SIDEWALK CROSS SLOPE IS 1.5% USUAL. MAXIMUM ALLOWABLE CROSS SLOPE ON SIDEWALK IS 2.0%.
4. CONTRACTOR SHALL VERIFY ELEVATIONS AND DIMENSIONS IN THE FIELD PRIOR TO CONSTRUCTION.
5. THE INFORMATION SHOWN IN THESE PLANS CONCERNING TYPE AND LOCATION OF UTILITIES IS NOT GUARANTEED TO BE ACCURATE OR ALL INCLUSIVE. IT SHALL BE THE CONTRACTOR'S RESPONSIBILITY TO VERIFY AND LOCATE ALL EXISTING UTILITIES PRIOR TO CONSTRUCTION. THE CONTRACTOR WILL BE SOLELY RESPONSIBLE FOR ANY DAMAGES BY THEIR CONSTRUCTION OPERATIONS TO EXISTING UTILITIES.
6. REFER TO DRIVEWAY DETAILS, MISCELLANEOUS DETAILS, SIGNAL SHEETS, PAVEMENT MARKING SHEETS, SUMMARY OF SMALL SIGNS, AND TXDOT PED STANDARDS FOR ADDITIONAL INFORMATION.
7. PROPOSED SIGN LOCATIONS MAY BE ADJUSTED AS APPROVED BY THE ENGINEER.

03/01/2021

Kimley»Horn F-928

© 2021

Texas Department of Transportation

SPECIAL NOTES & DETAILS

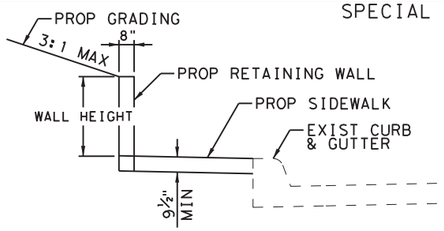

RETAINING WALL DETAIL

NTS

SEE CONCRETE SIDEWALK DETAILS FOR ADDITIONAL WALL AND SIDEWALK INFORMATION.

LEGEND

APPROX ROW	L1	LANDING COMMON	R	RAMP
ELECTRIC BOX/VAULT	LS	LEVEL SIDEWALK (2% MAX)	RIPRAP (CONC)
ES	EXIST SIDEWALK	SL	LONGITUDINAL SLOPES MAY NOT EXCEED 5% & CROSS SLOPES MAY NOT EXCEED 2%	SAWCUT LINE
ER	EXISTING RAMP			SIDEWALK WALL
FENCE	RAD	RADIUS	SIGN (EXISTING)
FIRE HYDRANT	Ⓢ	MANHOLE	XX-X	SIGN NUMBER
F	FLARE		PED SIGNAL POLE (EXIST)		TRAFFIC FLOW
Ⓖ	GAS METER	●	PED SIGNAL POLE (PROP)		TRAF SIGNAL POLE (EXIST)
GUY ANCHOR		POWER/ILLUMINATION POLE		TRAF SIGNAL POLE (PROP)
HANDRAIL		PROPOSED ASPHALT PAVING	T	TRANSITION
L	LANDING		PROPOSED CONCRETE PAVING		TREE/BUSHES
PROPOSED SMALL SIGN		PROPOSED SIDEWALK	Ⓦ	WATER METER

SIDEWALK LAYOUT

AT N 35TH ST

SHEET 24 OF 74

FED. RD. DIV. NO.	PROJECT ID.	HIGHWAY NO.
6	(SEE TITLE SHEET)	US 84

STATE	DIST.	COUNTY	SHEET NO.
TEXAS	WAC	MCLENNAN	82
CONT.	SECT.	JOB	
0055	15	072	

FILENAME: pw:\\kh-pw.bentley.com:kh-pw-01\Documents\01 Active Projects\TX-FTW-063586010 - US 84 (Waco Drive)\WAC 005515072\4 - Design\Plan Set\3. Roadway\US84_RDW_SP24.dgn
PLOTTED: 12/21/2020

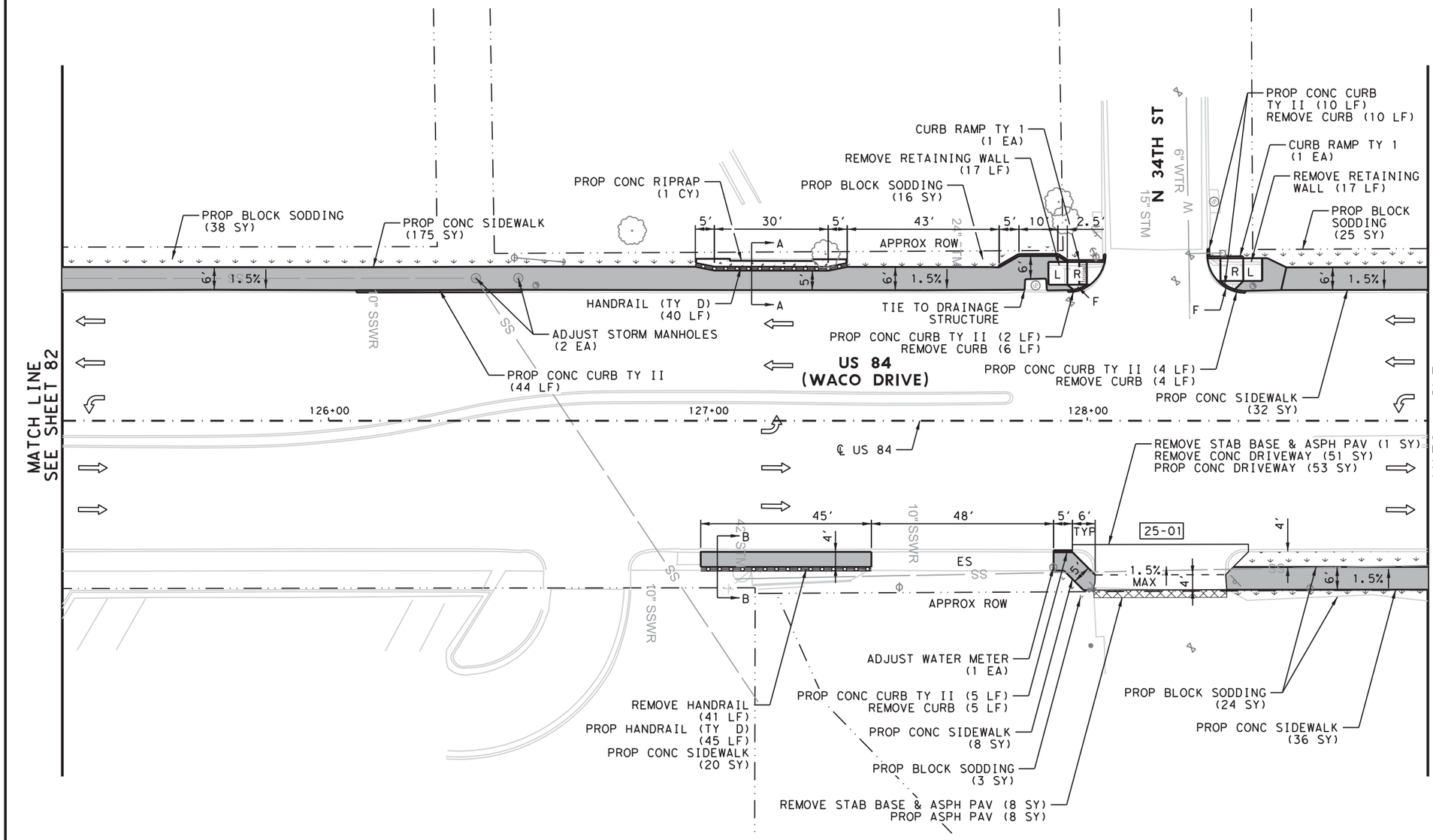

0′ 15′ 30′

SCALE

NOTES:

* FOR CONTRACTOR INFORMATION ONLY

1. LINEAR DIMENSIONS ARE TO THE BACK OF CURB.
2. RADII CALLOUTS ARE TO NOMINAL FACE OF CURB UNLESS NOTED OTHERWISE.
3. SIDEWALK CROSS SLOPE IS 1.5% USUAL. MAXIMUM ALLOWABLE CROSS SLOPE ON SIDEWALK IS 2.0%.
4. CONTRACTOR SHALL VERIFY ELEVATIONS AND DIMENSIONS IN THE FIELD PRIOR TO CONSTRUCTION.
5. THE INFORMATION SHOWN IN THESE PLANS CONCERNING TYPE AND LOCATION OF UTILITIES IS NOT GUARANTEED TO BE ACCURATE OR ALL INCLUSIVE. IT SHALL BE THE CONTRACTOR'S RESPONSIBILITY TO VERIFY AND LOCATE ALL EXISTING UTILITIES PRIOR TO CONSTRUCTION. THE CONTRACTOR WILL BE SOLELY RESPONSIBLE FOR ANY DAMAGES BY THEIR CONSTRUCTION OPERATIONS TO EXISTING UTILITIES.
6. REFER TO DRIVEWAY DETAILS, MISCELLANEOUS DETAILS, SIGNAL SHEETS, PAVEMENT MARKING SHEETS, SUMMARY OF SMALL SIGNS, AND TXDOT PED STANDARDS FOR ADDITIONAL INFORMATION.
7. PROPOSED SIGN LOCATIONS MAY BE ADJUSTED AS APPROVED BY THE ENGINEER.

03/01/2021

Kimley»Horn F-928

© 2021

Texas Department of Transportation

SPECIAL NOTES & DETAILS

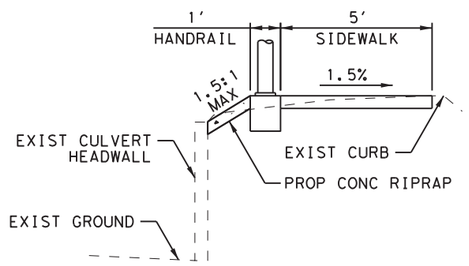

SECTION A-A

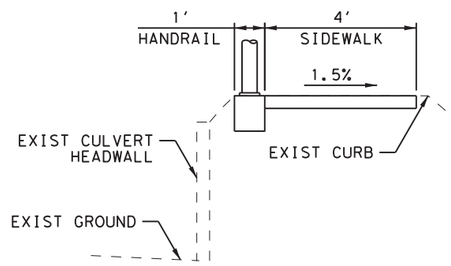

SECTION B-B

LEGEND

APPROX ROW	L1	LANDING COMMON	R	RAMP
ELECTRIC BOX/VAULT	LS	LEVEL SIDEWALK (2% MAX)		RIPRAP (CONC)
ES	EXIST SIDEWALK	SL	LONGITUDINAL SLOPES MAY NOT EXCEED 5% & CROSS SLOPES MAY NOT EXCEED 2%		SAWCUT LINE
ER	EXISTING RAMP				SIDEWALK WALL
FENCE	RAD	RADIUS		SIGN (EXISTING)
FIRE HYDRANT	Ⓢ	MANHOLE	XX-X	SIGN NUMBER
F	FLARE		PED SIGNAL POLE (EXIST)		TRAFFIC FLOW
Ⓖ	GAS METER		PED SIGNAL POLE (PROP)		TRAF SIGNAL POLE (EXIST)
GUY ANCHOR		POWER/ILLUMINATION POLE		TRAF SIGNAL POLE (PROP)
HANDRAIL		PROPOSED ASPHALT PAVING	T	TRANSITION
L	LANDING		PROPOSED CONCRETE PAVING		TREE/BUSHES
PROPOSED SMALL SIGN		PROPOSED SIDEWALK	Ⓦ	WATER METER

SIDEWALK LAYOUT

AT N 34TH ST

SHEET 25 OF 74

FED. RD. DIV. NO.	PROJECT ID.	HIGHWAY NO.
6	(SEE TITLE SHEET)	US 84

STATE	DIST.	COUNTY	SHEET NO.
TEXAS	WAC	MCLENNAN	83
CONT.	SECT.	JOB	
0055	15	072	

FILENAME: pw:\\kh-pw.bentley.com:kh-pw-01\Documents\01 Active Projects\TX-FTW-063586010 - US 84 (Waco Drive)\WAC 0055150724 - Design\Plan Set\3. Roadway\US84_RDW_SP25.dgn
PLOTTED: 12/21/2020

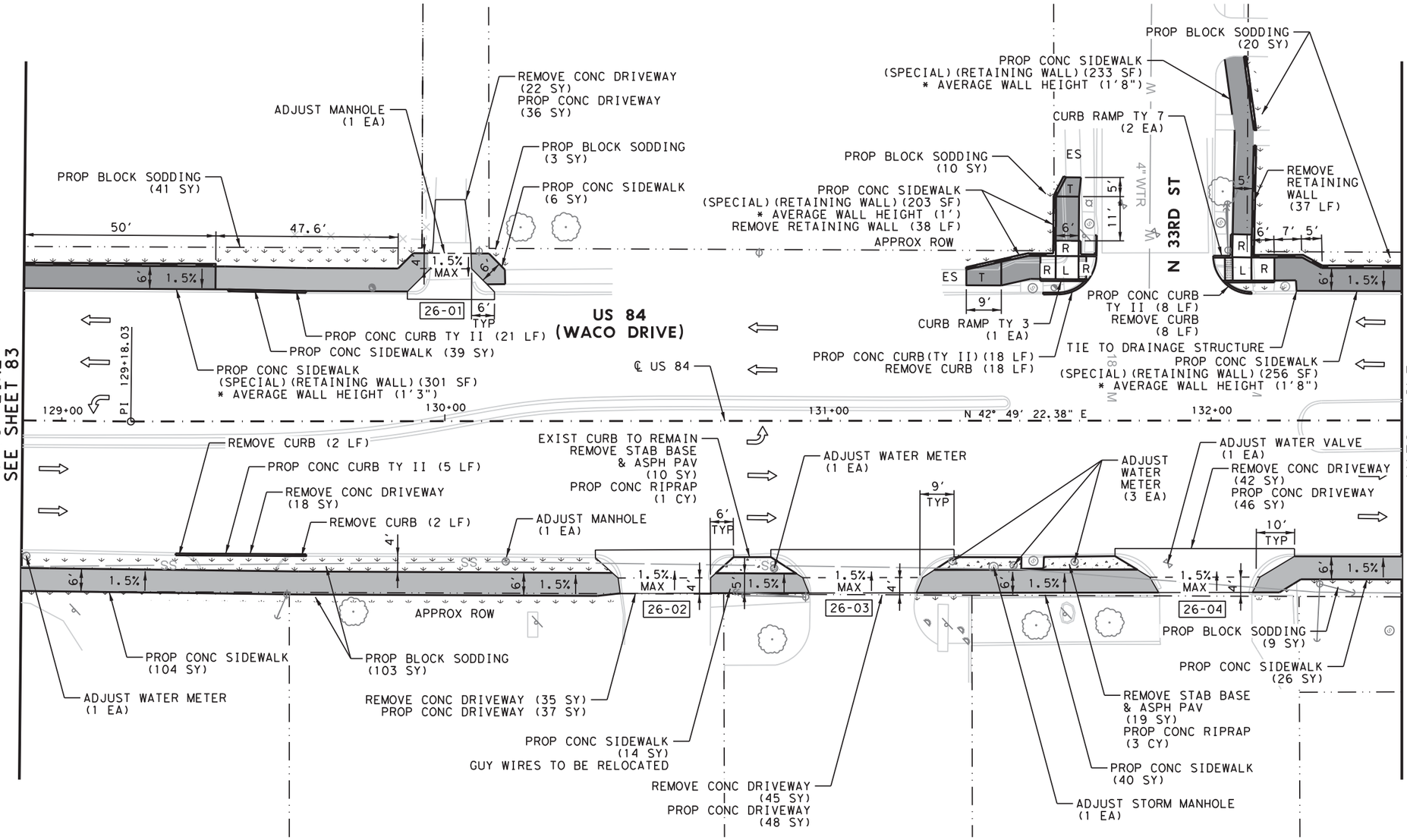

0' 15' 30'

SCALE

NOTES:

* FOR CONTRACTOR INFORMATION ONLY

1. LINEAR DIMENSIONS ARE TO THE BACK OF CURB.
2. RADII CALLOUTS ARE TO NOMINAL FACE OF CURB UNLESS NOTED OTHERWISE.
3. SIDEWALK CROSS SLOPE IS 1.5% USUAL. MAXIMUM ALLOWABLE CROSS SLOPE ON SIDEWALK IS 2.0%.
4. CONTRACTOR SHALL VERIFY ELEVATIONS AND DIMENSIONS IN THE FIELD PRIOR TO CONSTRUCTION.
5. THE INFORMATION SHOWN IN THESE PLANS CONCERNING TYPE AND LOCATION OF UTILITIES IS NOT GUARANTEED TO BE ACCURATE OR ALL INCLUSIVE. IT SHALL BE THE CONTRACTOR'S RESPONSIBILITY TO VERIFY AND LOCATE ALL EXISTING UTILITIES PRIOR TO CONSTRUCTION. THE CONTRACTOR WILL BE SOLELY RESPONSIBLE FOR ANY DAMAGES BY THEIR CONSTRUCTION OPERATIONS TO EXISTING UTILITIES.
6. REFER TO DRIVEWAY DETAILS, MISCELLANEOUS DETAILS, SIGNAL SHEETS, PAVEMENT MARKING SHEETS, SUMMARY OF SMALL SIGNS, AND TXDOT PED STANDARDS FOR ADDITIONAL INFORMATION.
7. PROPOSED SIGN LOCATIONS MAY BE ADJUSTED AS APPROVED BY THE ENGINEER.

JEFFREY T. RUTHART 129231 LICENSED PROFESSIONAL ENGINEER STATE OF TEXAS

03/01/2021

Kimley»Horn F-928

© 2021

Texas Department of Transportation

SPECIAL NOTES & DETAILS

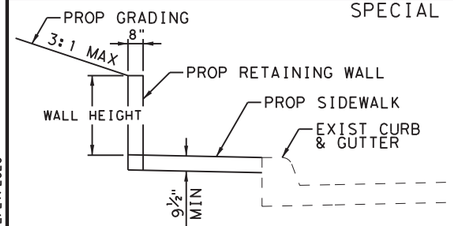

RETAINING WALL DETAIL

NTS

SEE CONCRETE SIDEWALK DETAILS FOR ADDITIONAL WALL AND SIDEWALK INFORMATION.

LEGEND

— · ·	APPROX ROW	L1	LANDING COMMON	R	RAMP
	ELECTRIC BOX/VAULT	LS	LEVEL SIDEWALK (2% MAX)		RIPRAP (CONC)
ES	EXIST SIDEWALK	SL	LONGITUDINAL SLOPES MAY NOT EXCEED 5% & CROSS SLOPES MAY NOT EXCEED 2%	- - -	SAWCUT LINE
ER	EXISTING RAMP				SIDEWALK WALL
—×—	FENCE	RAD	RADIUS		SIGN (EXISTING)
	FIRE HYDRANT	Ⓢ	MANHOLE	XX-X	SIGN NUMBER
F	FLARE		PED SIGNAL POLE (EXIST)		TRAFFIC FLOW
Ⓖ	GAS METER	●	PED SIGNAL POLE (PROP)		TRAF SIGNAL POLE (EXIST)
	GUY ANCHOR		POWER/ILLUMINATION POLE		TRAF SIGNAL POLE (PROP)
	HANDRAIL		PROPOSED ASPHALT PAVING	T	TRANSITION
L	LANDING		PROPOSED CONCRETE PAVING		TREE/BUSHES
	PROPOSED SMALL SIGN		PROPOSED SIDEWALK	Ⓦ	WATER METER

SIDEWALK LAYOUT

AT N 33RD ST

SHEET 26 OF 74

FED.RD. DIV.NO.	PROJECT ID.	HIGHWAY NO.
6	(SEE TITLE SHEET)	US 84

STATE	DIST.	COUNTY	SHEET NO.
TEXAS	WAC	MCLENNAN	84
CONT.	SECT.	JOB	
0055	15	072	

FILENAME: pw:\\kh-pw.bentley.com:kh-pw-01\Documents\01 Active Projects\TX-FTW-063586010 - US 84 (Waco Drive)\WAC 0055150724 - Design\Plan Set\3. Roadway\US84_RDW_SP26.dgn
PLOTTED: 12/21/2020

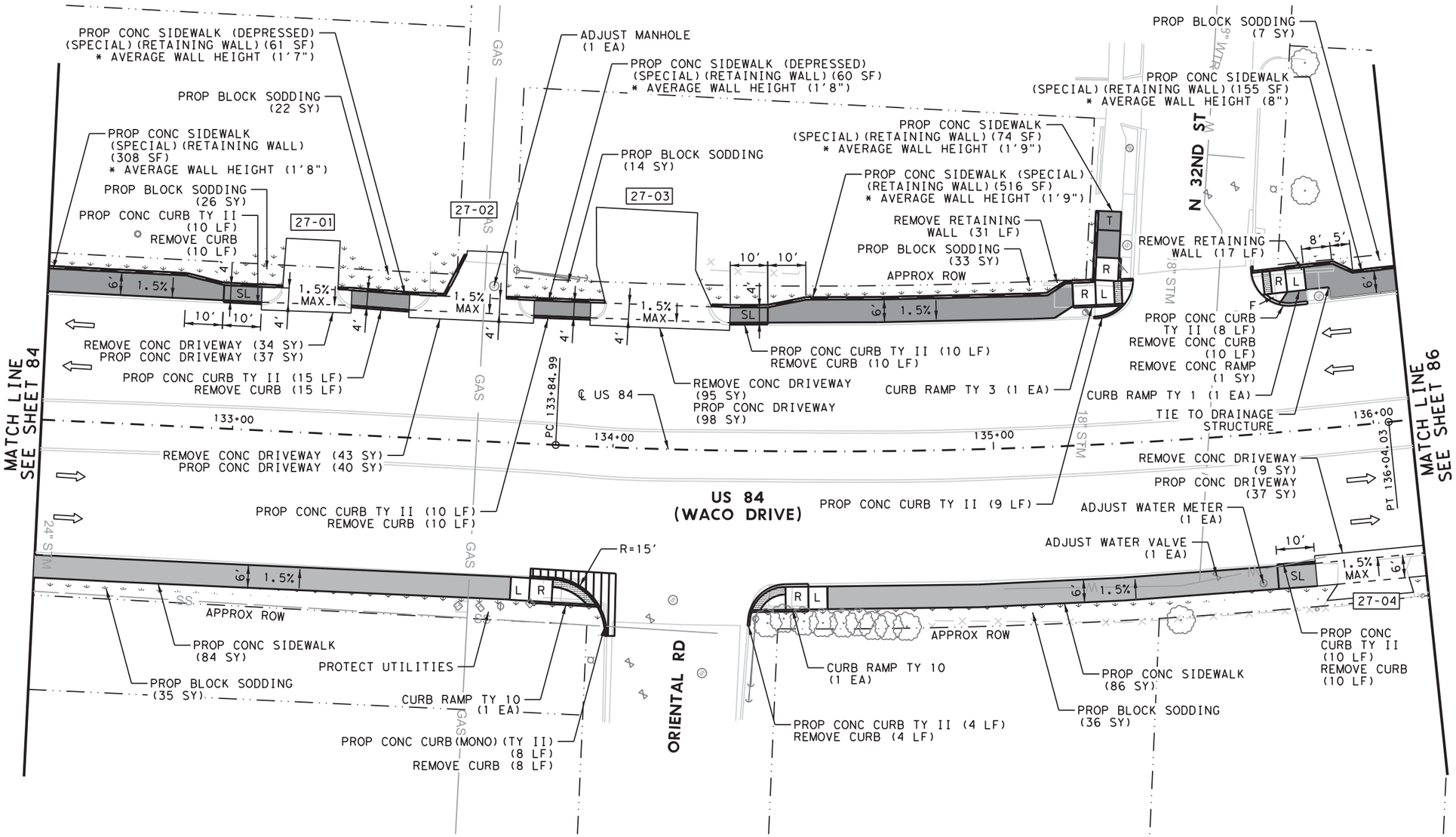

NOTES:

* FOR CONTRACTOR INFORMATION ONLY

1. LINEAR DIMENSIONS ARE TO THE BACK OF CURB.
2. RADII CALLOUTS ARE TO NOMINAL FACE OF CURB UNLESS NOTED OTHERWISE.
3. SIDEWALK CROSS SLOPE IS 1.5% USUAL. MAXIMUM ALLOWABLE CROSS SLOPE ON SIDEWALK IS 2.0%.
4. CONTRACTOR SHALL VERIFY ELEVATIONS AND DIMENSIONS IN THE FIELD PRIOR TO CONSTRUCTION.
5. THE INFORMATION SHOWN IN THESE PLANS CONCERNING TYPE AND LOCATION OF UTILITIES IS NOT GUARANTEED TO BE ACCURATE OR ALL INCLUSIVE. IT SHALL BE THE CONTRACTOR'S RESPONSIBILITY TO VERIFY AND LOCATE ALL EXISTING UTILITIES PRIOR TO CONSTRUCTION. THE CONTRACTOR WILL BE SOLELY RESPONSIBLE FOR ANY DAMAGES BY THEIR CONSTRUCTION OPERATIONS TO EXISTING UTILITIES.
6. REFER TO DRIVEWAY DETAILS, MISCELLANEOUS DETAILS, SIGNAL SHEETS, PAVEMENT MARKING SHEETS, SUMMARY OF SMALL SIGNS, AND TXDOT PED STANDARDS FOR ADDITIONAL INFORMATION.
7. PROPOSED SIGN LOCATIONS MAY BE ADJUSTED AS APPROVED BY THE ENGINEER.

03/01/2021

Kimley»Horn F-928

© 2021

Texas Department of Transportation

SPECIAL NOTES & DETAILS

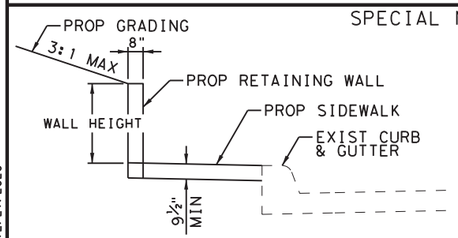

RETAINING WALL DETAIL

NTS

SEE CONCRETE SIDEWALK DETAILS FOR ADDITIONAL WALL AND SIDEWALK INFORMATION.

LEGEND

APPROX ROW	L1	LANDING COMMON	R	RAMP
ELECTRIC BOX/VAULT	LS	LEVEL SIDEWALK (2% MAX)		RIPRAP (CONC)
ES EXIST SIDEWALK	SL	LONGITUDINAL SLOPES MAY NOT EXCEED 5% & CROSS SLOPES MAY NOT EXCEED 2%		SAWCUT LINE
ER EXISTING RAMP				SIDEWALK WALL
FENCE	RAD	RADIUS		SIGN (EXISTING)
FIRE HYDRANT	Ⓢ	MANHOLE	XX-X	SIGN NUMBER
F FLARE		PED SIGNAL POLE (EXIST)		TRAFFIC FLOW
Ⓖ GAS METER		PED SIGNAL POLE (PROP)		TRAF SIGNAL POLE (EXIST)
GUY ANCHOR		POWER/ILLUMINATION POLE		TRAF SIGNAL POLE (PROP)
HANDRAIL		PROPOSED ASPHALT PAVING	T	TRANSITION
L LANDING		PROPOSED CONCRETE PAVING		TREE/BUSHES
PROPOSED SMALL SIGN		PROPOSED SIDEWALK	Ⓦ	WATER METER

SIDEWALK LAYOUT

AT N 32ND ST

SHEET 27 OF 74

FED. RD. DIV. NO.	PROJECT ID.		HIGHWAY NO.
6	(SEE TITLE SHEET)		US 84
STATE	DIST.	COUNTY	SHEET NO.
TEXAS	WAC	MCLENNAN	85
CONT.	SECT.	JOB	
0055	15	072	

FILENAME: pw:\\kh-pw.bentley.com:kh-pw-01\Documents\01 Active Projects\TX-FTW-063586010 - US 84 (Waco Drive)\WAC 0055150721\4 - Design\Plan Set\3. Roadway\US84_RDW_SP27.dgn
PLOTTED: 12/21/2020

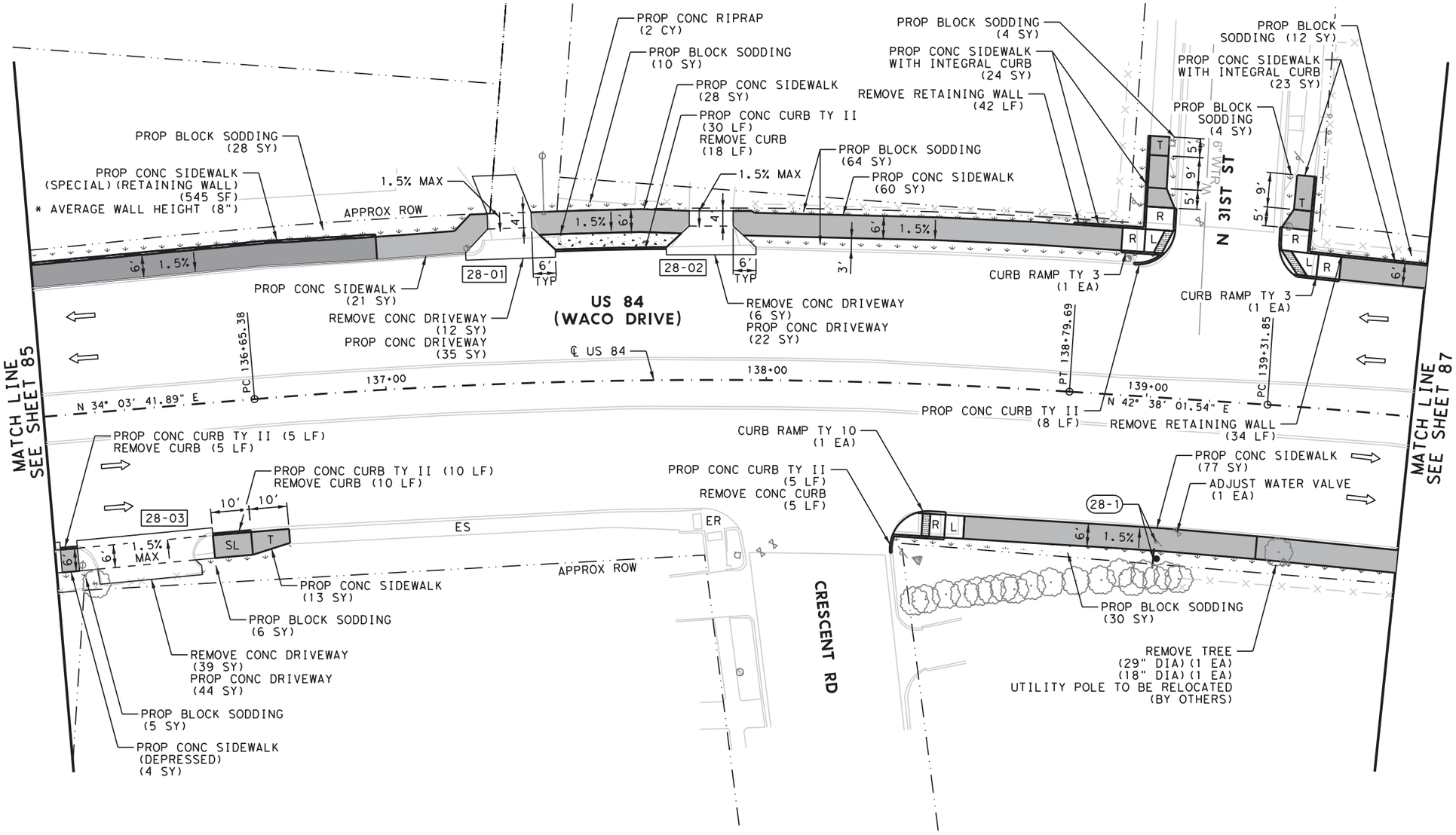

0' 15' 30'

SCALE

NOTES:

* FOR CONTRACTOR INFORMATION ONLY

1. LINEAR DIMENSIONS ARE TO THE BACK OF CURB.
2. RADII CALLOUTS ARE TO NOMINAL FACE OF CURB UNLESS NOTED OTHERWISE.
3. SIDEWALK CROSS SLOPE IS 1.5% USUAL. MAXIMUM ALLOWABLE CROSS SLOPE ON SIDEWALK IS 2.0%.
4. CONTRACTOR SHALL VERIFY ELEVATIONS AND DIMENSIONS IN THE FIELD PRIOR TO CONSTRUCTION.
5. THE INFORMATION SHOWN IN THESE PLANS CONCERNING TYPE AND LOCATION OF UTILITIES IS NOT GUARANTEED TO BE ACCURATE OR ALL INCLUSIVE. IT SHALL BE THE CONTRACTOR'S RESPONSIBILITY TO VERIFY AND LOCATE ALL EXISTING UTILITIES PRIOR TO CONSTRUCTION. THE CONTRACTOR WILL BE SOLELY RESPONSIBLE FOR ANY DAMAGES BY THEIR CONSTRUCTION OPERATIONS TO EXISTING UTILITIES.
6. REFER TO DRIVEWAY DETAILS, MISCELLANEOUS DETAILS, SIGNAL SHEETS, PAVEMENT MARKING SHEETS, SUMMARY OF SMALL SIGNS, AND TXDOT PED STANDARDS FOR ADDITIONAL INFORMATION.
7. PROPOSED SIGN LOCATIONS MAY BE ADJUSTED AS APPROVED BY THE ENGINEER.

03/01/2021

Kimley»Horn F-928

© 2021

Texas Department of Transportation

SPECIAL NOTES & DETAILS

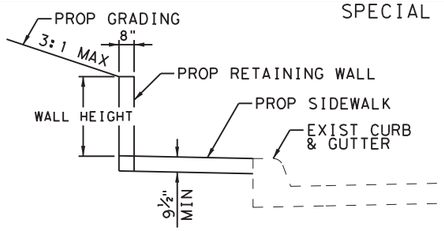

RETAINING WALL DETAIL

NTS

SEE CONCRETE SIDEWALK DETAILS FOR ADDITIONAL WALL AND SIDEWALK INFORMATION.

LEGEND

APPROX ROW	L1	LANDING COMMON	R	RAMP
ELECTRIC BOX/VAULT	LS	LEVEL SIDEWALK (2% MAX)		RIPRAP (CONC)
ES	EXIST SIDEWALK	SL	LONGITUDINAL SLOPES MAY NOT EXCEED 5% & CROSS SLOPES MAY NOT EXCEED 2%		SAWCUT LINE
ER	EXISTING RAMP				SIDEWALK WALL
FENCE	RAD	RADIUS		SIGN (EXISTING)
FIRE HYDRANT	Ⓢ	MANHOLE	XX-X	SIGN NUMBER
F	FLARE		PED SIGNAL POLE (EXIST)		TRAFFIC FLOW
G	GAS METER		PED SIGNAL POLE (PROP)		TRAF SIGNAL POLE (EXIST)
GUY ANCHOR		POWER/ILLUMINATION POLE		TRAF SIGNAL POLE (PROP)
HANDRAIL		PROPOSED ASPHALT PAVING	T	TRANSITION
L	LANDING		PROPOSED CONCRETE PAVING		TREE/BUSHES
PROPOSED SMALL SIGN		PROPOSED SIDEWALK	W	WATER METER

SIDEWALK LAYOUT

AT N 31ST ST

SHEET 28 OF 74

FED. RD. DIV. NO.	PROJECT ID.	HIGHWAY NO.
6	(SEE TITLE SHEET)	US 84

STATE	DIST.	COUNTY	SHEET NO.
TEXAS	WAC	MCLENNAN	86
CONT.	SECT.	JOB	
0055	15	072	

FILENAME: pw:\\kh-pw.bentley.com:kh-pw-01\Documents\01 Active Projects\TX-FTW-063586010 - US 84 (Waco Drive)\WAC 0055150724 - Design\Plan Set\3. Roadway\US84_RDW_SP28.dgn
PLOTTED: 12/21/2020

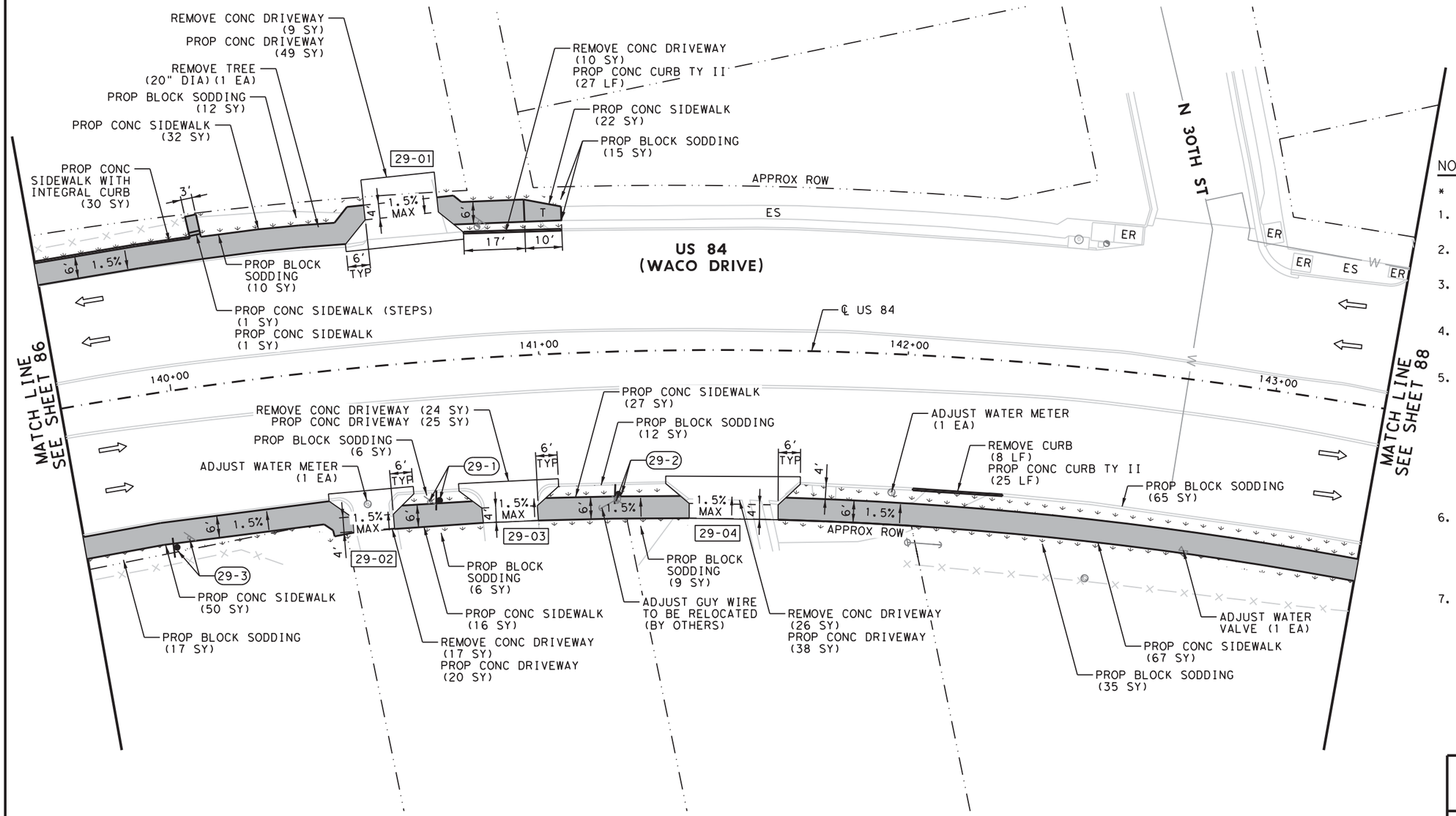

0' 15' 30'

SCALE

NOTES:

* FOR CONTRACTOR INFORMATION ONLY

1. LINEAR DIMENSIONS ARE TO THE BACK OF CURB.
2. RADII CALLOUTS ARE TO NOMINAL FACE OF CURB UNLESS NOTED OTHERWISE.
3. SIDEWALK CROSS SLOPE IS 1.5% USUAL. MAXIMUM ALLOWABLE CROSS SLOPE ON SIDEWALK IS 2.0%.
4. CONTRACTOR SHALL VERIFY ELEVATIONS AND DIMENSIONS IN THE FIELD PRIOR TO CONSTRUCTION.
5. THE INFORMATION SHOWN IN THESE PLANS CONCERNING TYPE AND LOCATION OF UTILITIES IS NOT GUARANTEED TO BE ACCURATE OR ALL INCLUSIVE. IT SHALL BE THE CONTRACTOR'S RESPONSIBILITY TO VERIFY AND LOCATE ALL EXISTING UTILITIES PRIOR TO CONSTRUCTION. THE CONTRACTOR WILL BE SOLELY RESPONSIBLE FOR ANY DAMAGES BY THEIR CONSTRUCTION OPERATIONS TO EXISTING UTILITIES.
6. REFER TO DRIVEWAY DETAILS, MISCELLANEOUS DETAILS, SIGNAL SHEETS, PAVEMENT MARKING SHEETS, SUMMARY OF SMALL SIGNS, AND TXDOT PED STANDARDS FOR ADDITIONAL INFORMATION.
7. PROPOSED SIGN LOCATIONS MAY BE ADJUSTED AS APPROVED BY THE ENGINEER.

STATE OF TEXAS — JEFF L. RUTH — 129201 — LICENSED PROFESSIONAL ENGINEER

03/01/2021

Kimley»Horn F-928

© 2021

Texas Department of Transportation

SPECIAL NOTES & DETAILS

LEGEND

APPROX ROW	L1	LANDING COMMON	R	RAMP
ELECTRIC BOX/VAULT	LS	LEVEL SIDEWALK (2% MAX)		RIPRAP (CONC)
ES EXIST SIDEWALK	SL	LONGITUDINAL SLOPES MAY NOT EXCEED 5% & CROSS SLOPES MAY NOT EXCEED 2%		SAWCUT LINE
ER EXISTING RAMP				SIDEWALK WALL
FENCE	RAD	RADIUS		SIGN (EXISTING)
FIRE HYDRANT	Ⓢ	MANHOLE	XX-X	SIGN NUMBER
F FLARE		PED SIGNAL POLE (EXIST)		TRAFFIC FLOW
Ⓖ GAS METER	●	PED SIGNAL POLE (PROP)		TRAF SIGNAL POLE (EXIST)
GUY ANCHOR		POWER/ILLUMINATION POLE		TRAF SIGNAL POLE (PROP)
HANDRAIL		PROPOSED ASPHALT PAVING	T	TRANSITION
L LANDING		PROPOSED CONCRETE PAVING		TREE/BUSHES
PROPOSED SMALL SIGN		PROPOSED SIDEWALK	Ⓦ	WATER METER

SIDEWALK LAYOUT

AT N 30TH ST

SHEET 29 OF 74

FED. RD. DIV. NO.	PROJECT ID.	HIGHWAY NO.
6	(SEE TITLE SHEET)	US 84

STATE	DIST.	COUNTY	SHEET NO.
TEXAS	WAC	MCLENNAN	87
CONT.	SECT.	JOB	
0055	15	072	

FILENAME: pw:\\kh-pw.bentley.com:kh-pw-01\Documents\01 Active Projects\TX-FTW-063586010 - US 84 (Waco Drive)\WAC 0055150724 - Design\Plan Set\3. Roadway\US84_RDW_SP29.dgn
PLOTTED: 12/21/2020

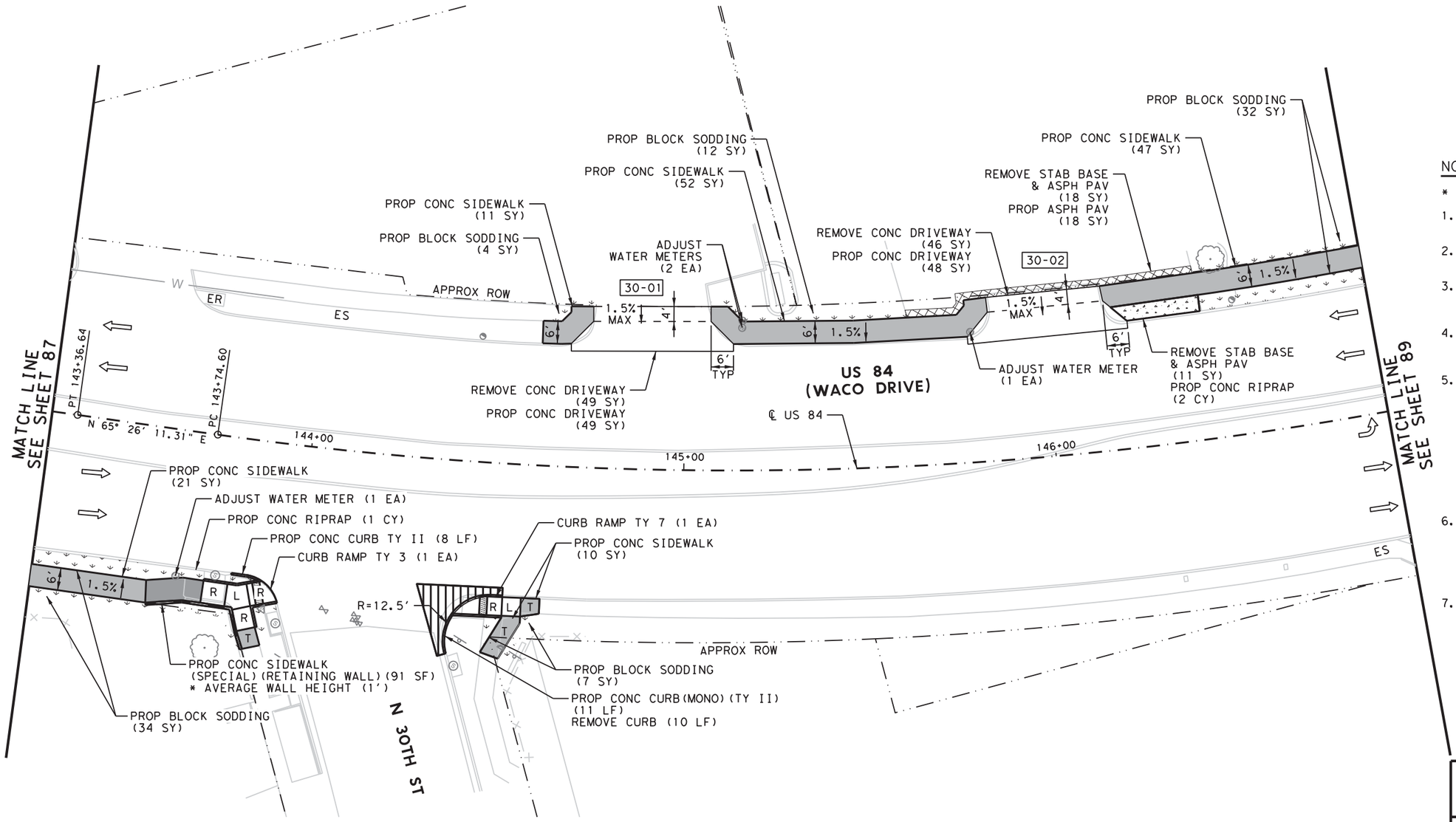

NOTES:

* FOR CONTRACTOR INFORMATION ONLY

1. LINEAR DIMENSIONS ARE TO THE BACK OF CURB.
2. RADII CALLOUTS ARE TO NOMINAL FACE OF CURB UNLESS NOTED OTHERWISE.
3. SIDEWALK CROSS SLOPE IS 1.5% USUAL. MAXIMUM ALLOWABLE CROSS SLOPE ON SIDEWALK IS 2.0%.
4. CONTRACTOR SHALL VERIFY ELEVATIONS AND DIMENSIONS IN THE FIELD PRIOR TO CONSTRUCTION.
5. THE INFORMATION SHOWN IN THESE PLANS CONCERNING TYPE AND LOCATION OF UTILITIES IS NOT GUARANTEED TO BE ACCURATE OR ALL INCLUSIVE. IT SHALL BE THE CONTRACTOR'S RESPONSIBILITY TO VERIFY AND LOCATE ALL EXISTING UTILITIES PRIOR TO CONSTRUCTION. THE CONTRACTOR WILL BE SOLELY RESPONSIBLE FOR ANY DAMAGES BY THEIR CONSTRUCTION OPERATIONS TO EXISTING UTILITIES.
6. REFER TO DRIVEWAY DETAILS, MISCELLANEOUS DETAILS, SIGNAL SHEETS, PAVEMENT MARKING SHEETS, SUMMARY OF SMALL SIGNS, AND TXDOT PED STANDARDS FOR ADDITIONAL INFORMATION.
7. PROPOSED SIGN LOCATIONS MAY BE ADJUSTED AS APPROVED BY THE ENGINEER.

03/01/2021

Kimley»Horn F-928

© 2021

Texas Department of Transportation

SPECIAL NOTES & DETAILS

LEGEND

APPROX ROW	L1	LANDING COMMON	R	RAMP
ELECTRIC BOX/VAULT	LS	LEVEL SIDEWALK (2% MAX)		RIPRAP (CONC)
ES EXIST SIDEWALK	SL	LONGITUDINAL SLOPES MAY NOT EXCEED 5% & CROSS SLOPES MAY NOT EXCEED 2%		SAWCUT LINE
ER EXISTING RAMP				SIDEWALK WALL
FENCE	RAD	RADIUS		SIGN (EXISTING)
FIRE HYDRANT	Ⓢ	MANHOLE	XX-X	SIGN NUMBER
F FLARE		PED SIGNAL POLE (EXIST)		TRAFFIC FLOW
Ⓖ GAS METER		PED SIGNAL POLE (PROP)		TRAF SIGNAL POLE (EXIST)
GUY ANCHOR		POWER/ILLUMINATION POLE		TRAF SIGNAL POLE (PROP)
HANDRAIL		PROPOSED ASPHALT PAVING	T	TRANSITION
L LANDING		PROPOSED CONCRETE PAVING		TREE/BUSHES
PROPOSED SMALL SIGN		PROPOSED SIDEWALK	Ⓦ	WATER METER

SIDEWALK LAYOUT

AT 30TH ST

SHEET 30 OF 74

FED. RD. DIV. NO.	PROJECT ID.	HIGHWAY NO.
6	(SEE TITLE SHEET)	US 84

STATE	DIST.	COUNTY	SHEET NO.
TEXAS	WAC	MCLENNAN	88
CONT.	SECT.	JOB	
0055	15	072	

FILENAME: pw:\\kh-pw.bentley.com:kh-pw-01\Documents\01 Active Projects\TX-FTW-063586010 - US 84 (Waco Drive)\WAC 0055150724 - Design\Plan Set\3. Roadway\US84_RDW_SP30.dgn
PLOTTED: 12/21/2020

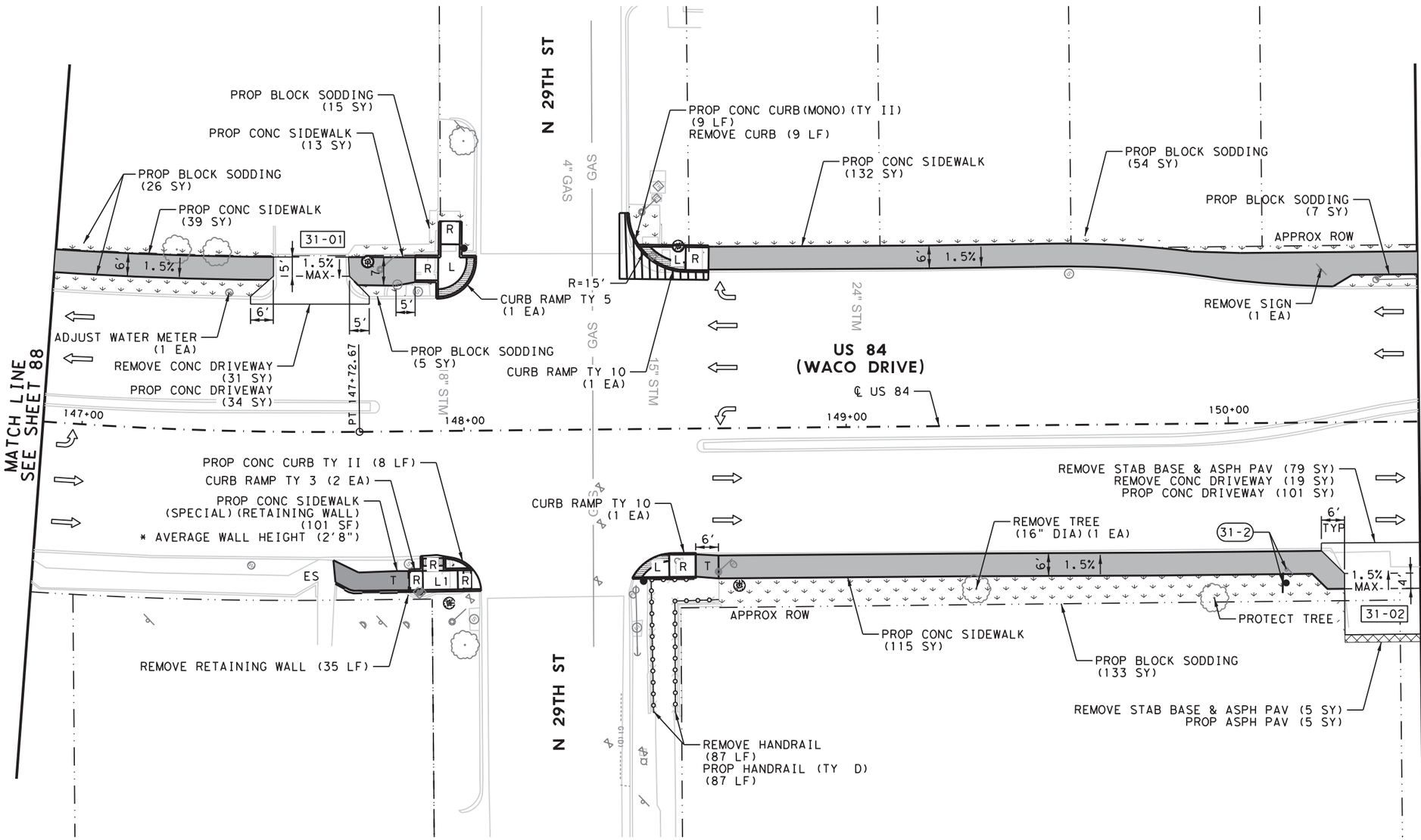

N

0' 15' 30'

SCALE

NOTES:

* FOR CONTRACTOR INFORMATION ONLY

1. LINEAR DIMENSIONS ARE TO THE BACK OF CURB.
2. RADII CALLOUTS ARE TO NOMINAL FACE OF CURB UNLESS NOTED OTHERWISE.
3. SIDEWALK CROSS SLOPE IS 1.5% USUAL. MAXIMUM ALLOWABLE CROSS SLOPE ON SIDEWALK IS 2.0%.
4. CONTRACTOR SHALL VERIFY ELEVATIONS AND DIMENSIONS IN THE FIELD PRIOR TO CONSTRUCTION.
5. THE INFORMATION SHOWN IN THESE PLANS CONCERNING TYPE AND LOCATION OF UTILITIES IS NOT GUARANTEED TO BE ACCURATE OR ALL INCLUSIVE. IT SHALL BE THE CONTRACTOR'S RESPONSIBILITY TO VERIFY AND LOCATE ALL EXISTING UTILITIES PRIOR TO CONSTRUCTION. THE CONTRACTOR WILL BE SOLELY RESPONSIBLE FOR ANY DAMAGES BY THEIR CONSTRUCTION OPERATIONS TO EXISTING UTILITIES.
6. REFER TO DRIVEWAY DETAILS, MISCELLANEOUS DETAILS, SIGNAL SHEETS, PAVEMENT MARKING SHEETS, SUMMARY OF SMALL SIGNS, AND TXDOT PED STANDARDS FOR ADDITIONAL INFORMATION.
7. PROPOSED SIGN LOCATIONS MAY BE ADJUSTED AS APPROVED BY THE ENGINEER.

STATE OF TEXAS — JESSICA RUTH — 119607 — LICENSED PROFESSIONAL ENGINEER

03/01/2021

Kimley»Horn F-928

© 2021

Texas Department of Transportation

SPECIAL NOTES & DETAILS

LEGEND

— · ·	APPROX ROW	L1	LANDING COMMON	R	RAMP
⊏	ELECTRIC BOX/VAULT	LS	LEVEL SIDEWALK (2% MAX)		RIPRAP (CONC)
ES	EXIST SIDEWALK	SL	LONGITUDINAL SLOPES MAY NOT EXCEED 5% & CROSS SLOPES MAY NOT EXCEED 2%	— — —	SAWCUT LINE
ER	EXISTING RAMP				SIDEWALK WALL
—×—	FENCE	RAD	RADIUS		SIGN (EXISTING)
	FIRE HYDRANT	Ⓢ	MANHOLE	XX-X	SIGN NUMBER
F	FLARE		PED SIGNAL POLE (EXIST)		TRAFFIC FLOW
Ⓖ	GAS METER	●	PED SIGNAL POLE (PROP)		TRAF SIGNAL POLE (EXIST)
	GUY ANCHOR		POWER/ILLUMINATION POLE		TRAF SIGNAL POLE (PROP)
	HANDRAIL		PROPOSED ASPHALT PAVING	T	TRANSITION
L	LANDING		PROPOSED CONCRETE PAVING		TREE/BUSHES
	PROPOSED SMALL SIGN		PROPOSED SIDEWALK	Ⓦ	WATER METER

SIDEWALK LAYOUT

AT N 29TH ST

SHEET 31 OF 74

FED. RD. DIV. NO.	PROJECT ID.	HIGHWAY NO.
6	(SEE TITLE SHEET)	US 84

STATE	DIST.	COUNTY	SHEET NO.
TEXAS	WAC	MCLENNAN	89
CONT.	SECT.	JOB	
0055	15	072	

FILENAME: pw:\\kh-pw.bentley.com:kh-pw-01\Documents\01 Active Projects\TX-FTW-063586010 - US 84 (Waco Drive)\WAC 0055150721\4 - Design\Plan Set\3. Roadway\US84_RDW_SP31.dgn
PLOTTED: 12/21/2020

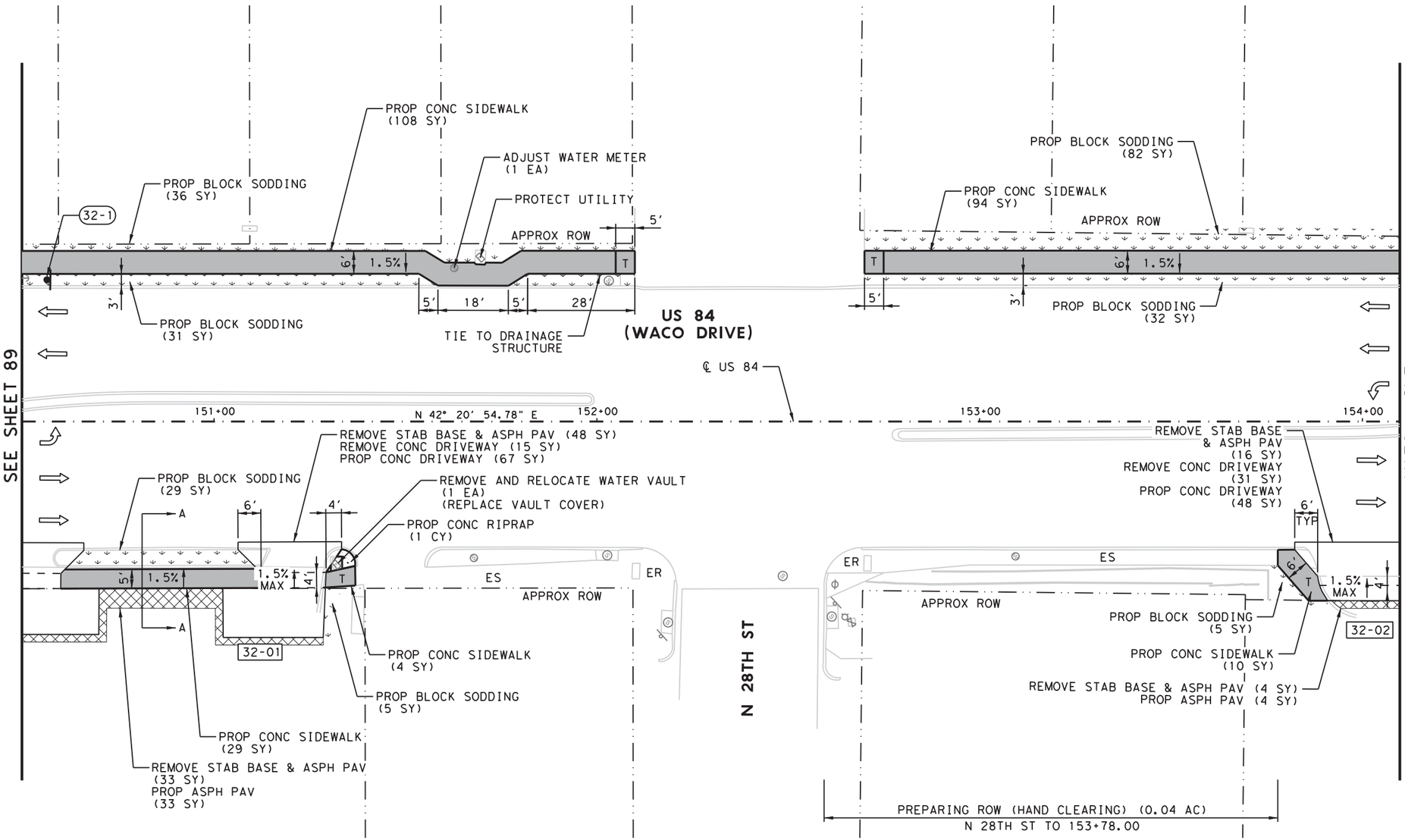

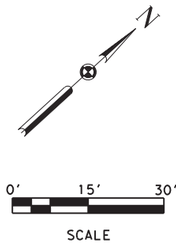

NOTES:

* FOR CONTRACTOR INFORMATION ONLY

1. LINEAR DIMENSIONS ARE TO THE BACK OF CURB.
2. RADII CALLOUTS ARE TO NOMINAL FACE OF CURB UNLESS NOTED OTHERWISE.
3. SIDEWALK CROSS SLOPE IS 1.5% USUAL. MAXIMUM ALLOWABLE CROSS SLOPE ON SIDEWALK IS 2.0%.
4. CONTRACTOR SHALL VERIFY ELEVATIONS AND DIMENSIONS IN THE FIELD PRIOR TO CONSTRUCTION.
5. THE INFORMATION SHOWN IN THESE PLANS CONCERNING TYPE AND LOCATION OF UTILITIES IS NOT GUARANTEED TO BE ACCURATE OR ALL INCLUSIVE. IT SHALL BE THE CONTRACTOR'S RESPONSIBILITY TO VERIFY AND LOCATE ALL EXISTING UTILITIES PRIOR TO CONSTRUCTION. THE CONTRACTOR WILL BE SOLELY RESPONSIBLE FOR ANY DAMAGES BY THEIR CONSTRUCTION OPERATIONS TO EXISTING UTILITIES.
6. REFER TO DRIVEWAY DETAILS, MISCELLANEOUS DETAILS, SIGNAL SHEETS, PAVEMENT MARKING SHEETS, SUMMARY OF SMALL SIGNS, AND TXDOT PED STANDARDS FOR ADDITIONAL INFORMATION.
7. PROPOSED SIGN LOCATIONS MAY BE ADJUSTED AS APPROVED BY THE ENGINEER.

03/01/2021

Kimley»Horn F-928

© 2021

Texas Department of Transportation

SPECIAL NOTES & DETAILS

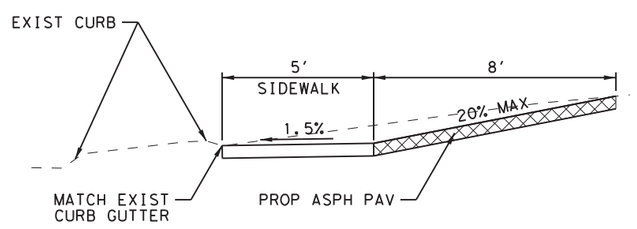

SECTION A-A

LEGEND

APPROX ROW	L1	LANDING COMMON	R	RAMP
ELECTRIC BOX/VAULT	LS	LEVEL SIDEWALK (2% MAX)		RIPRAP (CONC)
ES EXIST SIDEWALK	SL	LONGITUDINAL SLOPES MAY NOT EXCEED 5% & CROSS SLOPES MAY NOT EXCEED 2%		SAWCUT LINE
ER EXISTING RAMP				SIDEWALK WALL
FENCE	RAD	RADIUS		SIGN (EXISTING)
FIRE HYDRANT	Ⓢ	MANHOLE	XX-X	SIGN NUMBER
F FLARE		PED SIGNAL POLE (EXIST)		TRAFFIC FLOW
Ⓖ GAS METER	●	PED SIGNAL POLE (PROP)		TRAF SIGNAL POLE (EXIST)
GUY ANCHOR		POWER/ILLUMINATION POLE		TRAF SIGNAL POLE (PROP)
HANDRAIL		PROPOSED ASPHALT PAVING	T	TRANSITION
L LANDING		PROPOSED CONCRETE PAVING		TREE/BUSHES
PROPOSED SMALL SIGN		PROPOSED SIDEWALK	Ⓦ	WATER METER

SIDEWALK LAYOUT

AT N 28TH ST

SHEET 32 OF 74

FED.RD. DIV.NO.	PROJECT ID.	HIGHWAY NO.
6	(SEE TITLE SHEET)	US 84

STATE	DIST.	COUNTY	SHEET NO.
TEXAS	WAC	MCLENNAN	90
CONT.	SECT.	JOB	
0055	15	072	

FILENAME: pw:\\kh-pw.bentley.com:kh-pw-01\Documents\01 Active Projects\TX-FTW-063586010 - US 84 (Waco Drive)\WAC 0055150724 - Design\Plan Set\3. Roadway\US84_RDW_SP32.dgn
PLOTTED: 12/21/2020

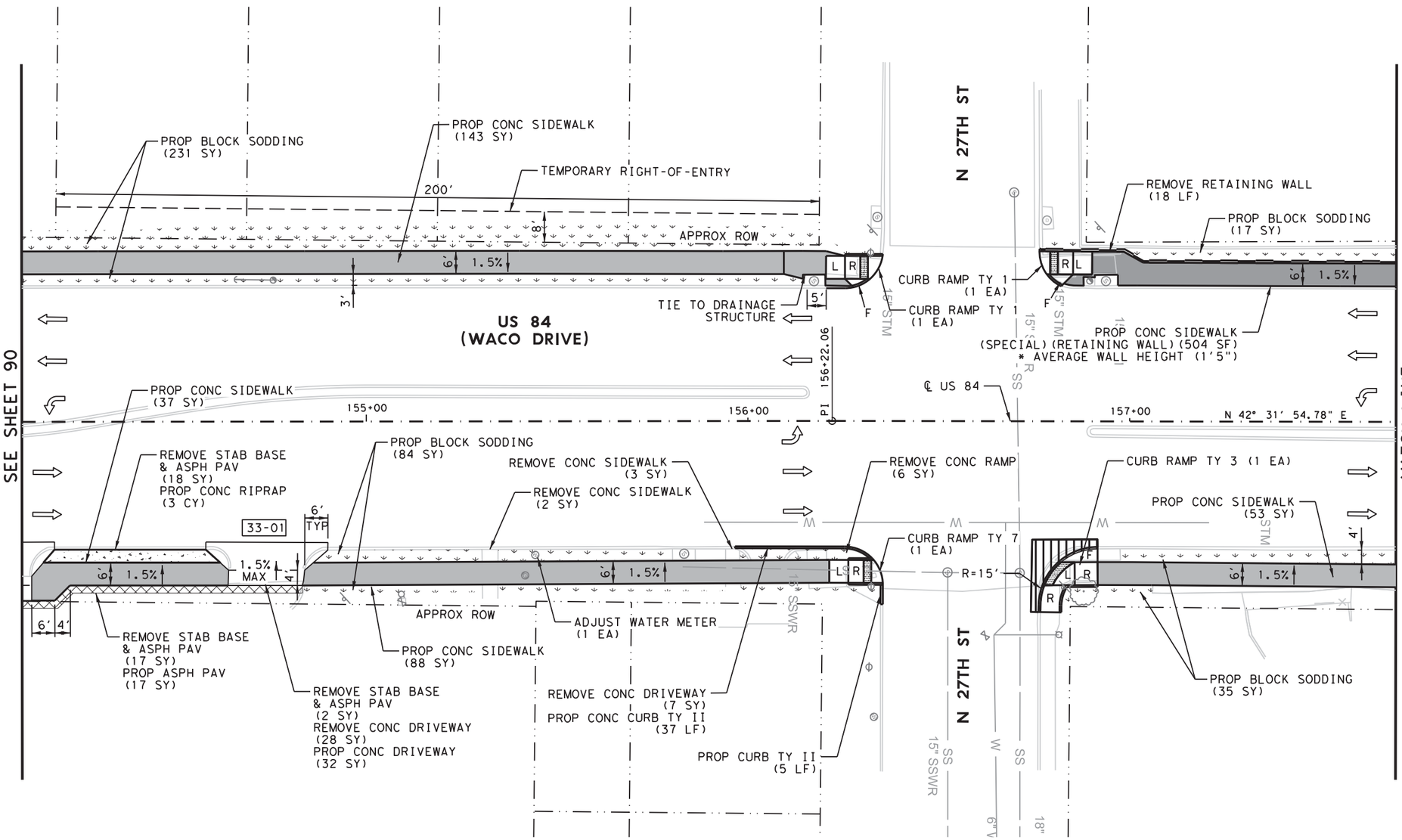

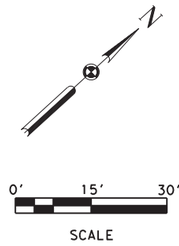

NOTES:

* FOR CONTRACTOR INFORMATION ONLY

1. LINEAR DIMENSIONS ARE TO THE BACK OF CURB.
2. RADII CALLOUTS ARE TO NOMINAL FACE OF CURB UNLESS NOTED OTHERWISE.
3. SIDEWALK CROSS SLOPE IS 1.5% USUAL. MAXIMUM ALLOWABLE CROSS SLOPE ON SIDEWALK IS 2.0%.
4. CONTRACTOR SHALL VERIFY ELEVATIONS AND DIMENSIONS IN THE FIELD PRIOR TO CONSTRUCTION.
5. THE INFORMATION SHOWN IN THESE PLANS CONCERNING TYPE AND LOCATION OF UTILITIES IS NOT GUARANTEED TO BE ACCURATE OR ALL INCLUSIVE. IT SHALL BE THE CONTRACTOR'S RESPONSIBILITY TO VERIFY AND LOCATE ALL EXISTING UTILITIES PRIOR TO CONSTRUCTION. THE CONTRACTOR WILL BE SOLELY RESPONSIBLE FOR ANY DAMAGES BY THEIR CONSTRUCTION OPERATIONS TO EXISTING UTILITIES.
6. REFER TO DRIVEWAY DETAILS, MISCELLANEOUS DETAILS, SIGNAL SHEETS, PAVEMENT MARKING SHEETS, SUMMARY OF SMALL SIGNS, AND TXDOT PED STANDARDS FOR ADDITIONAL INFORMATION.
7. PROPOSED SIGN LOCATIONS MAY BE ADJUSTED AS APPROVED BY THE ENGINEER.

SETH T. RUTLEDGE
129231
LICENSED
PROFESSIONAL ENGINEER
STATE OF TEXAS

03/01/2021

Kimley»Horn F-928

© 2021

Texas Department of Transportation

SPECIAL NOTES & DETAILS

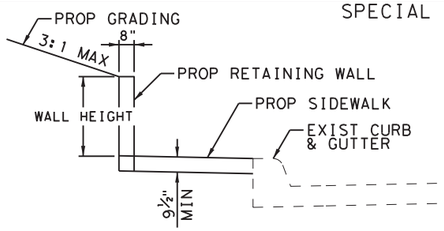

RETAINING WALL DETAIL
NTS

SEE CONCRETE SIDEWALK DETAILS FOR ADDITIONAL WALL AND SIDEWALK INFORMATION.

LEGEND

APPROX ROW	L1	LANDING COMMON	R	RAMP
ELECTRIC BOX/VAULT	LS	LEVEL SIDEWALK (2% MAX)		RIPRAP (CONC)
ES EXIST SIDEWALK	SL	LONGITUDINAL SLOPES MAY NOT EXCEED 5% & CROSS SLOPES MAY NOT EXCEED 2%		SAWCUT LINE
ER EXISTING RAMP				SIDEWALK WALL
FENCE	RAD	RADIUS		SIGN (EXISTING)
FIRE HYDRANT	Ⓢ	MANHOLE	XX-X	SIGN NUMBER
F FLARE		PED SIGNAL POLE (EXIST)		TRAFFIC FLOW
Ⓖ GAS METER	●	PED SIGNAL POLE (PROP)		TRAF SIGNAL POLE (EXIST)
GUY ANCHOR	ϕ	POWER/ILLUMINATION POLE		TRAF SIGNAL POLE (PROP)
HANDRAIL		PROPOSED ASPHALT PAVING	T	TRANSITION
L LANDING		PROPOSED CONCRETE PAVING		TREE/BUSHES
PROPOSED SMALL SIGN		PROPOSED SIDEWALK	Ⓦ	WATER METER

SIDEWALK LAYOUT

AT N 27TH ST

SHEET 33 OF 74

FED.RD. DIV.NO.	PROJECT ID.	HIGHWAY NO.
6	(SEE TITLE SHEET)	US 84

STATE	DIST.	COUNTY	SHEET NO.
TEXAS	WAC	MCLENNAN	91
CONT.	SECT.	JOB	
0055	15	072	

FILENAME: pw:\\kh-pw.bentley.com:kh-pw-01\Documents\01 Active Projects\TX-FTW-063586010 - US 84 (Waco Drive)\WAC 005515072\4 - Design\Plan Set\3. Roadway\US84_RDW_SP33.dgn
PLOTTED: 12/21/2020

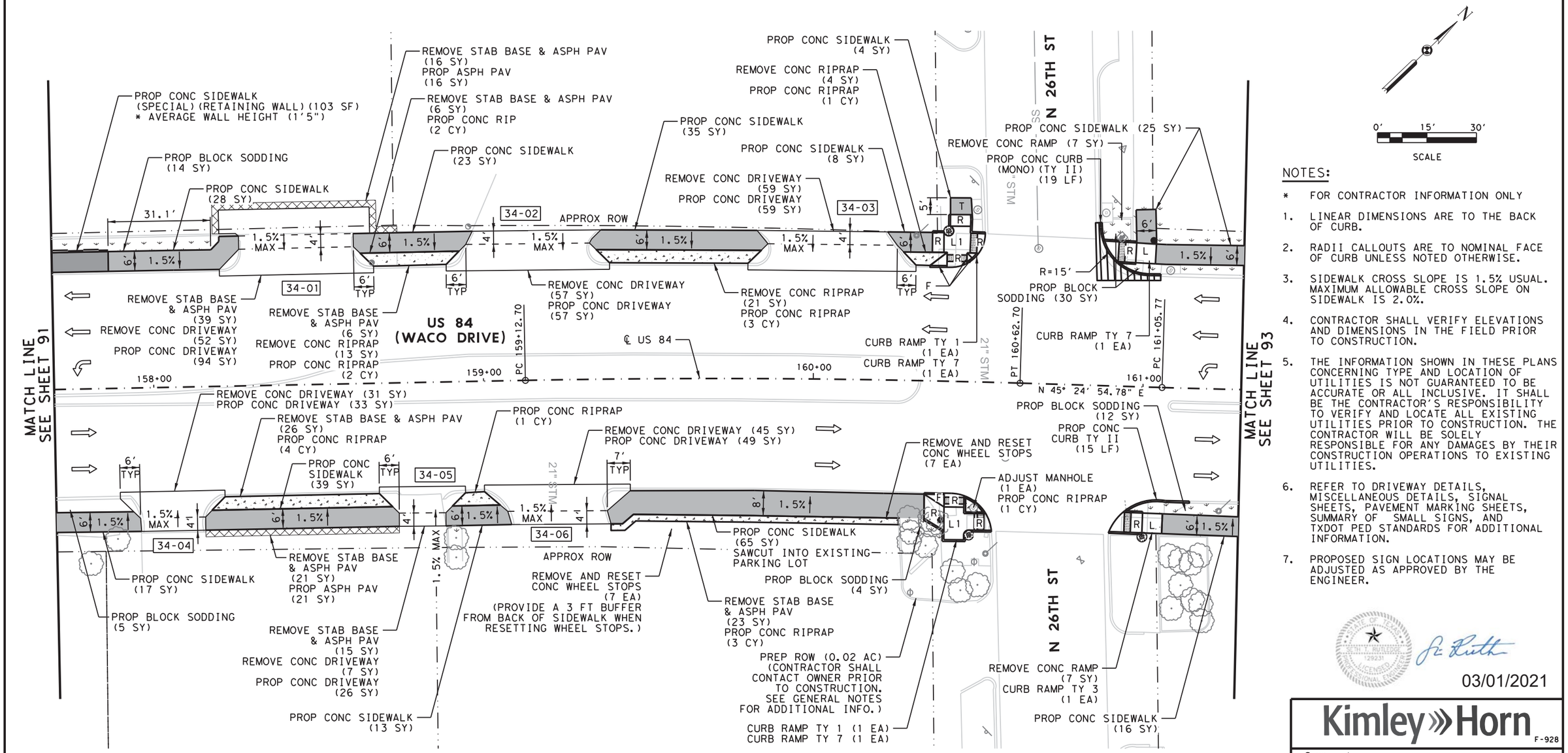

NOTES:

* FOR CONTRACTOR INFORMATION ONLY

1. LINEAR DIMENSIONS ARE TO THE BACK OF CURB.
2. RADII CALLOUTS ARE TO NOMINAL FACE OF CURB UNLESS NOTED OTHERWISE.
3. SIDEWALK CROSS SLOPE IS 1.5% USUAL. MAXIMUM ALLOWABLE CROSS SLOPE ON SIDEWALK IS 2.0%.
4. CONTRACTOR SHALL VERIFY ELEVATIONS AND DIMENSIONS IN THE FIELD PRIOR TO CONSTRUCTION.
5. THE INFORMATION SHOWN IN THESE PLANS CONCERNING TYPE AND LOCATION OF UTILITIES IS NOT GUARANTEED TO BE ACCURATE OR ALL INCLUSIVE. IT SHALL BE THE CONTRACTOR'S RESPONSIBILITY TO VERIFY AND LOCATE ALL EXISTING UTILITIES PRIOR TO CONSTRUCTION. THE CONTRACTOR WILL BE SOLELY RESPONSIBLE FOR ANY DAMAGES BY THEIR CONSTRUCTION OPERATIONS TO EXISTING UTILITIES.
6. REFER TO DRIVEWAY DETAILS, MISCELLANEOUS DETAILS, SIGNAL SHEETS, PAVEMENT MARKING SHEETS, SUMMARY OF SMALL SIGNS, AND TXDOT PED STANDARDS FOR ADDITIONAL INFORMATION.
7. PROPOSED SIGN LOCATIONS MAY BE ADJUSTED AS APPROVED BY THE ENGINEER.

STATE OF TEXAS
JAMES RUTH
103927
LICENSED
PROFESSIONAL ENGINEER

03/01/2021

Kimley»Horn F-928

© 2021

Texas Department of Transportation

SPECIAL NOTES & DETAILS

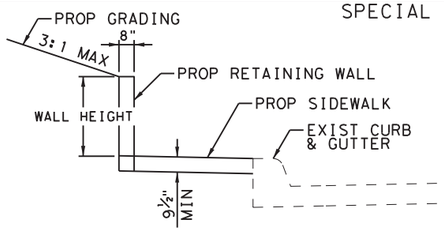

RETAINING WALL DETAIL
NTS

SEE CONCRETE SIDEWALK DETAILS FOR ADDITIONAL WALL AND SIDEWALK INFORMATION.

LEGEND

APPROX ROW	L1	LANDING COMMON	R	RAMP
ELECTRIC BOX/VAULT	LS	LEVEL SIDEWALK (2% MAX)	RIPRAP (CONC)
ES	EXIST SIDEWALK	SL	LONGITUDINAL SLOPES MAY NOT EXCEED 5% & CROSS SLOPES MAY NOT EXCEED 2%	SAWCUT LINE
ER	EXISTING RAMP			SIDEWALK WALL
FENCE	RAD	RADIUS	SIGN (EXISTING)
FIRE HYDRANT	MANHOLE	XX-X	SIGN NUMBER
F	FLARE	PED SIGNAL POLE (EXIST)	TRAFFIC FLOW
G	GAS METER	PED SIGNAL POLE (PROP)	TRAF SIGNAL POLE (EXIST)
GUY ANCHOR	POWER/ILLUMINATION POLE	TRAF SIGNAL POLE (PROP)
HANDRAIL	PROPOSED ASPHALT PAVING	T	TRANSITION
L	LANDING	PROPOSED CONCRETE PAVING	TREE/BUSHES
PROPOSED SMALL SIGN	PROPOSED SIDEWALK	W	WATER METER

SIDEWALK LAYOUT

AT N 26TH ST

SHEET 34 OF 74

FED. RD. DIV. NO.	PROJECT ID.	HIGHWAY NO.
6	(SEE TITLE SHEET)	US 84

STATE	DIST.	COUNTY	SHEET NO.
TEXAS	WAC	MCLENNAN	92
CONT.	SECT.	JOB	
0055	15	072	

FILENAME: pw:\\kh-pw.bentley.com:kh-pw-01\Documents\01 Active Projects\TX-FTW-063586010 - US 84 (Waco Drive)\WAC 0055150724 - Design\Plan Set\3. Roadway\US84_RDW_SP34.dgn
PLOTTED: 12/21/2020

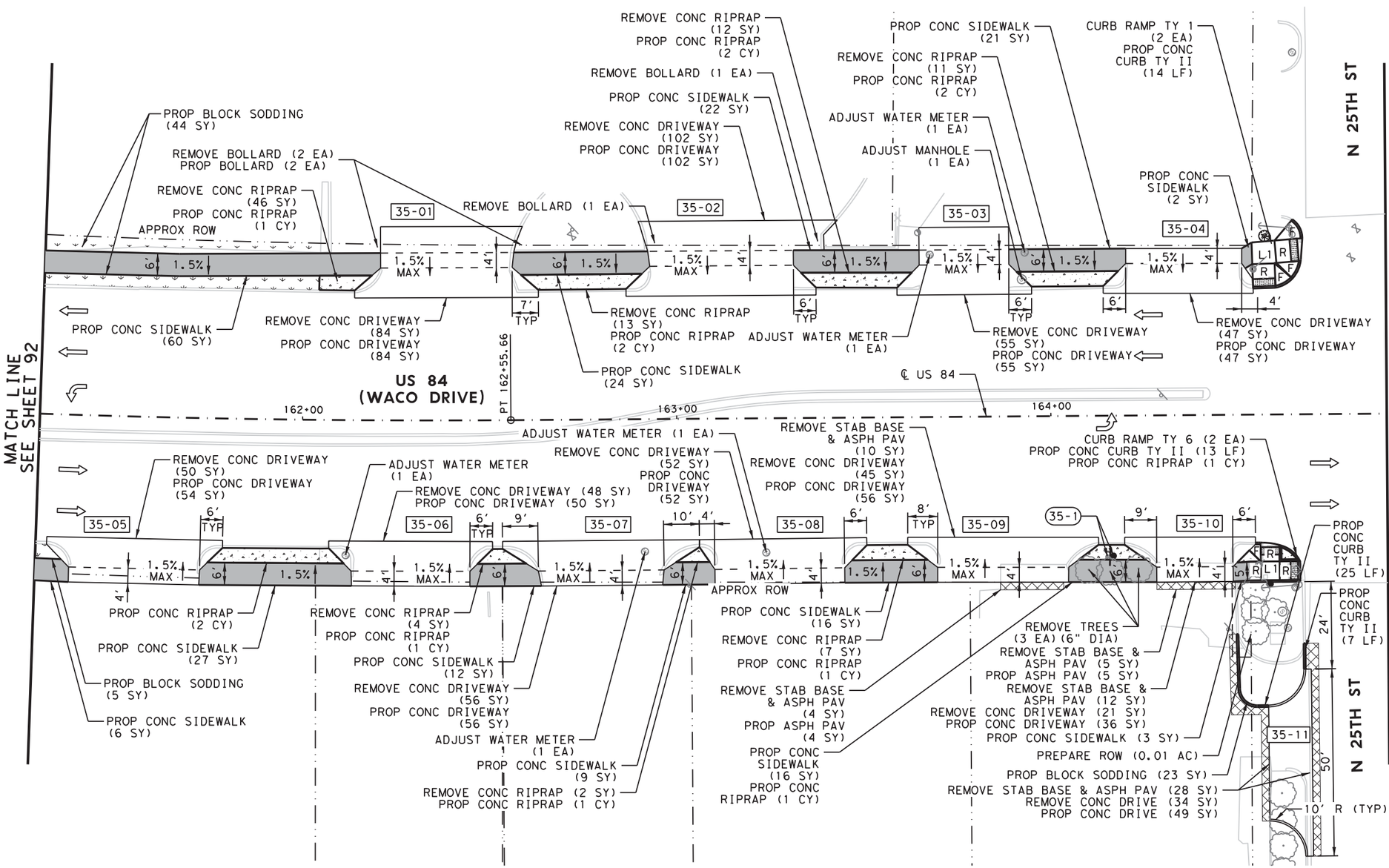

0' 15' 30'

SCALE

NOTES:

* FOR CONTRACTOR INFORMATION ONLY

1. LINEAR DIMENSIONS ARE TO THE BACK OF CURB.
2. RADII CALLOUTS ARE TO NOMINAL FACE OF CURB UNLESS NOTED OTHERWISE.
3. SIDEWALK CROSS SLOPE IS 1.5% USUAL. MAXIMUM ALLOWABLE CROSS SLOPE ON SIDEWALK IS 2.0%.
4. CONTRACTOR SHALL VERIFY ELEVATIONS AND DIMENSIONS IN THE FIELD PRIOR TO CONSTRUCTION.
5. THE INFORMATION SHOWN IN THESE PLANS CONCERNING TYPE AND LOCATION OF UTILITIES IS NOT GUARANTEED TO BE ACCURATE OR ALL INCLUSIVE. IT SHALL BE THE CONTRACTOR'S RESPONSIBILITY TO VERIFY AND LOCATE ALL EXISTING UTILITIES PRIOR TO CONSTRUCTION. THE CONTRACTOR WILL BE SOLELY RESPONSIBLE FOR ANY DAMAGES BY THEIR CONSTRUCTION OPERATIONS TO EXISTING UTILITIES.
6. REFER TO DRIVEWAY DETAILS, MISCELLANEOUS DETAILS, SIGNAL SHEETS, PAVEMENT MARKING SHEETS, SUMMARY OF SMALL SIGNS, AND TXDOT PED STANDARDS FOR ADDITIONAL INFORMATION.
7. PROPOSED SIGN LOCATIONS MAY BE ADJUSTED AS APPROVED BY THE ENGINEER.

SPECIAL NOTES & DETAILS

LEGEND

APPROX ROW	L1	LANDING COMMON	R	RAMP
ELECTRIC BOX/VAULT	LS	LEVEL SIDEWALK (2% MAX)		RIPRAP (CONC)
ES EXIST SIDEWALK	SL	LONGITUDINAL SLOPES MAY NOT EXCEED 5% & CROSS SLOPES MAY NOT EXCEED 2%		SAWCUT LINE
ER EXISTING RAMP				SIDEWALK WALL
FENCE	RAD	RADIUS		SIGN (EXISTING)
FIRE HYDRANT	Ⓢ	MANHOLE	XX-X	SIGN NUMBER
F FLARE		PED SIGNAL POLE (EXIST)		TRAFFIC FLOW
Ⓖ GAS METER	●	PED SIGNAL POLE (PROP)		TRAF SIGNAL POLE (EXIST)
GUY ANCHOR		POWER/ILLUMINATION POLE		TRAF SIGNAL POLE (PROP)
HANDRAIL		PROPOSED ASPHALT PAVING	T	TRANSITION
L LANDING		PROPOSED CONCRETE PAVING		TREE/BUSHES
PROPOSED SMALL SIGN		PROPOSED SIDEWALK	Ⓦ	WATER METER

STATE OF TEXAS
SETH T. RUTHERFORD
129231
LICENSED
PROFESSIONAL ENGINEER

03/01/2021

Kimley»Horn F-928

© 2021

Texas Department of Transportation

SIDEWALK LAYOUT

AT N 25TH ST

SHEET 35 OF 74

FED.RD. DIV.NO.	PROJECT ID.	HIGHWAY NO.
6	(SEE TITLE SHEET)	US 84

STATE	DIST.	COUNTY	SHEET NO.
TEXAS	WAC	MCLENNAN	93
CONT.	SECT.	JOB	
0055	15	072	

FILENAME: pw:\\kh-pw.bentley.com:kh-pw-01\Documents\01 Active Projects\TX-FTW-063586010 - US 84 (Waco Drive)\WAC 0055150721\4 - Design\Plan Set\3. Roadway\US84_RDW_SP35.dgn
PLOTTED: 12/21/2020

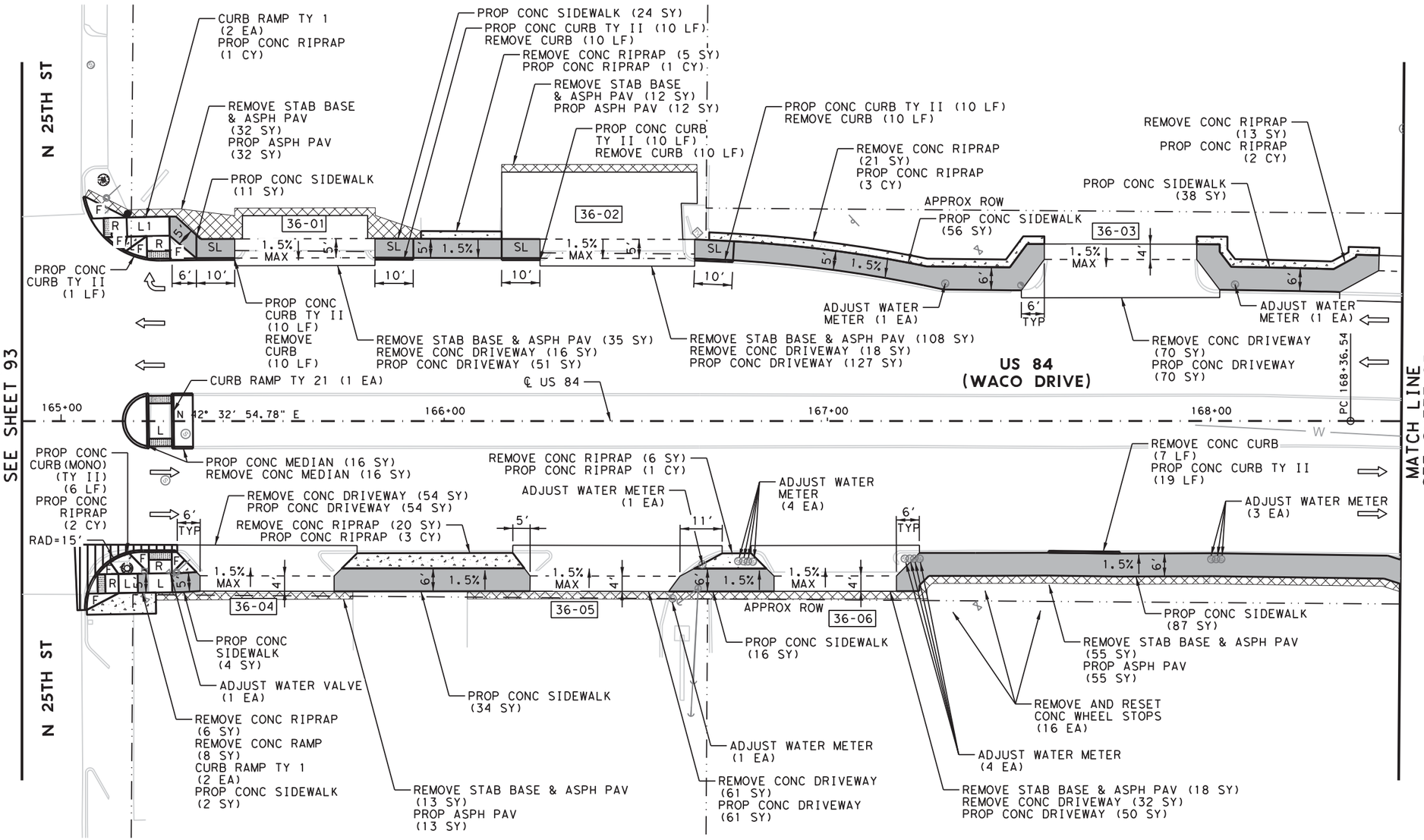

0' 15' 30'

SCALE

NOTES:

* FOR CONTRACTOR INFORMATION ONLY

1. LINEAR DIMENSIONS ARE TO THE BACK OF CURB.
2. RADII CALLOUTS ARE TO NOMINAL FACE OF CURB UNLESS NOTED OTHERWISE.
3. SIDEWALK CROSS SLOPE IS 1.5% USUAL. MAXIMUM ALLOWABLE CROSS SLOPE ON SIDEWALK IS 2.0%.
4. CONTRACTOR SHALL VERIFY ELEVATIONS AND DIMENSIONS IN THE FIELD PRIOR TO CONSTRUCTION.
5. THE INFORMATION SHOWN IN THESE PLANS CONCERNING TYPE AND LOCATION OF UTILITIES IS NOT GUARANTEED TO BE ACCURATE OR ALL INCLUSIVE. IT SHALL BE THE CONTRACTOR'S RESPONSIBILITY TO VERIFY AND LOCATE ALL EXISTING UTILITIES PRIOR TO CONSTRUCTION. THE CONTRACTOR WILL BE SOLELY RESPONSIBLE FOR ANY DAMAGES BY THEIR CONSTRUCTION OPERATIONS TO EXISTING UTILITIES.
6. REFER TO DRIVEWAY DETAILS, MISCELLANEOUS DETAILS, SIGNAL SHEETS, PAVEMENT MARKING SHEETS, SUMMARY OF SMALL SIGNS, AND TXDOT PED STANDARDS FOR ADDITIONAL INFORMATION.
7. PROPOSED SIGN LOCATIONS MAY BE ADJUSTED AS APPROVED BY THE ENGINEER.

STATE OF TEXAS — JEFFREY RUTH — 129231 — LICENSED PROFESSIONAL ENGINEER

03/01/2021

Kimley»Horn F-928

© 2021

Texas Department of Transportation

SPECIAL NOTES & DETAILS

LEGEND

APPROX ROW	L1	LANDING COMMON	R	RAMP	
ELECTRIC BOX/VAULT	LS	LEVEL SIDEWALK (2% MAX)		RIPRAP (CONC)	
ES EXIST SIDEWALK	SL	LONGITUDINAL SLOPES MAY NOT EXCEED 5% & CROSS SLOPES MAY NOT EXCEED 2%		SAWCUT LINE	
ER EXISTING RAMP				SIDEWALK WALL	
FENCE	RAD	RADIUS		SIGN (EXISTING)	
FIRE HYDRANT	Ⓢ	MANHOLE	XX-X	SIGN NUMBER	
F FLARE		PED SIGNAL POLE (EXIST)		TRAFFIC FLOW	
Ⓖ GAS METER	●	PED SIGNAL POLE (PROP)		TRAF SIGNAL POLE (EXIST)	
GUY ANCHOR	ϕ	POWER/ILLUMINATION POLE		TRAF SIGNAL POLE (PROP)	
HANDRAIL		PROPOSED ASPHALT PAVING	T	TRANSITION	
L LANDING		PROPOSED CONCRETE PAVING		TREE/BUSHES	
PROPOSED SMALL SIGN		PROPOSED SIDEWALK	Ⓦ	WATER METER	

SIDEWALK LAYOUT

AT N 25TH ST

SHEET 36 OF 74

FED.RD. DIV.NO.	PROJECT ID.	HIGHWAY NO.
6	(SEE TITLE SHEET)	US 84

STATE	DIST.	COUNTY	SHEET NO.
TEXAS	WAC	MCLENNAN	94
CONT.	SECT.	JOB	
0055	15	072	

FILENAME: pw:\\kh-pw.bentley.com:kh-pw-01\Documents\01 Active Projects\TX-FTW-063586010 - US 84 (Waco Drive)\WAC 0055150724 - Design\Plan Set\3. Roadway\US84_RDW_SP36.dgn
PLOTTED: 12/21/2020

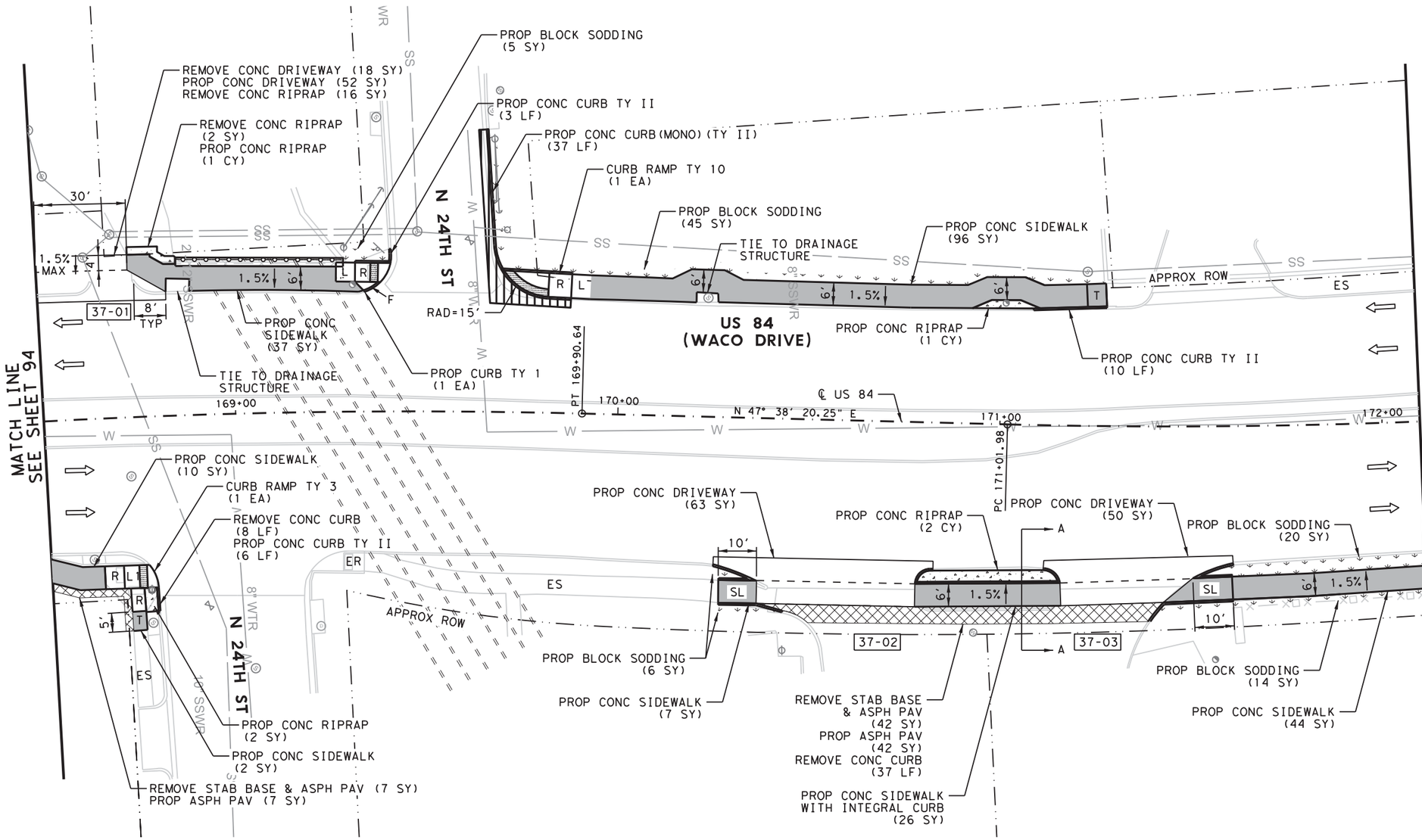

0' 15' 30'

SCALE

NOTES:

* FOR CONTRACTOR INFORMATION ONLY

1. LINEAR DIMENSIONS ARE TO THE BACK OF CURB.
2. RADII CALLOUTS ARE TO NOMINAL FACE OF CURB UNLESS NOTED OTHERWISE.
3. SIDEWALK CROSS SLOPE IS 1.5% USUAL. MAXIMUM ALLOWABLE CROSS SLOPE ON SIDEWALK IS 2.0%.
4. CONTRACTOR SHALL VERIFY ELEVATIONS AND DIMENSIONS IN THE FIELD PRIOR TO CONSTRUCTION.
5. THE INFORMATION SHOWN IN THESE PLANS CONCERNING TYPE AND LOCATION OF UTILITIES IS NOT GUARANTEED TO BE ACCURATE OR ALL INCLUSIVE. IT SHALL BE THE CONTRACTOR'S RESPONSIBILITY TO VERIFY AND LOCATE ALL EXISTING UTILITIES PRIOR TO CONSTRUCTION. THE CONTRACTOR WILL BE SOLELY RESPONSIBLE FOR ANY DAMAGES BY THEIR CONSTRUCTION OPERATIONS TO EXISTING UTILITIES.
6. REFER TO DRIVEWAY DETAILS, MISCELLANEOUS DETAILS, SIGNAL SHEETS, PAVEMENT MARKING SHEETS, SUMMARY OF SMALL SIGNS, AND TXDOT PED STANDARDS FOR ADDITIONAL INFORMATION.
7. PROPOSED SIGN LOCATIONS MAY BE ADJUSTED AS APPROVED BY THE ENGINEER.

SETH T. RUTHERFORD 129231 LICENSED PROFESSIONAL ENGINEER

03/01/2021

Kimley»Horn F-928

© 2021

Texas Department of Transportation

SPECIAL NOTES & DETAILS

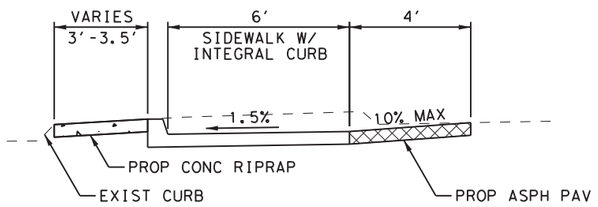

SECTION A-A

LEGEND

APPROX ROW	L1	LANDING COMMON	R	RAMP
ELECTRIC BOX/VAULT	LS	LEVEL SIDEWALK (2% MAX)		RIPRAP (CONC)
ES EXIST SIDEWALK	SL	LONGITUDINAL SLOPES MAY NOT EXCEED 5% & CROSS SLOPES MAY NOT EXCEED 2%		SAWCUT LINE
ER EXISTING RAMP				SIDEWALK WALL
FENCE	RAD	RADIUS		SIGN (EXISTING)
FIRE HYDRANT	Ⓢ	MANHOLE	XX-X	SIGN NUMBER
F FLARE		PED SIGNAL POLE (EXIST)		TRAFFIC FLOW
Ⓖ GAS METER	●	PED SIGNAL POLE (PROP)		TRAF SIGNAL POLE (EXIST)
GUY ANCHOR	ϕ	POWER/ILLUMINATION POLE		TRAF SIGNAL POLE (PROP)
HANDRAIL		PROPOSED ASPHALT PAVING	T	TRANSITION
L LANDING		PROPOSED CONCRETE PAVING		TREE/BUSHES
PROPOSED SMALL SIGN		PROPOSED SIDEWALK	Ⓦ	WATER METER

SIDEWALK LAYOUT

AT N 24TH ST

SHEET 37 OF 74

FED.RD. DIV.NO.	PROJECT ID.	HIGHWAY NO.
6	(SEE TITLE SHEET)	US 84

STATE	DIST.	COUNTY	SHEET NO.
TEXAS	WAC	MCLENNAN	95
CONT.	SECT.	JOB	
0055	15	072	

FILENAME: pw:\\kh-pw.bentley.com:kh-pw-01\Documents\01 Active Projects\TX-FTW-063586010 - US 84 (Waco Drive)\WAC 0055150724 - Design\Plan Set\3. Roadway\US84_RDW_SP37.dgn
PLOTTED: 12/21/2020

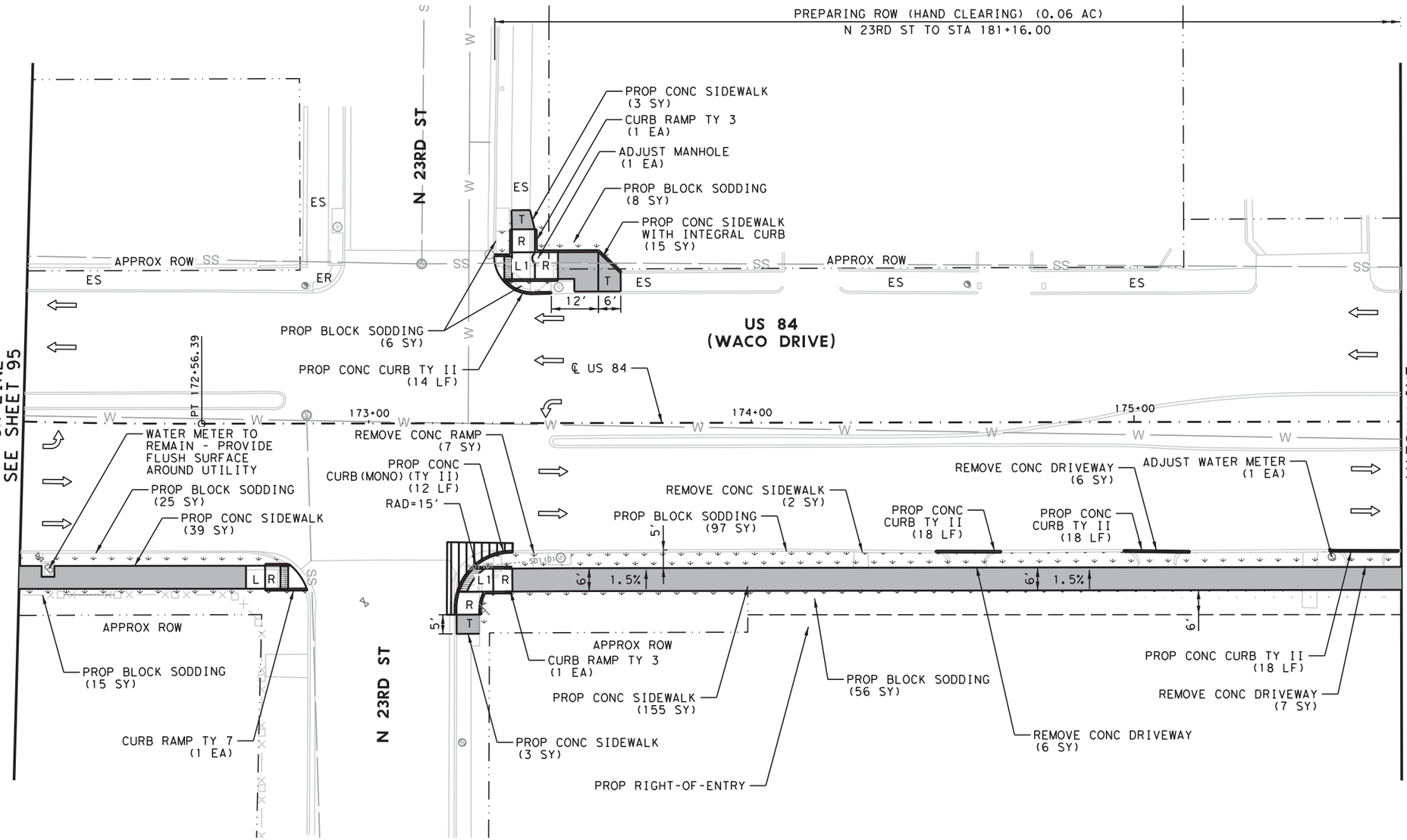

0' 15' 30'

SCALE

NOTES:

* FOR CONTRACTOR INFORMATION ONLY

1. LINEAR DIMENSIONS ARE TO THE BACK OF CURB.
2. RADII CALLOUTS ARE TO NOMINAL FACE OF CURB UNLESS NOTED OTHERWISE.
3. SIDEWALK CROSS SLOPE IS 1.5% USUAL. MAXIMUM ALLOWABLE CROSS SLOPE ON SIDEWALK IS 2.0%.
4. CONTRACTOR SHALL VERIFY ELEVATIONS AND DIMENSIONS IN THE FIELD PRIOR TO CONSTRUCTION.
5. THE INFORMATION SHOWN IN THESE PLANS CONCERNING TYPE AND LOCATION OF UTILITIES IS NOT GUARANTEED TO BE ACCURATE OR ALL INCLUSIVE. IT SHALL BE THE CONTRACTOR'S RESPONSIBILITY TO VERIFY AND LOCATE ALL EXISTING UTILITIES PRIOR TO CONSTRUCTION. THE CONTRACTOR WILL BE SOLELY RESPONSIBLE FOR ANY DAMAGES BY THEIR CONSTRUCTION OPERATIONS TO EXISTING UTILITIES.
6. REFER TO DRIVEWAY DETAILS, MISCELLANEOUS DETAILS, SIGNAL SHEETS, PAVEMENT MARKING SHEETS, SUMMARY OF SMALL SIGNS, AND TXDOT PED STANDARDS FOR ADDITIONAL INFORMATION.
7. PROPOSED SIGN LOCATIONS MAY BE ADJUSTED AS APPROVED BY THE ENGINEER.

03/01/2021

Kimley»Horn F-928

© 2021

Texas Department of Transportation

SPECIAL NOTES & DETAILS

LEGEND

APPROX ROW	L1	LANDING COMMON	R	RAMP
ELECTRIC BOX/VAULT	LS	LEVEL SIDEWALK (2% MAX)		RIPRAP (CONC)
ES EXIST SIDEWALK	SL	LONGITUDINAL SLOPES MAY NOT EXCEED 5% & CROSS SLOPES MAY NOT EXCEED 2%		SAWCUT LINE
ER EXISTING RAMP				SIDEWALK WALL
FENCE	RAD	RADIUS		SIGN (EXISTING)
FIRE HYDRANT	Ⓢ	MANHOLE	XX-X	SIGN NUMBER
F FLARE		PED SIGNAL POLE (EXIST)		TRAFFIC FLOW
Ⓖ GAS METER	●	PED SIGNAL POLE (PROP)		TRAF SIGNAL POLE (EXIST)
GUY ANCHOR	ϕ	POWER/ILLUMINATION POLE		TRAF SIGNAL POLE (PROP)
HANDRAIL		PROPOSED ASPHALT PAVING	T	TRANSITION
L LANDING		PROPOSED CONCRETE PAVING		TREE/BUSHES
PROPOSED SMALL SIGN		PROPOSED SIDEWALK	Ⓦ	WATER METER

SIDEWALK LAYOUT

AT N 23RD ST

SHEET 38 OF 74

FED.RD. DIV.NO.	PROJECT ID.	HIGHWAY NO.
6	(SEE TITLE SHEET)	US 84

STATE	DIST.	COUNTY	SHEET NO.
TEXAS	WAC	MCLENNAN	96
CONT.	SECT.	JOB	
0055	15	072	

FILENAME: pw:\\kh-pw.bentley.com:kh-pw-01\Documents\01 Active Projects\TX-FTW-063586010 - US 84 (Waco Drive)\WAC 0055150724 - Design\Plan Set\3. Roadway\US84_RDW_SP38.dgn
PLOTTED: 12/21/2020

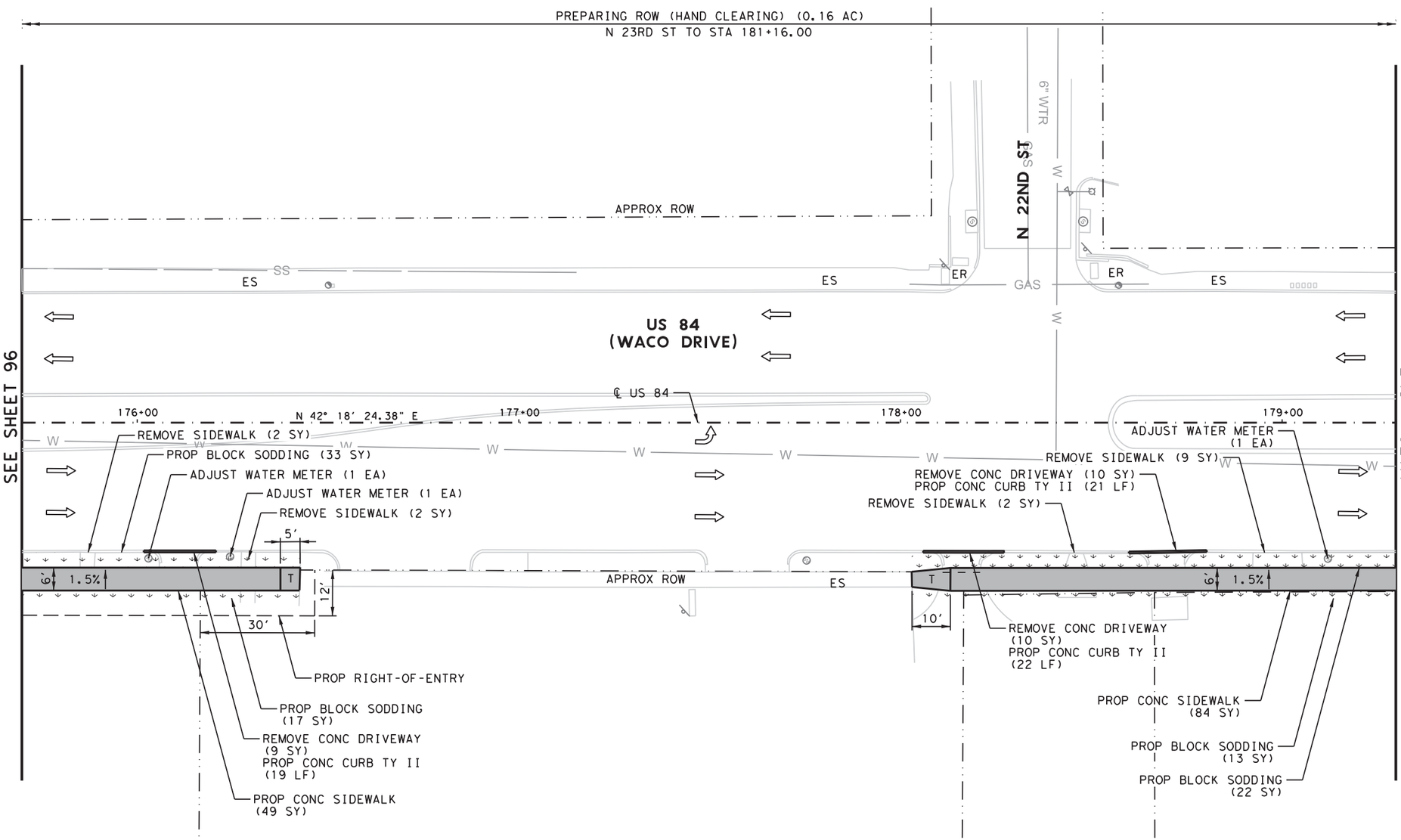

0' 15' 30'

SCALE

NOTES:

* FOR CONTRACTOR INFORMATION ONLY

1. LINEAR DIMENSIONS ARE TO THE BACK OF CURB.
2. RADII CALLOUTS ARE TO NOMINAL FACE OF CURB UNLESS NOTED OTHERWISE.
3. SIDEWALK CROSS SLOPE IS 1.5% USUAL. MAXIMUM ALLOWABLE CROSS SLOPE ON SIDEWALK IS 2.0%.
4. CONTRACTOR SHALL VERIFY ELEVATIONS AND DIMENSIONS IN THE FIELD PRIOR TO CONSTRUCTION.
5. THE INFORMATION SHOWN IN THESE PLANS CONCERNING TYPE AND LOCATION OF UTILITIES IS NOT GUARANTEED TO BE ACCURATE OR ALL INCLUSIVE. IT SHALL BE THE CONTRACTOR'S RESPONSIBILITY TO VERIFY AND LOCATE ALL EXISTING UTILITIES PRIOR TO CONSTRUCTION. THE CONTRACTOR WILL BE SOLELY RESPONSIBLE FOR ANY DAMAGES BY THEIR CONSTRUCTION OPERATIONS TO EXISTING UTILITIES.
6. REFER TO DRIVEWAY DETAILS, MISCELLANEOUS DETAILS, SIGNAL SHEETS, PAVEMENT MARKING SHEETS, SUMMARY OF SMALL SIGNS, AND TXDOT PED STANDARDS FOR ADDITIONAL INFORMATION.
7. PROPOSED SIGN LOCATIONS MAY BE ADJUSTED AS APPROVED BY THE ENGINEER.

STATE OF TEXAS — REGISTERED — 128021 — LICENSED — PROFESSIONAL ENGINEER

03/01/2021

Kimley»Horn F-928

© 2021

Texas Department of Transportation

SPECIAL NOTES & DETAILS

LEGEND

APPROX ROW	L1	LANDING COMMON	R	RAMP
ELECTRIC BOX/VAULT	LS	LEVEL SIDEWALK (2% MAX)		RIPRAP (CONC)
ES EXIST SIDEWALK	SL	LONGITUDINAL SLOPES MAY NOT EXCEED 5% & CROSS SLOPES MAY NOT EXCEED 2%		SAWCUT LINE
ER EXISTING RAMP				SIDEWALK WALL
FENCE	RAD	RADIUS		SIGN (EXISTING)
FIRE HYDRANT	Ⓢ	MANHOLE	XX-X	SIGN NUMBER
F FLARE		PED SIGNAL POLE (EXIST)		TRAFFIC FLOW
Ⓖ GAS METER	●	PED SIGNAL POLE (PROP)		TRAF SIGNAL POLE (EXIST)
GUY ANCHOR		POWER/ILLUMINATION POLE		TRAF SIGNAL POLE (PROP)
HANDRAIL		PROPOSED ASPHALT PAVING	T	TRANSITION
L LANDING		PROPOSED CONCRETE PAVING		TREE/BUSHES
PROPOSED SMALL SIGN		PROPOSED SIDEWALK	Ⓦ	WATER METER

SIDEWALK LAYOUT

AT N 22ND ST

SHEET 39 OF 74

FED. RD. DIV. NO.	PROJECT ID.	HIGHWAY NO.
6	(SEE TITLE SHEET)	US 84

STATE	DIST.	COUNTY	SHEET NO.
TEXAS	WAC	MCLENNAN	97
CONT.	SECT.	JOB	
0055	15	072	

FILENAME: pw:\\kh-pw.bentley.com:kh-pw-01\Documents\01 Active Projects\TX-FTW-063586010 - US 84 (Waco Drive)\WAC 0055150724 - Design\Plan Set\3. Roadway\US84_RDW_SP39.dgn
PLOTTED: 12/21/2020

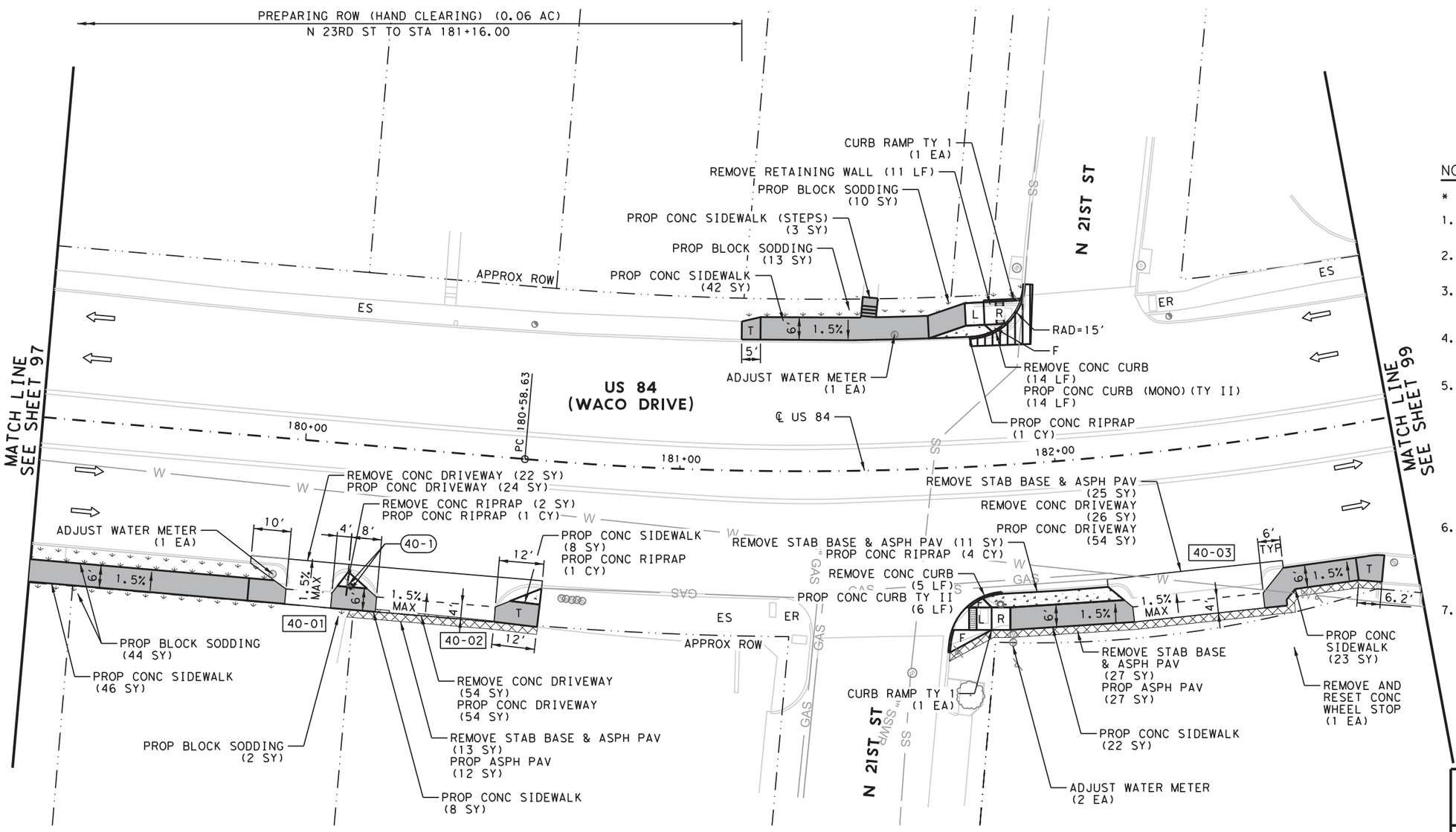

0' 15' 30'

SCALE

NOTES:

* FOR CONTRACTOR INFORMATION ONLY

1. LINEAR DIMENSIONS ARE TO THE BACK OF CURB.
2. RADII CALLOUTS ARE TO NOMINAL FACE OF CURB UNLESS NOTED OTHERWISE.
3. SIDEWALK CROSS SLOPE IS 1.5% USUAL. MAXIMUM ALLOWABLE CROSS SLOPE ON SIDEWALK IS 2.0%.
4. CONTRACTOR SHALL VERIFY ELEVATIONS AND DIMENSIONS IN THE FIELD PRIOR TO CONSTRUCTION.
5. THE INFORMATION SHOWN IN THESE PLANS CONCERNING TYPE AND LOCATION OF UTILITIES IS NOT GUARANTEED TO BE ACCURATE OR ALL INCLUSIVE. IT SHALL BE THE CONTRACTOR'S RESPONSIBILITY TO VERIFY AND LOCATE ALL EXISTING UTILITIES PRIOR TO CONSTRUCTION. THE CONTRACTOR WILL BE SOLELY RESPONSIBLE FOR ANY DAMAGES BY THEIR CONSTRUCTION OPERATIONS TO EXISTING UTILITIES.
6. REFER TO DRIVEWAY DETAILS, MISCELLANEOUS DETAILS, SIGNAL SHEETS, PAVEMENT MARKING SHEETS, SUMMARY OF SMALL SIGNS, AND TXDOT PED STANDARDS FOR ADDITIONAL INFORMATION.
7. PROPOSED SIGN LOCATIONS MAY BE ADJUSTED AS APPROVED BY THE ENGINEER.

STATE OF TEXAS
JOSEPH RUTH
103461
LICENSED
PROFESSIONAL ENGINEER

03/01/2021

Kimley»Horn F-928

© 2021

Texas Department of Transportation

SPECIAL NOTES & DETAILS

LEGEND

APPROX ROW	L1	LANDING COMMON	R	RAMP
ELECTRIC BOX/VAULT	LS	LEVEL SIDEWALK (2% MAX)		RIPRAP (CONC)
ES EXIST SIDEWALK	SL	LONGITUDINAL SLOPES MAY NOT EXCEED 5% & CROSS SLOPES MAY NOT EXCEED 2%		SAWCUT LINE
ER EXISTING RAMP				SIDEWALK WALL
FENCE	RAD	RADIUS		SIGN (EXISTING)
FIRE HYDRANT	Ⓢ	MANHOLE	XX-X	SIGN NUMBER
F FLARE		PED SIGNAL POLE (EXIST)		TRAFFIC FLOW
Ⓖ GAS METER	●	PED SIGNAL POLE (PROP)		TRAF SIGNAL POLE (EXIST)
GUY ANCHOR		POWER/ILLUMINATION POLE		TRAF SIGNAL POLE (PROP)
HANDRAIL		PROPOSED ASPHALT PAVING	T	TRANSITION
L LANDING		PROPOSED CONCRETE PAVING		TREE/BUSHES
PROPOSED SMALL SIGN		PROPOSED SIDEWALK	Ⓦ	WATER METER

SIDEWALK LAYOUT

AT N 21ST ST

SHEET 40 OF 74

FED. RD. DIV. NO.	PROJECT ID.	HIGHWAY NO.
6	(SEE TITLE SHEET)	US 84

STATE	DIST.	COUNTY	SHEET NO.
TEXAS	WAC	MCLENNAN	98
CONT.	SECT.	JOB	
0055	15	072	

FILENAME: pw:\\kh-pw.bentley.com:kh-pw-01\Documents\01 Active Projects\TX-FTW-063586010 - US 84 (Waco Drive)\WAC 0055150724 - Design\Plan Set\3. Roadway\US84_RDW_SP40.dgn
PLOTTED: 12/21/2020

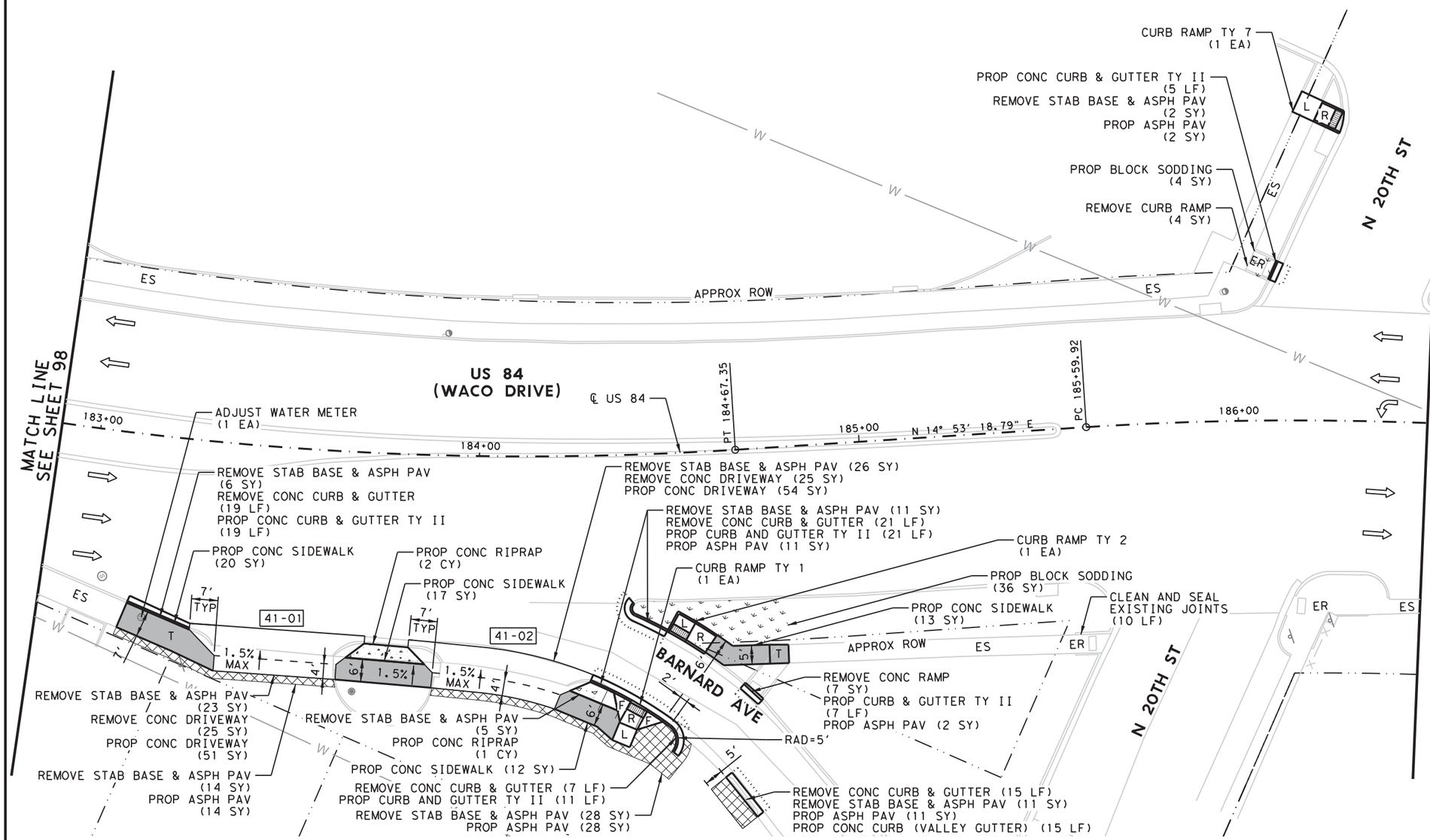

NOTES:

* FOR CONTRACTOR INFORMATION ONLY

1. LINEAR DIMENSIONS ARE TO THE BACK OF CURB.
2. RADII CALLOUTS ARE TO NOMINAL FACE OF CURB UNLESS NOTED OTHERWISE.
3. SIDEWALK CROSS SLOPE IS 1.5% USUAL. MAXIMUM ALLOWABLE CROSS SLOPE ON SIDEWALK IS 2.0%.
4. CONTRACTOR SHALL VERIFY ELEVATIONS AND DIMENSIONS IN THE FIELD PRIOR TO CONSTRUCTION.
5. THE INFORMATION SHOWN IN THESE PLANS CONCERNING TYPE AND LOCATION OF UTILITIES IS NOT GUARANTEED TO BE ACCURATE OR ALL INCLUSIVE. IT SHALL BE THE CONTRACTOR'S RESPONSIBILITY TO VERIFY AND LOCATE ALL EXISTING UTILITIES PRIOR TO CONSTRUCTION. THE CONTRACTOR WILL BE SOLELY RESPONSIBLE FOR ANY DAMAGES BY THEIR CONSTRUCTION OPERATIONS TO EXISTING UTILITIES.
6. REFER TO DRIVEWAY DETAILS, MISCELLANEOUS DETAILS, SIGNAL SHEETS, PAVEMENT MARKING SHEETS, SUMMARY OF SMALL SIGNS, AND TXDOT PED STANDARDS FOR ADDITIONAL INFORMATION.
7. PROPOSED SIGN LOCATIONS MAY BE ADJUSTED AS APPROVED BY THE ENGINEER.

STATE OF TEXAS — REGISTERED — JOSEPH C. RUTH — 129021 — LICENSED — PROFESSIONAL ENGINEER

03/01/2021

Kimley»Horn F-928

© 2021

Texas Department of Transportation

SPECIAL NOTES & DETAILS

LEGEND

APPROX ROW	L1	LANDING COMMON	R	RAMP
ELECTRIC BOX/VAULT	LS	LEVEL SIDEWALK (2% MAX)		RIPRAP (CONC)
ES EXIST SIDEWALK	SL	LONGITUDINAL SLOPES MAY NOT EXCEED 5% & CROSS SLOPES MAY NOT EXCEED 2%		SAWCUT LINE
ER EXISTING RAMP				SIDEWALK WALL
FENCE	RAD	RADIUS		SIGN (EXISTING)
FIRE HYDRANT	Ⓢ	MANHOLE	XX-X	SIGN NUMBER
F FLARE		PED SIGNAL POLE (EXIST)		TRAFFIC FLOW
Ⓖ GAS METER	●	PED SIGNAL POLE (PROP)		TRAF SIGNAL POLE (EXIST)
GUY ANCHOR		POWER/ILLUMINATION POLE		TRAF SIGNAL POLE (PROP)
HANDRAIL		PROPOSED ASPHALT PAVING	T	TRANSITION
L LANDING		PROPOSED CONCRETE PAVING		TREE/BUSHES
PROPOSED SMALL SIGN		PROPOSED SIDEWALK	Ⓦ	WATER METER

SIDEWALK LAYOUT

AT N 20TH ST

SHEET 41 OF 74

FED. RD. DIV. NO.	PROJECT ID.	HIGHWAY NO.
6	(SEE TITLE SHEET)	US 84

STATE	DIST.	COUNTY	SHEET NO.
TEXAS	WAC	MCLENNAN	99
CONT.	SECT.	JOB	
0055	15	072	

FILENAME: pw:\\kh-pw.bentley.com:kh-pw-01\Documents\01 Active Projects\TX-FTW-063586010 - US 84 (Waco Drive)\WAC 0055150724 - Design\Plan Set\3. Roadway\US84_RDW_SP41.dgn
PLOTTED: 12/21/2020

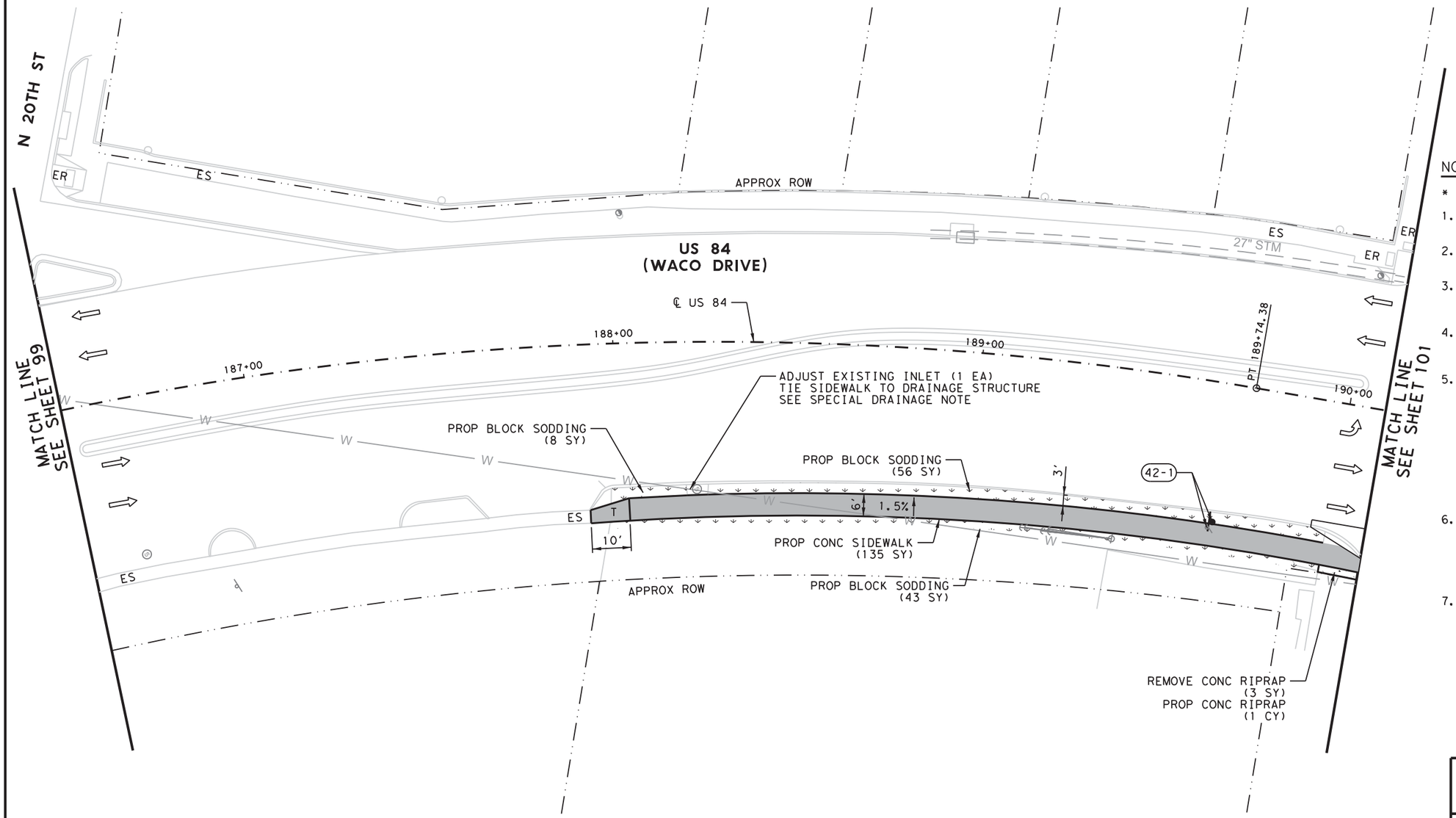

NOTES:

* FOR CONTRACTOR INFORMATION ONLY

1. LINEAR DIMENSIONS ARE TO THE BACK OF CURB.
2. RADII CALLOUTS ARE TO NOMINAL FACE OF CURB UNLESS NOTED OTHERWISE.
3. SIDEWALK CROSS SLOPE IS 1.5% USUAL. MAXIMUM ALLOWABLE CROSS SLOPE ON SIDEWALK IS 2.0%.
4. CONTRACTOR SHALL VERIFY ELEVATIONS AND DIMENSIONS IN THE FIELD PRIOR TO CONSTRUCTION.
5. THE INFORMATION SHOWN IN THESE PLANS CONCERNING TYPE AND LOCATION OF UTILITIES IS NOT GUARANTEED TO BE ACCURATE OR ALL INCLUSIVE. IT SHALL BE THE CONTRACTOR'S RESPONSIBILITY TO VERIFY AND LOCATE ALL EXISTING UTILITIES PRIOR TO CONSTRUCTION. THE CONTRACTOR WILL BE SOLELY RESPONSIBLE FOR ANY DAMAGES BY THEIR CONSTRUCTION OPERATIONS TO EXISTING UTILITIES.
6. REFER TO DRIVEWAY DETAILS, MISCELLANEOUS DETAILS, SIGNAL SHEETS, PAVEMENT MARKING SHEETS, SUMMARY OF SMALL SIGNS, AND TXDOT PED STANDARDS FOR ADDITIONAL INFORMATION.
7. PROPOSED SIGN LOCATIONS MAY BE ADJUSTED AS APPROVED BY THE ENGINEER.

0' 15' 30'
SCALE

03/01/2021

Kimley»Horn F-928

© 2021
Texas Department of Transportation

SPECIAL NOTES & DETAILS

SPECIAL DRAINAGE NOTE

REMOVE AND REBUILD EXISTING INLET TOP PER ITEM 479.3.1. MATCH EXISTING ELEVATIONS. REFER TO EXISTING CURB INLET DETAILS (TYPE E1) FOR ADDITIONAL INFORMATION.

LEGEND

APPROX ROW	L1	LANDING COMMON	R	RAMP
ELECTRIC BOX/VAULT	LS	LEVEL SIDEWALK (2% MAX)		RIPRAP (CONC)
ES EXIST SIDEWALK	SL	LONGITUDINAL SLOPES MAY NOT EXCEED 5% & CROSS SLOPES MAY NOT EXCEED 2%		SAWCUT LINE
ER EXISTING RAMP				SIDEWALK WALL
FENCE	RAD	RADIUS		SIGN (EXISTING)
FIRE HYDRANT	Ⓢ	MANHOLE	XX-X	SIGN NUMBER
F FLARE		PED SIGNAL POLE (EXIST)		TRAFFIC FLOW
Ⓖ GAS METER	●	PED SIGNAL POLE (PROP)		TRAF SIGNAL POLE (EXIST)
GUY ANCHOR		POWER/ILLUMINATION POLE		TRAF SIGNAL POLE (PROP)
HANDRAIL		PROPOSED ASPHALT PAVING	T	TRANSITION
L LANDING		PROPOSED CONCRETE PAVING		TREE/BUSHES
PROPOSED SMALL SIGN		PROPOSED SIDEWALK	Ⓦ	WATER METER

SIDEWALK LAYOUT

BETWEEN N 20TH ST
AND N 19TH ST

SHEET 42 OF 74

FED.RD. DIV.NO.	PROJECT ID.	HIGHWAY NO.
6	(SEE TITLE SHEET)	US 84

STATE	DIST.	COUNTY	SHEET NO.
TEXAS	WAC	MCLENNAN	100
CONT.	SECT.	JOB	
0055	15	072	

FILENAME: pw:\\kh-pw.bentley.com:kh-pw-01\Documents\01 Active Projects\TX-FTW-063586010 - US 84 (Waco Drive)\WAC 0055150724 - Design\Plan Set\3. Roadway\US84_RDW_SP42.dgn
PLOTTED: 12/21/2020

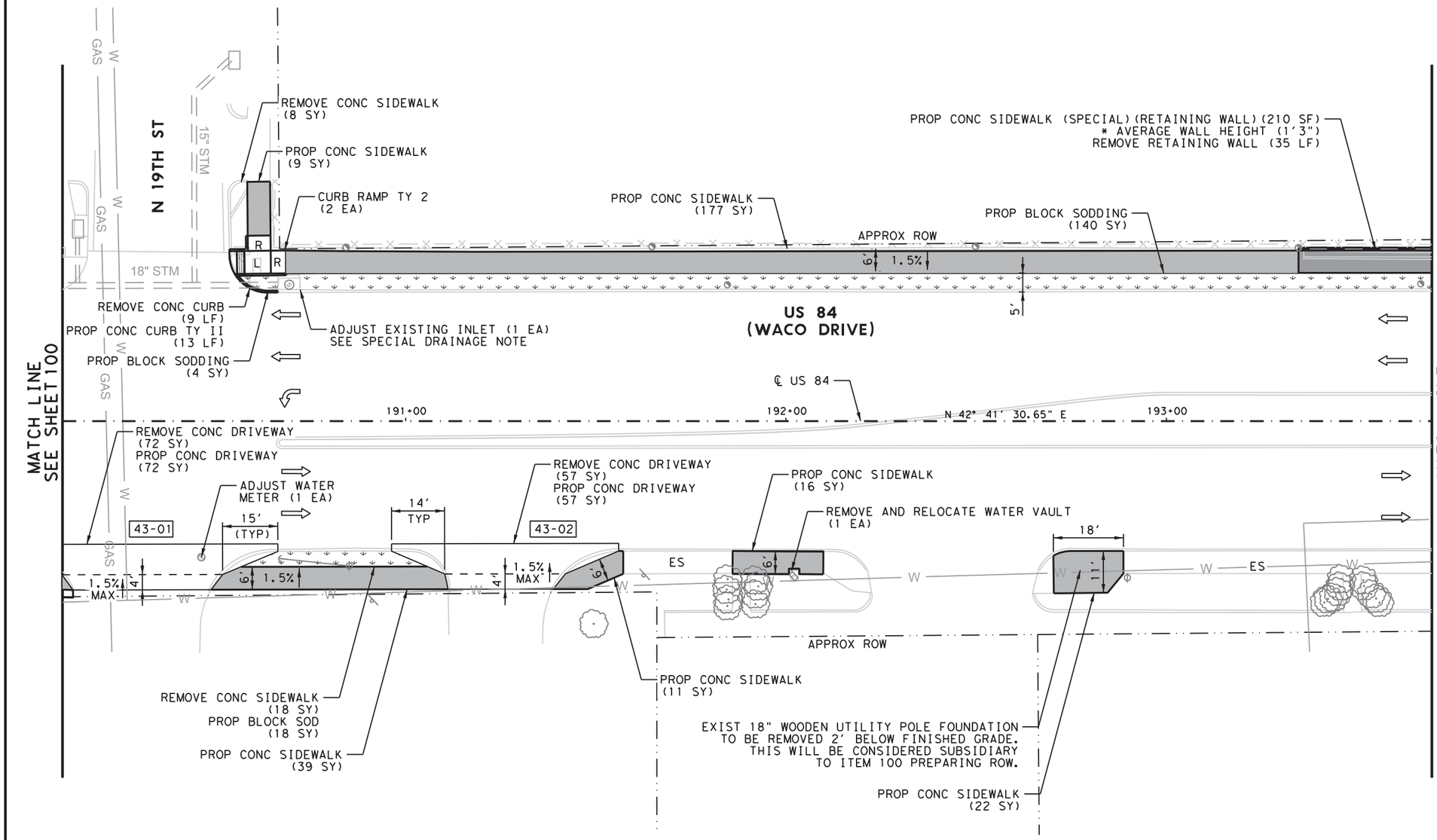

0' 15' 30'

SCALE

NOTES:

* FOR CONTRACTOR INFORMATION ONLY

1. LINEAR DIMENSIONS ARE TO THE BACK OF CURB.
2. RADII CALLOUTS ARE TO NOMINAL FACE OF CURB UNLESS NOTED OTHERWISE.
3. SIDEWALK CROSS SLOPE IS 1.5% USUAL. MAXIMUM ALLOWABLE CROSS SLOPE ON SIDEWALK IS 2.0%.
4. CONTRACTOR SHALL VERIFY ELEVATIONS AND DIMENSIONS IN THE FIELD PRIOR TO CONSTRUCTION.
5. THE INFORMATION SHOWN IN THESE PLANS CONCERNING TYPE AND LOCATION OF UTILITIES IS NOT GUARANTEED TO BE ACCURATE OR ALL INCLUSIVE. IT SHALL BE THE CONTRACTOR'S RESPONSIBILITY TO VERIFY AND LOCATE ALL EXISTING UTILITIES PRIOR TO CONSTRUCTION. THE CONTRACTOR WILL BE SOLELY RESPONSIBLE FOR ANY DAMAGES BY THEIR CONSTRUCTION OPERATIONS TO EXISTING UTILITIES.
6. REFER TO DRIVEWAY DETAILS, MISCELLANEOUS DETAILS, SIGNAL SHEETS, PAVEMENT MARKING SHEETS, SUMMARY OF SMALL SIGNS, AND TXDOT PED STANDARDS FOR ADDITIONAL INFORMATION.
7. PROPOSED SIGN LOCATIONS MAY BE ADJUSTED AS APPROVED BY THE ENGINEER.

03/01/2021

Kimley»Horn F-928

© 2021

Texas Department of Transportation

SPECIAL NOTES & DETAILS

RETAINING WALL DETAIL

NTS

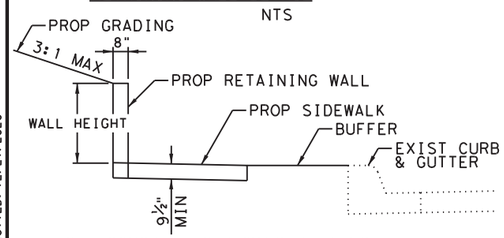

SEE CONCRETE SIDEWALK DETAILS FOR ADDITIONAL WALL AND SIDEWALK INFORMATION.

SPECIAL DRAINAGE NOTE

REMOVE AND REBUILD EXISTING INLET TOP PER ITEM 479.3.1. MATCH EXISTING ELEVATIONS. REFER TO EXISTING CURB INLET DETAILS (TYPE E1) FOR ADDITIONAL INFORMATION.

LEGEND

APPROX ROW	L1	LANDING COMMON	R	RAMP
ELECTRIC BOX/VAULT	LS	LEVEL SIDEWALK (2% MAX)		RIPRAP (CONC)
ES EXIST SIDEWALK	SL	LONGITUDINAL SLOPES MAY NOT EXCEED 5% & CROSS SLOPES MAY NOT EXCEED 2%		SAWCUT LINE
ER EXISTING RAMP				SIDEWALK WALL
FENCE	RAD	RADIUS		SIGN (EXISTING)
FIRE HYDRANT	Ⓢ	MANHOLE	XX-X	SIGN NUMBER
F FLARE		PED SIGNAL POLE (EXIST)		TRAFFIC FLOW
Ⓖ GAS METER	●	PED SIGNAL POLE (PROP)		TRAF SIGNAL POLE (EXIST)
GUY ANCHOR		POWER/ILLUMINATION POLE		TRAF SIGNAL POLE (PROP)
HANDRAIL		PROPOSED ASPHALT PAVING	T	TRANSITION
L LANDING		PROPOSED CONCRETE PAVING		TREE/BUSHES
PROPOSED SMALL SIGN		PROPOSED SIDEWALK	Ⓦ	WATER METER

SIDEWALK LAYOUT

AT N 19TH ST

SHEET 43 OF 74

FED.RD. DIV.NO.	PROJECT ID.	HIGHWAY NO.
6	(SEE TITLE SHEET)	US 84

STATE	DIST.	COUNTY	SHEET NO.
TEXAS	WAC	MCLENNAN	101
CONT.	SECT.	JOB	
0055	15	072	

FILENAME: pw:\\kh-pw.bentley.com:kh-pw-01\Documents\01 Active Projects\TX-FTW-063586010 - US 84 (Waco Drive)\WAC 005515072\4 - Design\Plan Set\3. Roadway\US84_RDW_SP43.dgn
PLOTTED: 12/21/2020

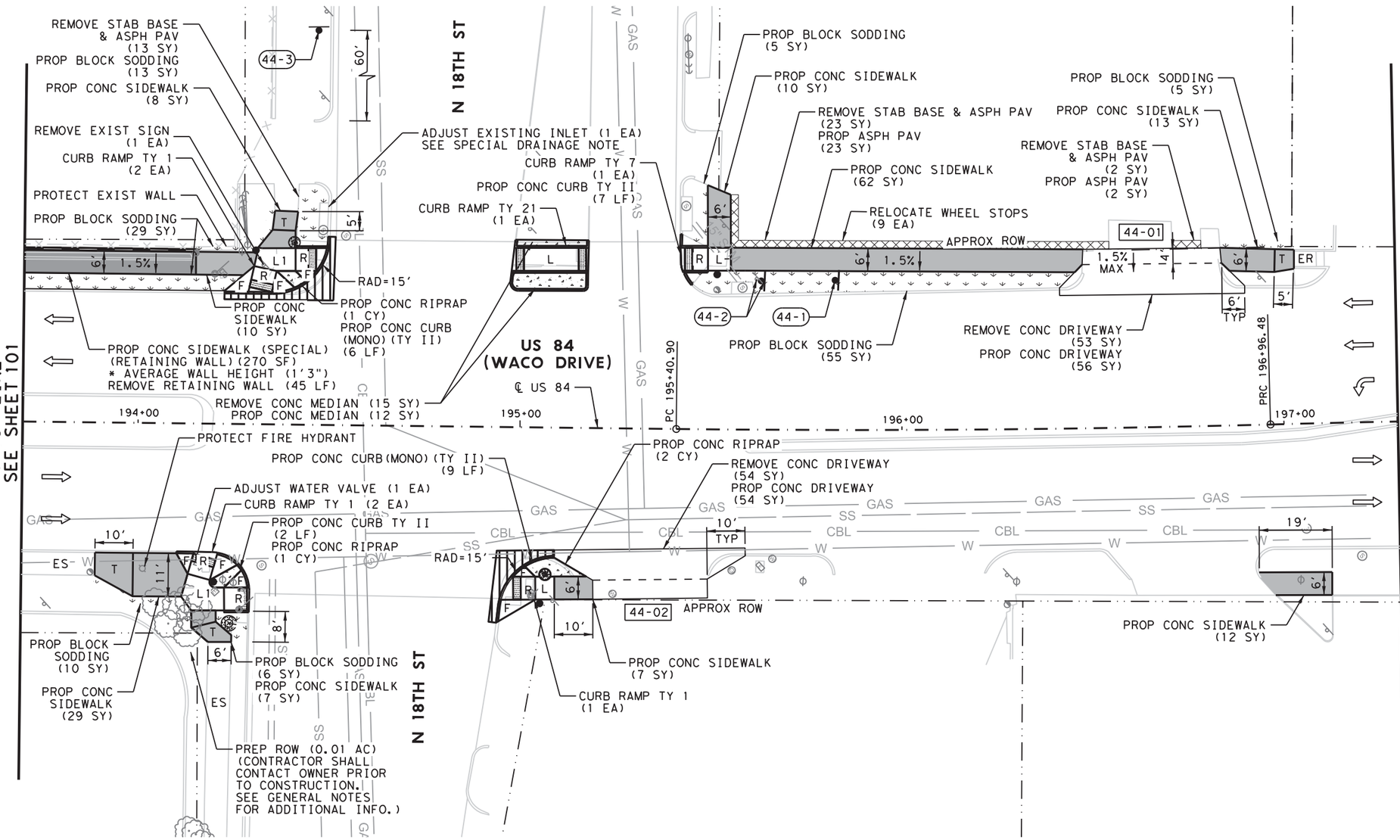

NOTES:

* FOR CONTRACTOR INFORMATION ONLY

1. LINEAR DIMENSIONS ARE TO THE BACK OF CURB.
2. RADII CALLOUTS ARE TO NOMINAL FACE OF CURB UNLESS NOTED OTHERWISE.
3. SIDEWALK CROSS SLOPE IS 1.5% USUAL. MAXIMUM ALLOWABLE CROSS SLOPE ON SIDEWALK IS 2.0%.
4. CONTRACTOR SHALL VERIFY ELEVATIONS AND DIMENSIONS IN THE FIELD PRIOR TO CONSTRUCTION.
5. THE INFORMATION SHOWN IN THESE PLANS CONCERNING TYPE AND LOCATION OF UTILITIES IS NOT GUARANTEED TO BE ACCURATE OR ALL INCLUSIVE. IT SHALL BE THE CONTRACTOR'S RESPONSIBILITY TO VERIFY AND LOCATE ALL EXISTING UTILITIES PRIOR TO CONSTRUCTION. THE CONTRACTOR WILL BE SOLELY RESPONSIBLE FOR ANY DAMAGES BY THEIR CONSTRUCTION OPERATIONS TO EXISTING UTILITIES.
6. REFER TO DRIVEWAY DETAILS, MISCELLANEOUS DETAILS, SIGNAL SHEETS, PAVEMENT MARKING SHEETS, SUMMARY OF SMALL SIGNS, AND TXDOT PED STANDARDS FOR ADDITIONAL INFORMATION.
7. PROPOSED SIGN LOCATIONS MAY BE ADJUSTED AS APPROVED BY THE ENGINEER.

03/01/2021

Kimley»Horn F-928

© 2021

Texas Department of Transportation

SPECIAL NOTES & DETAILS

RETAINING WALL DETAIL

NTS

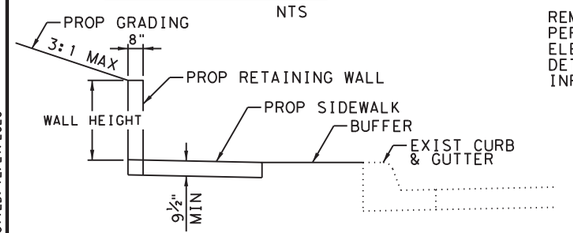

SEE CONCRETE SIDEWALK DETAILS FOR ADDITIONAL WALL AND SIDEWALK INFORMATION.

SPECIAL DRAINAGE NOTE

REMOVE AND REBUILD EXISTING INLET TOP PER ITEM 479.3.1. MATCH EXISTING ELEVATIONS. REFER TO EXISTING CURB INLET DETAILS (TYPE E1) FOR ADDITIONAL INFORMATION.

LEGEND

APPROX ROW	L1	LANDING COMMON	R	RAMP
ELECTRIC BOX/VAULT	LS	LEVEL SIDEWALK (2% MAX)	RIPRAP (CONC)
ES	EXIST SIDEWALK	SL	LONGITUDINAL SLOPES MAY NOT EXCEED 5% & CROSS SLOPES MAY NOT EXCEED 2%	SAWCUT LINE
ER	EXISTING RAMP		SIDEWALK WALL
FENCE	RAD	RADIUS	SIGN (EXISTING)
FIRE HYDRANT	Ⓢ	MANHOLE	XX-X	SIGN NUMBER
F	FLARE		PED SIGNAL POLE (EXIST)		TRAFFIC FLOW
Ⓖ	GAS METER	●	PED SIGNAL POLE (PROP)		TRAF SIGNAL POLE (EXIST)
GUY ANCHOR	ϕ	POWER/ILLUMINATION POLE		TRAF SIGNAL POLE (PROP)
HANDRAIL		PROPOSED ASPHALT PAVING	T	TRANSITION
L	LANDING		PROPOSED CONCRETE PAVING		TREE/BUSHES
PROPOSED SMALL SIGN		PROPOSED SIDEWALK	Ⓦ	WATER METER

SIDEWALK LAYOUT

AT N 18TH ST

SHEET 44 OF 74

FED. RD. DIV. NO.	PROJECT ID.	HIGHWAY NO.
6	(SEE TITLE SHEET)	US 84

STATE	DIST.	COUNTY	SHEET NO.
TEXAS	WAC	MCLENNAN	102
CONT.	SECT.	JOB	
0055	15	072	

FILENAME: pw:\\kh-pw.bentley.com:kh-pw-01\Documents\01 Active Projects\TX-FTW-063586010 - US 84 (Waco Drive)\WAC 0055150721\4 - Design\Plan Set\3. Roadway\US84_RDW_SP44.dgn
PLOTTED: 12/21/2020

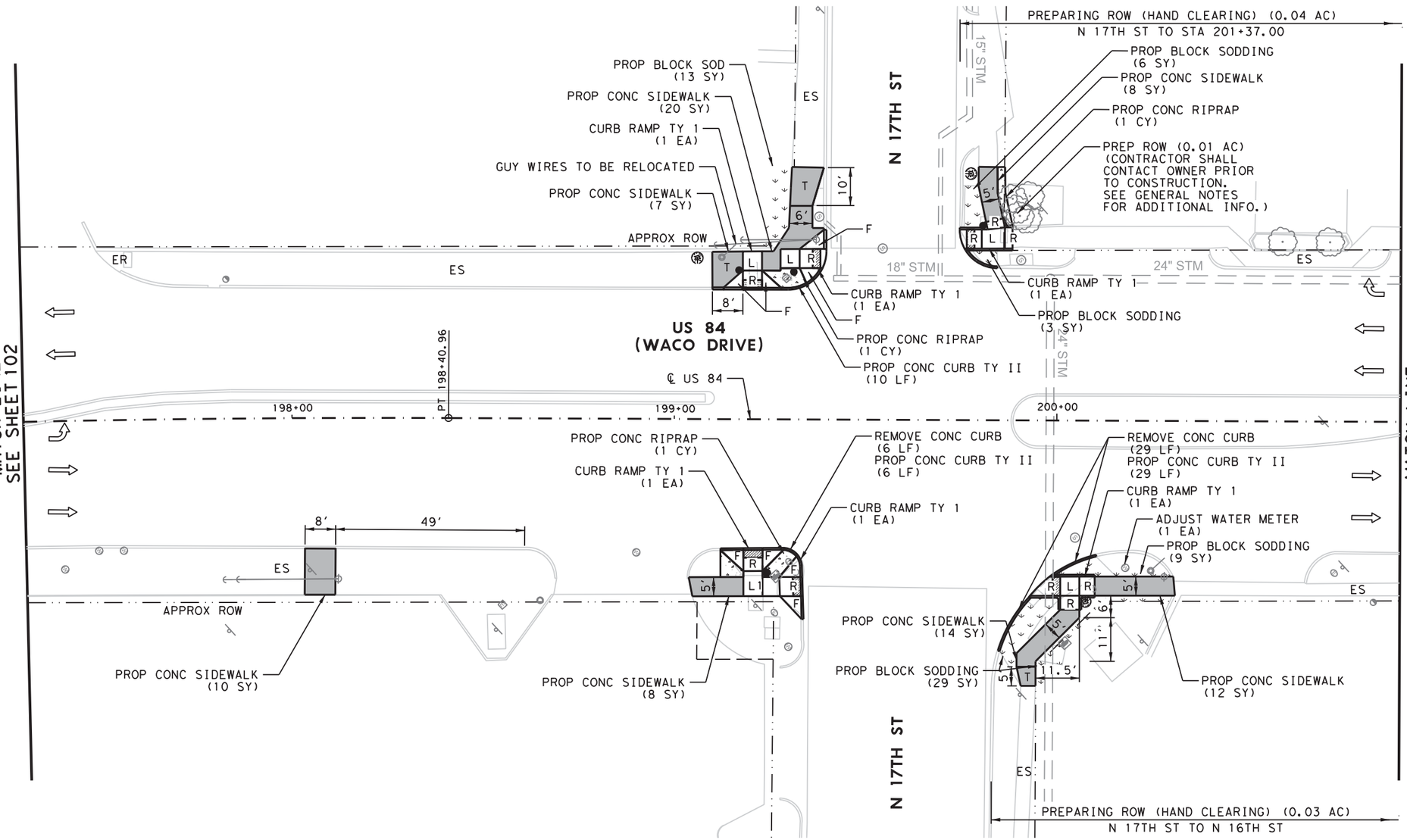

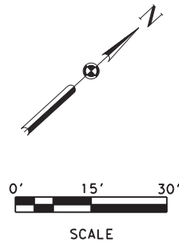

NOTES:

* FOR CONTRACTOR INFORMATION ONLY

1. LINEAR DIMENSIONS ARE TO THE BACK OF CURB.
2. RADII CALLOUTS ARE TO NOMINAL FACE OF CURB UNLESS NOTED OTHERWISE.
3. SIDEWALK CROSS SLOPE IS 1.5% USUAL. MAXIMUM ALLOWABLE CROSS SLOPE ON SIDEWALK IS 2.0%.
4. CONTRACTOR SHALL VERIFY ELEVATIONS AND DIMENSIONS IN THE FIELD PRIOR TO CONSTRUCTION.
5. THE INFORMATION SHOWN IN THESE PLANS CONCERNING TYPE AND LOCATION OF UTILITIES IS NOT GUARANTEED TO BE ACCURATE OR ALL INCLUSIVE. IT SHALL BE THE CONTRACTOR'S RESPONSIBILITY TO VERIFY AND LOCATE ALL EXISTING UTILITIES PRIOR TO CONSTRUCTION. THE CONTRACTOR WILL BE SOLELY RESPONSIBLE FOR ANY DAMAGES BY THEIR CONSTRUCTION OPERATIONS TO EXISTING UTILITIES.
6. REFER TO DRIVEWAY DETAILS, MISCELLANEOUS DETAILS, SIGNAL SHEETS, PAVEMENT MARKING SHEETS, SUMMARY OF SMALL SIGNS, AND TXDOT PED STANDARDS FOR ADDITIONAL INFORMATION.
7. PROPOSED SIGN LOCATIONS MAY BE ADJUSTED AS APPROVED BY THE ENGINEER.

03/01/2021

Kimley»Horn F-928

© 2021

Texas Department of Transportation

SPECIAL NOTES & DETAILS

LEGEND

APPROX ROW	L1	LANDING COMMON	R	RAMP
ELECTRIC BOX/VAULT	LS	LEVEL SIDEWALK (2% MAX)		RIPRAP (CONC)
ES EXIST SIDEWALK	SL	LONGITUDINAL SLOPES MAY NOT EXCEED 5% & CROSS SLOPES MAY NOT EXCEED 2%		SAWCUT LINE
ER EXISTING RAMP				SIDEWALK WALL
FENCE	RAD	RADIUS		SIGN (EXISTING)
FIRE HYDRANT	Ⓢ	MANHOLE	XX-X	SIGN NUMBER
F FLARE		PED SIGNAL POLE (EXIST)		TRAFFIC FLOW
Ⓖ GAS METER	●	PED SIGNAL POLE (PROP)		TRAF SIGNAL POLE (EXIST)
GUY ANCHOR		POWER/ILLUMINATION POLE		TRAF SIGNAL POLE (PROP)
HANDRAIL		PROPOSED ASPHALT PAVING	T	TRANSITION
L LANDING		PROPOSED CONCRETE PAVING		TREE/BUSHES
PROPOSED SMALL SIGN		PROPOSED SIDEWALK	Ⓦ	WATER METER

SIDEWALK LAYOUT

AT N 17TH ST

SHEET 45 OF 74

FED.RD. DIV.NO.	PROJECT ID.	HIGHWAY NO.
6	(SEE TITLE SHEET)	US 84

STATE	DIST.	COUNTY	SHEET NO.
TEXAS	WAC	MCLENNAN	103
CONT.	SECT.	JOB	
0055	15	072	

FILENAME: pw:\\kh-pw.bentley.com:kh-pw-01\Documents\01 Active Projects\TX-FTW-063586010 - US 84 (Waco Drive)\WAC 0055150724 - Design\Plan Set\3. Roadway\US84_RDW_SP45.dgn
PLOTTED: 12/21/2020

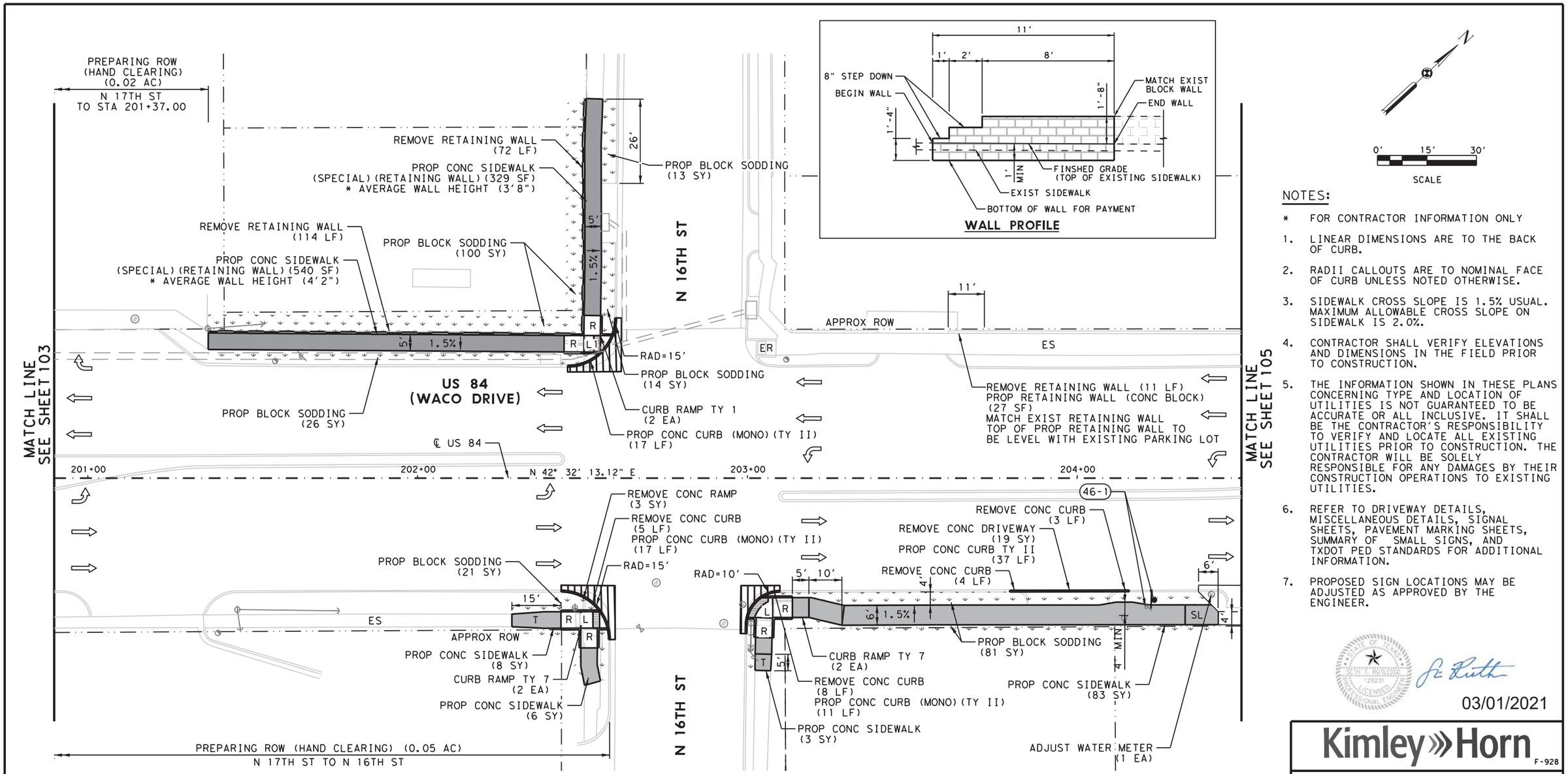

NOTES:

* FOR CONTRACTOR INFORMATION ONLY

1. LINEAR DIMENSIONS ARE TO THE BACK OF CURB.
2. RADII CALLOUTS ARE TO NOMINAL FACE OF CURB UNLESS NOTED OTHERWISE.
3. SIDEWALK CROSS SLOPE IS 1.5% USUAL. MAXIMUM ALLOWABLE CROSS SLOPE ON SIDEWALK IS 2.0%.
4. CONTRACTOR SHALL VERIFY ELEVATIONS AND DIMENSIONS IN THE FIELD PRIOR TO CONSTRUCTION.
5. THE INFORMATION SHOWN IN THESE PLANS CONCERNING TYPE AND LOCATION OF UTILITIES IS NOT GUARANTEED TO BE ACCURATE OR ALL INCLUSIVE. IT SHALL BE THE CONTRACTOR'S RESPONSIBILITY TO VERIFY AND LOCATE ALL EXISTING UTILITIES PRIOR TO CONSTRUCTION. THE CONTRACTOR WILL BE SOLELY RESPONSIBLE FOR ANY DAMAGES BY THEIR CONSTRUCTION OPERATIONS TO EXISTING UTILITIES.
6. REFER TO DRIVEWAY DETAILS, MISCELLANEOUS DETAILS, SIGNAL SHEETS, PAVEMENT MARKING SHEETS, SUMMARY OF SMALL SIGNS, AND TXDOT PED STANDARDS FOR ADDITIONAL INFORMATION.
7. PROPOSED SIGN LOCATIONS MAY BE ADJUSTED AS APPROVED BY THE ENGINEER.

03/01/2021

Kimley»Horn F-928

© 2021

Texas Department of Transportation

SPECIAL NOTES & DETAILS

RETAINING WALL DETAIL
NTS

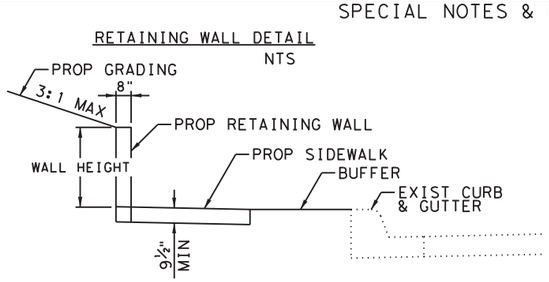

SEE CONCRETE SIDEWALK DETAILS FOR ADDITIONAL WALL AND SIDEWALK INFORMATION.

LEGEND

APPROX ROW	L1	LANDING COMMON	R	RAMP
ELECTRIC BOX/VAULT	LS	LEVEL SIDEWALK (2% MAX)		RIPRAP (CONC)
ES	EXIST SIDEWALK	SL	LONGITUDINAL SLOPES MAY NOT EXCEED 5% & CROSS SLOPES MAY NOT EXCEED 2%		SAWCUT LINE
ER	EXISTING RAMP				SIDEWALK WALL
FENCE	RAD	RADIUS		SIGN (EXISTING)
FIRE HYDRANT	Ⓢ	MANHOLE	XX-X	SIGN NUMBER
F	FLARE		PED SIGNAL POLE (EXIST)		TRAFFIC FLOW
G	GAS METER		PED SIGNAL POLE (PROP)		TRAF SIGNAL POLE (EXIST)
GUY ANCHOR		POWER/ILLUMINATION POLE		TRAF SIGNAL POLE (PROP)
HANDRAIL		PROPOSED ASPHALT PAVING	T	TRANSITION
L	LANDING		PROPOSED CONCRETE PAVING		TREE/BUSHES
PROPOSED SMALL SIGN		PROPOSED SIDEWALK	W	WATER METER

SIDEWALK LAYOUT

AT N 16TH ST

SHEET 46 OF 74

FED.RD. DIV.NO.	PROJECT ID.	HIGHWAY NO.
6	(SEE TITLE SHEET)	US 84

STATE	DIST.	COUNTY	SHEET NO.
TEXAS	WAC	MCLENNAN	104
CONT.	SECT.	JOB	
0055	15	072	

FILENAME: pw:\\kh-pw.bentley.com:kh-pw-01\Documents\01 Active Projects\TX-FTW-063586010 - US 84 (Waco Drive)\WAC 0055150724 - Design\Plan Set\3. Roadway\US84_RDW_SP46.dgn
PLOTTED: 12/21/2020

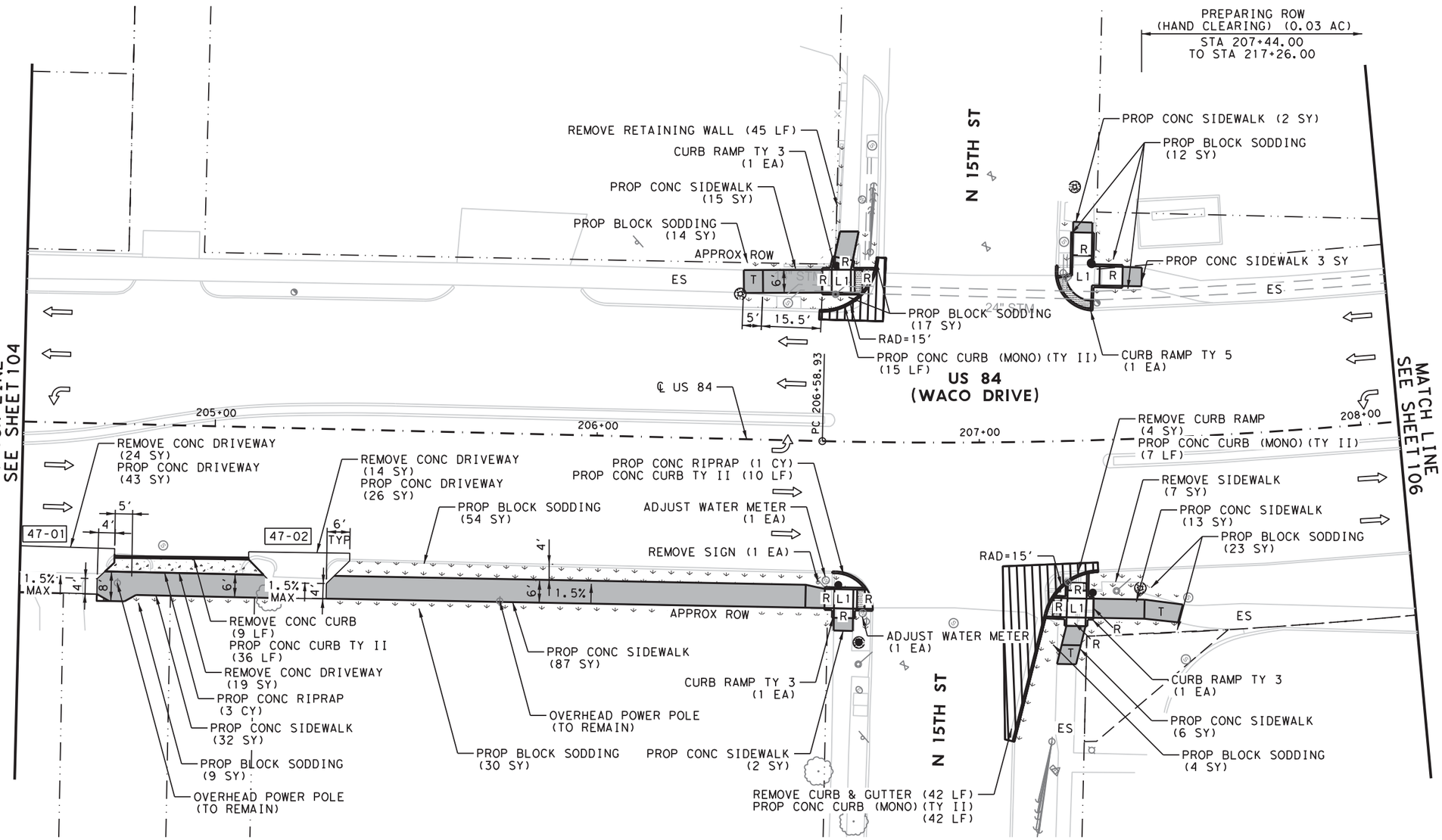

0' 15' 30'

SCALE

NOTES:

* FOR CONTRACTOR INFORMATION ONLY

1. LINEAR DIMENSIONS ARE TO THE BACK OF CURB.
2. RADII CALLOUTS ARE TO NOMINAL FACE OF CURB UNLESS NOTED OTHERWISE.
3. SIDEWALK CROSS SLOPE IS 1.5% USUAL. MAXIMUM ALLOWABLE CROSS SLOPE ON SIDEWALK IS 2.0%.
4. CONTRACTOR SHALL VERIFY ELEVATIONS AND DIMENSIONS IN THE FIELD PRIOR TO CONSTRUCTION.
5. THE INFORMATION SHOWN IN THESE PLANS CONCERNING TYPE AND LOCATION OF UTILITIES IS NOT GUARANTEED TO BE ACCURATE OR ALL INCLUSIVE. IT SHALL BE THE CONTRACTOR'S RESPONSIBILITY TO VERIFY AND LOCATE ALL EXISTING UTILITIES PRIOR TO CONSTRUCTION. THE CONTRACTOR WILL BE SOLELY RESPONSIBLE FOR ANY DAMAGES BY THEIR CONSTRUCTION OPERATIONS TO EXISTING UTILITIES.
6. REFER TO DRIVEWAY DETAILS, MISCELLANEOUS DETAILS, SIGNAL SHEETS, PAVEMENT MARKING SHEETS, SUMMARY OF SMALL SIGNS, AND TXDOT PED STANDARDS FOR ADDITIONAL INFORMATION.
7. PROPOSED SIGN LOCATIONS MAY BE ADJUSTED AS APPROVED BY THE ENGINEER.

STATE OF TEXAS
JOSEPH R. RUTH
103601
LICENSED
PROFESSIONAL ENGINEER

03/01/2021

Kimley»Horn F-928

© 2021

Texas Department of Transportation

SPECIAL NOTES & DETAILS

LEGEND

APPROX ROW	L1	LANDING COMMON	R	RAMP
ELECTRIC BOX/VAULT	LS	LEVEL SIDEWALK (2% MAX)	RIPRAP (CONC)	
ES	EXIST SIDEWALK	SL	LONGITUDINAL SLOPES MAY NOT EXCEED 5% & CROSS SLOPES MAY NOT EXCEED 2%	SAWCUT LINE	
ER	EXISTING RAMP			SIDEWALK WALL	
FENCE	RAD	RADIUS	SIGN (EXISTING)	
FIRE HYDRANT	MANHOLE	SIGN NUMBER	
F	FLARE	PED SIGNAL POLE (EXIST)	TRAFFIC FLOW	
GAS METER	PED SIGNAL POLE (PROP)	TRAF SIGNAL POLE (EXIST)	
GUY ANCHOR	POWER/ILLUMINATION POLE	TRAF SIGNAL POLE (PROP)	
HANDRAIL	PROPOSED ASPHALT PAVING	T	TRANSITION
L	LANDING	PROPOSED CONCRETE PAVING	TREE/BUSHES	
PROPOSED SMALL SIGN	PROPOSED SIDEWALK	WATER METER	

SIDEWALK LAYOUT

AT N 15TH ST

SHEET 47 OF 74

FED. RD. DIV. NO.	PROJECT ID.	HIGHWAY NO.
6	(SEE TITLE SHEET)	US 84

STATE	DIST.	COUNTY	SHEET NO.
TEXAS	WAC	MCLENNAN	105
CONT.	SECT.	JOB	
0055	15	072	

FILENAME: pw:\\kh-pw.bentley.com:kh-pw-01\Documents\01 Active Projects\TX-FTW-063586010 - US 84 (Waco Drive)\WAC 0055150724 - Design\Plan Set\3. Roadway\US84_RDW_SP47.dgn
PLOTTED: 12/21/2020

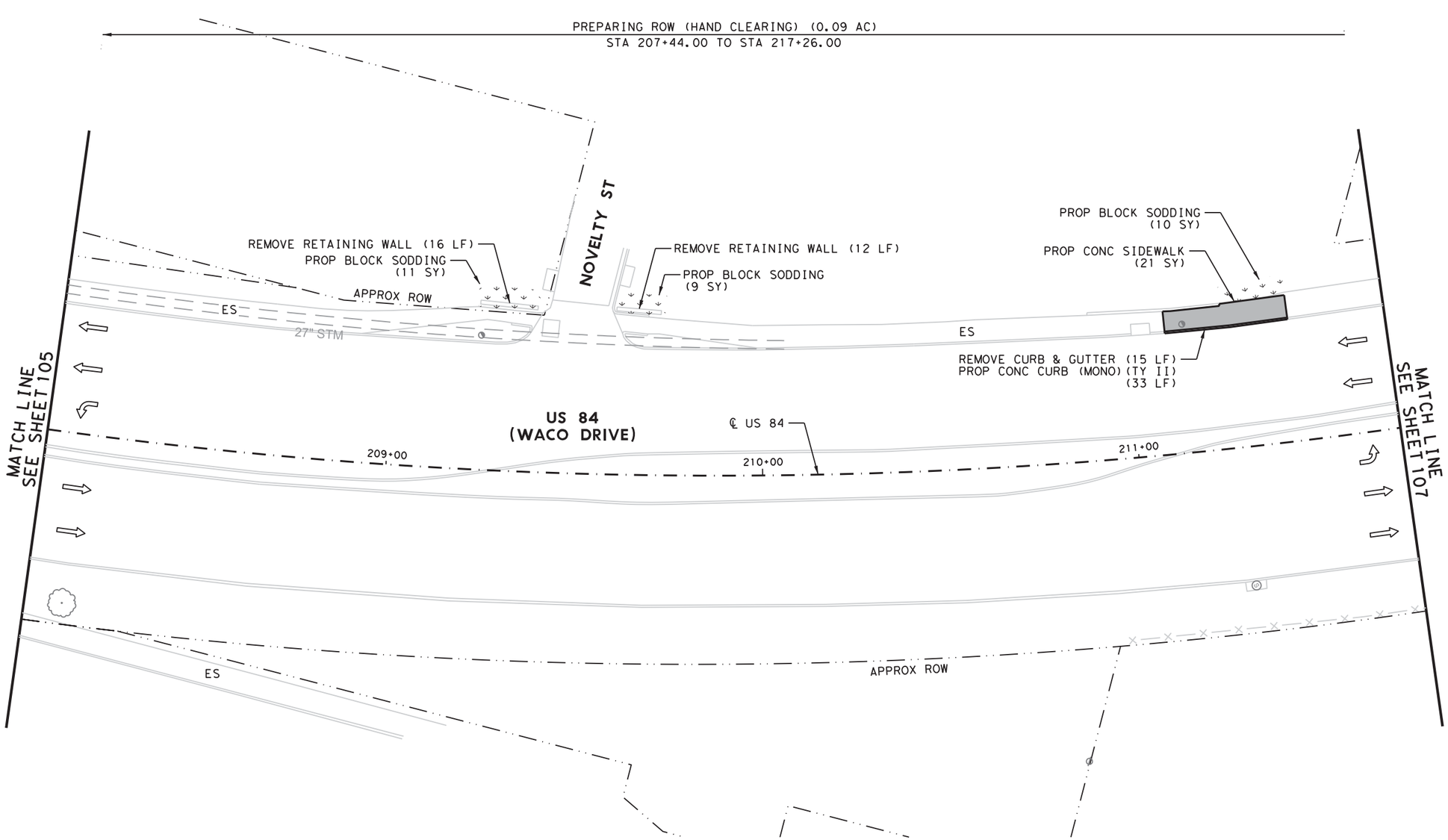

0' 15' 30'

SCALE

NOTES:

* FOR CONTRACTOR INFORMATION ONLY

1. LINEAR DIMENSIONS ARE TO THE BACK OF CURB.
2. RADII CALLOUTS ARE TO NOMINAL FACE OF CURB UNLESS NOTED OTHERWISE.
3. SIDEWALK CROSS SLOPE IS 1.5% USUAL. MAXIMUM ALLOWABLE CROSS SLOPE ON SIDEWALK IS 2.0%.
4. CONTRACTOR SHALL VERIFY ELEVATIONS AND DIMENSIONS IN THE FIELD PRIOR TO CONSTRUCTION.
5. THE INFORMATION SHOWN IN THESE PLANS CONCERNING TYPE AND LOCATION OF UTILITIES IS NOT GUARANTEED TO BE ACCURATE OR ALL INCLUSIVE. IT SHALL BE THE CONTRACTOR'S RESPONSIBILITY TO VERIFY AND LOCATE ALL EXISTING UTILITIES PRIOR TO CONSTRUCTION. THE CONTRACTOR WILL BE SOLELY RESPONSIBLE FOR ANY DAMAGES BY THEIR CONSTRUCTION OPERATIONS TO EXISTING UTILITIES.
6. REFER TO DRIVEWAY DETAILS, MISCELLANEOUS DETAILS, SIGNAL SHEETS, PAVEMENT MARKING SHEETS, SUMMARY OF SMALL SIGNS, AND TXDOT PED STANDARDS FOR ADDITIONAL INFORMATION.
7. PROPOSED SIGN LOCATIONS MAY BE ADJUSTED AS APPROVED BY THE ENGINEER.

SETH T. RUTHERFORD 129231 LICENSED PROFESSIONAL ENGINEER

03/01/2021

Kimley»Horn F-928

© 2021

Texas Department of Transportation

SPECIAL NOTES & DETAILS

LEGEND

APPROX ROW	L1	LANDING COMMON	R	RAMP
ELECTRIC BOX/VAULT	LS	LEVEL SIDEWALK (2% MAX)		RIPRAP (CONC)
ES EXIST SIDEWALK	SL	LONGITUDINAL SLOPES MAY NOT EXCEED 5% & CROSS SLOPES MAY NOT EXCEED 2%		SAWCUT LINE
ER EXISTING RAMP				SIDEWALK WALL
FENCE	RAD	RADIUS		SIGN (EXISTING)
FIRE HYDRANT	Ⓢ	MANHOLE	XX-X	SIGN NUMBER
F FLARE		PED SIGNAL POLE (EXIST)		TRAFFIC FLOW
Ⓖ GAS METER	●	PED SIGNAL POLE (PROP)		TRAF SIGNAL POLE (EXIST)
GUY ANCHOR	ϕ	POWER/ILLUMINATION POLE		TRAF SIGNAL POLE (PROP)
HANDRAIL		PROPOSED ASPHALT PAVING	T	TRANSITION
L LANDING		PROPOSED CONCRETE PAVING		TREE/BUSHES
PROPOSED SMALL SIGN		PROPOSED SIDEWALK	Ⓦ	WATER METER

SIDEWALK LAYOUT

AT NOVELTY ST

SHEET 48 OF 74

FED.RD. DIV.NO.	PROJECT ID.	HIGHWAY NO.
6	(SEE TITLE SHEET)	US 84

STATE	DIST.	COUNTY	SHEET NO.
TEXAS	WAC	MCLENNAN	106
CONT.	SECT.	JOB	
0055	15	072	

FILENAME: pw:\\kh-pw.bentley.com:kh-pw-01\Documents\01 Active Projects\TX-FTW-063586010 - US 84 (Waco Drive)\WAC 0055150724 - Design\Plan Set\3. Roadway\US84_RDW_SP47A.dgn
PLOTTED: 12/21/2020

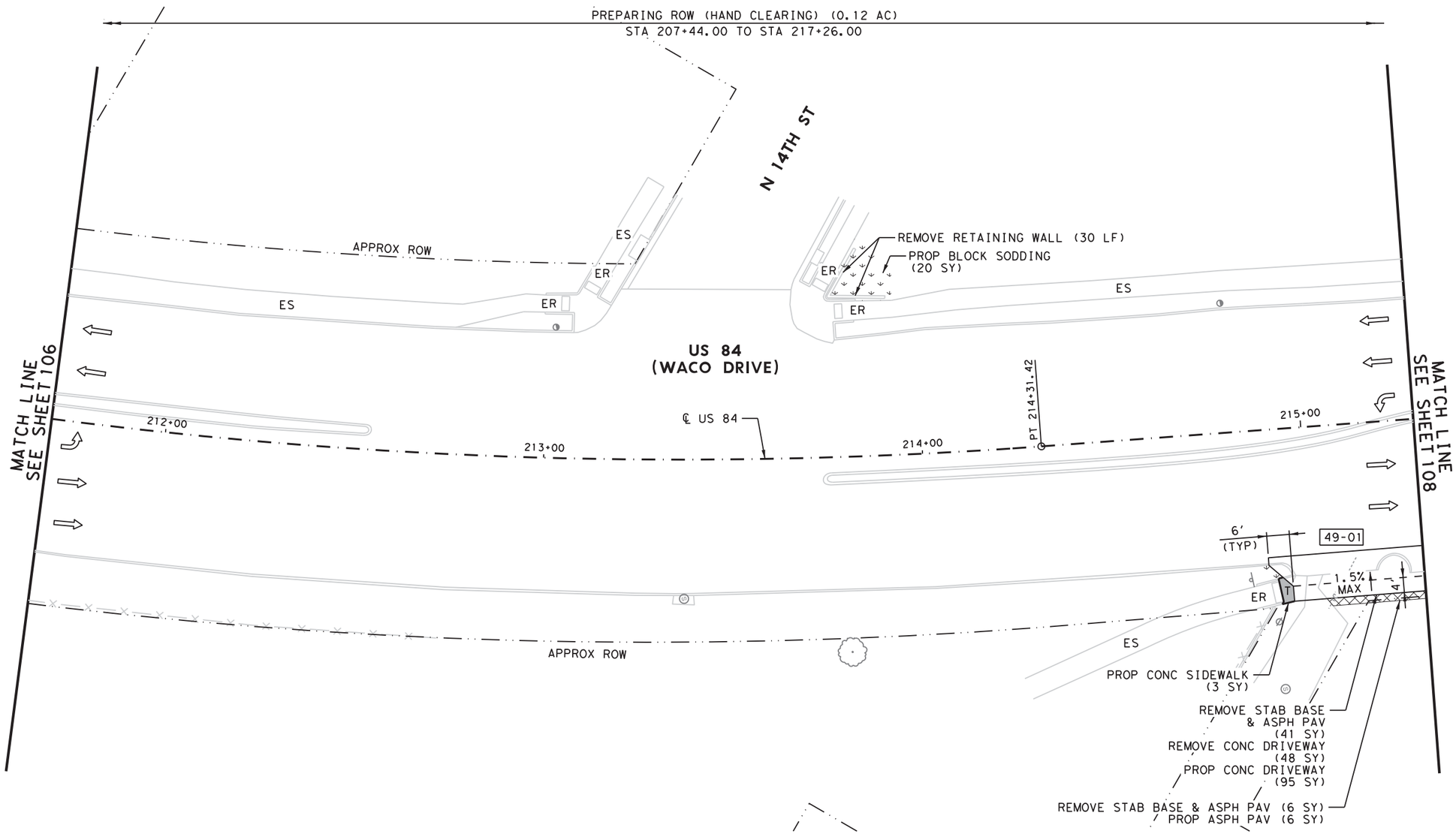

0' 15' 30'

SCALE

NOTES:

* FOR CONTRACTOR INFORMATION ONLY

1. LINEAR DIMENSIONS ARE TO THE BACK OF CURB.
2. RADII CALLOUTS ARE TO NOMINAL FACE OF CURB UNLESS NOTED OTHERWISE.
3. SIDEWALK CROSS SLOPE IS 1.5% USUAL. MAXIMUM ALLOWABLE CROSS SLOPE ON SIDEWALK IS 2.0%.
4. CONTRACTOR SHALL VERIFY ELEVATIONS AND DIMENSIONS IN THE FIELD PRIOR TO CONSTRUCTION.
5. THE INFORMATION SHOWN IN THESE PLANS CONCERNING TYPE AND LOCATION OF UTILITIES IS NOT GUARANTEED TO BE ACCURATE OR ALL INCLUSIVE. IT SHALL BE THE CONTRACTOR'S RESPONSIBILITY TO VERIFY AND LOCATE ALL EXISTING UTILITIES PRIOR TO CONSTRUCTION. THE CONTRACTOR WILL BE SOLELY RESPONSIBLE FOR ANY DAMAGES BY THEIR CONSTRUCTION OPERATIONS TO EXISTING UTILITIES.
6. REFER TO DRIVEWAY DETAILS, MISCELLANEOUS DETAILS, SIGNAL SHEETS, PAVEMENT MARKING SHEETS, SUMMARY OF SMALL SIGNS, AND TXDOT PED STANDARDS FOR ADDITIONAL INFORMATION.
7. PROPOSED SIGN LOCATIONS MAY BE ADJUSTED AS APPROVED BY THE ENGINEER.

03/01/2021

Kimley»Horn F-928

© 2021

Texas Department of Transportation

SPECIAL NOTES & DETAILS

LEGEND

APPROX ROW	L1	LANDING COMMON	R	RAMP
ELECTRIC BOX/VAULT	LS	LEVEL SIDEWALK (2% MAX)		RIPRAP (CONC)
ES EXIST SIDEWALK	SL	LONGITUDINAL SLOPES MAY NOT EXCEED 5% & CROSS SLOPES MAY NOT EXCEED 2%		SAWCUT LINE
ER EXISTING RAMP				SIDEWALK WALL
FENCE	RAD	RADIUS		SIGN (EXISTING)
FIRE HYDRANT	Ⓢ	MANHOLE	XX-X	SIGN NUMBER
F FLARE		PED SIGNAL POLE (EXIST)		TRAFFIC FLOW
Ⓖ GAS METER	●	PED SIGNAL POLE (PROP)		TRAF SIGNAL POLE (EXIST)
GUY ANCHOR		POWER/ILLUMINATION POLE		TRAF SIGNAL POLE (PROP)
HANDRAIL		PROPOSED ASPHALT PAVING	T	TRANSITION
L LANDING		PROPOSED CONCRETE PAVING		TREE/BUSHES
PROPOSED SMALL SIGN		PROPOSED SIDEWALK	Ⓦ	WATER METER

SIDEWALK LAYOUT

AT N 14TH ST

SHEET 49 OF 74

FED.RD. DIV.NO.	PROJECT ID.	HIGHWAY NO.
6	(SEE TITLE SHEET)	US 84

STATE	DIST.	COUNTY	SHEET NO.
TEXAS	WAC	MCLENNAN	107
CONT.	SECT.	JOB	
0055	15	072	

FILENAME: pw:\\kh-pw.bentley.com:kh-pw-01\Documents\01 Active Projects\TX-FTW-063586010 - US 84 (Waco Drive)\WAC 005515072\4 - Design\Plan Set\3. Roadway\US84_RDW_SP48.dgn
PLOTTED: 12/21/2020

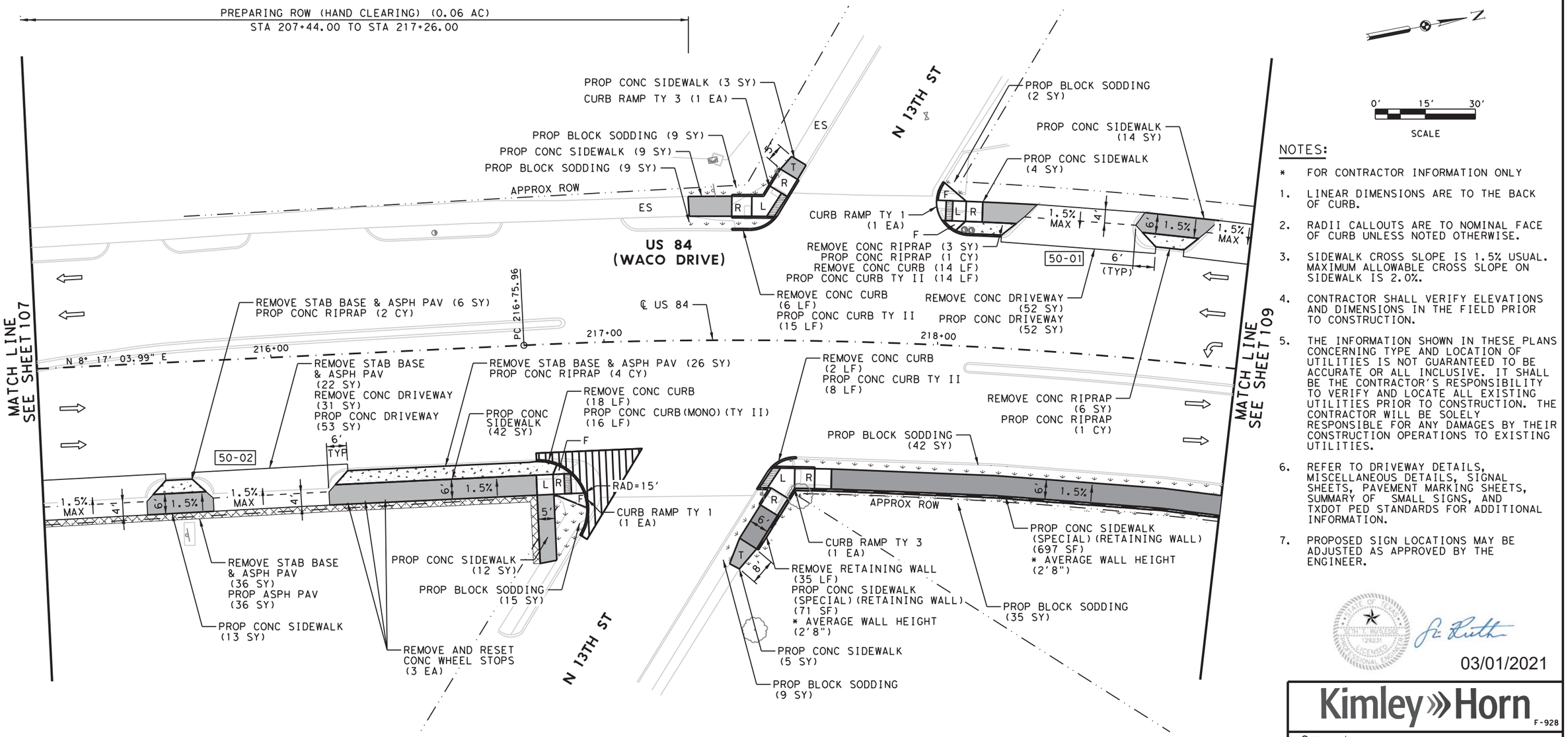

NOTES:

* FOR CONTRACTOR INFORMATION ONLY

1. LINEAR DIMENSIONS ARE TO THE BACK OF CURB.
2. RADII CALLOUTS ARE TO NOMINAL FACE OF CURB UNLESS NOTED OTHERWISE.
3. SIDEWALK CROSS SLOPE IS 1.5% USUAL. MAXIMUM ALLOWABLE CROSS SLOPE ON SIDEWALK IS 2.0%.
4. CONTRACTOR SHALL VERIFY ELEVATIONS AND DIMENSIONS IN THE FIELD PRIOR TO CONSTRUCTION.
5. THE INFORMATION SHOWN IN THESE PLANS CONCERNING TYPE AND LOCATION OF UTILITIES IS NOT GUARANTEED TO BE ACCURATE OR ALL INCLUSIVE. IT SHALL BE THE CONTRACTOR'S RESPONSIBILITY TO VERIFY AND LOCATE ALL EXISTING UTILITIES PRIOR TO CONSTRUCTION. THE CONTRACTOR WILL BE SOLELY RESPONSIBLE FOR ANY DAMAGES BY THEIR CONSTRUCTION OPERATIONS TO EXISTING UTILITIES.
6. REFER TO DRIVEWAY DETAILS, MISCELLANEOUS DETAILS, SIGNAL SHEETS, PAVEMENT MARKING SHEETS, SUMMARY OF SMALL SIGNS, AND TXDOT PED STANDARDS FOR ADDITIONAL INFORMATION.
7. PROPOSED SIGN LOCATIONS MAY BE ADJUSTED AS APPROVED BY THE ENGINEER.

03/01/2021

Kimley»Horn F-928

© 2021

Texas Department of Transportation

SPECIAL NOTES & DETAILS

RETAINING WALL DETAIL
NTS

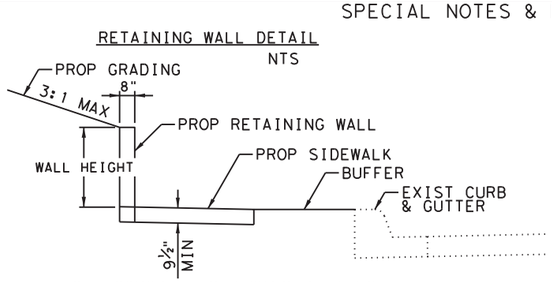

SEE CONCRETE SIDEWALK DETAILS FOR ADDITIONAL WALL AND SIDEWALK INFORMATION.

LEGEND

APPROX ROW	L1	LANDING COMMON	R	RAMP
ELECTRIC BOX/VAULT	LS	LEVEL SIDEWALK (2% MAX)	RIPRAP (CONC)
ES	EXIST SIDEWALK	SL	LONGITUDINAL SLOPES MAY NOT EXCEED 5% & CROSS SLOPES MAY NOT EXCEED 2%	SAWCUT LINE
ER	EXISTING RAMP			SIDEWALK WALL
FENCE	RAD	RADIUS	SIGN (EXISTING)
FIRE HYDRANT	MANHOLE	SIGN NUMBER
F	FLARE	PED SIGNAL POLE (EXIST)	TRAFFIC FLOW
GAS METER	PED SIGNAL POLE (PROP)	TRAF SIGNAL POLE (EXIST)
GUY ANCHOR	POWER/ILLUMINATION POLE	TRAF SIGNAL POLE (PROP)
HANDRAIL	PROPOSED ASPHALT PAVING	T	TRANSITION
L	LANDING	PROPOSED CONCRETE PAVING	TREE/BUSHES
PROPOSED SMALL SIGN	PROPOSED SIDEWALK	WATER METER

SIDEWALK LAYOUT

AT N 13TH ST

SHEET 50 OF 74

FED. RD. DIV. NO.	PROJECT ID.	HIGHWAY NO.
6	(SEE TITLE SHEET)	US 84

STATE	DIST.	COUNTY	SHEET NO.
TEXAS	WAC	MCLENNAN	108
CONT.	SECT.	JOB	
0055	15	072	

FILENAME: pw:\\kh-pw.bentley.com:kh-pw-01\Documents\01 Active Projects\TX-FTW-063586010 - US 84 (Waco Drive)\WAC 0055150724 - Design\Plan Set\3. Roadway\US84_RDW_SP49.dgn
PLOTTED: 12/21/2020

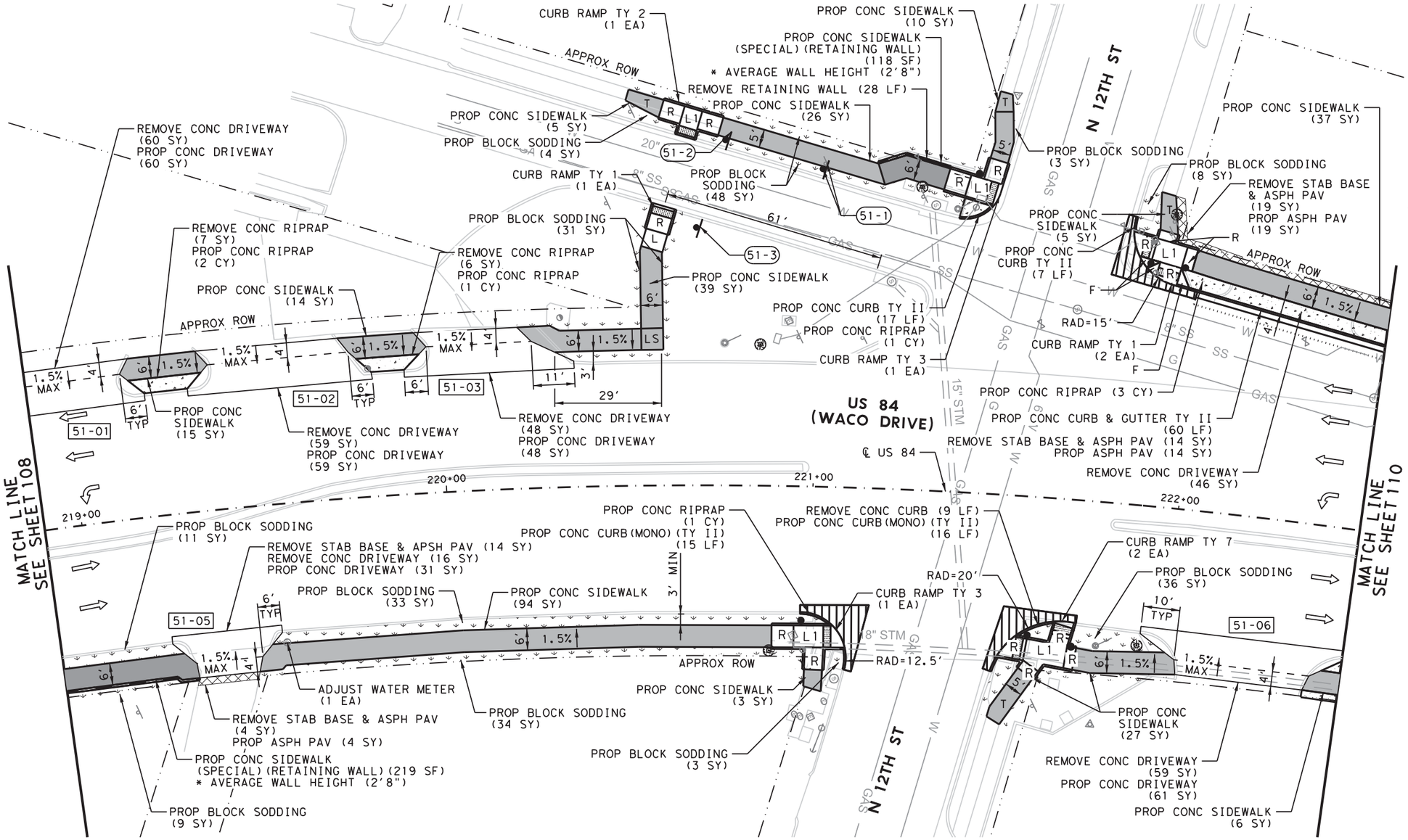

NOTES:

* FOR CONTRACTOR INFORMATION ONLY

1. LINEAR DIMENSIONS ARE TO THE BACK OF CURB.
2. RADII CALLOUTS ARE TO NOMINAL FACE OF CURB UNLESS NOTED OTHERWISE.
3. SIDEWALK CROSS SLOPE IS 1.5% USUAL. MAXIMUM ALLOWABLE CROSS SLOPE ON SIDEWALK IS 2.0%.
4. CONTRACTOR SHALL VERIFY ELEVATIONS AND DIMENSIONS IN THE FIELD PRIOR TO CONSTRUCTION.
5. THE INFORMATION SHOWN IN THESE PLANS CONCERNING TYPE AND LOCATION OF UTILITIES IS NOT GUARANTEED TO BE ACCURATE OR ALL INCLUSIVE. IT SHALL BE THE CONTRACTOR'S RESPONSIBILITY TO VERIFY AND LOCATE ALL EXISTING UTILITIES PRIOR TO CONSTRUCTION. THE CONTRACTOR WILL BE SOLELY RESPONSIBLE FOR ANY DAMAGES BY THEIR CONSTRUCTION OPERATIONS TO EXISTING UTILITIES.
6. REFER TO DRIVEWAY DETAILS, MISCELLANEOUS DETAILS, SIGNAL SHEETS, PAVEMENT MARKING SHEETS, SUMMARY OF SMALL SIGNS, AND TXDOT PED STANDARDS FOR ADDITIONAL INFORMATION.
7. PROPOSED SIGN LOCATIONS MAY BE ADJUSTED AS APPROVED BY THE ENGINEER.

03/01/2021

Kimley»Horn F-928

© 2021

Texas Department of Transportation

SPECIAL NOTES & DETAILS

RETAINING WALL DETAIL

NTS

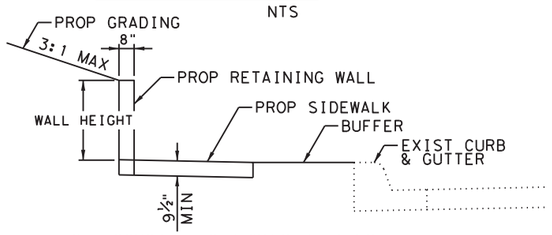

SEE CONCRETE SIDEWALK DETAILS FOR ADDITIONAL WALL AND SIDEWALK INFORMATION.

LEGEND

APPROX ROW	L1	LANDING COMMON	R	RAMP
ELECTRIC BOX/VAULT	LS	LEVEL SIDEWALK (2% MAX)		RIPRAP (CONC)
ES EXIST SIDEWALK	SL	LONGITUDINAL SLOPES MAY NOT EXCEED 5% & CROSS SLOPES MAY NOT EXCEED 2%		SAWCUT LINE
ER EXISTING RAMP				SIDEWALK WALL
FENCE	RAD	RADIUS		SIGN (EXISTING)
FIRE HYDRANT	Ⓢ	MANHOLE	XX-X	SIGN NUMBER
F FLARE		PED SIGNAL POLE (EXIST)		TRAFFIC FLOW
Ⓖ GAS METER	●	PED SIGNAL POLE (PROP)		TRAF SIGNAL POLE (EXIST)
GUY ANCHOR		POWER/ILLUMINATION POLE		TRAF SIGNAL POLE (PROP)
HANDRAIL		PROPOSED ASPHALT PAVING	T	TRANSITION
L LANDING		PROPOSED CONCRETE PAVING		TREE/BUSHES
PROPOSED SMALL SIGN		PROPOSED SIDEWALK	Ⓦ	WATER METER

SIDEWALK LAYOUT

AT N 12TH ST

SHEET 51 OF 74

FED.RD. DIV.NO.	PROJECT ID.	HIGHWAY NO.
6	(SEE TITLE SHEET)	US 84

STATE	DIST.	COUNTY	SHEET NO.
TEXAS	WAC	MCLENNAN	109
CONT.	SECT.	JOB	
0055	15	072	

FILENAME: pw:\\kh-pw.bentley.com:kh-pw-01\Documents\01 Active Projects\TX-FTW-063586010 - US 84 (Waco Drive)\WAC 0055150724 - Design\Plan Set\3. Roadway\US84_RDW_SP50.dgn
PLOTTED: 12/21/2020

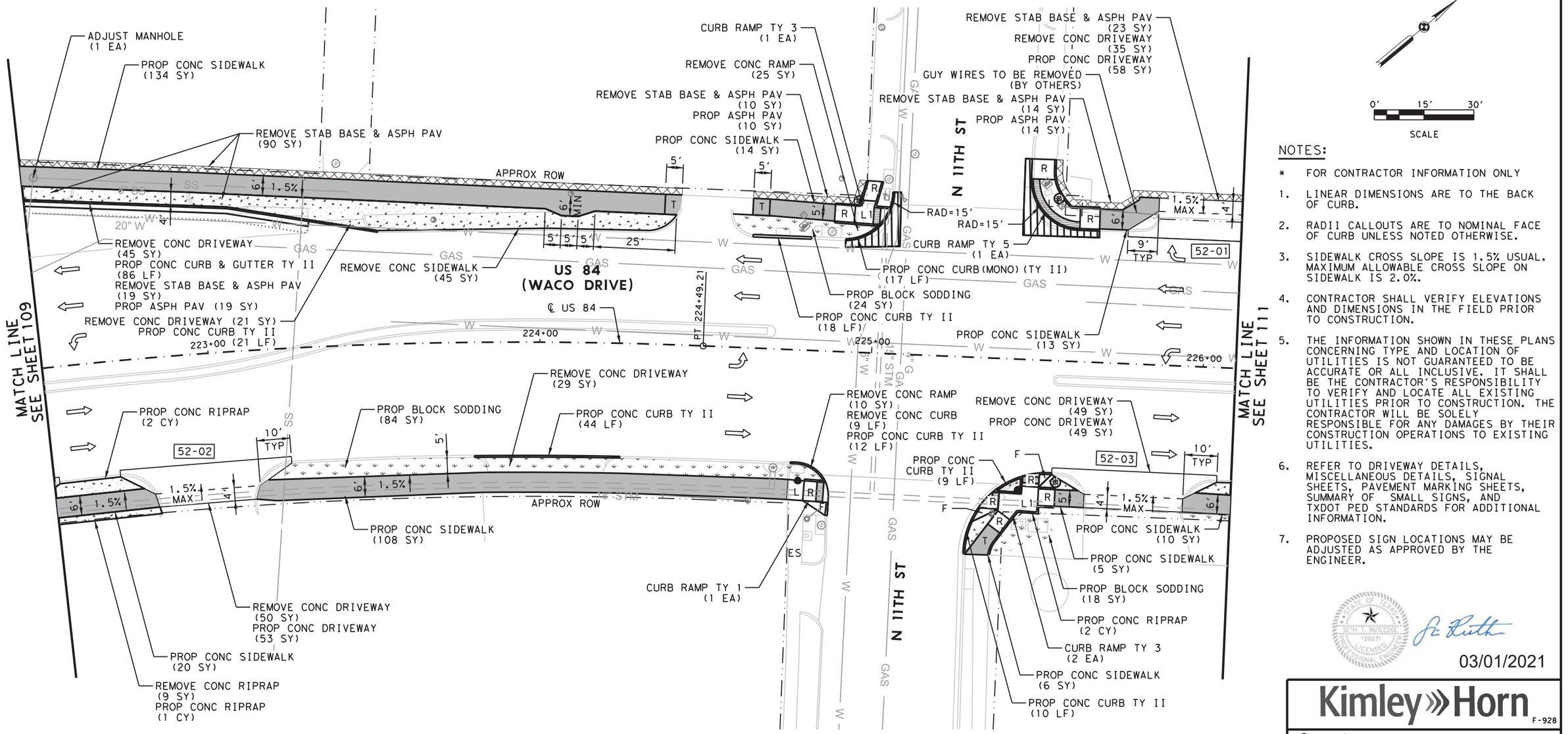

NOTES:

* FOR CONTRACTOR INFORMATION ONLY

1. LINEAR DIMENSIONS ARE TO THE BACK OF CURB.
2. RADII CALLOUTS ARE TO NOMINAL FACE OF CURB UNLESS NOTED OTHERWISE.
3. SIDEWALK CROSS SLOPE IS 1.5% USUAL. MAXIMUM ALLOWABLE CROSS SLOPE ON SIDEWALK IS 2.0%.
4. CONTRACTOR SHALL VERIFY ELEVATIONS AND DIMENSIONS IN THE FIELD PRIOR TO CONSTRUCTION.
5. THE INFORMATION SHOWN IN THESE PLANS CONCERNING TYPE AND LOCATION OF UTILITIES IS NOT GUARANTEED TO BE ACCURATE OR ALL INCLUSIVE. IT SHALL BE THE CONTRACTOR'S RESPONSIBILITY TO VERIFY AND LOCATE ALL EXISTING UTILITIES PRIOR TO CONSTRUCTION. THE CONTRACTOR WILL BE SOLELY RESPONSIBLE FOR ANY DAMAGES BY THEIR CONSTRUCTION OPERATIONS TO EXISTING UTILITIES.
6. REFER TO DRIVEWAY DETAILS, MISCELLANEOUS DETAILS, SIGNAL SHEETS, PAVEMENT MARKING SHEETS, SUMMARY OF SMALL SIGNS, AND TXDOT PED STANDARDS FOR ADDITIONAL INFORMATION.
7. PROPOSED SIGN LOCATIONS MAY BE ADJUSTED AS APPROVED BY THE ENGINEER.

STATE OF TEXAS
JAMES R. RUTH
103920
LICENSED
PROFESSIONAL ENGINEER

03/01/2021

Kimley»Horn F-928

© 2021

Texas Department of Transportation

SPECIAL NOTES & DETAILS

LEGEND

APPROX ROW	L1	LANDING COMMON	R	RAMP
ELECTRIC BOX/VAULT	LS	LEVEL SIDEWALK (2% MAX)		RIPRAP (CONC)
ES EXIST SIDEWALK	SL	LONGITUDINAL SLOPES MAY NOT EXCEED 5% & CROSS SLOPES MAY NOT EXCEED 2%		SAWCUT LINE
ER EXISTING RAMP				SIDEWALK WALL
FENCE	RAD	RADIUS		SIGN (EXISTING)
FIRE HYDRANT	Ⓢ	MANHOLE	XX-X	SIGN NUMBER
F FLARE		PED SIGNAL POLE (EXIST)		TRAFFIC FLOW
Ⓖ GAS METER		PED SIGNAL POLE (PROP)		TRAF SIGNAL POLE (EXIST)
GUY ANCHOR		POWER/ILLUMINATION POLE		TRAF SIGNAL POLE (PROP)
HANDRAIL		PROPOSED ASPHALT PAVING	T	TRANSITION
L LANDING		PROPOSED CONCRETE PAVING		TREE/BUSHES
PROPOSED SMALL SIGN		PROPOSED SIDEWALK	Ⓦ	WATER METER

SIDEWALK LAYOUT

AT N 11TH ST

SHEET 52 OF 74

FED.RD. DIV.NO.	PROJECT ID.	HIGHWAY NO.
6	(SEE TITLE SHEET)	US 84

STATE	DIST.	COUNTY	SHEET NO.
TEXAS	WAC	MCLENNAN	110
CONT.	SECT.	JOB	
0055	15	072	

FILENAME: pw:\\kh-pw.bentley.com:kh-pw-01\Documents\01 Active Projects\TX-FTW-063586010 - US 84 (Waco Drive)\WAC 0055150724 - Design\Plan Set\3. Roadway\US84_RDW_SP51.dgn
PLOTTED: 12/21/2020

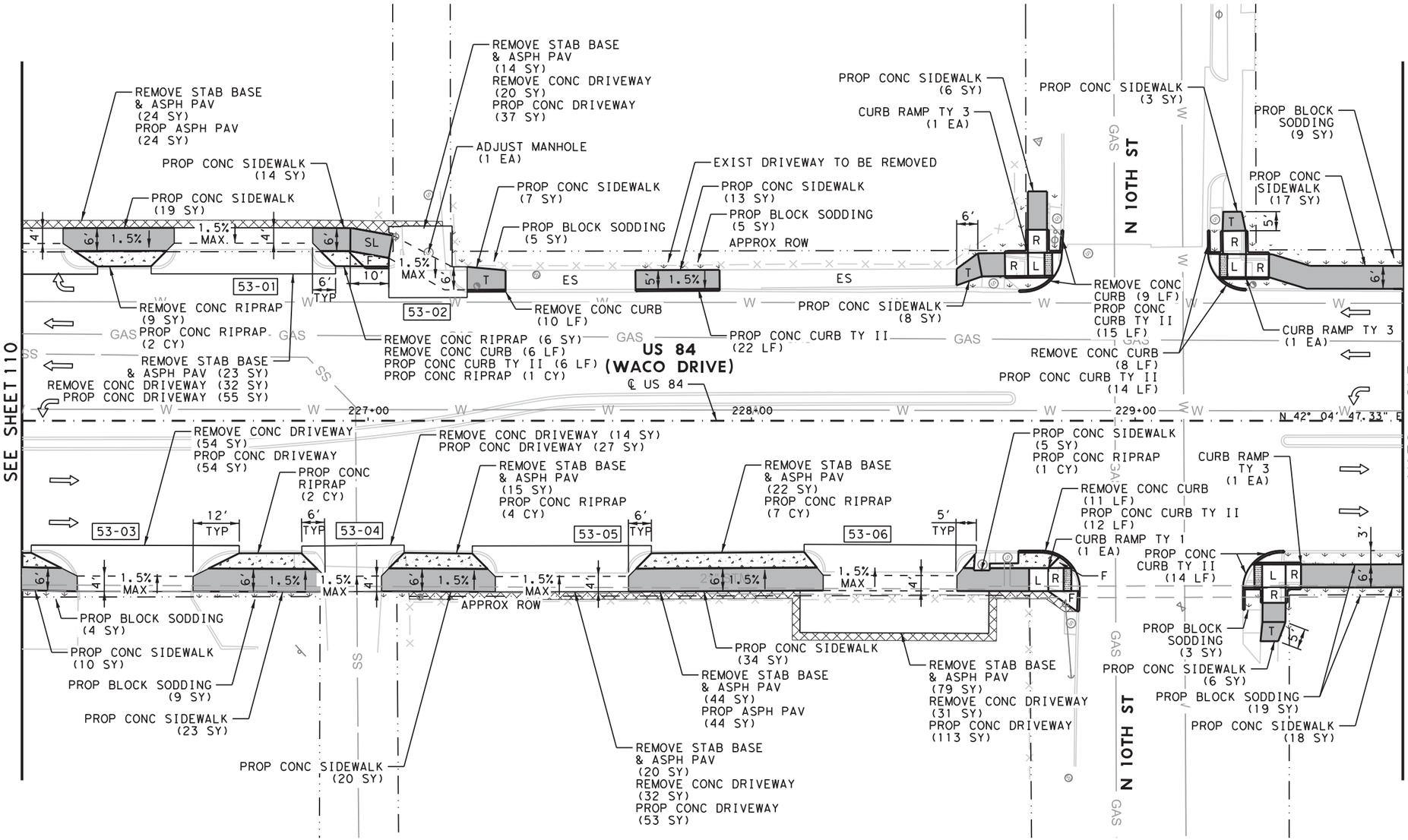

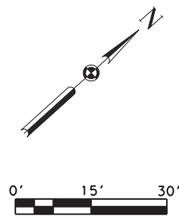

NOTES:

* FOR CONTRACTOR INFORMATION ONLY

1. LINEAR DIMENSIONS ARE TO THE BACK OF CURB.
2. RADII CALLOUTS ARE TO NOMINAL FACE OF CURB UNLESS NOTED OTHERWISE.
3. SIDEWALK CROSS SLOPE IS 1.5% USUAL. MAXIMUM ALLOWABLE CROSS SLOPE ON SIDEWALK IS 2.0%.
4. CONTRACTOR SHALL VERIFY ELEVATIONS AND DIMENSIONS IN THE FIELD PRIOR TO CONSTRUCTION.
5. THE INFORMATION SHOWN IN THESE PLANS CONCERNING TYPE AND LOCATION OF UTILITIES IS NOT GUARANTEED TO BE ACCURATE OR ALL INCLUSIVE. IT SHALL BE THE CONTRACTOR'S RESPONSIBILITY TO VERIFY AND LOCATE ALL EXISTING UTILITIES PRIOR TO CONSTRUCTION. THE CONTRACTOR WILL BE SOLELY RESPONSIBLE FOR ANY DAMAGES BY THEIR CONSTRUCTION OPERATIONS TO EXISTING UTILITIES.
6. REFER TO DRIVEWAY DETAILS, MISCELLANEOUS DETAILS, SIGNAL SHEETS, PAVEMENT MARKING SHEETS, SUMMARY OF SMALL SIGNS, AND TXDOT PED STANDARDS FOR ADDITIONAL INFORMATION.
7. PROPOSED SIGN LOCATIONS MAY BE ADJUSTED AS APPROVED BY THE ENGINEER.

03/01/2021

Kimley»Horn F-928

© 2021

Texas Department of Transportation

SPECIAL NOTES & DETAILS

LEGEND

APPROX ROW	L1	LANDING COMMON	R	RAMP
ELECTRIC BOX/VAULT	LS	LEVEL SIDEWALK (2% MAX)		RIPRAP (CONC)
ES EXIST SIDEWALK	SL	LONGITUDINAL SLOPES MAY NOT EXCEED 5% & CROSS SLOPES MAY NOT EXCEED 2%		SAWCUT LINE
ER EXISTING RAMP				SIDEWALK WALL
FENCE	RAD	RADIUS		SIGN (EXISTING)
FIRE HYDRANT	Ⓢ	MANHOLE	XX-X	SIGN NUMBER
F FLARE		PED SIGNAL POLE (EXIST)		TRAFFIC FLOW
Ⓖ GAS METER	●	PED SIGNAL POLE (PROP)		TRAF SIGNAL POLE (EXIST)
GUY ANCHOR		POWER/ILLUMINATION POLE		TRAF SIGNAL POLE (PROP)
HANDRAIL		PROPOSED ASPHALT PAVING	T	TRANSITION
L LANDING		PROPOSED CONCRETE PAVING		TREE/BUSHES
PROPOSED SMALL SIGN		PROPOSED SIDEWALK	Ⓦ	WATER METER

SIDEWALK LAYOUT

AT N 10TH ST

SHEET 53 OF 74

FED.RD. DIV.NO.	PROJECT ID.	HIGHWAY NO.
6	(SEE TITLE SHEET)	US 84

STATE	DIST.	COUNTY	SHEET NO.
TEXAS	WAC	MCLENNAN	111
CONT.	SECT.	JOB	
0055	15	072	

FILENAME: pw:\\kh-pw.bentley.com:kh-pw-01\Documents\01 Active Projects\TX-FTW-063586010 - US 84 (Waco Drive)\WAC 0055150724 - Design\Plan Set\3. Roadway\US84_RDW_SP52.dgn
PLOTTED: 12/21/2020

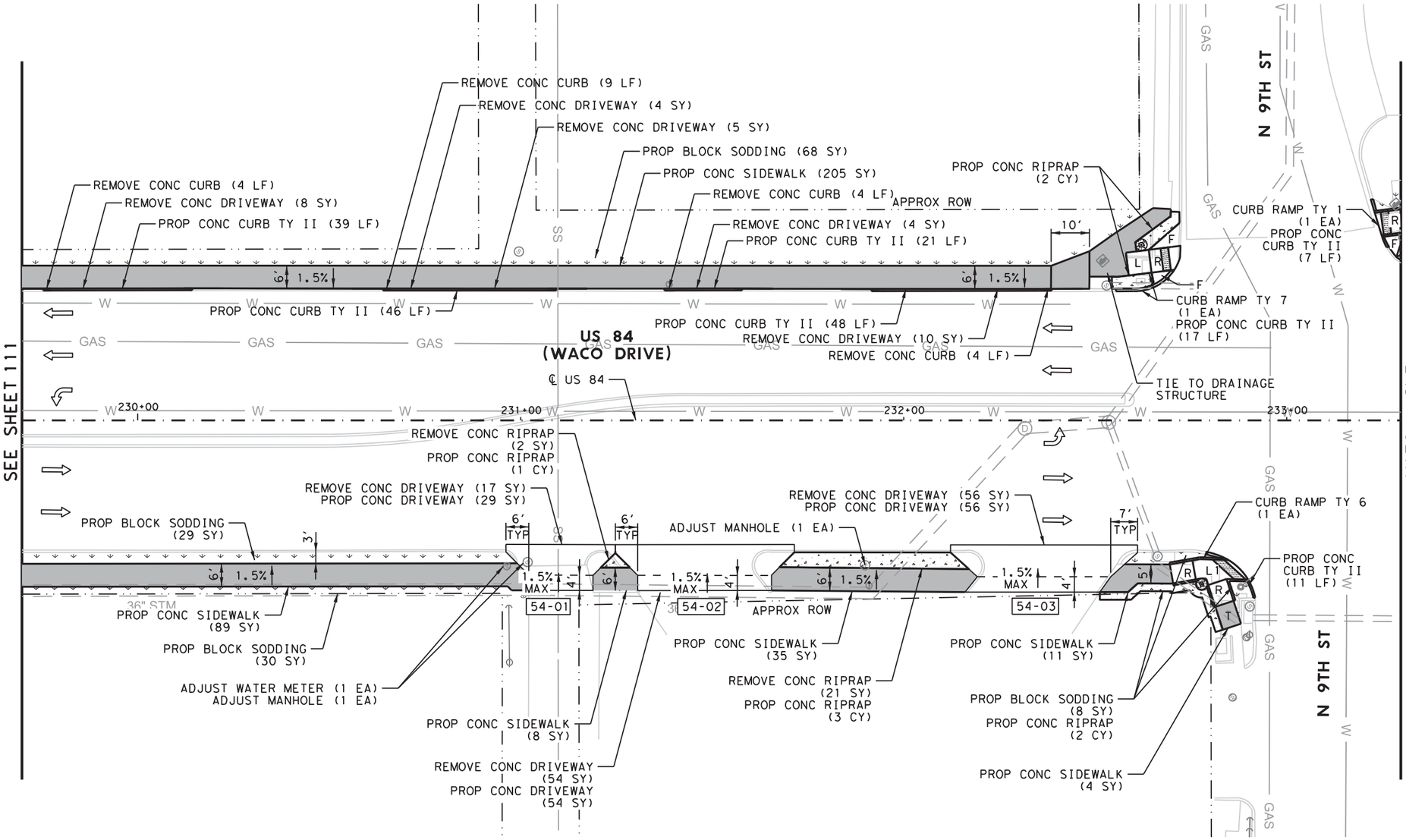

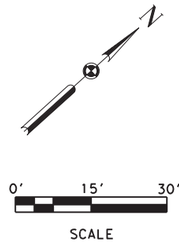

NOTES:

* FOR CONTRACTOR INFORMATION ONLY

1. LINEAR DIMENSIONS ARE TO THE BACK OF CURB.
2. RADII CALLOUTS ARE TO NOMINAL FACE OF CURB UNLESS NOTED OTHERWISE.
3. SIDEWALK CROSS SLOPE IS 1.5% USUAL. MAXIMUM ALLOWABLE CROSS SLOPE ON SIDEWALK IS 2.0%.
4. CONTRACTOR SHALL VERIFY ELEVATIONS AND DIMENSIONS IN THE FIELD PRIOR TO CONSTRUCTION.
5. THE INFORMATION SHOWN IN THESE PLANS CONCERNING TYPE AND LOCATION OF UTILITIES IS NOT GUARANTEED TO BE ACCURATE OR ALL INCLUSIVE. IT SHALL BE THE CONTRACTOR'S RESPONSIBILITY TO VERIFY AND LOCATE ALL EXISTING UTILITIES PRIOR TO CONSTRUCTION. THE CONTRACTOR WILL BE SOLELY RESPONSIBLE FOR ANY DAMAGES BY THEIR CONSTRUCTION OPERATIONS TO EXISTING UTILITIES.
6. REFER TO DRIVEWAY DETAILS, MISCELLANEOUS DETAILS, SIGNAL SHEETS, PAVEMENT MARKING SHEETS, SUMMARY OF SMALL SIGNS, AND TXDOT PED STANDARDS FOR ADDITIONAL INFORMATION.
7. PROPOSED SIGN LOCATIONS MAY BE ADJUSTED AS APPROVED BY THE ENGINEER.

03/01/2021

Kimley»Horn F-928

© 2021

Texas Department of Transportation

SPECIAL NOTES & DETAILS

LEGEND

— · —	APPROX ROW	L1	LANDING COMMON	R	RAMP
	ELECTRIC BOX/VAULT	LS	LEVEL SIDEWALK (2% MAX)		RIPRAP (CONC)
ES	EXIST SIDEWALK	SL	LONGITUDINAL SLOPES MAY NOT EXCEED 5% & CROSS SLOPES MAY NOT EXCEED 2%	- - -	SAWCUT LINE
ER	EXISTING RAMP				SIDEWALK WALL
—×—	FENCE	RAD	RADIUS		SIGN (EXISTING)
	FIRE HYDRANT	Ⓢ	MANHOLE	XX-X	SIGN NUMBER
F	FLARE		PED SIGNAL POLE (EXIST)		TRAFFIC FLOW
Ⓖ	GAS METER	●	PED SIGNAL POLE (PROP)		TRAF SIGNAL POLE (EXIST)
	GUY ANCHOR		POWER/ILLUMINATION POLE		TRAF SIGNAL POLE (PROP)
	HANDRAIL		PROPOSED ASPHALT PAVING	T	TRANSITION
L	LANDING		PROPOSED CONCRETE PAVING		TREE/BUSHES
	PROPOSED SMALL SIGN		PROPOSED SIDEWALK	Ⓦ	WATER METER

SIDEWALK LAYOUT

AT N 9TH ST

SHEET 54 OF 74

FED.RD. DIV.NO.	PROJECT ID.	HIGHWAY NO.
6	(SEE TITLE SHEET)	US 84

STATE	DIST.	COUNTY	SHEET NO.
TEXAS	WAC	MCLENNAN	112
CONT.	SECT.	JOB	
0055	15	072	

FILENAME: pw:\\kh-pw.bentley.com:kh-pw-01\Documents\01 Active Projects\TX-FTW-063586010 - US 84 (Waco Drive)\WAC 0055150724 - Design\Plan Set\3. Roadway\US84_RDW_SP53.dgn
PLOTTED: 12/21/2020

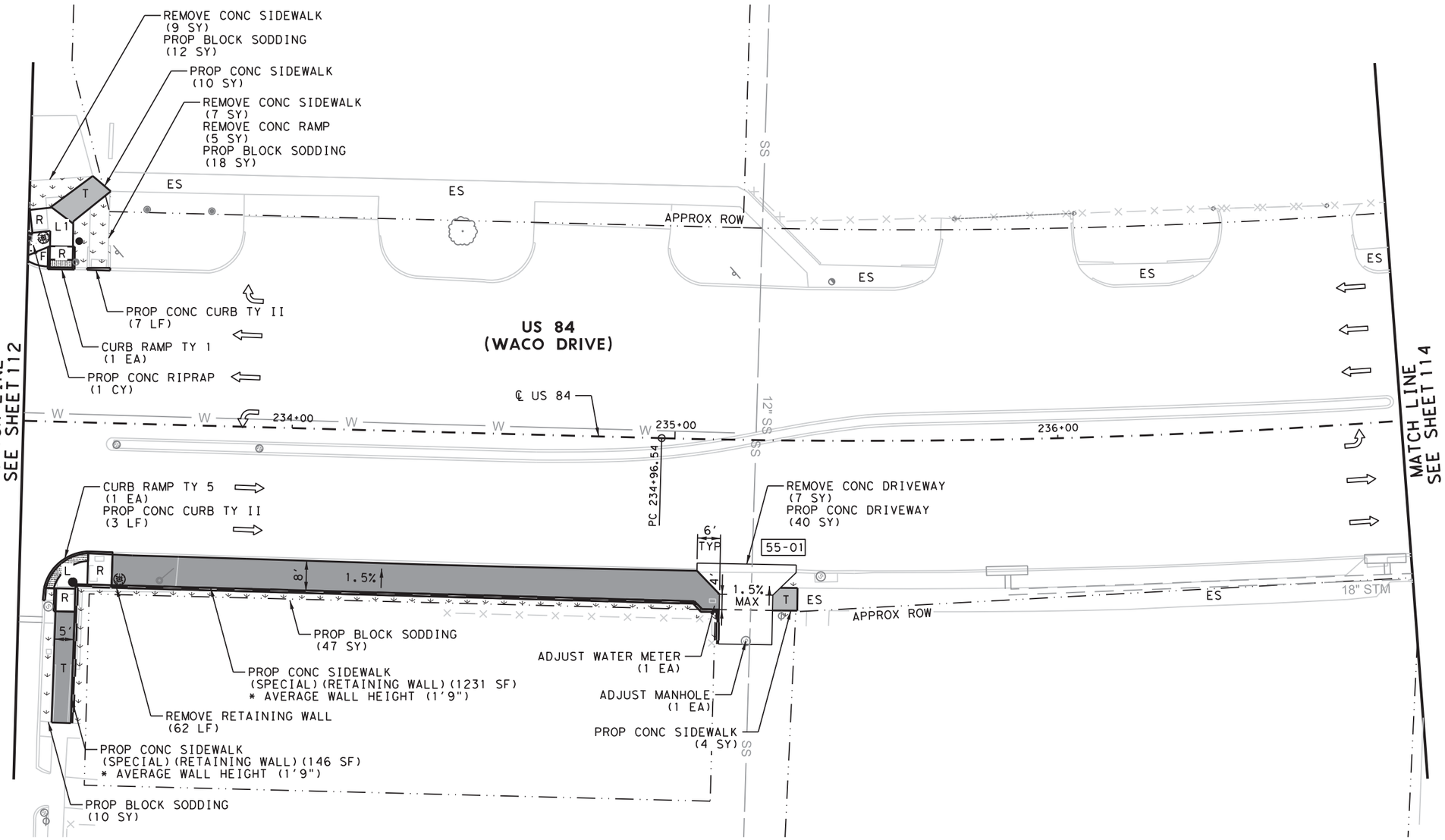

0' 15' 30'

SCALE

NOTES:

* FOR CONTRACTOR INFORMATION ONLY

1. LINEAR DIMENSIONS ARE TO THE BACK OF CURB.
2. RADII CALLOUTS ARE TO NOMINAL FACE OF CURB UNLESS NOTED OTHERWISE.
3. SIDEWALK CROSS SLOPE IS 1.5% USUAL. MAXIMUM ALLOWABLE CROSS SLOPE ON SIDEWALK IS 2.0%.
4. CONTRACTOR SHALL VERIFY ELEVATIONS AND DIMENSIONS IN THE FIELD PRIOR TO CONSTRUCTION.
5. THE INFORMATION SHOWN IN THESE PLANS CONCERNING TYPE AND LOCATION OF UTILITIES IS NOT GUARANTEED TO BE ACCURATE OR ALL INCLUSIVE. IT SHALL BE THE CONTRACTOR'S RESPONSIBILITY TO VERIFY AND LOCATE ALL EXISTING UTILITIES PRIOR TO CONSTRUCTION. THE CONTRACTOR WILL BE SOLELY RESPONSIBLE FOR ANY DAMAGES BY THEIR CONSTRUCTION OPERATIONS TO EXISTING UTILITIES.
6. REFER TO DRIVEWAY DETAILS, MISCELLANEOUS DETAILS, SIGNAL SHEETS, PAVEMENT MARKING SHEETS, SUMMARY OF SMALL SIGNS, AND TXDOT PED STANDARDS FOR ADDITIONAL INFORMATION.
7. PROPOSED SIGN LOCATIONS MAY BE ADJUSTED AS APPROVED BY THE ENGINEER.

03/01/2021

Kimley»Horn F-928

© 2021

Texas Department of Transportation

SPECIAL NOTES & DETAILS

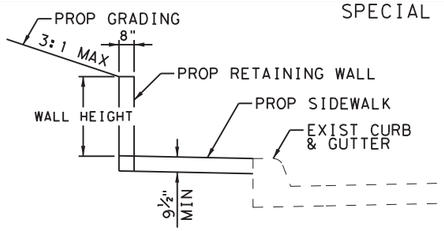

RETAINING WALL DETAIL

NTS

SEE CONCRETE SIDEWALK DETAILS FOR ADDITIONAL WALL AND SIDEWALK INFORMATION.

LEGEND

APPROX ROW	L1	LANDING COMMON	R	RAMP
ELECTRIC BOX/VAULT	LS	LEVEL SIDEWALK (2% MAX)	RIPRAP (CONC)	
ES	EXIST SIDEWALK	SL	LONGITUDINAL SLOPES MAY NOT EXCEED 5% & CROSS SLOPES MAY NOT EXCEED 2%	SAWCUT LINE	
ER	EXISTING RAMP			SIDEWALK WALL	
FENCE	RAD	RADIUS	SIGN (EXISTING)	
FIRE HYDRANT	MANHOLE	SIGN NUMBER	
F	FLARE	PED SIGNAL POLE (EXIST)	TRAFFIC FLOW	
GAS METER	PED SIGNAL POLE (PROP)	TRAF SIGNAL POLE (EXIST)	
GUY ANCHOR	POWER/ILLUMINATION POLE	TRAF SIGNAL POLE (PROP)	
HANDRAIL	PROPOSED ASPHALT PAVING	T	TRANSITION
L	LANDING	PROPOSED CONCRETE PAVING	TREE/BUSHES	
PROPOSED SMALL SIGN	PROPOSED SIDEWALK	WATER METER	

SIDEWALK LAYOUT

BETWEEN N 9TH ST
AND N 8TH ST

SHEET 55 OF 74

FED. RD. DIV. NO.	PROJECT ID.	HIGHWAY NO.
6	(SEE TITLE SHEET)	US 84

STATE	DIST.	COUNTY	SHEET NO.
TEXAS	WAC	MCLENNAN	113
CONT.	SECT.	JOB	
0055	15	072	

FILENAME: pw:\\kh-pw.bentley.com:kh-pw-01\Documents\01 Active Projects\TX-FTW-063586010 - US 84 (Waco Drive)\WAC 0055150724 - Design\Plan Set\3. Roadway\US84_RDW_SP54.dgn
PLOTTED: 12/21/2020

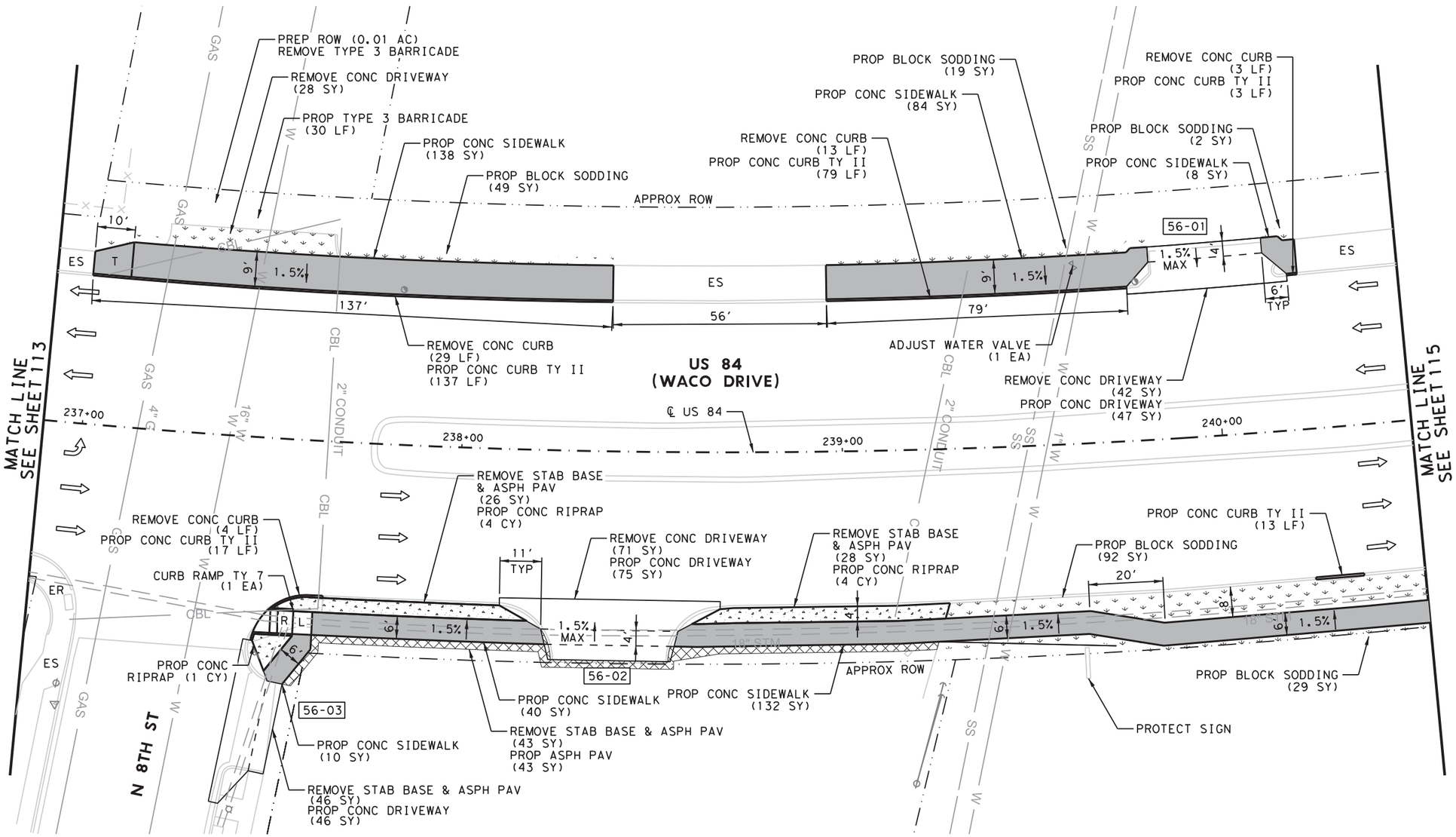

NOTES:

* FOR CONTRACTOR INFORMATION ONLY

1. LINEAR DIMENSIONS ARE TO THE BACK OF CURB.
2. RADII CALLOUTS ARE TO NOMINAL FACE OF CURB UNLESS NOTED OTHERWISE.
3. SIDEWALK CROSS SLOPE IS 1.5% USUAL. MAXIMUM ALLOWABLE CROSS SLOPE ON SIDEWALK IS 2.0%.
4. CONTRACTOR SHALL VERIFY ELEVATIONS AND DIMENSIONS IN THE FIELD PRIOR TO CONSTRUCTION.
5. THE INFORMATION SHOWN IN THESE PLANS CONCERNING TYPE AND LOCATION OF UTILITIES IS NOT GUARANTEED TO BE ACCURATE OR ALL INCLUSIVE. IT SHALL BE THE CONTRACTOR'S RESPONSIBILITY TO VERIFY AND LOCATE ALL EXISTING UTILITIES PRIOR TO CONSTRUCTION. THE CONTRACTOR WILL BE SOLELY RESPONSIBLE FOR ANY DAMAGES BY THEIR CONSTRUCTION OPERATIONS TO EXISTING UTILITIES.
6. REFER TO DRIVEWAY DETAILS, MISCELLANEOUS DETAILS, SIGNAL SHEETS, PAVEMENT MARKING SHEETS, SUMMARY OF SMALL SIGNS, AND TXDOT PED STANDARDS FOR ADDITIONAL INFORMATION.
7. PROPOSED SIGN LOCATIONS MAY BE ADJUSTED AS APPROVED BY THE ENGINEER.

03/01/2021

Kimley»Horn F-928

© 2021

Texas Department of Transportation

SPECIAL NOTES & DETAILS

LEGEND

APPROX ROW	L1	LANDING COMMON	R	RAMP
ELECTRIC BOX/VAULT	LS	LEVEL SIDEWALK (2% MAX)		RIPRAP (CONC)
ES EXIST SIDEWALK	SL	LONGITUDINAL SLOPES MAY NOT EXCEED 5% & CROSS SLOPES MAY NOT EXCEED 2%		SAWCUT LINE
ER EXISTING RAMP				SIDEWALK WALL
FENCE	RAD	RADIUS		SIGN (EXISTING)
FIRE HYDRANT	Ⓢ	MANHOLE	XX-X	SIGN NUMBER
F FLARE		PED SIGNAL POLE (EXIST)		TRAFFIC FLOW
Ⓖ GAS METER	●	PED SIGNAL POLE (PROP)		TRAF SIGNAL POLE (EXIST)
GUY ANCHOR		POWER/ILLUMINATION POLE		TRAF SIGNAL POLE (PROP)
HANDRAIL		PROPOSED ASPHALT PAVING	T	TRANSITION
L LANDING		PROPOSED CONCRETE PAVING		TREE/BUSHES
PROPOSED SMALL SIGN		PROPOSED SIDEWALK	Ⓦ	WATER METER

SIDEWALK LAYOUT

AT N 8TH ST

SHEET 56 OF 74

FED. RD. DIV. NO.	PROJECT ID.	HIGHWAY NO.
6	(SEE TITLE SHEET)	US 84

STATE	DIST.	COUNTY	SHEET NO.
TEXAS	WAC	MCLENNAN	114
CONT.	SECT.	JOB	
0055	15	072	

FILENAME: pw:\\kh-pw.bentley.com:kh-pw-01\Documents\01 Active Projects\TX-FTW-063586010 - US 84 (Waco Drive)\WAC 0055150724 - Design\Plan Set\3. Roadway\US84_RDW_SP55.dgn
PLOTTED: 12/21/2020

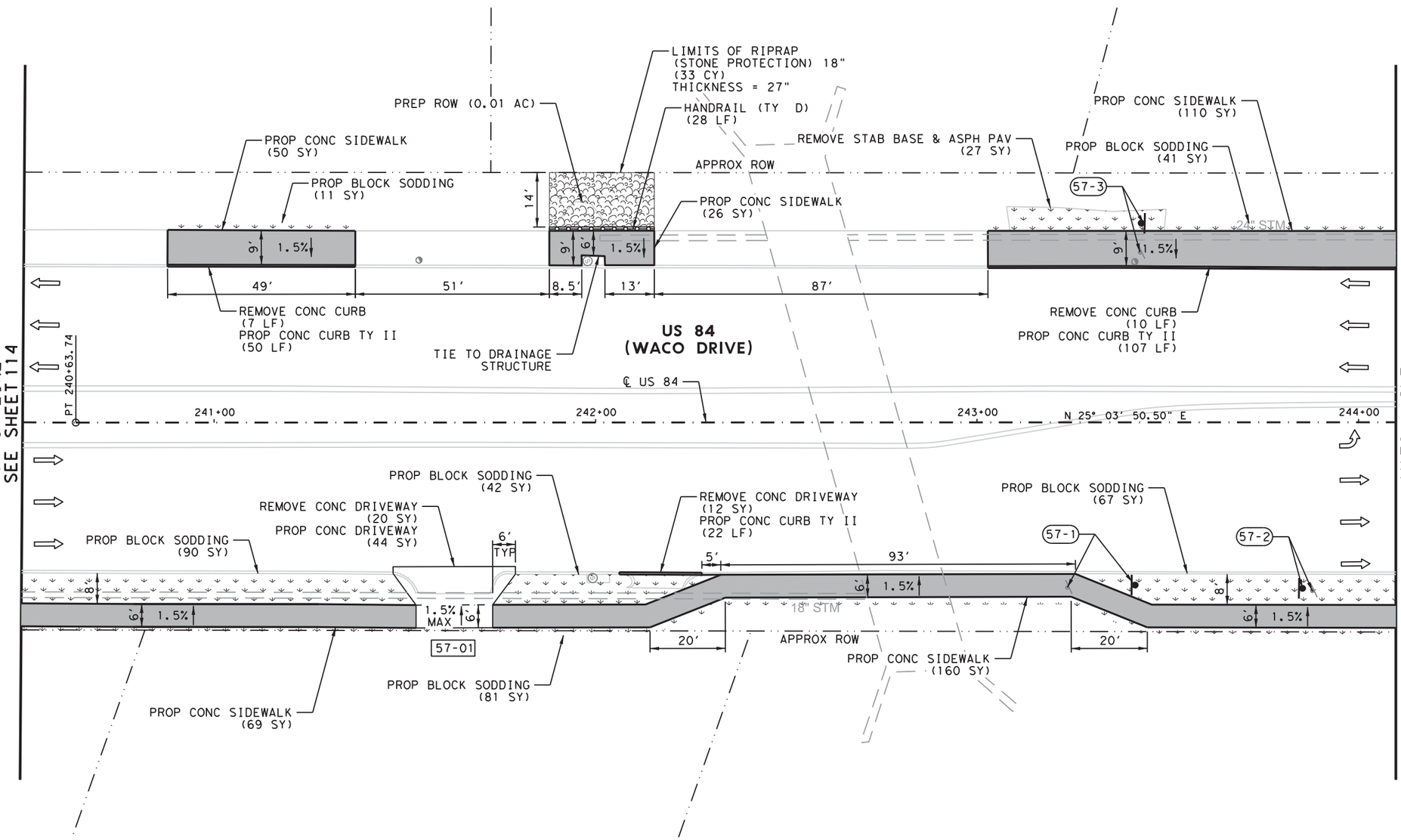

0' 15' 30'

SCALE

NOTES:

* FOR CONTRACTOR INFORMATION ONLY

1. LINEAR DIMENSIONS ARE TO THE BACK OF CURB.
2. RADII CALLOUTS ARE TO NOMINAL FACE OF CURB UNLESS NOTED OTHERWISE.
3. SIDEWALK CROSS SLOPE IS 1.5% USUAL. MAXIMUM ALLOWABLE CROSS SLOPE ON SIDEWALK IS 2.0%.
4. CONTRACTOR SHALL VERIFY ELEVATIONS AND DIMENSIONS IN THE FIELD PRIOR TO CONSTRUCTION.
5. THE INFORMATION SHOWN IN THESE PLANS CONCERNING TYPE AND LOCATION OF UTILITIES IS NOT GUARANTEED TO BE ACCURATE OR ALL INCLUSIVE. IT SHALL BE THE CONTRACTOR'S RESPONSIBILITY TO VERIFY AND LOCATE ALL EXISTING UTILITIES PRIOR TO CONSTRUCTION. THE CONTRACTOR WILL BE SOLELY RESPONSIBLE FOR ANY DAMAGES BY THEIR CONSTRUCTION OPERATIONS TO EXISTING UTILITIES.
6. REFER TO DRIVEWAY DETAILS, MISCELLANEOUS DETAILS, SIGNAL SHEETS, PAVEMENT MARKING SHEETS, SUMMARY OF SMALL SIGNS, AND TXDOT PED STANDARDS FOR ADDITIONAL INFORMATION.
7. PROPOSED SIGN LOCATIONS MAY BE ADJUSTED AS APPROVED BY THE ENGINEER.

STATE OF TEXAS — JAMES RUTH — 103521 — LICENSED — PROFESSIONAL ENGINEER

03/01/2021

Kimley»Horn F-928

© 2021

Texas Department of Transportation

SPECIAL NOTES & DETAILS

LEGEND

APPROX ROW	L1	LANDING COMMON	R	RAMP
ELECTRIC BOX/VAULT	LS	LEVEL SIDEWALK (2% MAX)		RIPRAP (CONC)
ES EXIST SIDEWALK	SL	LONGITUDINAL SLOPES MAY NOT EXCEED 5% & CROSS SLOPES MAY NOT EXCEED 2%		SAWCUT LINE
ER EXISTING RAMP				SIDEWALK WALL
FENCE	RAD	RADIUS		SIGN (EXISTING)
FIRE HYDRANT	Ⓢ	MANHOLE	XX-X	SIGN NUMBER
F FLARE		PED SIGNAL POLE (EXIST)		TRAFFIC FLOW
Ⓖ GAS METER	●	PED SIGNAL POLE (PROP)		TRAF SIGNAL POLE (EXIST)
GUY ANCHOR		POWER/ILLUMINATION POLE		TRAF SIGNAL POLE (PROP)
HANDRAIL		PROPOSED ASPHALT PAVING	T	TRANSITION
L LANDING		PROPOSED CONCRETE PAVING		TREE/BUSHES
PROPOSED SMALL SIGN		PROPOSED SIDEWALK	Ⓦ	WATER METER

SIDEWALK LAYOUT

BETWEEN N 8TH ST AND N 6TH ST

SHEET 57 OF 74

FED.RD. DIV.NO.	PROJECT ID.	HIGHWAY NO.
6	(SEE TITLE SHEET)	US 84

STATE	DIST.	COUNTY	SHEET NO.
TEXAS	WAC	MCLENNAN	115
CONT.	SECT.	JOB	
0055	15	072	

FILENAME: pw:\\kh-pw.bentley.com:kh-pw-01\Documents\01 Active Projects\TX-FTW-063586010 - US 84 (Waco Drive)\WAC 0055150724 - Design\Plan Set\3. Roadway\US84_RDW_SP56.dgn
PLOTTED: 12/21/2020

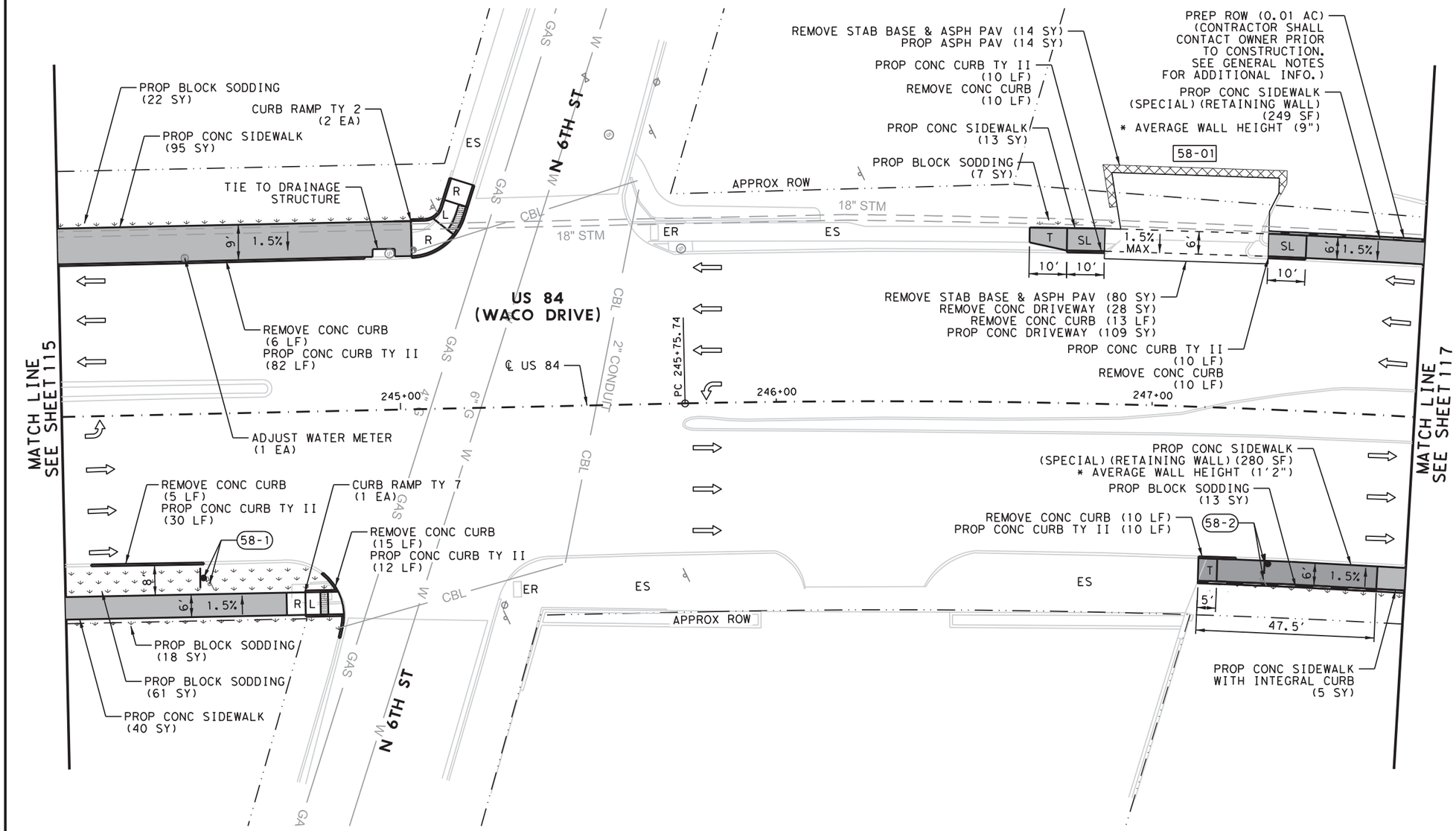

0' 15' 30'

SCALE

NOTES:

* FOR CONTRACTOR INFORMATION ONLY

1. LINEAR DIMENSIONS ARE TO THE BACK OF CURB.
2. RADII CALLOUTS ARE TO NOMINAL FACE OF CURB UNLESS NOTED OTHERWISE.
3. SIDEWALK CROSS SLOPE IS 1.5% USUAL. MAXIMUM ALLOWABLE CROSS SLOPE ON SIDEWALK IS 2.0%.
4. CONTRACTOR SHALL VERIFY ELEVATIONS AND DIMENSIONS IN THE FIELD PRIOR TO CONSTRUCTION.
5. THE INFORMATION SHOWN IN THESE PLANS CONCERNING TYPE AND LOCATION OF UTILITIES IS NOT GUARANTEED TO BE ACCURATE OR ALL INCLUSIVE. IT SHALL BE THE CONTRACTOR'S RESPONSIBILITY TO VERIFY AND LOCATE ALL EXISTING UTILITIES PRIOR TO CONSTRUCTION. THE CONTRACTOR WILL BE SOLELY RESPONSIBLE FOR ANY DAMAGES BY THEIR CONSTRUCTION OPERATIONS TO EXISTING UTILITIES.
6. REFER TO DRIVEWAY DETAILS, MISCELLANEOUS DETAILS, SIGNAL SHEETS, PAVEMENT MARKING SHEETS, SUMMARY OF SMALL SIGNS, AND TXDOT PED STANDARDS FOR ADDITIONAL INFORMATION.
7. PROPOSED SIGN LOCATIONS MAY BE ADJUSTED AS APPROVED BY THE ENGINEER.

SETH T. RUTHERFORD 129231 LICENSED PROFESSIONAL ENGINEER

03/01/2021

Kimley»Horn F-928

© 2021

Texas Department of Transportation

SPECIAL NOTES & DETAILS

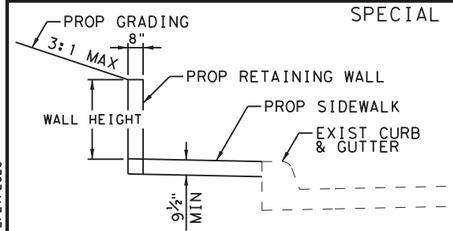

RETAINING WALL DETAIL

NTS

SEE CONCRETE SIDEWALK DETAILS FOR ADDITIONAL WALL AND SIDEWALK INFORMATION.

LEGEND

APPROX ROW		L1	LANDING COMMON	R	RAMP
ELECTRIC BOX/VAULT		LS	LEVEL SIDEWALK (2% MAX)		RIPRAP (CONC)
ES	EXIST SIDEWALK	SL	LONGITUDINAL SLOPES MAY NOT EXCEED 5% & CROSS SLOPES MAY NOT EXCEED 2%		SAWCUT LINE
ER	EXISTING RAMP				SIDEWALK WALL
FENCE		RAD	RADIUS		SIGN (EXISTING)
FIRE HYDRANT		Ⓢ	MANHOLE	XX-X	SIGN NUMBER
F	FLARE		PED SIGNAL POLE (EXIST)		TRAFFIC FLOW
Ⓖ	GAS METER		PED SIGNAL POLE (PROP)		TRAF SIGNAL POLE (EXIST)
GUY ANCHOR			POWER/ILLUMINATION POLE		TRAF SIGNAL POLE (PROP)
HANDRAIL			PROPOSED ASPHALT PAVING	T	TRANSITION
L	LANDING		PROPOSED CONCRETE PAVING		TREE/BUSHES
	PROPOSED SMALL SIGN		PROPOSED SIDEWALK	Ⓦ	WATER METER

SIDEWALK LAYOUT

AT N 6TH ST

SHEET 58 OF 74

FED.RD. DIV.NO.	PROJECT ID.	HIGHWAY NO.
6	(SEE TITLE SHEET)	US 84

STATE	DIST.	COUNTY	SHEET NO.
TEXAS	WAC	MCLENNAN	116
CONT.	SECT.	JOB	
0055	15	072	

FILENAME: pw:\\kh-pw.bentley.com:kh-pw-01\Documents\01 Active Projects\TX-FTW-063586010 - US 84 (Waco Drive)\WAC 0055150724 - Design\Plan Set\3. Roadway\US84_RDW_SP57.dgn
PLOTTED: 12/21/2020

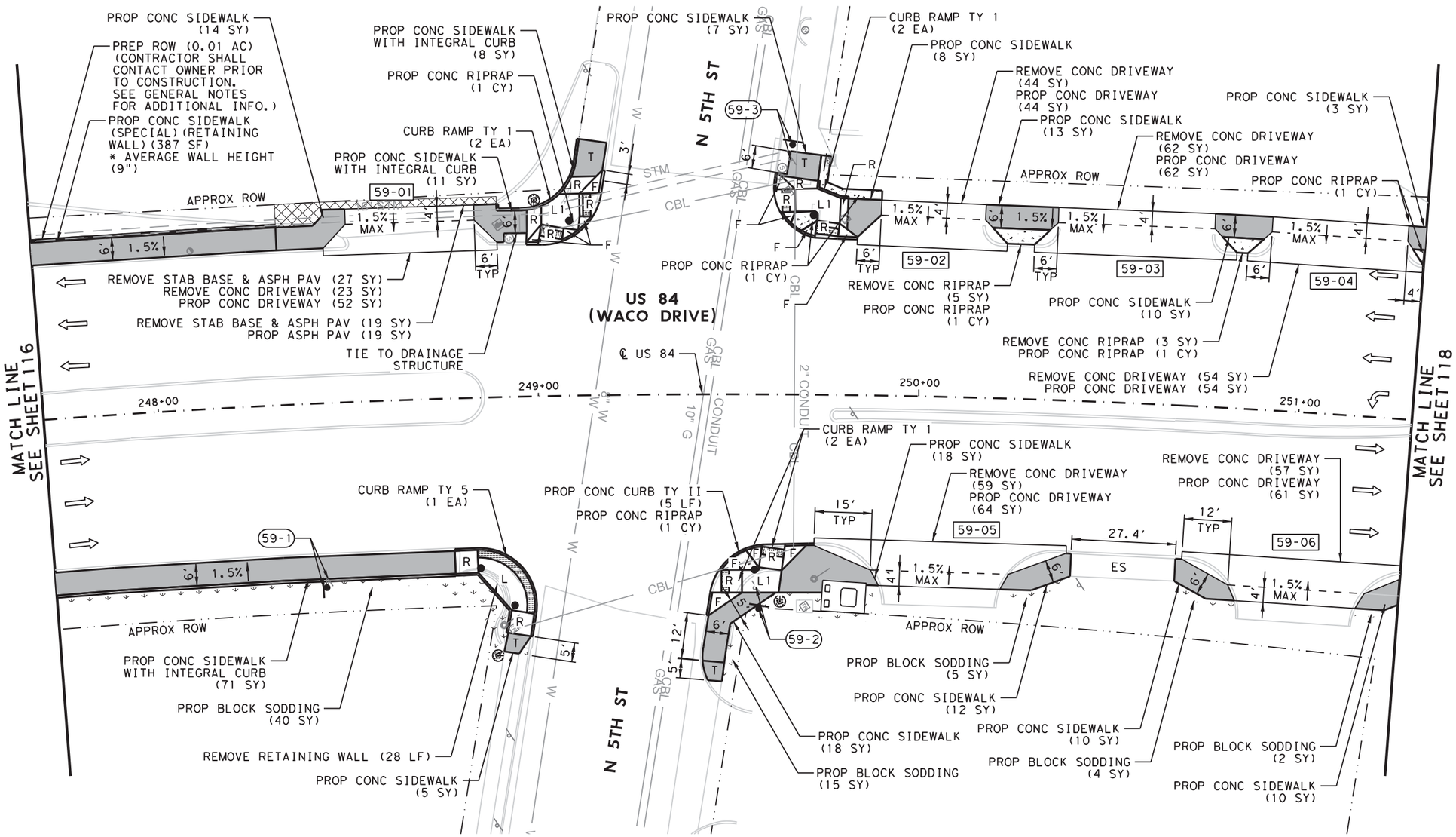

0' 15' 30'

SCALE

NOTES:

* FOR CONTRACTOR INFORMATION ONLY

1. LINEAR DIMENSIONS ARE TO THE BACK OF CURB.
2. RADII CALLOUTS ARE TO NOMINAL FACE OF CURB UNLESS NOTED OTHERWISE.
3. SIDEWALK CROSS SLOPE IS 1.5% USUAL. MAXIMUM ALLOWABLE CROSS SLOPE ON SIDEWALK IS 2.0%.
4. CONTRACTOR SHALL VERIFY ELEVATIONS AND DIMENSIONS IN THE FIELD PRIOR TO CONSTRUCTION.
5. THE INFORMATION SHOWN IN THESE PLANS CONCERNING TYPE AND LOCATION OF UTILITIES IS NOT GUARANTEED TO BE ACCURATE OR ALL INCLUSIVE. IT SHALL BE THE CONTRACTOR'S RESPONSIBILITY TO VERIFY AND LOCATE ALL EXISTING UTILITIES PRIOR TO CONSTRUCTION. THE CONTRACTOR WILL BE SOLELY RESPONSIBLE FOR ANY DAMAGES BY THEIR CONSTRUCTION OPERATIONS TO EXISTING UTILITIES.
6. REFER TO DRIVEWAY DETAILS, MISCELLANEOUS DETAILS, SIGNAL SHEETS, PAVEMENT MARKING SHEETS, SUMMARY OF SMALL SIGNS, AND TXDOT PED STANDARDS FOR ADDITIONAL INFORMATION.
7. PROPOSED SIGN LOCATIONS MAY BE ADJUSTED AS APPROVED BY THE ENGINEER.

STATE OF TEXAS — JAMES RUTH — 96824 — LICENSED PROFESSIONAL ENGINEER

03/01/2021

Kimley»Horn F-928

© 2021

Texas Department of Transportation

SPECIAL NOTES & DETAILS

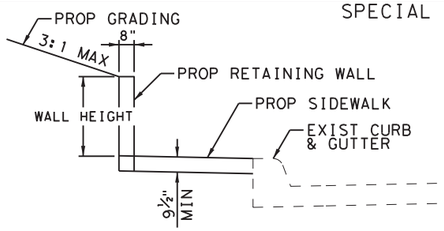

RETAINING WALL DETAIL

NTS

SEE CONCRETE SIDEWALK DETAILS FOR ADDITIONAL WALL AND SIDEWALK INFORMATION.

LEGEND

APPROX ROW	L1	LANDING COMMON	R	RAMP
ELECTRIC BOX/VAULT	LS	LEVEL SIDEWALK (2% MAX)	RIPRAP (CONC)
ES	EXIST SIDEWALK	SL	LONGITUDINAL SLOPES MAY NOT EXCEED 5% & CROSS SLOPES MAY NOT EXCEED 2%	SAWCUT LINE
ER	EXISTING RAMP			SIDEWALK WALL
FENCE	RAD	RADIUS	SIGN (EXISTING)
FIRE HYDRANT	Ⓢ	MANHOLE	XX-X	SIGN NUMBER
F	FLARE		PED SIGNAL POLE (EXIST)		TRAFFIC FLOW
Ⓖ	GAS METER	●	PED SIGNAL POLE (PROP)		TRAF SIGNAL POLE (EXIST)
GUY ANCHOR		POWER/ILLUMINATION POLE		TRAF SIGNAL POLE (PROP)
HANDRAIL		PROPOSED ASPHALT PAVING	T	TRANSITION
L	LANDING		PROPOSED CONCRETE PAVING		TREE/BUSHES
PROPOSED SMALL SIGN		PROPOSED SIDEWALK	Ⓦ	WATER METER

SIDEWALK LAYOUT

AT N 5TH ST

SHEET 59 OF 74

FED. RD. DIV. NO.	PROJECT ID.	HIGHWAY NO.
6	(SEE TITLE SHEET)	US 84

STATE	DIST.	COUNTY	SHEET NO.
TEXAS	WAC	MCLENNAN	117
CONT.	SECT.	JOB	
0055	15	072	

FILENAME: pw:\\kh-pw.bentley.com:kh-pw-01\Documents\01 Active Projects\TX-FTW-063586010 - US 84 (Waco Drive)\WAC 0055150724 - Design\Plan Set\3. Roadway\US84_RDW_SP58.dgn
PLOTTED: 12/21/2020

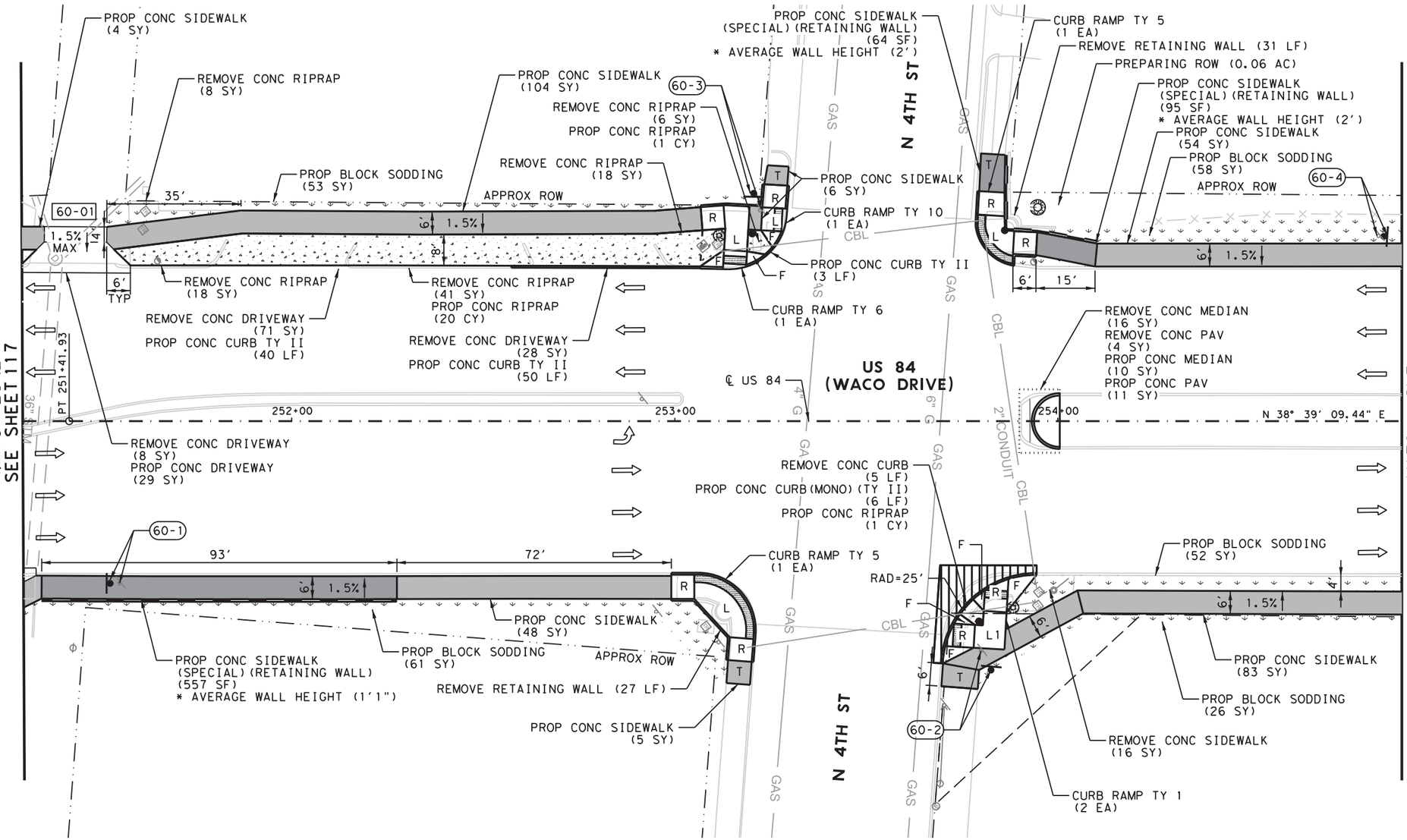

0' 15' 30'

SCALE

NOTES:

* FOR CONTRACTOR INFORMATION ONLY

1. LINEAR DIMENSIONS ARE TO THE BACK OF CURB.
2. RADII CALLOUTS ARE TO NOMINAL FACE OF CURB UNLESS NOTED OTHERWISE.
3. SIDEWALK CROSS SLOPE IS 1.5% USUAL. MAXIMUM ALLOWABLE CROSS SLOPE ON SIDEWALK IS 2.0%.
4. CONTRACTOR SHALL VERIFY ELEVATIONS AND DIMENSIONS IN THE FIELD PRIOR TO CONSTRUCTION.
5. THE INFORMATION SHOWN IN THESE PLANS CONCERNING TYPE AND LOCATION OF UTILITIES IS NOT GUARANTEED TO BE ACCURATE OR ALL INCLUSIVE. IT SHALL BE THE CONTRACTOR'S RESPONSIBILITY TO VERIFY AND LOCATE ALL EXISTING UTILITIES PRIOR TO CONSTRUCTION. THE CONTRACTOR WILL BE SOLELY RESPONSIBLE FOR ANY DAMAGES BY THEIR CONSTRUCTION OPERATIONS TO EXISTING UTILITIES.
6. REFER TO DRIVEWAY DETAILS, MISCELLANEOUS DETAILS, SIGNAL SHEETS, PAVEMENT MARKING SHEETS, SUMMARY OF SMALL SIGNS, AND TXDOT PED STANDARDS FOR ADDITIONAL INFORMATION.
7. PROPOSED SIGN LOCATIONS MAY BE ADJUSTED AS APPROVED BY THE ENGINEER.

SCOTT T. RUBERG 129231 LICENSED PROFESSIONAL ENGINEER

03/01/2021

Kimley»Horn F-928

© 2021

Texas Department of Transportation

SPECIAL NOTES & DETAILS

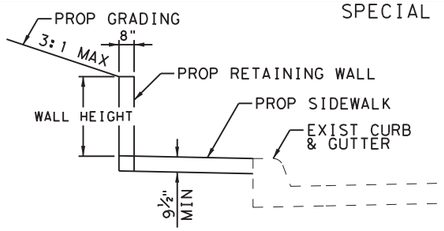

RETAINING WALL DETAIL

NTS

SEE CONCRETE SIDEWALK DETAILS FOR ADDITIONAL WALL AND SIDEWALK INFORMATION.

LEGEND

APPROX ROW	L1	LANDING COMMON	R	RAMP
ELECTRIC BOX/VAULT	LS	LEVEL SIDEWALK (2% MAX)		RIPRAP (CONC)
ES	EXIST SIDEWALK	SL	LONGITUDINAL SLOPES MAY NOT EXCEED 5% & CROSS SLOPES MAY NOT EXCEED 2%		SAWCUT LINE
ER	EXISTING RAMP				SIDEWALK WALL
FENCE	RAD	RADIUS		SIGN (EXISTING)
FIRE HYDRANT	Ⓢ	MANHOLE	XX-X	SIGN NUMBER
F	FLARE		PED SIGNAL POLE (EXIST)		TRAFFIC FLOW
Ⓖ	GAS METER		PED SIGNAL POLE (PROP)		TRAF SIGNAL POLE (EXIST)
GUY ANCHOR		POWER/ILLUMINATION POLE		TRAF SIGNAL POLE (PROP)
HANDRAIL		PROPOSED ASPHALT PAVING	T	TRANSITION
L	LANDING		PROPOSED CONCRETE PAVING		TREE/BUSHES
PROPOSED SMALL SIGN		PROPOSED SIDEWALK	Ⓦ	WATER METER

SIDEWALK LAYOUT

AT N 4TH ST

SHEET 60 OF 74

FED.RD. DIV.NO.	PROJECT ID.	HIGHWAY NO.
6	(SEE TITLE SHEET)	US 84

STATE	DIST.	COUNTY	SHEET NO.
TEXAS	WAC	MCLENNAN	118
CONT.	SECT.	JOB	
0055	15	072	

FILENAME: pw:\\kh-pw.bentley.com:kh-pw-01\Documents\01 Active Projects\TX-FTW-063586010 - US 84 (Waco Drive)\WAC 005515072\4 - Design\Plan Set\3. Roadway\US84_RDW_SP59.dgn
PLOTTED: 12/21/2020

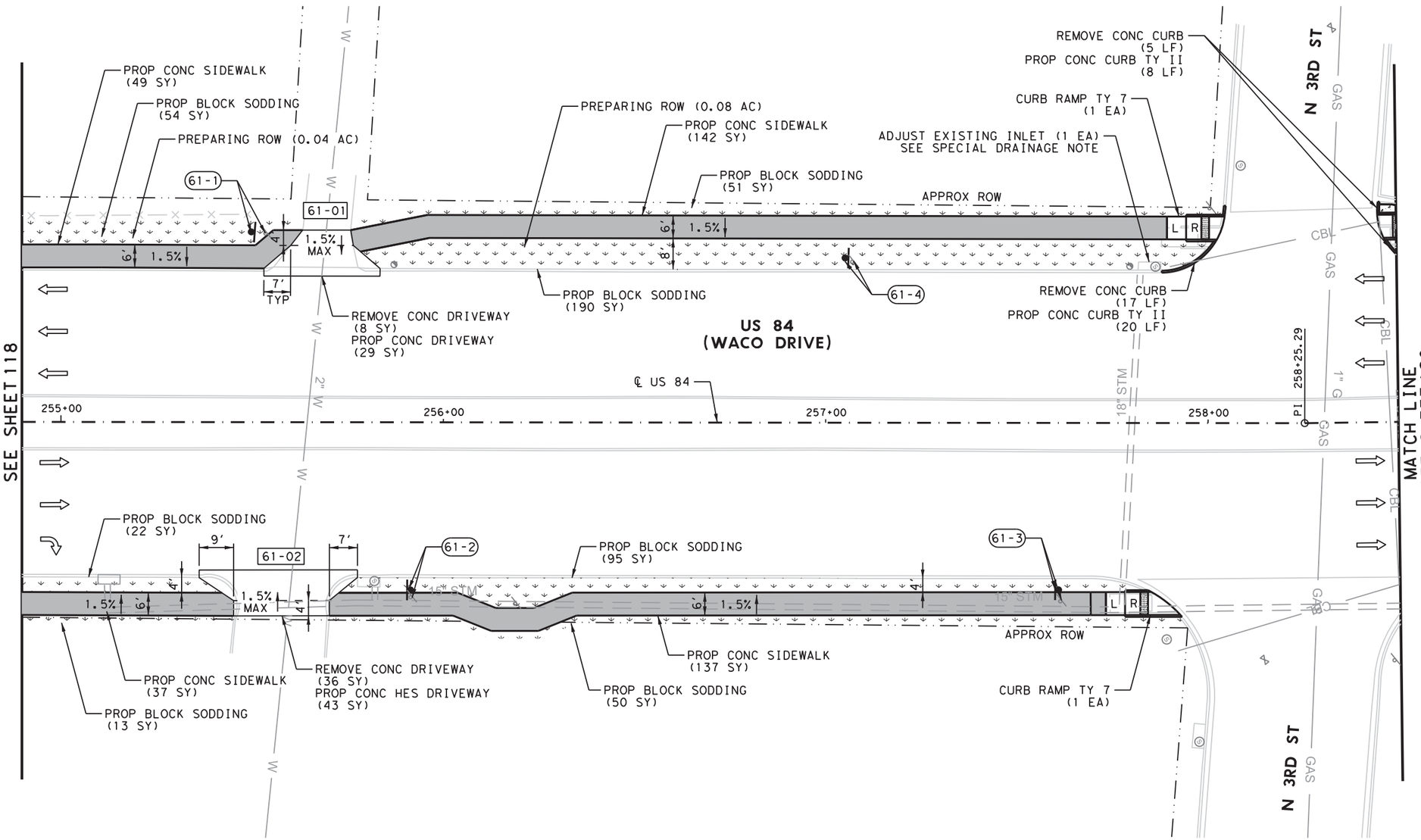

NOTES:

* FOR CONTRACTOR INFORMATION ONLY

1. LINEAR DIMENSIONS ARE TO THE BACK OF CURB.
2. RADII CALLOUTS ARE TO NOMINAL FACE OF CURB UNLESS NOTED OTHERWISE.
3. SIDEWALK CROSS SLOPE IS 1.5% USUAL. MAXIMUM ALLOWABLE CROSS SLOPE ON SIDEWALK IS 2.0%.
4. CONTRACTOR SHALL VERIFY ELEVATIONS AND DIMENSIONS IN THE FIELD PRIOR TO CONSTRUCTION.
5. THE INFORMATION SHOWN IN THESE PLANS CONCERNING TYPE AND LOCATION OF UTILITIES IS NOT GUARANTEED TO BE ACCURATE OR ALL INCLUSIVE. IT SHALL BE THE CONTRACTOR'S RESPONSIBILITY TO VERIFY AND LOCATE ALL EXISTING UTILITIES PRIOR TO CONSTRUCTION. THE CONTRACTOR WILL BE SOLELY RESPONSIBLE FOR ANY DAMAGES BY THEIR CONSTRUCTION OPERATIONS TO EXISTING UTILITIES.
6. REFER TO DRIVEWAY DETAILS, MISCELLANEOUS DETAILS, SIGNAL SHEETS, PAVEMENT MARKING SHEETS, SUMMARY OF SMALL SIGNS, AND TXDOT PED STANDARDS FOR ADDITIONAL INFORMATION.
7. PROPOSED SIGN LOCATIONS MAY BE ADJUSTED AS APPROVED BY THE ENGINEER.

03/01/2021

Kimley»Horn F-928

© 2021

Texas Department of Transportation

SPECIAL NOTES & DETAILS

SPECIAL DRAINAGE NOTE

REMOVE AND REBUILD EXISTING INLET TOP PER ITEM 479.3.1. MATCH EXISTING ELEVATIONS. REFER TO EXISTING CURB INLET DETAILS (TYPE E2) FOR ADDITIONAL INFORMATION.

LEGEND

APPROX ROW	L1	LANDING COMMON	R	RAMP
ELECTRIC BOX/VAULT	LS	LEVEL SIDEWALK (2% MAX)		RIPRAP (CONC)
ES EXIST SIDEWALK	SL	LONGITUDINAL SLOPES MAY NOT EXCEED 5% & CROSS SLOPES MAY NOT EXCEED 2%		SAWCUT LINE
ER EXISTING RAMP				SIDEWALK WALL
FENCE	RAD	RADIUS		SIGN (EXISTING)
FIRE HYDRANT	Ⓢ	MANHOLE	XX-X	SIGN NUMBER
F FLARE		PED SIGNAL POLE (EXIST)		TRAFFIC FLOW
Ⓖ GAS METER	●	PED SIGNAL POLE (PROP)		TRAF SIGNAL POLE (EXIST)
GUY ANCHOR		POWER/ILLUMINATION POLE		TRAF SIGNAL POLE (PROP)
HANDRAIL		PROPOSED ASPHALT PAVING	T	TRANSITION
L LANDING		PROPOSED CONCRETE PAVING		TREE/BUSHES
PROPOSED SMALL SIGN		PROPOSED SIDEWALK	Ⓦ	WATER METER

SIDEWALK LAYOUT

AT N 3RD ST

SHEET 61 OF 74

FED.RD. DIV.NO.	PROJECT ID.	HIGHWAY NO.
6	(SEE TITLE SHEET)	US 84

STATE	DIST.	COUNTY	SHEET NO.
TEXAS	WAC	MCLENNAN	119
CONT.	SECT.	JOB	
0055	15	072	

FILENAME: pw:\\kh-pw.bentley.com:kh-pw-01\Documents\01 Active Projects\TX-FTW-063586010 - US 84 (Waco Drive)\WAC 0055150724 - Design\Plan Set\3. Roadway\US84_RDW_SP60.dgn
PLOTTED: 12/21/2020

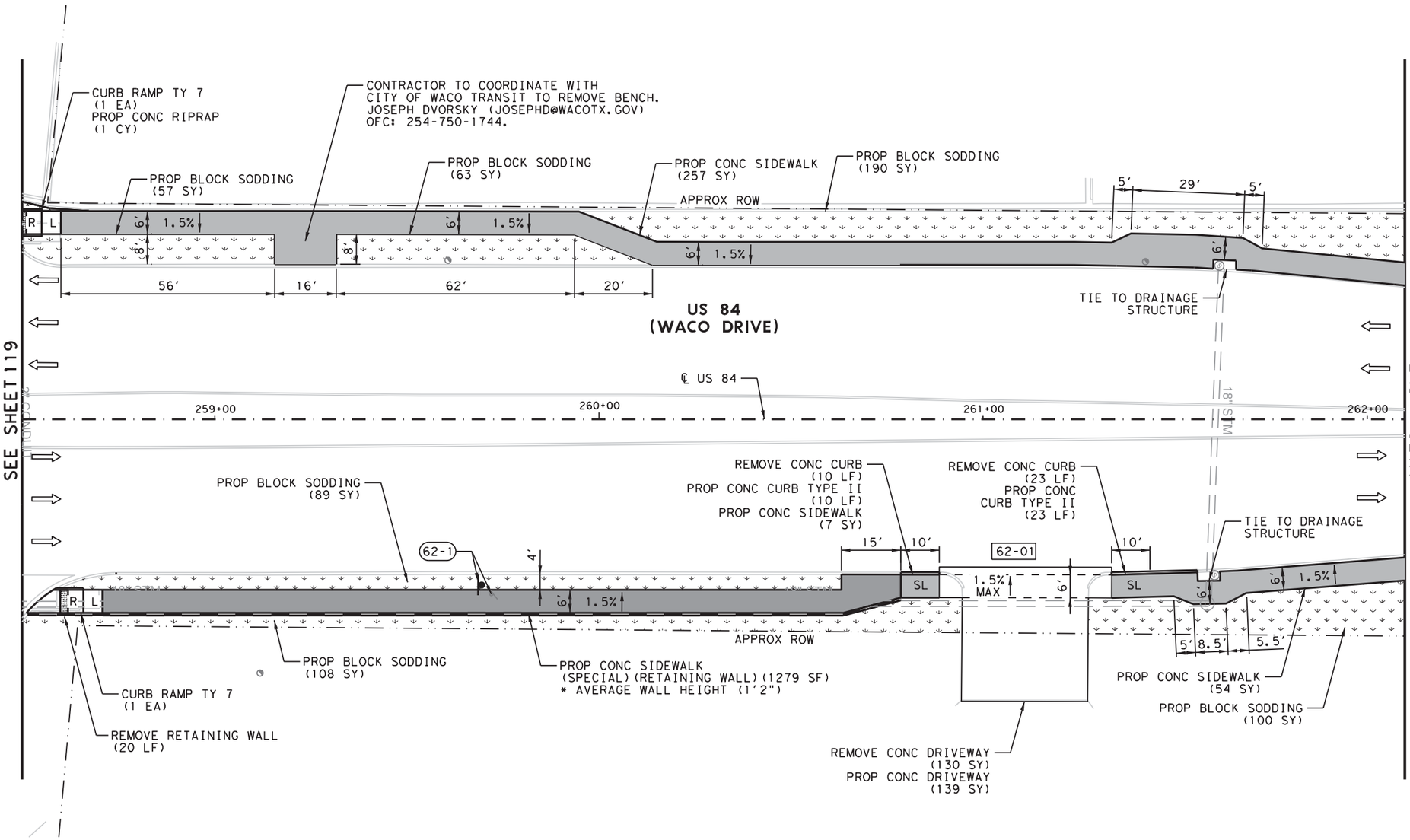

0' 15' 30'

SCALE

NOTES:

* FOR CONTRACTOR INFORMATION ONLY

1. LINEAR DIMENSIONS ARE TO THE BACK OF CURB.
2. RADII CALLOUTS ARE TO NOMINAL FACE OF CURB UNLESS NOTED OTHERWISE.
3. SIDEWALK CROSS SLOPE IS 1.5% USUAL. MAXIMUM ALLOWABLE CROSS SLOPE ON SIDEWALK IS 2.0%.
4. CONTRACTOR SHALL VERIFY ELEVATIONS AND DIMENSIONS IN THE FIELD PRIOR TO CONSTRUCTION.
5. THE INFORMATION SHOWN IN THESE PLANS CONCERNING TYPE AND LOCATION OF UTILITIES IS NOT GUARANTEED TO BE ACCURATE OR ALL INCLUSIVE. IT SHALL BE THE CONTRACTOR'S RESPONSIBILITY TO VERIFY AND LOCATE ALL EXISTING UTILITIES PRIOR TO CONSTRUCTION. THE CONTRACTOR WILL BE SOLELY RESPONSIBLE FOR ANY DAMAGES BY THEIR CONSTRUCTION OPERATIONS TO EXISTING UTILITIES.
6. REFER TO DRIVEWAY DETAILS, MISCELLANEOUS DETAILS, SIGNAL SHEETS, PAVEMENT MARKING SHEETS, SUMMARY OF SMALL SIGNS, AND TXDOT PED STANDARDS FOR ADDITIONAL INFORMATION.
7. PROPOSED SIGN LOCATIONS MAY BE ADJUSTED AS APPROVED BY THE ENGINEER.

STATE OF TEXAS
JOSHUA RUTH
103601
LICENSED
PROFESSIONAL ENGINEER

03/01/2021

Kimley»Horn F-928

© 2021

Texas Department of Transportation

SPECIAL NOTES & DETAILS

LEGEND

APPROX ROW	L1	LANDING COMMON	R	RAMP
ELECTRIC BOX/VAULT	LS	LEVEL SIDEWALK (2% MAX)		RIPRAP (CONC)
ES EXIST SIDEWALK	SL	LONGITUDINAL SLOPES MAY NOT EXCEED 5% & CROSS SLOPES MAY NOT EXCEED 2%		SAWCUT LINE
ER EXISTING RAMP				SIDEWALK WALL
FENCE	RAD	RADIUS		SIGN (EXISTING)
FIRE HYDRANT	Ⓢ	MANHOLE	XX-X	SIGN NUMBER
F FLARE		PED SIGNAL POLE (EXIST)		TRAFFIC FLOW
Ⓖ GAS METER	●	PED SIGNAL POLE (PROP)		TRAF SIGNAL POLE (EXIST)
GUY ANCHOR		POWER/ILLUMINATION POLE		TRAF SIGNAL POLE (PROP)
HANDRAIL		PROPOSED ASPHALT PAVING	T	TRANSITION
L LANDING		PROPOSED CONCRETE PAVING		TREE/BUSHES
PROPOSED SMALL SIGN		PROPOSED SIDEWALK	Ⓦ	WATER METER

SIDEWALK LAYOUT

BETWEEN N 3RD ST
AND N UNIVERSITY PARKS DR

SHEET 62 OF 74

FED.RD. DIV.NO.	PROJECT ID.	HIGHWAY NO.
6	(SEE TITLE SHEET)	US 84

STATE	DIST.	COUNTY	SHEET NO.
TEXAS	WAC	MCLENNAN	120
CONT.	SECT.	JOB	
0055	15	072	

FILENAME: pw:\\kh-pw.bentley.com:kh-pw-01\Documents\01 Active Projects\TX-FTW-063586010 - US 84 (Waco Drive)\WAC 0055150724 - Design\Plan Set\3. Roadway\US84_RDW_SP61.dgn
PLOTTED: 12/21/2020

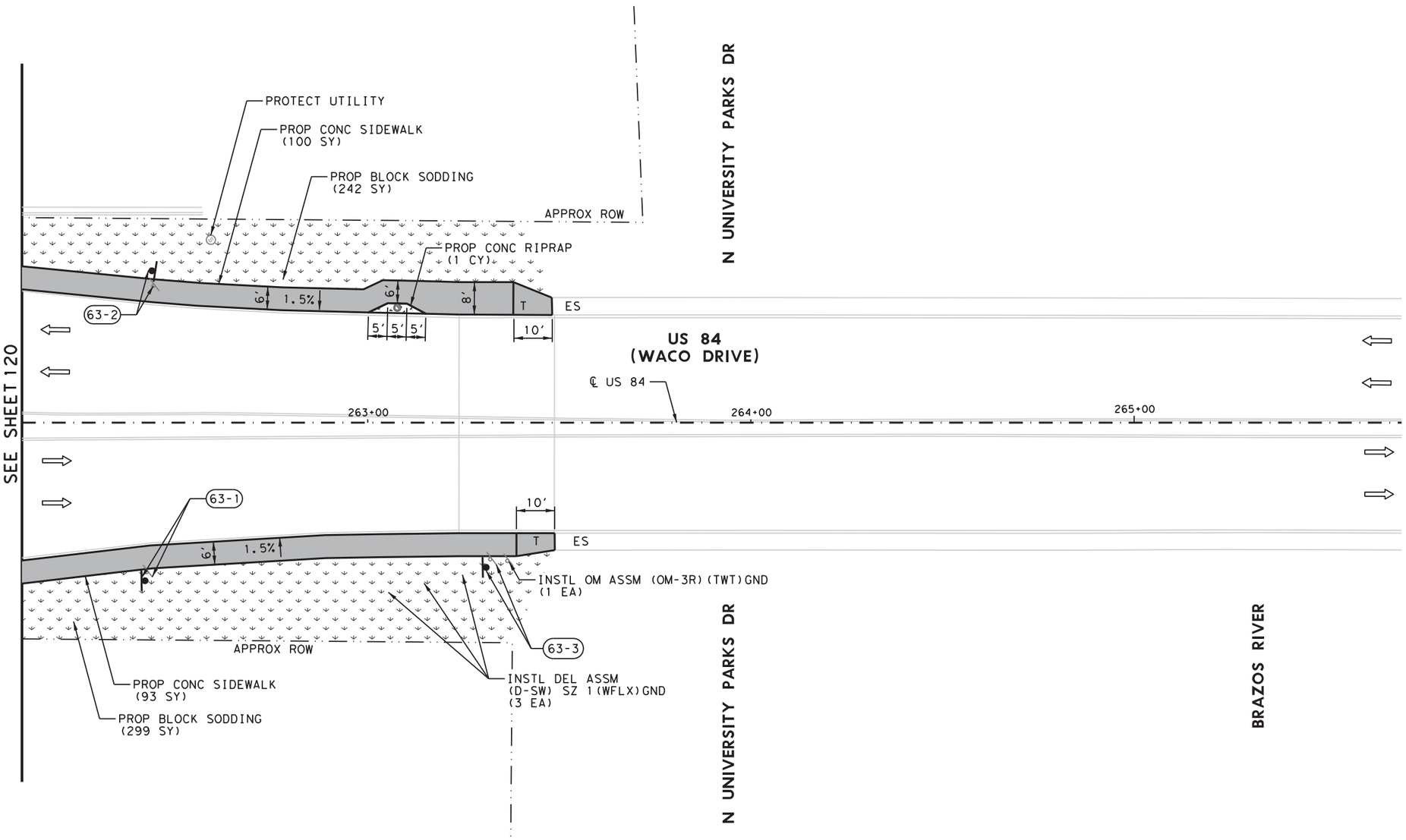

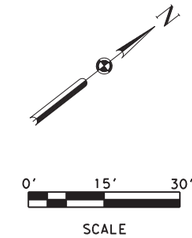

NOTES:

* FOR CONTRACTOR INFORMATION ONLY

1. LINEAR DIMENSIONS ARE TO THE BACK OF CURB.
2. RADII CALLOUTS ARE TO NOMINAL FACE OF CURB UNLESS NOTED OTHERWISE.
3. SIDEWALK CROSS SLOPE IS 1.5% USUAL. MAXIMUM ALLOWABLE CROSS SLOPE ON SIDEWALK IS 2.0%.
4. CONTRACTOR SHALL VERIFY ELEVATIONS AND DIMENSIONS IN THE FIELD PRIOR TO CONSTRUCTION.
5. THE INFORMATION SHOWN IN THESE PLANS CONCERNING TYPE AND LOCATION OF UTILITIES IS NOT GUARANTEED TO BE ACCURATE OR ALL INCLUSIVE. IT SHALL BE THE CONTRACTOR'S RESPONSIBILITY TO VERIFY AND LOCATE ALL EXISTING UTILITIES PRIOR TO CONSTRUCTION. THE CONTRACTOR WILL BE SOLELY RESPONSIBLE FOR ANY DAMAGES BY THEIR CONSTRUCTION OPERATIONS TO EXISTING UTILITIES.
6. REFER TO DRIVEWAY DETAILS, MISCELLANEOUS DETAILS, SIGNAL SHEETS, PAVEMENT MARKING SHEETS, SUMMARY OF SMALL SIGNS, AND TXDOT PED STANDARDS FOR ADDITIONAL INFORMATION.
7. PROPOSED SIGN LOCATIONS MAY BE ADJUSTED AS APPROVED BY THE ENGINEER.

STATE OF TEXAS SETH T. RUTLEDGE 129231 LICENSED PROFESSIONAL ENGINEER

03/08/2021

Kimley»Horn F-928

© 2021

Texas Department of Transportation

SPECIAL NOTES & DETAILS

LEGEND

— · ·	APPROX ROW	L1	LANDING COMMON	R	RAMP
	ELECTRIC BOX/VAULT	LS	LEVEL SIDEWALK (2% MAX)		RIPRAP (CONC)
ES	EXIST SIDEWALK	SL	LONGITUDINAL SLOPES MAY NOT EXCEED 5% & CROSS SLOPES MAY NOT EXCEED 2%		SAWCUT LINE
ER	EXISTING RAMP				SIDEWALK WALL
—×—	FENCE	RAD	RADIUS		SIGN (EXISTING)
	FIRE HYDRANT	S	MANHOLE	XX-X	SIGN NUMBER
F	FLARE		PED SIGNAL POLE (EXIST)		TRAFFIC FLOW
G	GAS METER		PED SIGNAL POLE (PROP)		TRAF SIGNAL POLE (EXIST)
	GUY ANCHOR		POWER/ILLUMINATION POLE		TRAF SIGNAL POLE (PROP)
	HANDRAIL		PROPOSED ASPHALT PAVING	T	TRANSITION
L	LANDING		PROPOSED CONCRETE PAVING		TREE/BUSHES
	PROPOSED SMALL SIGN		PROPOSED SIDEWALK	W	WATER METER

SIDEWALK LAYOUT

AT N UNIVERSITY PARKS DR

SHEET 63 OF 74

FED. RD. DIV. NO.	PROJECT ID.	HIGHWAY NO.
6	(SEE TITLE SHEET)	US 84

STATE	DIST.	COUNTY	SHEET NO.
TEXAS	WAC	MCLENNAN	121
CONT.	SECT.	JOB	
0055	15	072	

FILENAME: pw:\\kh-pw.bentley.com:kh-pw-01\Documents\01 Active Projects\TX-FTW-063586010 - US 84 (Waco Drive)\WAC 005515072\4 - Design\Plan Set\3. Roadway\US84_RDW_SP62.dgn
PLOTTED: 12/21/2020

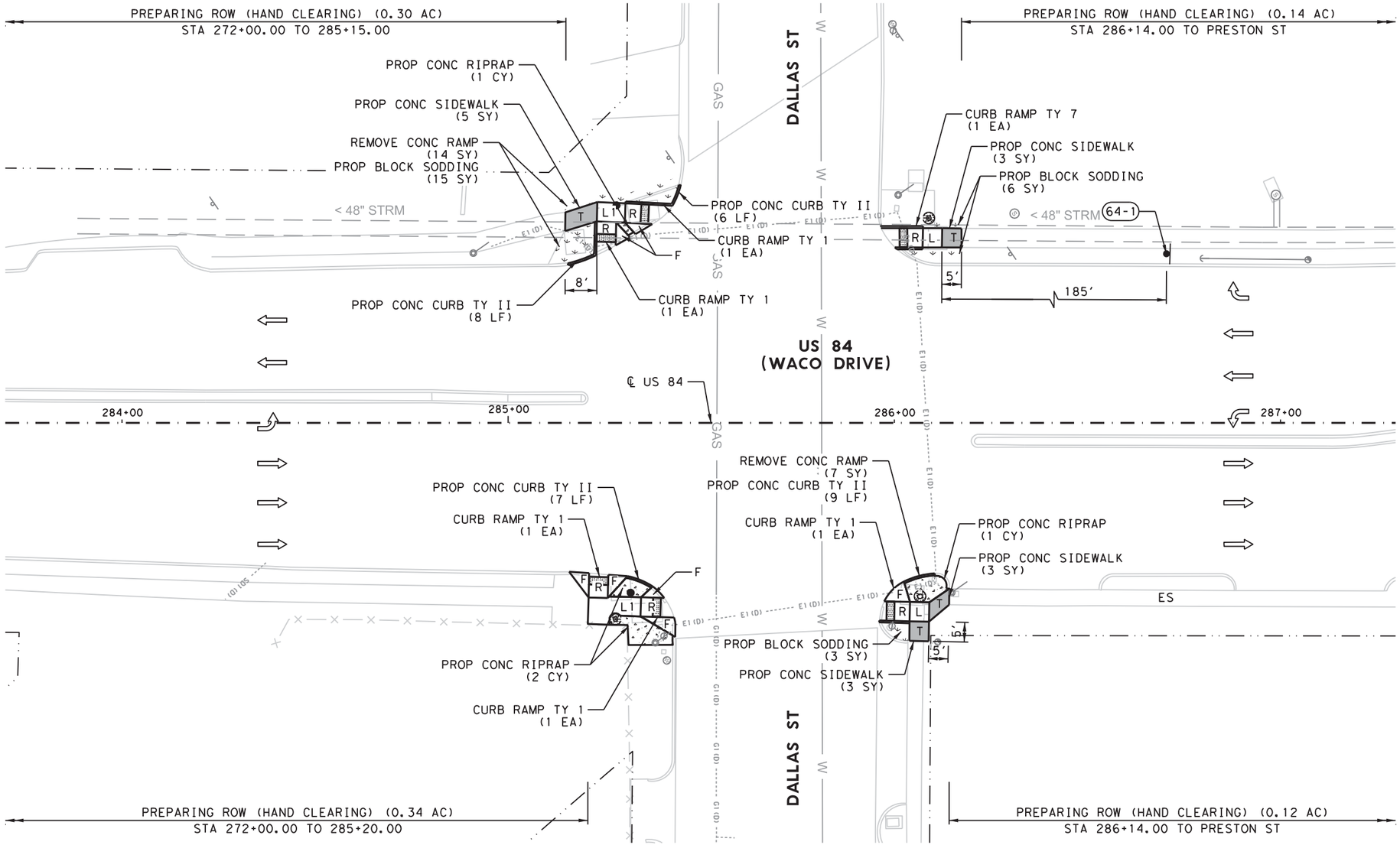

0' 15' 30'

SCALE

NOTES:

* FOR CONTRACTOR INFORMATION ONLY

1. LINEAR DIMENSIONS ARE TO THE BACK OF CURB.
2. RADII CALLOUTS ARE TO NOMINAL FACE OF CURB UNLESS NOTED OTHERWISE.
3. SIDEWALK CROSS SLOPE IS 1.5% USUAL. MAXIMUM ALLOWABLE CROSS SLOPE ON SIDEWALK IS 2.0%.
4. CONTRACTOR SHALL VERIFY ELEVATIONS AND DIMENSIONS IN THE FIELD PRIOR TO CONSTRUCTION.
5. THE INFORMATION SHOWN IN THESE PLANS CONCERNING TYPE AND LOCATION OF UTILITIES IS NOT GUARANTEED TO BE ACCURATE OR ALL INCLUSIVE. IT SHALL BE THE CONTRACTOR'S RESPONSIBILITY TO VERIFY AND LOCATE ALL EXISTING UTILITIES PRIOR TO CONSTRUCTION. THE CONTRACTOR WILL BE SOLELY RESPONSIBLE FOR ANY DAMAGES BY THEIR CONSTRUCTION OPERATIONS TO EXISTING UTILITIES.
6. REFER TO DRIVEWAY DETAILS, MISCELLANEOUS DETAILS, SIGNAL SHEETS, PAVEMENT MARKING SHEETS, SUMMARY OF SMALL SIGNS, AND TXDOT PED STANDARDS FOR ADDITIONAL INFORMATION.
7. PROPOSED SIGN LOCATIONS MAY BE ADJUSTED AS APPROVED BY THE ENGINEER.

03/01/2021

Kimley»Horn F-928

© 2021

Texas Department of Transportation

SPECIAL NOTES & DETAILS

LEGEND

APPROX ROW	L1	LANDING COMMON	R	RAMP
ELECTRIC BOX/VAULT	LS	LEVEL SIDEWALK (2% MAX)		RIPRAP (CONC)
ES EXIST SIDEWALK	SL	LONGITUDINAL SLOPES MAY NOT EXCEED 5% & CROSS SLOPES MAY NOT EXCEED 2%		SAWCUT LINE
ER EXISTING RAMP				SIDEWALK WALL
FENCE	RAD	RADIUS		SIGN (EXISTING)
FIRE HYDRANT	Ⓢ	MANHOLE	XX-X	SIGN NUMBER
F FLARE		PED SIGNAL POLE (EXIST)		TRAFFIC FLOW
Ⓖ GAS METER		PED SIGNAL POLE (PROP)		TRAF SIGNAL POLE (EXIST)
GUY ANCHOR		POWER/ILLUMINATION POLE		TRAF SIGNAL POLE (PROP)
HANDRAIL		PROPOSED ASPHALT PAVING	T	TRANSITION
L LANDING		PROPOSED CONCRETE PAVING		TREE/BUSHES
PROPOSED SMALL SIGN		PROPOSED SIDEWALK	Ⓦ	WATER METER

SIDEWALK LAYOUT

AT DALLAS STREET

SHEET 64 OF 74

FED.RD. DIV.NO.	PROJECT ID.	HIGHWAY NO.
6	(SEE TITLE SHEET)	US 84

STATE	DIST.	COUNTY	SHEET NO.
TEXAS	WAC	MCLENNAN	122
CONT.	SECT.	JOB	
0055	15	072	

FILENAME: pw:\\kh-pw.bentley.com:kh-pw-01\Documents\01 Active Projects\TX-FTW-063586010 - US 84 (Waco Drive)\WAC 0055150724 - Design\Plan Set\3. Roadway\US84_RDW_SP63.dgn
PLOTTED: 12/21/2020

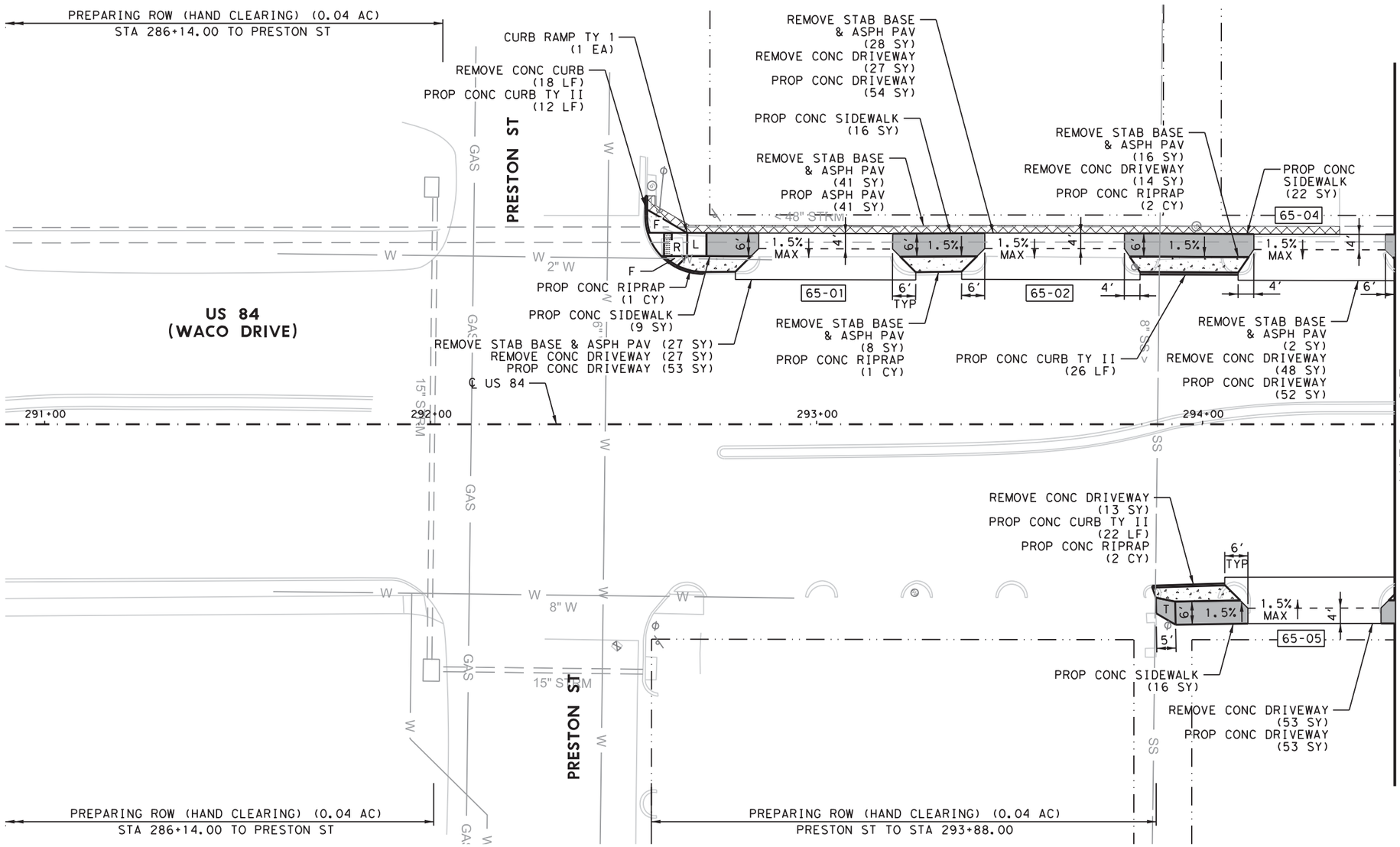

0' 15' 30'

SCALE

NOTES:

* FOR CONTRACTOR INFORMATION ONLY

1. LINEAR DIMENSIONS ARE TO THE BACK OF CURB.
2. RADII CALLOUTS ARE TO NOMINAL FACE OF CURB UNLESS NOTED OTHERWISE.
3. SIDEWALK CROSS SLOPE IS 1.5% USUAL. MAXIMUM ALLOWABLE CROSS SLOPE ON SIDEWALK IS 2.0%.
4. CONTRACTOR SHALL VERIFY ELEVATIONS AND DIMENSIONS IN THE FIELD PRIOR TO CONSTRUCTION.
5. THE INFORMATION SHOWN IN THESE PLANS CONCERNING TYPE AND LOCATION OF UTILITIES IS NOT GUARANTEED TO BE ACCURATE OR ALL INCLUSIVE. IT SHALL BE THE CONTRACTOR'S RESPONSIBILITY TO VERIFY AND LOCATE ALL EXISTING UTILITIES PRIOR TO CONSTRUCTION. THE CONTRACTOR WILL BE SOLELY RESPONSIBLE FOR ANY DAMAGES BY THEIR CONSTRUCTION OPERATIONS TO EXISTING UTILITIES.
6. REFER TO DRIVEWAY DETAILS, MISCELLANEOUS DETAILS, SIGNAL SHEETS, PAVEMENT MARKING SHEETS, SUMMARY OF SMALL SIGNS, AND TXDOT PED STANDARDS FOR ADDITIONAL INFORMATION.
7. PROPOSED SIGN LOCATIONS MAY BE ADJUSTED AS APPROVED BY THE ENGINEER.

STATE OF TEXAS — ANTHONY RUTH — 29201 — LICENSED PROFESSIONAL ENGINEER

03/01/2021

Kimley»Horn F-928

© 2021

Texas Department of Transportation

SPECIAL NOTES & DETAILS

LEGEND

APPROX ROW	L1	LANDING COMMON	R	RAMP
ELECTRIC BOX/VAULT	LS	LEVEL SIDEWALK (2% MAX)		RIPRAP (CONC)
ES EXIST SIDEWALK	SL	LONGITUDINAL SLOPES MAY NOT EXCEED 5% & CROSS SLOPES MAY NOT EXCEED 2%		SAWCUT LINE
ER EXISTING RAMP				SIDEWALK WALL
FENCE	RAD	RADIUS		SIGN (EXISTING)
FIRE HYDRANT	Ⓢ	MANHOLE	XX-X	SIGN NUMBER
F FLARE		PED SIGNAL POLE (EXIST)		TRAFFIC FLOW
Ⓖ GAS METER	●	PED SIGNAL POLE (PROP)		TRAF SIGNAL POLE (EXIST)
GUY ANCHOR		POWER/ILLUMINATION POLE		TRAF SIGNAL POLE (PROP)
HANDRAIL		PROPOSED ASPHALT PAVING	T	TRANSITION
L LANDING		PROPOSED CONCRETE PAVING		TREE/BUSHES
PROPOSED SMALL SIGN		PROPOSED SIDEWALK	Ⓦ	WATER METER

SIDEWALK LAYOUT

AT PRESTON ST

SHEET 65 OF 74

FED.RD. DIV.NO.	PROJECT ID.	HIGHWAY NO.
6	(SEE TITLE SHEET)	US 84

STATE	DIST.	COUNTY	SHEET NO.
TEXAS	WAC	MCLENNAN	123
CONT.	SECT.	JOB	
0055	15	072	

FILENAME: pw:\\kh-pw.bentley.com:kh-pw-01\Documents\01 Active Projects\TX-FTW-063586010 - US 84 (Waco Drive)\WAC 0055150721\4 - Design\Plan Set\3. Roadway\US84_RDW_SP64.dgn
PLOTTED: 12/21/2020

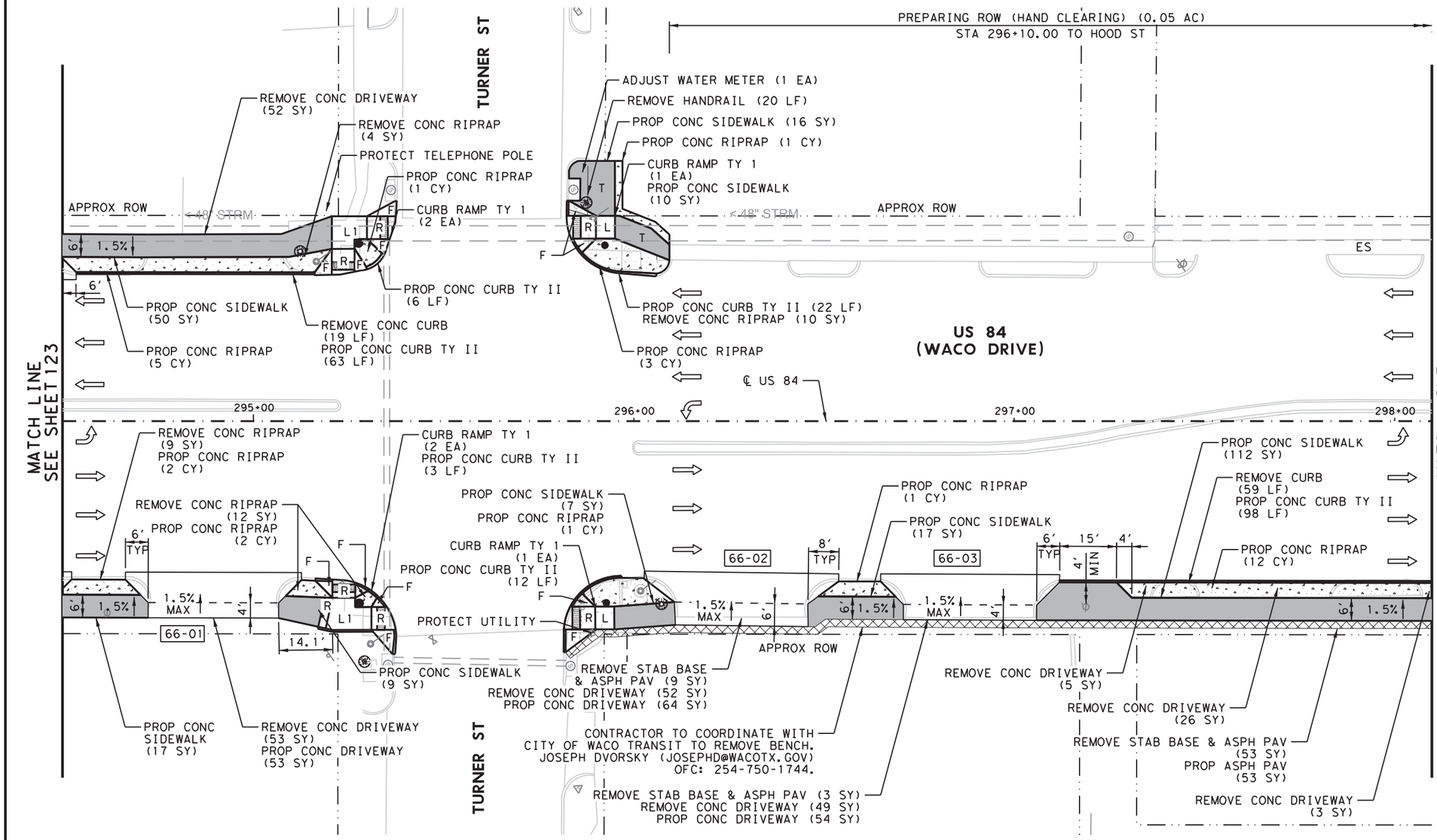

0' 15' 30'

SCALE

NOTES:

* FOR CONTRACTOR INFORMATION ONLY

1. LINEAR DIMENSIONS ARE TO THE BACK OF CURB.
2. RADII CALLOUTS ARE TO NOMINAL FACE OF CURB UNLESS NOTED OTHERWISE.
3. SIDEWALK CROSS SLOPE IS 1.5% USUAL. MAXIMUM ALLOWABLE CROSS SLOPE ON SIDEWALK IS 2.0%.
4. CONTRACTOR SHALL VERIFY ELEVATIONS AND DIMENSIONS IN THE FIELD PRIOR TO CONSTRUCTION.
5. THE INFORMATION SHOWN IN THESE PLANS CONCERNING TYPE AND LOCATION OF UTILITIES IS NOT GUARANTEED TO BE ACCURATE OR ALL INCLUSIVE. IT SHALL BE THE CONTRACTOR'S RESPONSIBILITY TO VERIFY AND LOCATE ALL EXISTING UTILITIES PRIOR TO CONSTRUCTION. THE CONTRACTOR WILL BE SOLELY RESPONSIBLE FOR ANY DAMAGES BY THEIR CONSTRUCTION OPERATIONS TO EXISTING UTILITIES.
6. REFER TO DRIVEWAY DETAILS, MISCELLANEOUS DETAILS, SIGNAL SHEETS, PAVEMENT MARKING SHEETS, SUMMARY OF SMALL SIGNS, AND TXDOT PED STANDARDS FOR ADDITIONAL INFORMATION.
7. PROPOSED SIGN LOCATIONS MAY BE ADJUSTED AS APPROVED BY THE ENGINEER.

03/01/2021

Kimley»Horn F-928

© 2021

Texas Department of Transportation

SPECIAL NOTES & DETAILS

LEGEND

APPROX ROW	L1	LANDING COMMON	R	RAMP
ELECTRIC BOX/VAULT	LS	LEVEL SIDEWALK (2% MAX)		RIPRAP (CONC)
ES EXIST SIDEWALK	SL	LONGITUDINAL SLOPES MAY NOT EXCEED 5% & CROSS SLOPES MAY NOT EXCEED 2%		SAWCUT LINE
ER EXISTING RAMP				SIDEWALK WALL
FENCE	RAD	RADIUS		SIGN (EXISTING)
FIRE HYDRANT		MANHOLE	XX-X	SIGN NUMBER
F FLARE		PED SIGNAL POLE (EXIST)		TRAFFIC FLOW
GAS METER		PED SIGNAL POLE (PROP)		TRAF SIGNAL POLE (EXIST)
GUY ANCHOR		POWER/ILLUMINATION POLE		TRAF SIGNAL POLE (PROP)
HANDRAIL		PROPOSED ASPHALT PAVING	T	TRANSITION
L LANDING		PROPOSED CONCRETE PAVING		TREE/BUSHES
PROPOSED SMALL SIGN		PROPOSED SIDEWALK	W	WATER METER

SIDEWALK LAYOUT

AT TURNER ST

SHEET 66 OF 74

FED.RD. DIV.NO.	PROJECT ID.	HIGHWAY NO.
6	(SEE TITLE SHEET)	US 84

STATE	DIST.	COUNTY	SHEET NO.
TEXAS	WAC	MCLENNAN	124
CONT.	SECT.	JOB	
0055	15	072	

FILENAME: pw:\\kh-pw.bentley.com:kh-pw-01\Documents\01 Active Projects\TX-FTW-063586010 - US 84 (Waco Drive)\WAC 0055150724 - Design\Plan Set\3. Roadway\US84_RDW_SP65.dgn
PLOTTED: 12/21/2020

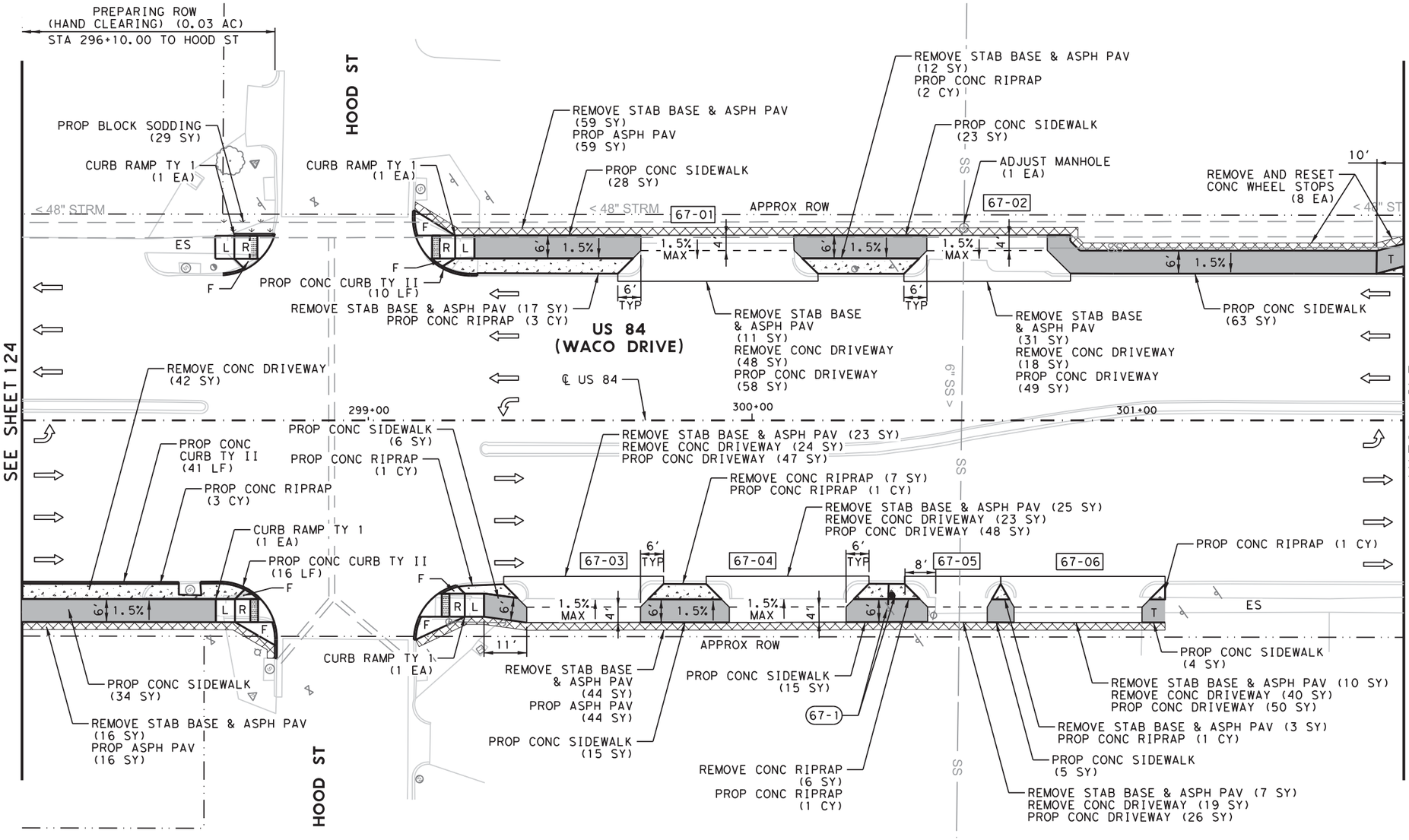

N

0' 15' 30'

SCALE

NOTES:

* FOR CONTRACTOR INFORMATION ONLY

1. LINEAR DIMENSIONS ARE TO THE BACK OF CURB.
2. RADII CALLOUTS ARE TO NOMINAL FACE OF CURB UNLESS NOTED OTHERWISE.
3. SIDEWALK CROSS SLOPE IS 1.5% USUAL. MAXIMUM ALLOWABLE CROSS SLOPE ON SIDEWALK IS 2.0%.
4. CONTRACTOR SHALL VERIFY ELEVATIONS AND DIMENSIONS IN THE FIELD PRIOR TO CONSTRUCTION.
5. THE INFORMATION SHOWN IN THESE PLANS CONCERNING TYPE AND LOCATION OF UTILITIES IS NOT GUARANTEED TO BE ACCURATE OR ALL INCLUSIVE. IT SHALL BE THE CONTRACTOR'S RESPONSIBILITY TO VERIFY AND LOCATE ALL EXISTING UTILITIES PRIOR TO CONSTRUCTION. THE CONTRACTOR WILL BE SOLELY RESPONSIBLE FOR ANY DAMAGES BY THEIR CONSTRUCTION OPERATIONS TO EXISTING UTILITIES.
6. REFER TO DRIVEWAY DETAILS, MISCELLANEOUS DETAILS, SIGNAL SHEETS, PAVEMENT MARKING SHEETS, SUMMARY OF SMALL SIGNS, AND TXDOT PED STANDARDS FOR ADDITIONAL INFORMATION.
7. PROPOSED SIGN LOCATIONS MAY BE ADJUSTED AS APPROVED BY THE ENGINEER.

03/01/2021

Kimley»Horn F-928

© 2021

Texas Department of Transportation

SPECIAL NOTES & DETAILS

LEGEND

APPROX ROW	L1	LANDING COMMON	R	RAMP
ELECTRIC BOX/VAULT	LS	LEVEL SIDEWALK (2% MAX)		RIPRAP (CONC)
ES EXIST SIDEWALK	SL	LONGITUDINAL SLOPES MAY NOT EXCEED 5% & CROSS SLOPES MAY NOT EXCEED 2%		SAWCUT LINE
ER EXISTING RAMP				SIDEWALK WALL
FENCE	RAD	RADIUS		SIGN (EXISTING)
FIRE HYDRANT	Ⓢ	MANHOLE	XX-X	SIGN NUMBER
F FLARE		PED SIGNAL POLE (EXIST)		TRAFFIC FLOW
Ⓖ GAS METER	●	PED SIGNAL POLE (PROP)		TRAF SIGNAL POLE (EXIST)
GUY ANCHOR		POWER/ILLUMINATION POLE		TRAF SIGNAL POLE (PROP)
HANDRAIL		PROPOSED ASPHALT PAVING	T	TRANSITION
L LANDING		PROPOSED CONCRETE PAVING		TREE/BUSHES
PROPOSED SMALL SIGN		PROPOSED SIDEWALK	Ⓦ	WATER METER

SIDEWALK LAYOUT

AT HOOD ST

SHEET 67 OF 74

FED. RD. DIV. NO.	PROJECT ID.	HIGHWAY NO.
6	(SEE TITLE SHEET)	US 84

STATE	DIST.	COUNTY	SHEET NO.
TEXAS	WAC	MCLENNAN	125
CONT.	SECT.	JOB	
0055	15	072	

FILENAME: pw:\\kh-pw.bentley.com:kh-pw-01\Documents\01 Active Projects\TX-FTW-063586010 - US 84 (Waco Drive)\WAC 005515072\4 - Design\Plan Set\3. Roadway\US84_RDW_SP66.dgn
PLOTTED: 12/21/2020

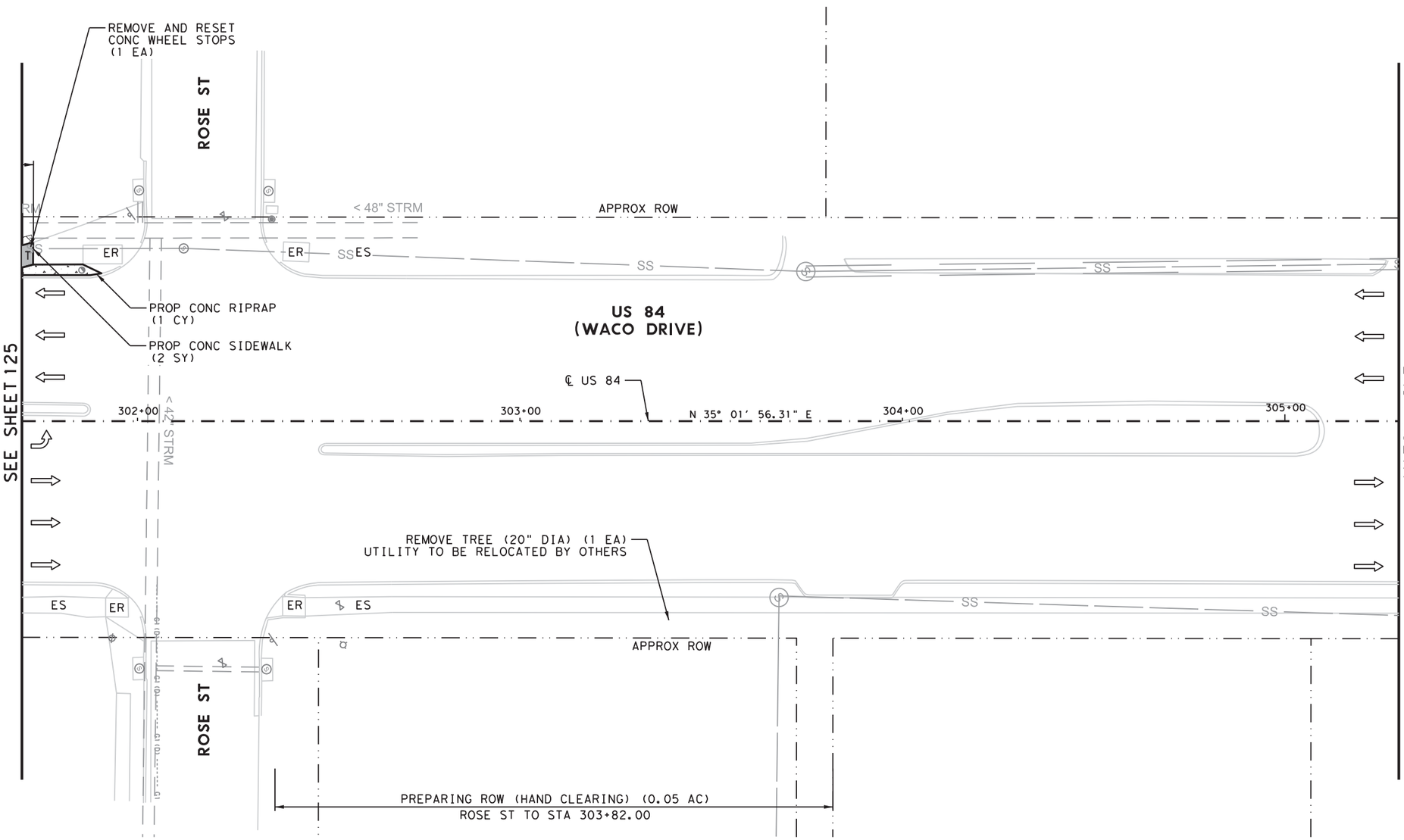

0' 15' 30'

SCALE

NOTES:

* FOR CONTRACTOR INFORMATION ONLY

1. LINEAR DIMENSIONS ARE TO THE BACK OF CURB.
2. RADII CALLOUTS ARE TO NOMINAL FACE OF CURB UNLESS NOTED OTHERWISE.
3. SIDEWALK CROSS SLOPE IS 1.5% USUAL. MAXIMUM ALLOWABLE CROSS SLOPE ON SIDEWALK IS 2.0%.
4. CONTRACTOR SHALL VERIFY ELEVATIONS AND DIMENSIONS IN THE FIELD PRIOR TO CONSTRUCTION.
5. THE INFORMATION SHOWN IN THESE PLANS CONCERNING TYPE AND LOCATION OF UTILITIES IS NOT GUARANTEED TO BE ACCURATE OR ALL INCLUSIVE. IT SHALL BE THE CONTRACTOR'S RESPONSIBILITY TO VERIFY AND LOCATE ALL EXISTING UTILITIES PRIOR TO CONSTRUCTION. THE CONTRACTOR WILL BE SOLELY RESPONSIBLE FOR ANY DAMAGES BY THEIR CONSTRUCTION OPERATIONS TO EXISTING UTILITIES.
6. REFER TO DRIVEWAY DETAILS, MISCELLANEOUS DETAILS, SIGNAL SHEETS, PAVEMENT MARKING SHEETS, SUMMARY OF SMALL SIGNS, AND TXDOT PED STANDARDS FOR ADDITIONAL INFORMATION.
7. PROPOSED SIGN LOCATIONS MAY BE ADJUSTED AS APPROVED BY THE ENGINEER.

STATE OF TEXAS — JAMES RUTH — 5983 — LICENSED PROFESSIONAL ENGINEER

03/01/2021

Kimley»Horn F-928

© 2021

Texas Department of Transportation

SPECIAL NOTES & DETAILS

LEGEND

APPROX ROW		L1	LANDING COMMON	R	RAMP
ELECTRIC BOX/VAULT		LS	LEVEL SIDEWALK (2% MAX)		RIPRAP (CONC)
ES	EXIST SIDEWALK	SL	LONGITUDINAL SLOPES MAY NOT EXCEED 5% & CROSS SLOPES MAY NOT EXCEED 2%		SAWCUT LINE
ER	EXISTING RAMP				SIDEWALK WALL
FENCE		RAD	RADIUS		SIGN (EXISTING)
FIRE HYDRANT			MANHOLE	XX-X	SIGN NUMBER
F	FLARE		PED SIGNAL POLE (EXIST)		TRAFFIC FLOW
G	GAS METER		PED SIGNAL POLE (PROP)		TRAF SIGNAL POLE (EXIST)
	GUY ANCHOR		POWER/ILLUMINATION POLE		TRAF SIGNAL POLE (PROP)
	HANDRAIL		PROPOSED ASPHALT PAVING	T	TRANSITION
L	LANDING		PROPOSED CONCRETE PAVING		TREE/BUSHES
	PROPOSED SMALL SIGN		PROPOSED SIDEWALK	W	WATER METER

SIDEWALK LAYOUT

AT ROSE ST

SHEET 68 OF 74

FED. RD. DIV. NO.	PROJECT ID.	HIGHWAY NO.
6	(SEE TITLE SHEET)	US 84

STATE	DIST.	COUNTY	SHEET NO.
TEXAS	WAC	MCLENNAN	126
CONT.	SECT.	JOB	
0055	15	072	

FILENAME: pw:\\kh-pw.bentley.com:kh-pw-01\Documents\01 Active Projects\TX-FTW-063586010 - US 84 (Waco Drive)\WAC 0055150724 - Design\Plan Set\3. Roadway\US84_RDW_SP67.dgn
PLOTTED: 12/21/2020

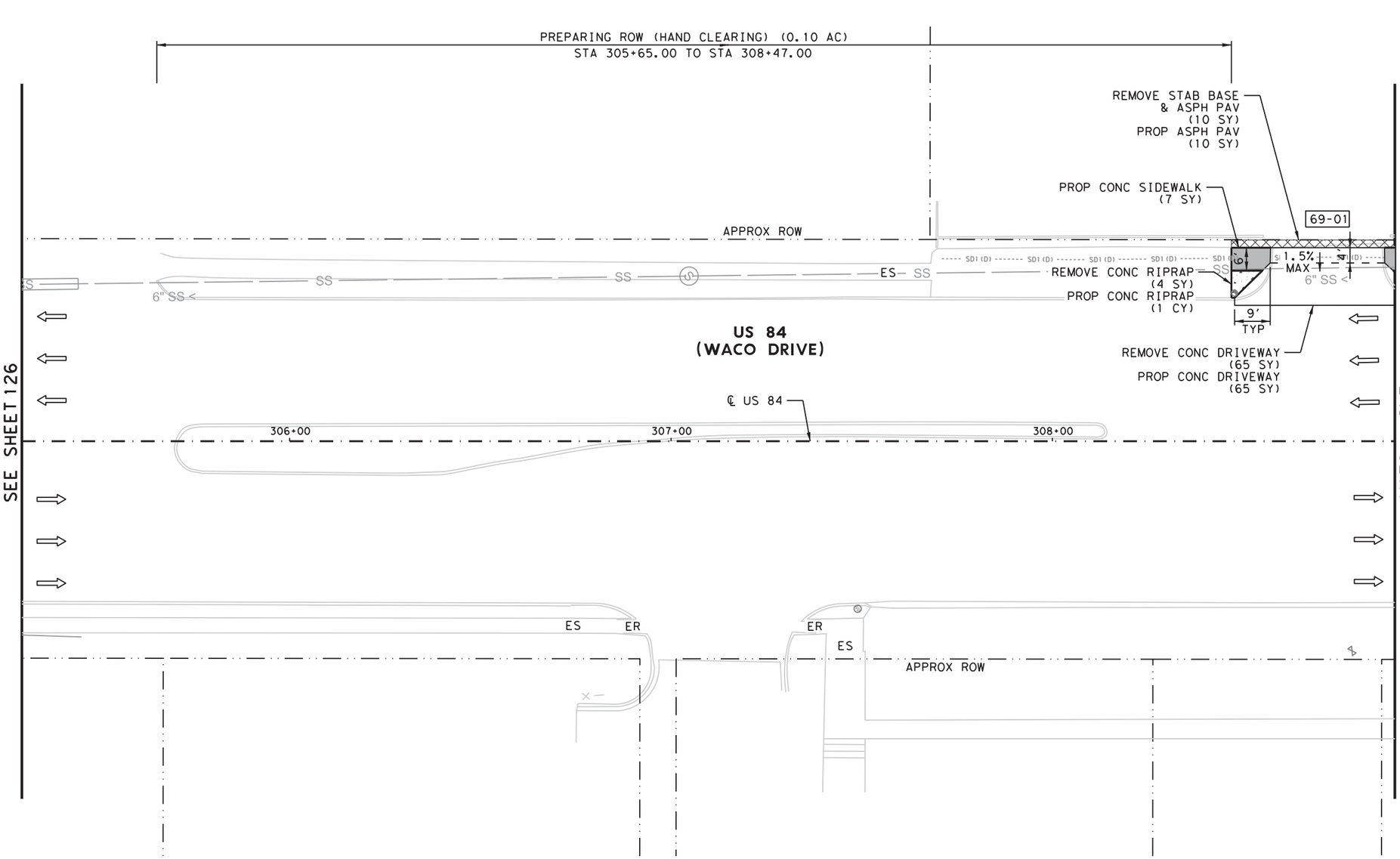

NOTES:

* FOR CONTRACTOR INFORMATION ONLY

1. LINEAR DIMENSIONS ARE TO THE BACK OF CURB.
2. RADII CALLOUTS ARE TO NOMINAL FACE OF CURB UNLESS NOTED OTHERWISE.
3. SIDEWALK CROSS SLOPE IS 1.5% USUAL. MAXIMUM ALLOWABLE CROSS SLOPE ON SIDEWALK IS 2.0%.
4. CONTRACTOR SHALL VERIFY ELEVATIONS AND DIMENSIONS IN THE FIELD PRIOR TO CONSTRUCTION.
5. THE INFORMATION SHOWN IN THESE PLANS CONCERNING TYPE AND LOCATION OF UTILITIES IS NOT GUARANTEED TO BE ACCURATE OR ALL INCLUSIVE. IT SHALL BE THE CONTRACTOR'S RESPONSIBILITY TO VERIFY AND LOCATE ALL EXISTING UTILITIES PRIOR TO CONSTRUCTION. THE CONTRACTOR WILL BE SOLELY RESPONSIBLE FOR ANY DAMAGES BY THEIR CONSTRUCTION OPERATIONS TO EXISTING UTILITIES.
6. REFER TO DRIVEWAY DETAILS, MISCELLANEOUS DETAILS, SIGNAL SHEETS, PAVEMENT MARKING SHEETS, SUMMARY OF SMALL SIGNS, AND TXDOT PED STANDARDS FOR ADDITIONAL INFORMATION.
7. PROPOSED SIGN LOCATIONS MAY BE ADJUSTED AS APPROVED BY THE ENGINEER.

03/01/2021

Kimley»Horn F-928

© 2021

Texas Department of Transportation

SPECIAL NOTES & DETAILS

LEGEND

APPROX ROW		L1	LANDING COMMON	R	RAMP
ELECTRIC BOX/VAULT		LS	LEVEL SIDEWALK (2% MAX)		RIPRAP (CONC)
ES	EXIST SIDEWALK	SL	LONGITUDINAL SLOPES MAY NOT EXCEED 5% & CROSS SLOPES MAY NOT EXCEED 2%		SAWCUT LINE
ER	EXISTING RAMP				SIDEWALK WALL
FENCE		RAD	RADIUS		SIGN (EXISTING)
FIRE HYDRANT		Ⓢ	MANHOLE	XX-X	SIGN NUMBER
F	FLARE		PED SIGNAL POLE (EXIST)		TRAFFIC FLOW
Ⓖ	GAS METER	●	PED SIGNAL POLE (PROP)		TRAF SIGNAL POLE (EXIST)
	GUY ANCHOR		POWER/ILLUMINATION POLE		TRAF SIGNAL POLE (PROP)
	HANDRAIL		PROPOSED ASPHALT PAVING	T	TRANSITION
L	LANDING		PROPOSED CONCRETE PAVING		TREE/BUSHES
	PROPOSED SMALL SIGN		PROPOSED SIDEWALK	Ⓦ	WATER METER

SIDEWALK LAYOUT

BETWEEN ROSE ST
AND GARRISON ST

SHEET 69 OF 74

FED.RD. DIV.NO.	PROJECT ID.	HIGHWAY NO.
6	(SEE TITLE SHEET)	US 84

STATE	DIST.	COUNTY	SHEET NO.
TEXAS	WAC	MCLENNAN	127
CONT.	SECT.	JOB	
0055	15	072	

FILENAME: pw:\\kh-pw.bentley.com:kh-pw-01\Documents\01 Active Projects\TX-FTW-063586010 - US 84 (Waco Drive)\WAC 0055150724 - Design\Plan Set\3. Roadway\US84_RDW_SP68.dgn
PLOTTED: 12/21/2020

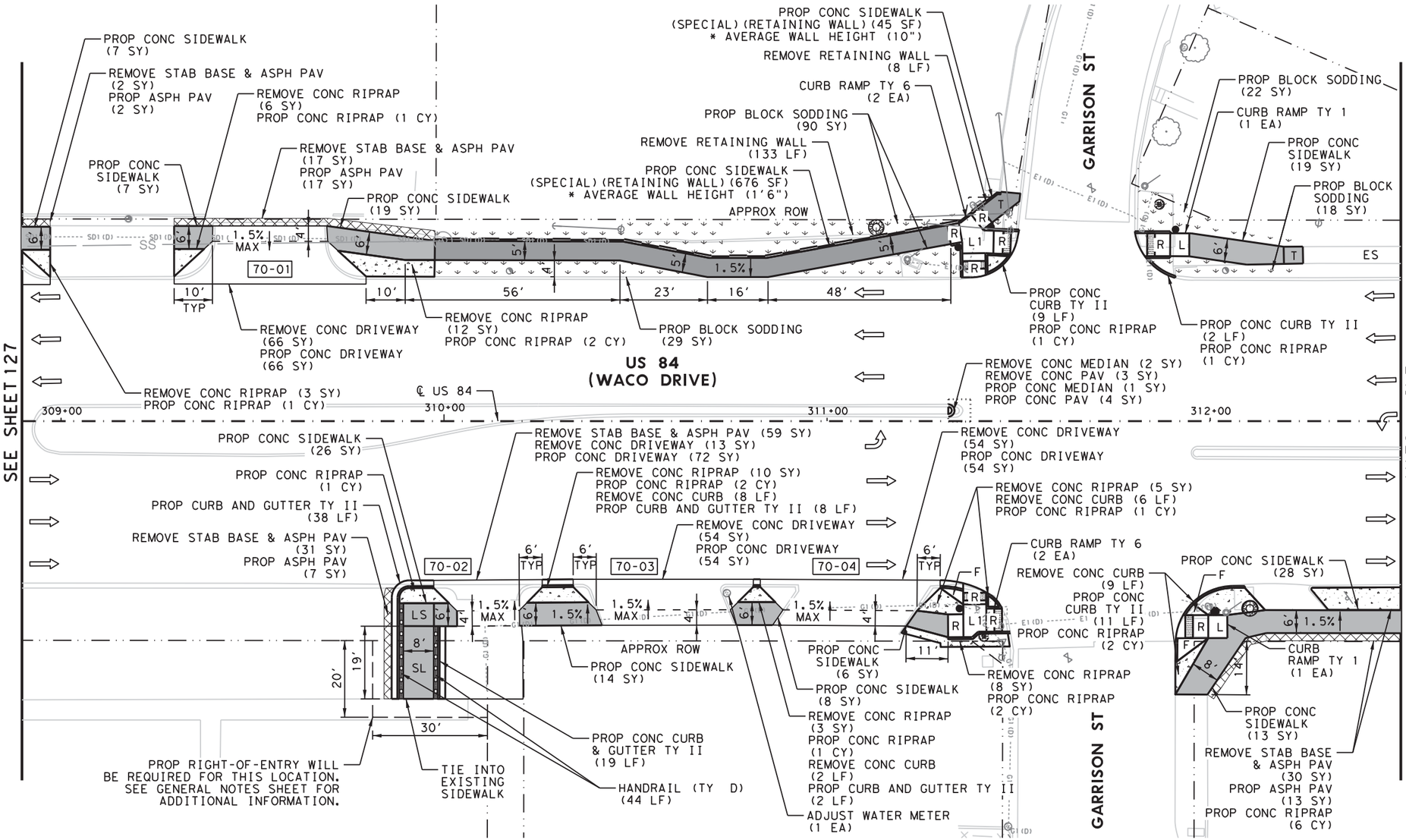

NOTES:

* FOR CONTRACTOR INFORMATION ONLY

1. LINEAR DIMENSIONS ARE TO THE BACK OF CURB.
2. RADII CALLOUTS ARE TO NOMINAL FACE OF CURB UNLESS NOTED OTHERWISE.
3. SIDEWALK CROSS SLOPE IS 1.5% USUAL. MAXIMUM ALLOWABLE CROSS SLOPE ON SIDEWALK IS 2.0%.
4. CONTRACTOR SHALL VERIFY ELEVATIONS AND DIMENSIONS IN THE FIELD PRIOR TO CONSTRUCTION.
5. THE INFORMATION SHOWN IN THESE PLANS CONCERNING TYPE AND LOCATION OF UTILITIES IS NOT GUARANTEED TO BE ACCURATE OR ALL INCLUSIVE. IT SHALL BE THE CONTRACTOR'S RESPONSIBILITY TO VERIFY AND LOCATE ALL EXISTING UTILITIES PRIOR TO CONSTRUCTION. THE CONTRACTOR WILL BE SOLELY RESPONSIBLE FOR ANY DAMAGES BY THEIR CONSTRUCTION OPERATIONS TO EXISTING UTILITIES.
6. REFER TO DRIVEWAY DETAILS, MISCELLANEOUS DETAILS, SIGNAL SHEETS, PAVEMENT MARKING SHEETS, SUMMARY OF SMALL SIGNS, AND TXDOT PED STANDARDS FOR ADDITIONAL INFORMATION.
7. PROPOSED SIGN LOCATIONS MAY BE ADJUSTED AS APPROVED BY THE ENGINEER.

03/01/2021

SPECIAL NOTES & DETAILS

RETAINING WALL DETAIL
NTS

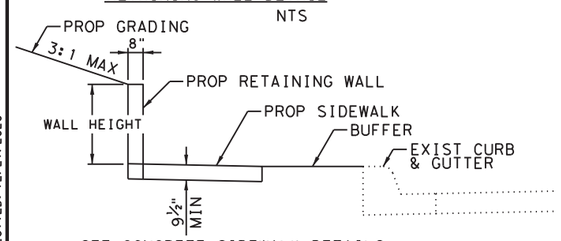

SEE CONCRETE SIDEWALK DETAILS FOR ADDITIONAL WALL AND SIDEWALK INFORMATION.

LEGEND

APPROX ROW	L1	LANDING COMMON	R	RAMP
ELECTRIC BOX/VAULT	LS	LEVEL SIDEWALK (2% MAX)		RIPRAP (CONC)
ES EXIST SIDEWALK	SL	LONGITUDINAL SLOPES MAY NOT EXCEED 5% & CROSS SLOPES MAY NOT EXCEED 2%		SAWCUT LINE
ER EXISTING RAMP				SIDEWALK WALL
FENCE	RAD	RADIUS		SIGN (EXISTING)
FIRE HYDRANT	Ⓢ	MANHOLE	XX-X	SIGN NUMBER
F FLARE		PED SIGNAL POLE (EXIST)		TRAFFIC FLOW
Ⓖ GAS METER	●	PED SIGNAL POLE (PROP)		TRAF SIGNAL POLE (EXIST)
GUY ANCHOR		POWER/ILLUMINATION POLE		TRAF SIGNAL POLE (PROP)
HANDRAIL		PROPOSED ASPHALT PAVING	T	TRANSITION
L LANDING		PROPOSED CONCRETE PAVING		TREE/BUSHES
PROPOSED SMALL SIGN		PROPOSED SIDEWALK	Ⓦ	WATER METER

Kimley»Horn F-928

© 2021

Texas Department of Transportation

SIDEWALK LAYOUT

AT GARRISON ST

SHEET 70 OF 74

FED.RD. DIV.NO.	PROJECT ID.	HIGHWAY NO.
6	(SEE TITLE SHEET)	US 84

STATE	DIST.	COUNTY	SHEET NO.
TEXAS	WAC	MCLENNAN	128
CONT.	SECT.	JOB	
0055	15	072	

FILENAME: pw:\\kh-pw.bentley.com:kh-pw-01\Documents\01 Active Projects\TX-FTW-063586010 - US 84 (Waco Drive)\WAC 0055150724 - Design\Plan Set\3. Roadway\US84_RDW_SP69.dgn
PLOTTED: 12/21/2020

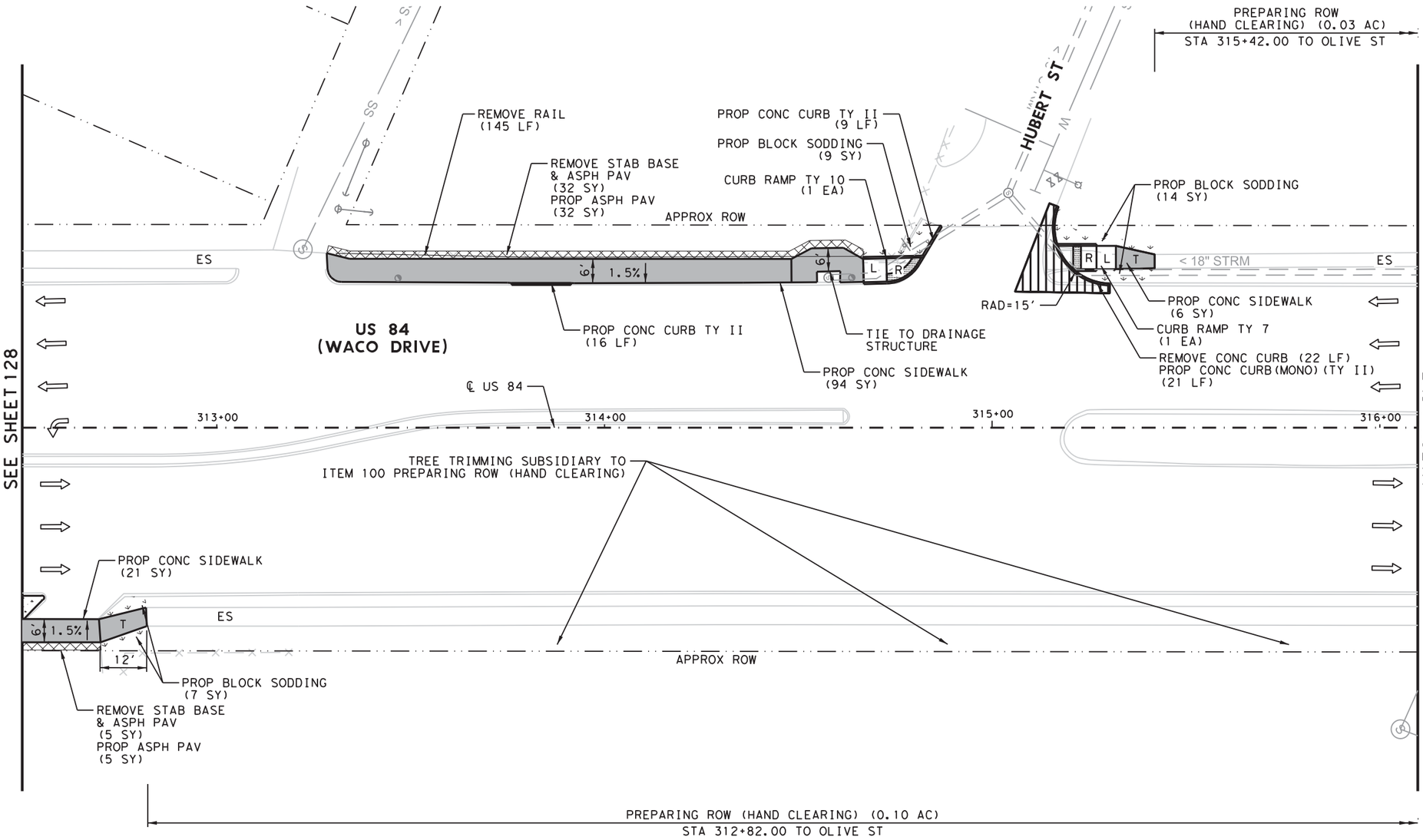

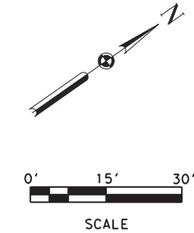

NOTES:

* FOR CONTRACTOR INFORMATION ONLY

1. LINEAR DIMENSIONS ARE TO THE BACK OF CURB.
2. RADII CALLOUTS ARE TO NOMINAL FACE OF CURB UNLESS NOTED OTHERWISE.
3. SIDEWALK CROSS SLOPE IS 1.5% USUAL. MAXIMUM ALLOWABLE CROSS SLOPE ON SIDEWALK IS 2.0%.
4. CONTRACTOR SHALL VERIFY ELEVATIONS AND DIMENSIONS IN THE FIELD PRIOR TO CONSTRUCTION.
5. THE INFORMATION SHOWN IN THESE PLANS CONCERNING TYPE AND LOCATION OF UTILITIES IS NOT GUARANTEED TO BE ACCURATE OR ALL INCLUSIVE. IT SHALL BE THE CONTRACTOR'S RESPONSIBILITY TO VERIFY AND LOCATE ALL EXISTING UTILITIES PRIOR TO CONSTRUCTION. THE CONTRACTOR WILL BE SOLELY RESPONSIBLE FOR ANY DAMAGES BY THEIR CONSTRUCTION OPERATIONS TO EXISTING UTILITIES.
6. REFER TO DRIVEWAY DETAILS, MISCELLANEOUS DETAILS, SIGNAL SHEETS, PAVEMENT MARKING SHEETS, SUMMARY OF SMALL SIGNS, AND TXDOT PED STANDARDS FOR ADDITIONAL INFORMATION.
7. PROPOSED SIGN LOCATIONS MAY BE ADJUSTED AS APPROVED BY THE ENGINEER.

STATE OF TEXAS
SETH T. RUTLEDGE
129231
LICENSED
PROFESSIONAL ENGINEER

03/01/2021

Kimley»Horn F-928

© 2021

Texas Department of Transportation

SPECIAL NOTES & DETAILS

LEGEND

— · ·	APPROX ROW	L1	LANDING COMMON	R	RAMP
	ELECTRIC BOX/VAULT	LS	LEVEL SIDEWALK (2% MAX)		RIPRAP (CONC)
ES	EXIST SIDEWALK	SL	LONGITUDINAL SLOPES MAY NOT EXCEED 5% & CROSS SLOPES MAY NOT EXCEED 2%		SAWCUT LINE
ER	EXISTING RAMP				SIDEWALK WALL
—×—	FENCE	RAD	RADIUS		SIGN (EXISTING)
	FIRE HYDRANT	S	MANHOLE	XX-X	SIGN NUMBER
F	FLARE		PED SIGNAL POLE (EXIST)		TRAFFIC FLOW
G	GAS METER		PED SIGNAL POLE (PROP)		TRAF SIGNAL POLE (EXIST)
	GUY ANCHOR		POWER/ILLUMINATION POLE		TRAF SIGNAL POLE (PROP)
	HANDRAIL		PROPOSED ASPHALT PAVING	T	TRANSITION
L	LANDING		PROPOSED CONCRETE PAVING		TREE/BUSHES
	PROPOSED SMALL SIGN		PROPOSED SIDEWALK	W	WATER METER

SIDEWALK LAYOUT

AT HUBERT ST

SHEET 71 OF 74

FED. RD. DIV. NO.	PROJECT ID.	HIGHWAY NO.
6	(SEE TITLE SHEET)	US 84

STATE	DIST.	COUNTY	SHEET NO.
TEXAS	WAC	MCLENNAN	129
CONT.	SECT.	JOB	
0055	15	072	

FILENAME: pw:\\kh-pw.bentley.com:kh-pw-01\Documents\01 Active Projects\TX-FTW-063586010 - US 84 (Waco Drive)\WAC 005515072\4 - Design\Plan Set\3. Roadway\US84_RDW_SP70.dgn
PLOTTED: 12/21/2020

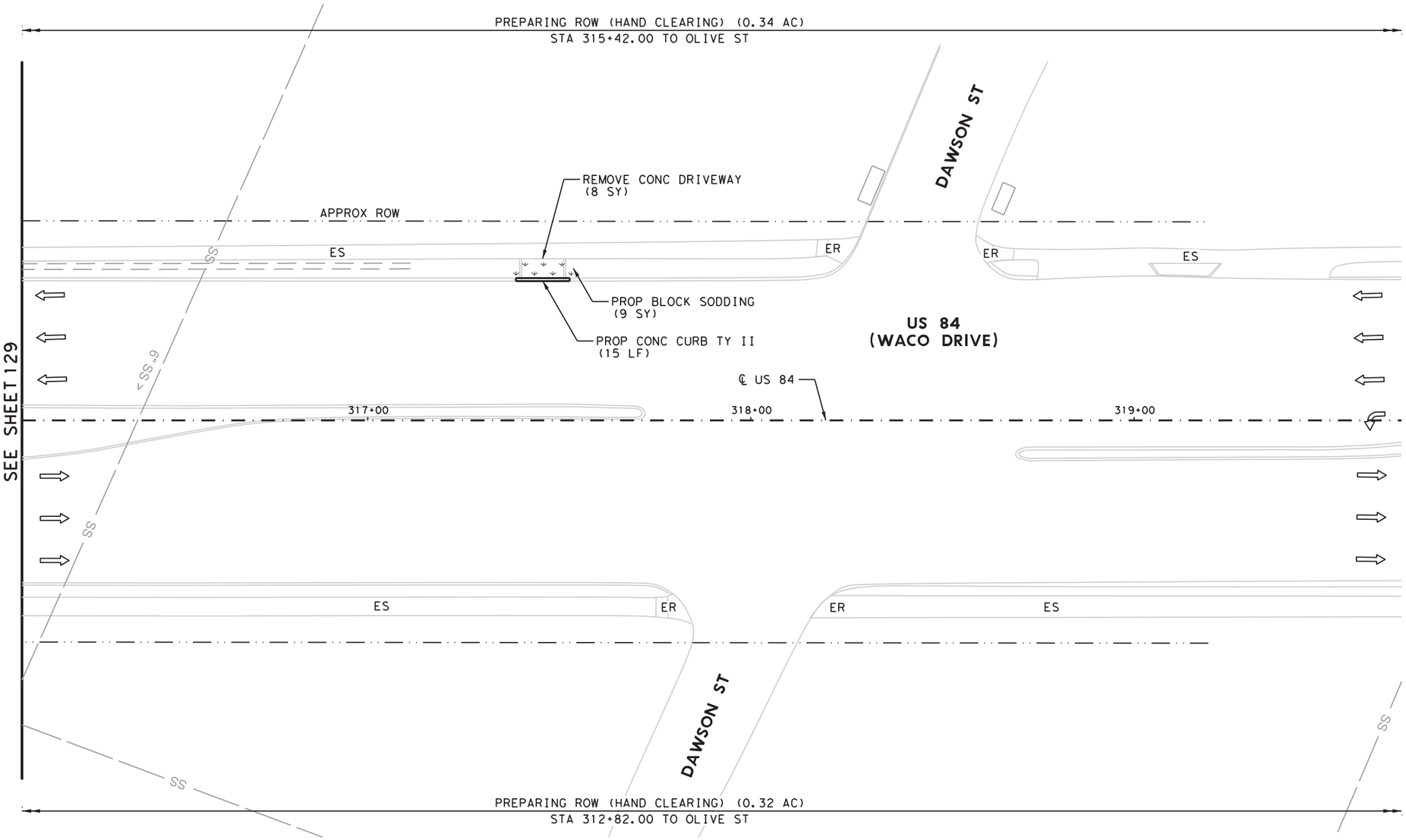

0′ 15′ 30′

SCALE

NOTES:

* FOR CONTRACTOR INFORMATION ONLY

1. LINEAR DIMENSIONS ARE TO THE BACK OF CURB.
2. RADII CALLOUTS ARE TO NOMINAL FACE OF CURB UNLESS NOTED OTHERWISE.
3. SIDEWALK CROSS SLOPE IS 1.5% USUAL. MAXIMUM ALLOWABLE CROSS SLOPE ON SIDEWALK IS 2.0%.
4. CONTRACTOR SHALL VERIFY ELEVATIONS AND DIMENSIONS IN THE FIELD PRIOR TO CONSTRUCTION.
5. THE INFORMATION SHOWN IN THESE PLANS CONCERNING TYPE AND LOCATION OF UTILITIES IS NOT GUARANTEED TO BE ACCURATE OR ALL INCLUSIVE. IT SHALL BE THE CONTRACTOR'S RESPONSIBILITY TO VERIFY AND LOCATE ALL EXISTING UTILITIES PRIOR TO CONSTRUCTION. THE CONTRACTOR WILL BE SOLELY RESPONSIBLE FOR ANY DAMAGES BY THEIR CONSTRUCTION OPERATIONS TO EXISTING UTILITIES.
6. REFER TO DRIVEWAY DETAILS, MISCELLANEOUS DETAILS, SIGNAL SHEETS, PAVEMENT MARKING SHEETS, SUMMARY OF SMALL SIGNS, AND TXDOT PED STANDARDS FOR ADDITIONAL INFORMATION.
7. PROPOSED SIGN LOCATIONS MAY BE ADJUSTED AS APPROVED BY THE ENGINEER.

STATE OF TEXAS — JAMES RUTH — 5825 — LICENSED PROFESSIONAL ENGINEER

03/01/2021

Kimley»Horn F-928

© 2021

Texas Department of Transportation

SPECIAL NOTES & DETAILS

LEGEND

APPROX ROW	L1	LANDING COMMON	R	RAMP
ELECTRIC BOX/VAULT	LS	LEVEL SIDEWALK (2% MAX)		RIPRAP (CONC)
ES EXIST SIDEWALK	SL	LONGITUDINAL SLOPES MAY NOT EXCEED 5% & CROSS SLOPES MAY NOT EXCEED 2%		SAWCUT LINE
ER EXISTING RAMP				SIDEWALK WALL
FENCE	RAD	RADIUS		SIGN (EXISTING)
FIRE HYDRANT	Ⓢ	MANHOLE	XX-X	SIGN NUMBER
F FLARE		PED SIGNAL POLE (EXIST)		TRAFFIC FLOW
Ⓖ GAS METER	●	PED SIGNAL POLE (PROP)		TRAF SIGNAL POLE (EXIST)
GUY ANCHOR		POWER/ILLUMINATION POLE		TRAF SIGNAL POLE (PROP)
HANDRAIL		PROPOSED ASPHALT PAVING	T	TRANSITION
L LANDING		PROPOSED CONCRETE PAVING		TREE/BUSHES
PROPOSED SMALL SIGN		PROPOSED SIDEWALK	Ⓦ	WATER METER

SIDEWALK LAYOUT

AT DAWSON ST

SHEET 72 OF 74

FED.RD. DIV.NO.	PROJECT ID.	HIGHWAY NO.
6	(SEE TITLE SHEET)	US 84

STATE	DIST.	COUNTY	SHEET NO.
TEXAS	WAC	MCLENNAN	130
CONT.	SECT.	JOB	
0055	15	072	

FILENAME: pw:\\kh-pw.bentley.com:kh-pw-01\Documents\01 Active Projects\TX-FTW-063586010 - US 84 (Waco Drive)\WAC 0055150721\4 - Design\Plan Set\3. Roadway\US84_RDW_SP70A.dgn
PLOTTED: 12/21/2020

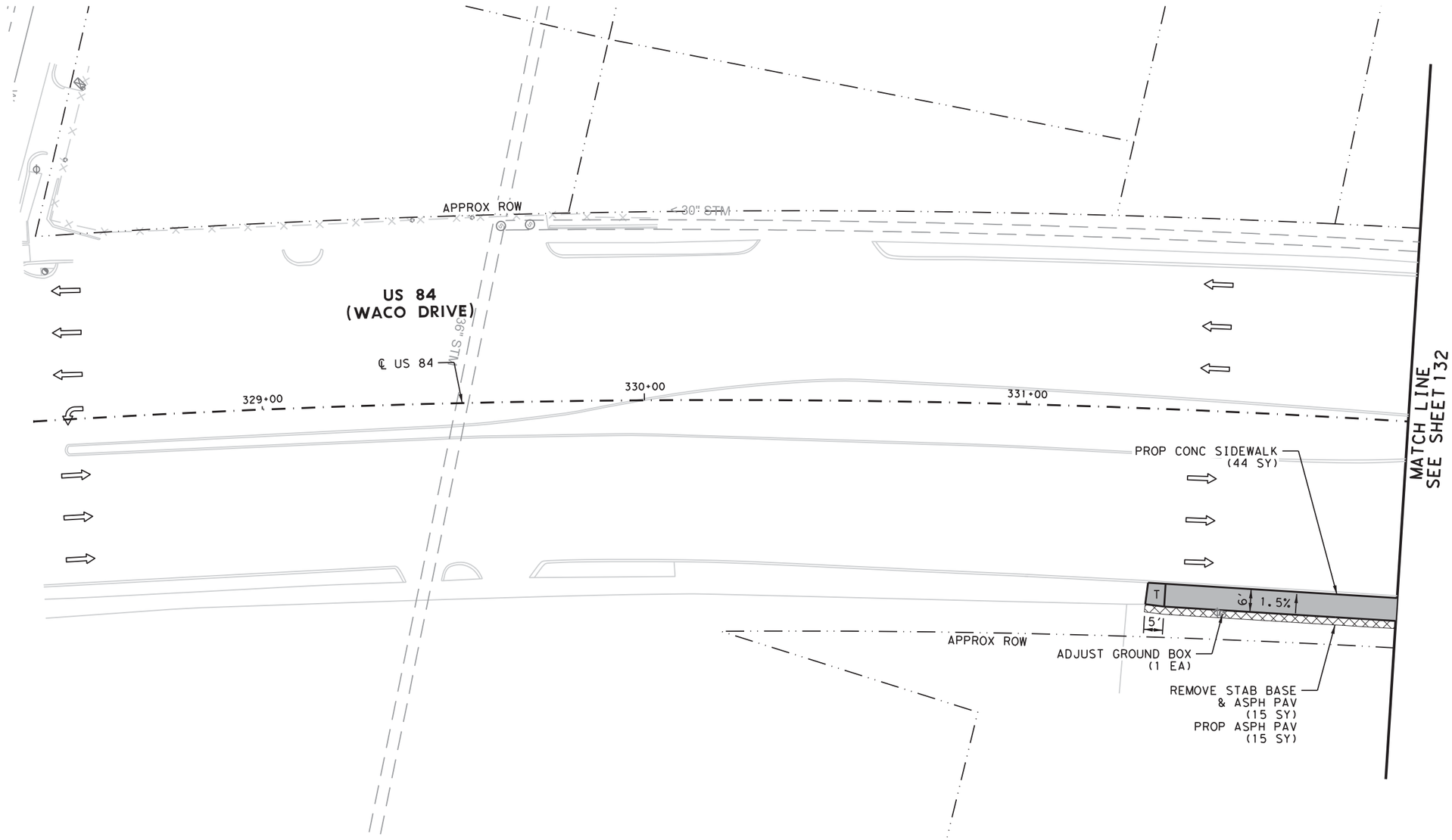

N

0' 15' 30'

SCALE

NOTES:

* FOR CONTRACTOR INFORMATION ONLY

1. LINEAR DIMENSIONS ARE TO THE BACK OF CURB.
2. RADII CALLOUTS ARE TO NOMINAL FACE OF CURB UNLESS NOTED OTHERWISE.
3. SIDEWALK CROSS SLOPE IS 1.5% USUAL. MAXIMUM ALLOWABLE CROSS SLOPE ON SIDEWALK IS 2.0%.
4. CONTRACTOR SHALL VERIFY ELEVATIONS AND DIMENSIONS IN THE FIELD PRIOR TO CONSTRUCTION.
5. THE INFORMATION SHOWN IN THESE PLANS CONCERNING TYPE AND LOCATION OF UTILITIES IS NOT GUARANTEED TO BE ACCURATE OR ALL INCLUSIVE. IT SHALL BE THE CONTRACTOR'S RESPONSIBILITY TO VERIFY AND LOCATE ALL EXISTING UTILITIES PRIOR TO CONSTRUCTION. THE CONTRACTOR WILL BE SOLELY RESPONSIBLE FOR ANY DAMAGES BY THEIR CONSTRUCTION OPERATIONS TO EXISTING UTILITIES.
6. REFER TO DRIVEWAY DETAILS, MISCELLANEOUS DETAILS, SIGNAL SHEETS, PAVEMENT MARKING SHEETS, SUMMARY OF SMALL SIGNS, AND TXDOT PED STANDARDS FOR ADDITIONAL INFORMATION.
7. PROPOSED SIGN LOCATIONS MAY BE ADJUSTED AS APPROVED BY THE ENGINEER.

STATE OF TEXAS · KEITH RUTHERFORD · 126901 · LICENSED · PROFESSIONAL ENGINEER

03/01/2021

Kimley»Horn F-928

© 2021

Texas Department of Transportation

SPECIAL NOTES & DETAILS

LEGEND

APPROX ROW	L1	LANDING COMMON	R	RAMP
ELECTRIC BOX/VAULT	LS	LEVEL SIDEWALK (2% MAX)		RIPRAP (CONC)
ES EXIST SIDEWALK	SL	LONGITUDINAL SLOPES MAY NOT EXCEED 5% & CROSS SLOPES MAY NOT EXCEED 2%		SAWCUT LINE
ER EXISTING RAMP				SIDEWALK WALL
FENCE	RAD	RADIUS		SIGN (EXISTING)
FIRE HYDRANT	Ⓢ	MANHOLE	XX-X	SIGN NUMBER
F FLARE		PED SIGNAL POLE (EXIST)		TRAFFIC FLOW
Ⓖ GAS METER	●	PED SIGNAL POLE (PROP)		TRAF SIGNAL POLE (EXIST)
GUY ANCHOR		POWER/ILLUMINATION POLE		TRAF SIGNAL POLE (PROP)
HANDRAIL		PROPOSED ASPHALT PAVING	T	TRANSITION
L LANDING		PROPOSED CONCRETE PAVING		TREE/BUSHES
PROPOSED SMALL SIGN		PROPOSED SIDEWALK	Ⓦ	WATER METER

SIDEWALK LAYOUT

BETWEEN OLIVE ST
AND FM 933 (CLIFTON ST)

SHEET 73 OF 74

FED.RD. DIV.NO.	PROJECT ID.	HIGHWAY NO.
6	(SEE TITLE SHEET)	US 84

STATE	DIST.	COUNTY	SHEET NO.
TEXAS	WAC	MCLENNAN	131
CONT.	SECT.	JOB	
0055	15	072	

FILENAME: pw:\\kh-pw.bentley.com:kh-pw-01\Documents\01 Active Projects\TX-FTW-063586010 - US 84 (Waco Drive)\WAC 0055150721\4 - Design\Plan Set\3. Roadway\US84_RDW_SP71.dgn
PLOTTED: 12/21/2020

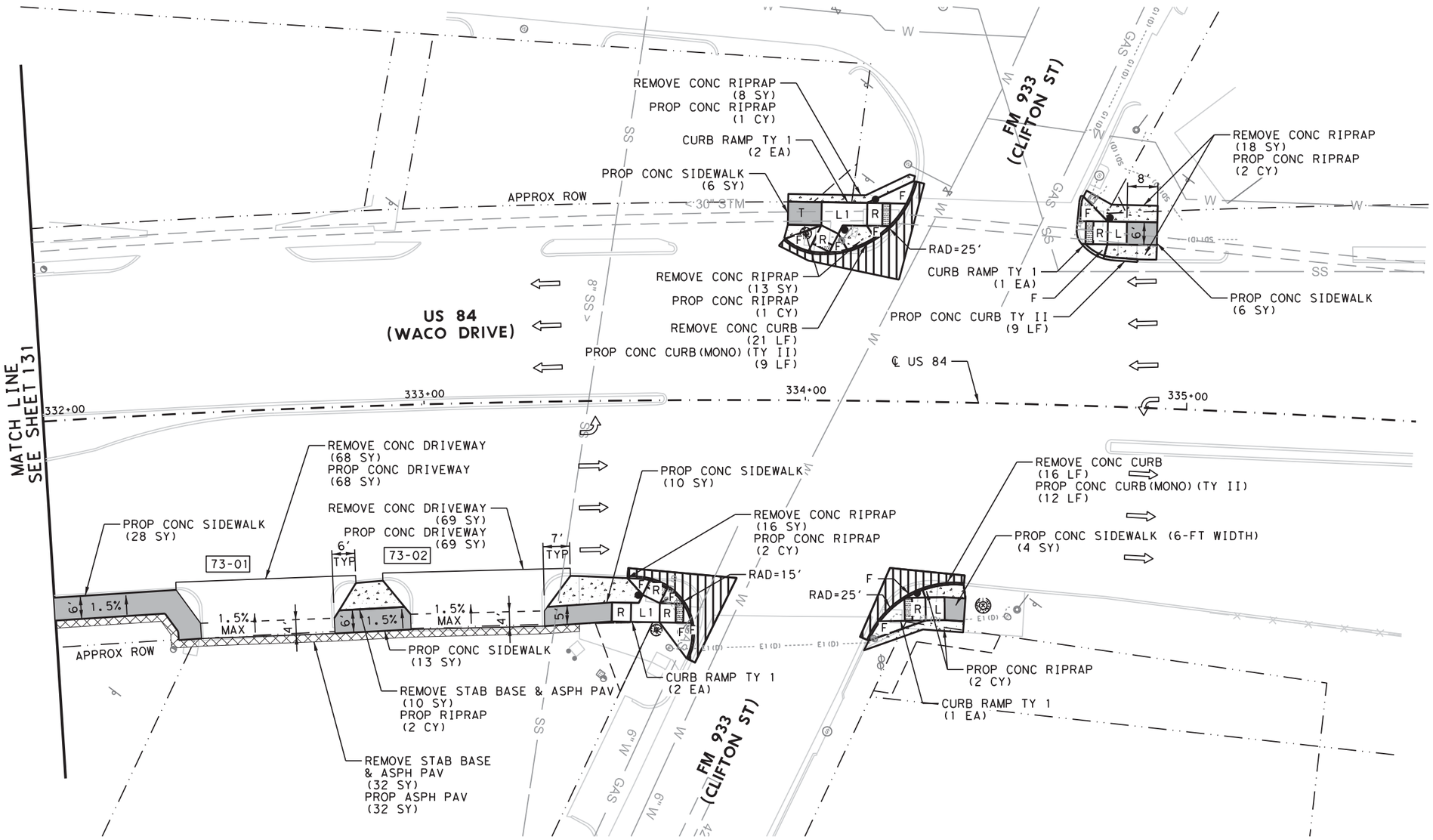

0' 15' 30'

SCALE

NOTES:

* FOR CONTRACTOR INFORMATION ONLY

1. LINEAR DIMENSIONS ARE TO THE BACK OF CURB.
2. RADII CALLOUTS ARE TO NOMINAL FACE OF CURB UNLESS NOTED OTHERWISE.
3. SIDEWALK CROSS SLOPE IS 1.5% USUAL. MAXIMUM ALLOWABLE CROSS SLOPE ON SIDEWALK IS 2.0%.
4. CONTRACTOR SHALL VERIFY ELEVATIONS AND DIMENSIONS IN THE FIELD PRIOR TO CONSTRUCTION.
5. THE INFORMATION SHOWN IN THESE PLANS CONCERNING TYPE AND LOCATION OF UTILITIES IS NOT GUARANTEED TO BE ACCURATE OR ALL INCLUSIVE. IT SHALL BE THE CONTRACTOR'S RESPONSIBILITY TO VERIFY AND LOCATE ALL EXISTING UTILITIES PRIOR TO CONSTRUCTION. THE CONTRACTOR WILL BE SOLELY RESPONSIBLE FOR ANY DAMAGES BY THEIR CONSTRUCTION OPERATIONS TO EXISTING UTILITIES.
6. REFER TO DRIVEWAY DETAILS, MISCELLANEOUS DETAILS, SIGNAL SHEETS, PAVEMENT MARKING SHEETS, SUMMARY OF SMALL SIGNS, AND TXDOT PED STANDARDS FOR ADDITIONAL INFORMATION.
7. PROPOSED SIGN LOCATIONS MAY BE ADJUSTED AS APPROVED BY THE ENGINEER.

STATE OF TEXAS
JAMES R. RUTH
129231
LICENSED PROFESSIONAL ENGINEER

03/01/2021

Kimley»Horn F-928

© 2021

Texas Department of Transportation

SPECIAL NOTES & DETAILS

LEGEND

APPROX ROW	L1	LANDING COMMON	R	RAMP	
ELECTRIC BOX/VAULT	LS	LEVEL SIDEWALK (2% MAX)	RIPRAP (CONC)		
ES	EXIST SIDEWALK	SL	LONGITUDINAL SLOPES MAY NOT EXCEED 5% & CROSS SLOPES MAY NOT EXCEED 2%	SAWCUT LINE	
ER	EXISTING RAMP			SIDEWALK WALL	
FENCE	RAD	RADIUS	SIGN (EXISTING)		
FIRE HYDRANT	MANHOLE	XX-X	SIGN NUMBER		
F	FLARE	PED SIGNAL POLE (EXIST)	TRAFFIC FLOW		
GAS METER	PED SIGNAL POLE (PROP)	TRAF SIGNAL POLE (EXIST)			
GUY ANCHOR	POWER/ILLUMINATION POLE	TRAF SIGNAL POLE (PROP)			
HANDRAIL	PROPOSED ASPHALT PAVING	T	TRANSITION		
L	LANDING	PROPOSED CONCRETE PAVING	TREE/BUSHES		
PROPOSED SMALL SIGN	PROPOSED SIDEWALK	WATER METER			

SIDEWALK LAYOUT

AT FM 933 (CLIFTON ST)

SHEET 74 OF 74

FED.RD. DIV.NO.	PROJECT ID.	HIGHWAY NO.
6	(SEE TITLE SHEET)	US 84

STATE	DIST.	COUNTY	SHEET NO.
TEXAS	WAC	MCLENNAN	132
CONT.	SECT.	JOB	
0055	15	072	

FILENAME: pw:\\kh-pw.bentley.com:kh-pw-01\Documents\01 Active Projects\TX-FTW-063586010 - US 84 (Waco Drive)\WAC 0055150724 - Design\Plan Set\3. Roadway\US84_RDW_SP72.dgn
PLOTTED: 12/21/2020

CURB RAMP LAYOUT DATA					
INTERSECTION	QUADRANT	CROSSING STREET	STATION	OFFSET	RAMP WIDTH
CENTERPOINT	WEST	CENTERPOINT	397+92.83	75.40 LT	6.00′
	NORTH	CENTERPOINT	398+80.47	70.96 LT	6.00′
		US 84	398+90.98	63.84 LT	6.00′
		WB US 84	398+89.15	6.69 LT	6.00′
		EB US 84	398+88.65	14.16 RT	6.00′
	EAST	US 84	398+87.14	55.98 RT	6.00′
LAKE AIR DR	WEST	LAKE AIR DR	46+00.33	71.67 LT	6.00′
		SB LAKE AIR DR	46+17.44	71.67 LT	6.00′
		NB LAKE AIR DR	46+39.76	71.67 LT	6.00′
	NORTH	LAKE AIR DR/US 84	46+94.83	67.18 LT	9.00′
		WB US 84	47+53.70	1.79 RT	6.00′
		EB US 84	47+60.34	11.73 RT	6.00′
	EAST	US 84/LAKE AIR DR	47+90.79	67.80 RT	5.00′
		LAKE AIR DR RTL	47+62.39	70.66 RT	6.00′
		SB LAKE AIR DR	47+40.13	70.66 RT	6.00′
	SOUTH	LAKE AIR DR	46+89.02	70.66 RT	6.00′
FACTORY DR	SOUTH	FACTORY DR	51+12.18	72.72 RT	6.00′
NORTH INDUSTRIAL DR	NORTH	N. INDUSTRIAL DR	55+09.92	70.06 LT	5.00′
	WEST	N. INDUSTRIAL DR	54+75.31	69.23 LT	5.00′
INDUSTRIAL DR	EAST	US 84	59+98.79	53.05 RT	5.00′
		INDUSTRIAL DR	59+91.96	64.54 RT	5.00′
	SOUTH	INDUSTRIAL DR	59+46.91	69.06 RT	5.00′
TOWN OAKS DR	NORTH	US 84	60+00.97	63.54 LT	6.00′
		TOWN OAKS DR	59+87.61	81.57 LT	6.00′
	WEST	TOWN OAKS DR	59+48.46	80.35 LT	5.00′
VILLA DR	WEST	VILLA DR	67+40.42	72.33 RT	6.00′
	SOUTH	VILLA DR	67+01.86	72.33 RT	6.00′
SUN VALLEY DR	WEST	US 84	70+41.95	51.67 LT	6.00′
		WB US 84	70+41.12	10.34 LT	6.00′
		EB US 84	70+41.24	4.81 RT	6.00′
	SOUTH	US 84	70+41.99	56.54 RT	6.00′
		SUN VALLEY DR	70+63.25	70.81 RT	6.00′
	EAST	SUN VALLEY DR	71+17.39	70.81 RT	6.00′
ESTHER ST	NORTH	ESTHER ST	77+53.39	69.50 LT	6.00′
	WEST	ESTHER ST	77+09.51	69.93 LT	6.00′
N. NEW RD	NORTH	N. NEW RD	81+43.29	77.69 LT	5.00′
	SOUTH	US 84	81+34.43	54.34 RT	5.00′
VALLEY MILLS DR	NORTH	US 84 WB	90+34.46	81.18 LT	6.00′
		US 84 WB	90+26.19	65.56 LT	6.00′
		US 84	90+28.15	44.63 LT	6.00′
	WEST	VALLEY MILLS DR	88+09.91	94.20 LT	6.00′
		VALLEY MILLS DR	88+41.84	74.00 LT	6.00′
		US 84	88+74.13	47.62 LT	6.00′
	SOUTH	VALLEY MILLS DR	89+24.89	75.72 RT	6.00′
		US 84	89+30.68	35.99 RT	6.00′
		VALLEY MILLS DR	89+50.54	45.82 RT	6.00′
		US 84 EB	89+36.67	53.41 RT	6.00′
	EAST	VALLEY MILLS DR	91+72.04	46.24 RT	6.00′
		US 84 EB	91+04.23	46.11 RT	6.00′
		VALLEY MILLS DR	90+72.00	46.05 RT	6.00′
		US 84 EB	90+79.51	37.59 RT	6.00′
N. 43RD ST	NORTH	N. 43RD ST	92+61.21	56.28 LT	5.00′
	WEST	N. 43RD ST	92+26.18	57.45 LT	5.00′
AUSTIN AVE	SOUTH	AUSTIN AVE	95+84.10	44.15 RT	6.00′
N. 42ND ST	WEST	N. 42ND ST	95+81.76	42.56 LT	5.00′
N. 41ST ST	SOUTH	N. 41ST ST	98+79.53	37.42 RT	6.00′
N. 40TH ST	EAST	N. 40TH ST	102+38.92	36.68 RT	6.00′
N. 39TH ST	SOUTH	N. 39TH ST	105+01.78	37.41 RT	6.00′
	EAST	N. 39TH ST	105+43.72	36.84 RT	6.00′
	NORTH	N. 39TH ST	106+56.45	35.58 LT	6.00′

HORIZONTAL RAMP GEOMETRY

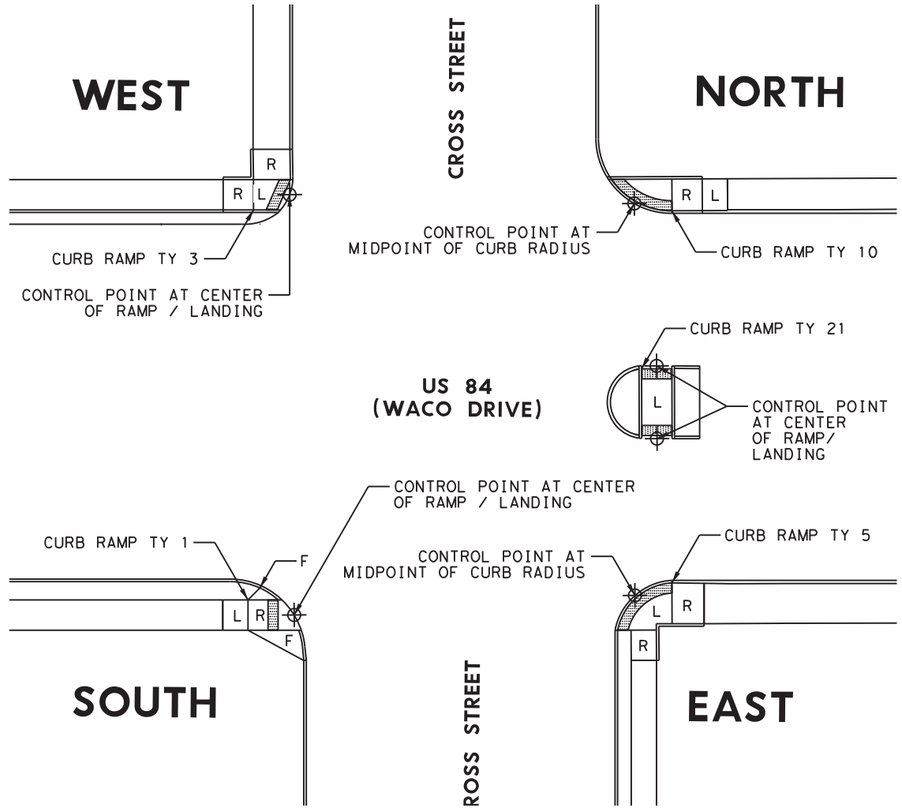

NOTES:

1. CONTROL POINTS FOR RAMPS ARE SHOWN TO THE NOMINAL FACE OF CURB.
2. ALL STATIONS AND OFFSETS ARE BASED ON ℄ US 84.
3. LOCATION OF CURB RAMPS MAY BE ADJUSTED TO FIT FIELD CONDITIONS AS APPROVED AND DIRECTED BY THE ENGINEER.

03/01/2021

Kimley»Horn F-928

© 2021

Texas Department of Transportation

CURB RAMP DATA

SCALE: NTS SHEET 1 OF 3

FED.RD. DIV.NO.	PROJECT ID.	HIGHWAY NO.
6	(SEE TITLE SHEET)	US 84

STATE	DIST.	COUNTY	SHEET NO.
TEXAS	WAC	MCLENNAN	133
CONT.	SECT.	JOB	
0055	15	072	

FILENAME: pw:\\kh-pw.bentley.com:kh-pw-01\Documents\01 Active Projects\TX-FTW-063586010 - US 84 (Waco Drive)\WAC 005515072\4 - Design\Plan Set\3. Roadway\US84_DET_CRD01.dgn
PLOTTED: 12/21/2020

CURB RAMP LAYOUT DATA					
INTERSECTION	QUADRANT	CROSSING STREET	STATION	OFFSET	RAMP WIDTH
N. 38TH ST	NORTH	N. 38TH ST	111+00.91	39.24 LT	6.00′
		US 84	111+12.35	33.91 LT	6.00′
	WEST	N. 38TH ST	110+46.78	36.37 LT	6.00′
	EAST	N. 38TH ST	110+82.42	35.79 RT	6.00′
		US 84	110+97.46	33.92 RT	6.00′
	SOUTH	N. 38TH ST	110+35.36	38.58 RT	6.00′
N. 37TH ST	NORTH	N. 37TH ST	115+54.76	38.19 LT	6.00′
	WEST	N. 37TH ST	115+15.41	39.14 LT	6.00′
N. 36TH ST	NORTH	N. 36TH ST	120+93.49	46.63 LT	6.00′
	WEST	N. 36TH ST	120+43.66	45.73 LT	6.00′
		US 84	120+29.47	33.81 LT	6.00′
N. 35TH ST	NORTH	N. 35TH ST	124+76.04	35.76 LT	6.00′
	WEST	N. 35TH ST	124+40.38	40.24 LT	6.00′
N. 34TH ST	NORTH	N. 34TH ST	128+32.44	39.86 LT	6.00′
	WEST	N. 34TH ST	128+03.46	38.90 LT	6.00′
N. 34RD ST	NORTH	N. 33RD ST	132+01.22	39.56 LT	6.00′
	WEST	N. 33RD ST	131+69.62	39.90 LT	6.00′
ORIENTAL RD	EAST	ORIENTAL RD	134+39.95	36.89 RT	6.00′
	SOUTH	ORIENTAL RD	133+93.03	36.75 RT	6.00′
N. 32nd St	NORTH	N. 32ND ST	135+71.87	39.29 LT	6.00′
	WEST	N. 32ND ST	135+38.47	39.49 LT	6.00′
CRESCENT RD	EAST	CRESCENT RD	138+36.39	36.83 RT	6.00′
N. 32ND ST	NORTH	N. 31ST ST	139+33.45	37.73 LT	6.00′
	WEST	N. 31ST ST	139+04.02	40.93 LT	6.00′
N. 30TH ST	EAST	N. 30TH ST	144+42.74	38.52 RT	5.00′
	SOUTH	N. 30TH ST	143+93.93	39.68 RT	6.00′
N. 29TH ST	NORTH	N. 29TH ST/US 84	148+51.03	43.04 LT	6.00′
	WEST	N. 29TH ST/US 84	148+00.59	37.51 LT	6.00′
	SOUTH	US 84	147+91.53	32.49 RT	5.50′
		N. 29TH ST	148+03.52	38.96 RT	5.00′
	EAST	N. 29TH ST/US 84	148+46.97	35.07 RT	6.00′
N. 27TH ST	NORTH	N. 27TH ST	156+76.73	41.53 LT	6.00′
	SOUTH	N. 27TH ST	156+34.80	39.42 RT	6.00′
	EAST	N. 27TH ST	156+78.88	39.72 RT	5.00′ MIN
	WEST	N. 27TH ST	156+34.24	40.25 LT	6.00′
N. 26TH ST	NORTH	N. 26TH ST	160+87.95	40.83 LT	6.00′
	WEST	N. 26TH ST	160+50.55	41.94 LT	6.00′
		US 84	160+42.71	34.72 LT	6.00′
	SOUTH	US 84	160+43.53	33.97 RT	6.00′
		N. 26TH ST	160+54.64	42.36 RT	5.00′
	EAST	N. 26TH ST	160+92.52	41.15 RT	6.00′
N. 25TH ST	NORTH	N. 25TH ST	165+09.20	50.44 LT	5.00′
		US 84	165+25.46	41.92 LT	6.00′
		WB US 84	165+25.83	6.66 LT	6.00′
		EB US 84	165+25.97	6.56 RT	6.00′
	EAST	US 84	165+25.86	33.67 RT	6.00′
		N. 25TH ST	165+07.55	42.48 RT	5.00′
	SOUTH	N. 25TH ST	164+66.34	41.71 RT	5.00′
		US 84	164+58.31	34.35 RT	5.00′
	WEST	US 84	164+57.30	33.81 LT	6.00′
		N. 25TH ST	164+67.31	44.04 LT	6.00′
N. 24TH ST	NORTH	N. 24TH ST	169+73.99	32.07 LT	6.00′
	WEST	N. 24TH ST	169+39.80	36.36 LT	5.00′
	SOUTH	N. 24TH ST	168+77.59	41.81 RT	6.00′
N. 23RD ST	NORTH	N. 23RD ST	173+33.34	40.64 LT	6.00′
	EAST	N. 23RD ST	173+24.37	40.83 RT	6.00′
	SOUTH	N. 23RD ST	172+82.25	40.12 RT	6.00′
N. 21ST ST	EAST	N. 21ST ST	181+72.08	40.22 RT	6.00′
	WEST	N. 21ST ST	181+92.32	40.04 LT	6.00′
BARNARD AVE	NORTH	BARNARD AVE	184+40.07	65.83 RT	5.00′
	SOUTH	BARNARD AVE	184+49.86	48.39 RT	5.00′

CURB RAMP LAYOUT DATA					
INTERSECTION	QUADRANT	CROSSING STREET	STATION	OFFSET	RAMP WIDTH
N. 20TH ST	WEST	N. 20TH ST	186+26.37	78.19 LT	5.00′
N. 19TH ST	NORTH	N. 19TH ST	190+53.92	41.70 LT	6.00′
N. 18TH ST	NORTH	N. 18TH ST	195+41.62	44.44 LT	6.00′
		NB N. 18TH ST	195+17.45	44.90 LT	6.00′
		SB N. 18TH ST	194+97.67	43.91 LT	6.00′
	WEST	N. 18TH ST	194+48.53	43.31 LT	6.00′
		US 84	194+31.46	34.14 LT	6.00′
	SOUTH	US 84	194+18.13	33.58 RT	6.00′
		N. 18TH ST	194+29.59	45.74 RT	6.00′
	EAST	N. 18TH ST	194+96.08	42.19 RT	6.00′
N. 17TH ST	NORTH	N. 17TH ST	199+74.69	47.35 LT	5.00′
	WEST	N. 17TH ST	199+39.40	42.11 LT	5.00′
		US 84	199+20.27	33.91 LT	5.00′
	SOUTH	US 84	199+20.66	33.69 RT	5.00′
		N. 17TH ST	199+33.68	43.69 RT	5.00′
	EAST	N. 17TH ST	199+95.40	43.35 RT	5.00′
N. 16TH ST	WEST	N. 16TH ST	202+58.03	40.71 LT	5.00′
	SOUTH	N. 16TH ST	202+57.14	42.95 RT	5.00′
	EAST	N. 16TH ST	203+01.12	38.76 RT	5.00′ MIN
N. 15TH ST	NORTH	N. 15TH ST	207+24.13	36.81 LT	5.00′
	WEST	N. 15TH ST	206+71.33	42.12 LT	6.00′
	SOUTH	N. 15TH ST	206+72.35	41.17 RT	5.00′
	EAST	N. 15TH ST	207+16.82	43.30 RT	5.00′
		US 84	207+24.76	35.09 RT	5.00′
N. 13TH ST	NORTH	N. 13TH ST	217+98.20	40.29 LT	6.00′
	SOUTH	N. 13TH ST	216+91.53	42.01 RT	6.00′
	EAST	N. 13TH ST	217+48.15	41.21 RT	6.00′
	WEST	N. 13TH ST	217+53.17	39.98 LT	6.00′
N. 12TH ST	NORTH	N. 12TH ST	221+82.04	71.14 LT	6.00′
		US 84	221+90.86	61.31 LT	6.00′
	EAST	N. 12TH ST	221+54.95	41.12 RT	6.00′
		US 84	221+71.45	33.38 RT	5.00′
	SOUTH	N. 12TH ST	221+08.74	40.75 RT	6.00′
	WEST	N. 12TH ST	221+46.31	81.58 LT	6.00′
N. 11TH ST	NORTH	N. 11TH ST/US 84	225+50.40	43.86 LT	6.00′
	WEST	N. 11TH ST	225+03.01	41.16LT	5.00′
	SOUTH	N. 11TH ST	224+88.71	42.52 RT	6.00′
	EAST	N. 11TH ST	225+35.84	42.7 RT	5.00′
		US 84	225+49.55	34.37 RT	5.00′
N. 10TH ST	NORTH	N. 10TH ST	229+19.62	40.53 LT	6.00′
	SOUTH	N. 10TH ST	228+85.28	41.39 RT	6.00′
	EAST	N. 10TH ST	229+28.70	40.46 RT	6.00′
	WEST	N. 10TH ST	228+80.47	40.89 LT	6.00′
N. 9TH ST	NORTH	N. 9TH ST	233+23.88	51.27 LT	6.00′
		US 84	233+38.56	39.83 LT	6.00′
	SOUTH	N. 9TH ST	232+87.97	38.99 RT	5.00′
	EAST	N. 9TH ST/US 84	233+40.30	36.64 RT	5.00′ MIN
	WEST	N. 9TH ST	232+72.14	42.54 LT	6.00′
N. 8TH ST	EAST	N. 8TH ST	237+49.46	48.12 RT	6.00′
N. 6TH ST	WEST	N. 6TH ST	245+17.71	49.66 LT	6.00′
	SOUTH	N. 6TH ST	244+83.38	51.06 RT	6.00′
N. 5TH ST	NORTH	N. 5TH ST	249+62.14	50.86 LT	6.00′
		US 84	249+75.24	41.12 LT	6.00′
	SOUTH	N. 5TH ST/US 84	248+94.78	44.80 RT	6.00′
	EAST	N. 5TH ST	249+45.90	49.10 RT	6.00′
		US 84	259+62.05	39.36 RT	6.00′
	WEST	N. 5TH ST	249+16.50	50.06 LT	6.00′
		US 84	249+03.72	39.85 LT	6.00′

NOTES:

1. CONTROL POINTS FOR RAMPS ARE SHOWN TO THE NOMINAL FACE OF CURB.
2. ALL STATIONS AND OFFSETS ARE BASED ON ℄ US 84.
3. LOCATION OF CURB RAMPS MAY BE ADJUSTED TO FIT FIELD CONDITIONS AS APPROVED AND DIRECTED BY THE ENGINEER.

12/21/2020

Kimley»Horn F-928

© 2021

Texas Department of Transportation

CURB RAMP DATA

SCALE: NTS SHEET 2 OF 3

FED.RD. DIV.NO.	PROJECT ID.	HIGHWAY NO.
6	(SEE TITLE SHEET)	US 84

STATE	DIST.	COUNTY	SHEET NO.
TEXAS	WAC	MCLENNAN	134
CONT.	SECT.	JOB	
0055	15	072	

FILENAME: pw:\\kh-pw.bentley.com:kh-pw-01\Documents\01 Active Projects\TX-FTW-063586010 - US 84 (Waco Drive)\WAC 0055150721\4 - Design\Plan Set\3. Roadway\US84_DET_CRD02.dgn
PLOTTED: 12/21/2020

CURB RAMP LAYOUT DATA					
INTERSECTION	QUADRANT	CROSSING STREET	STATION	OFFSET	RAMP WIDTH
N. 4TH ST	NORTH	N. 4TH ST/US 84	253+80.59	45.54 LT	6.00′
	SOUTH	N. 4TH ST/US 84	253+17.14	44.34 RT	6.00′
	EAST	N. 4TH ST	253+71.06	55.75 RT	6.00′
		US 84	253+84.09	41.86 RT	6.00′
	WEST	N. 4TH ST	253+29.09	52.49 LT	6.00′
		US 84	253+15.59	39.73 LT	6.00′
N. 3RD ST	NORTH	N. 3RD ST	258+45.35	51.23 LT	6.00′
	SOUTH	N. 3RD ST	257+89.66	47.22 RT	6.00′
	EAST	N. 3RD ST	258+53.91	47.38 RT	6.00′
	WEST	N. 3RD ST	258+03.58	50.99 LT	6.00′
DALLAS ST	NORTH	DALLAS ST	285+98.00	48.00 LT	5.00′
	SOUTH	DALLAS ST	285+41.99	47.86 RT	5.00′
		US 84	285+23.45	39.11 RT	5.00′
	EAST	DALLAS ST	285+96.54	48.70 RT	5.00′
	WEST	DALLAS ST	285+40.55	53.85 LT	5.00′
		US 84	285+25.30	44.66 LT	5.00′
PRESTON ST	NORTH	PRESTON ST	292+57.51	46.62 LT	6.00′
TURNER ST	NORTH	PRESTON ST	295+82.58	51.00 LR	6.00′
	SOUTH	PRESTON ST	295+23.75	41.79 RT	6.00′
		US 84	295+36.58	51.85 RT	6.00′
	EAST	PRESTON ST	295+82.82	51.76 RT	6.00′
	WEST	PRESTON ST	295+36.85	50.90 LT	6.00′
		US 84	295+23.59	38.72 LT	6.00′
HOOD ST	NORTH	HOOD ST	299+13.65	45.18 LT	6.00′
	SOUTH	HOOD ST	298+74.24	49.57 RT	6.00′
	EAST	HOOD ST	299+15.08	48.14 RT	6.00′
	WEST	HOOD ST	298+74.20	45.15 LT	6.00′
GARRISON ST	NORTH	GARRISON ST	311+81.28	46.10 LT	6.00′
	SOUTH	GARRISON ST	311+45.68	51.90 RT	6.00′
		US 84	311+38.52	43.68 RT	6.00′
	EAST	GARRISON ST	311+91.63	53.64 RT	6.00′
	WEST	GARRISON ST	311+49.39	46.51 LT	6.00′
		US 84	311+38.40	37.57 LT	6.00′
HUBERT ST	NORTH	HUBERT ST	315+17.80	43.93 LT	6.00′
	WEST	HUBERT ST	314+77.68	38.56 LT	6.00′
CLIFTON ST	NORTH	CLIFTON ST	334+69.76	45.51 LT	6.00′
	SOUTH	CLIFTON ST	333+69.61	55.91 RT	5.00′
		US 84	333+61.54	47.55 RT	5.00′
	EAST	CLIFTON ST	334+22.44	54.66 RT	6.00′
	WEST	US 84	334+02.88	38.34 lt	5.00′
		CLIFTON ST	334+24.43	48.88 LT	6.00′

NOTES:

1. CONTROL POINTS FOR RAMPS ARE SHOWN TO THE NOMINAL FACE OF CURB.
2. ALL STATIONS AND OFFSETS ARE BASED ON ℄ US 84.
3. LOCATION OF CURB RAMPS MAY BE ADJUSTED TO FIT FIELD CONDITIONS AS APPROVED AND DIRECTED BY THE ENGINEER.

12/21/2020

Kimley»Horn F-928

© 2021

Texas Department of Transportation

CURB RAMP DATA

SCALE: NTS SHEET 3 OF 3

FED.RD. DIV.NO.	PROJECT ID.	HIGHWAY NO.
6	(SEE TITLE SHEET)	US 84

STATE	DIST.	COUNTY	SHEET NO.
TEXAS	WAC	MCLENNAN	
CONT.	SECT.	JOB	135
0055	15	072	

FILENAME: pw:\\kh-pw.bentley.com:kh-pw-01\Documents\01 Active Projects\TX-FTW-063586010 - US 84 (Waco Drive)\WAC 005515072\4 - Design\Plan Set\3. Roadway\US84_DET_CRD03.dgn
PLOTTED: 12/21/2020

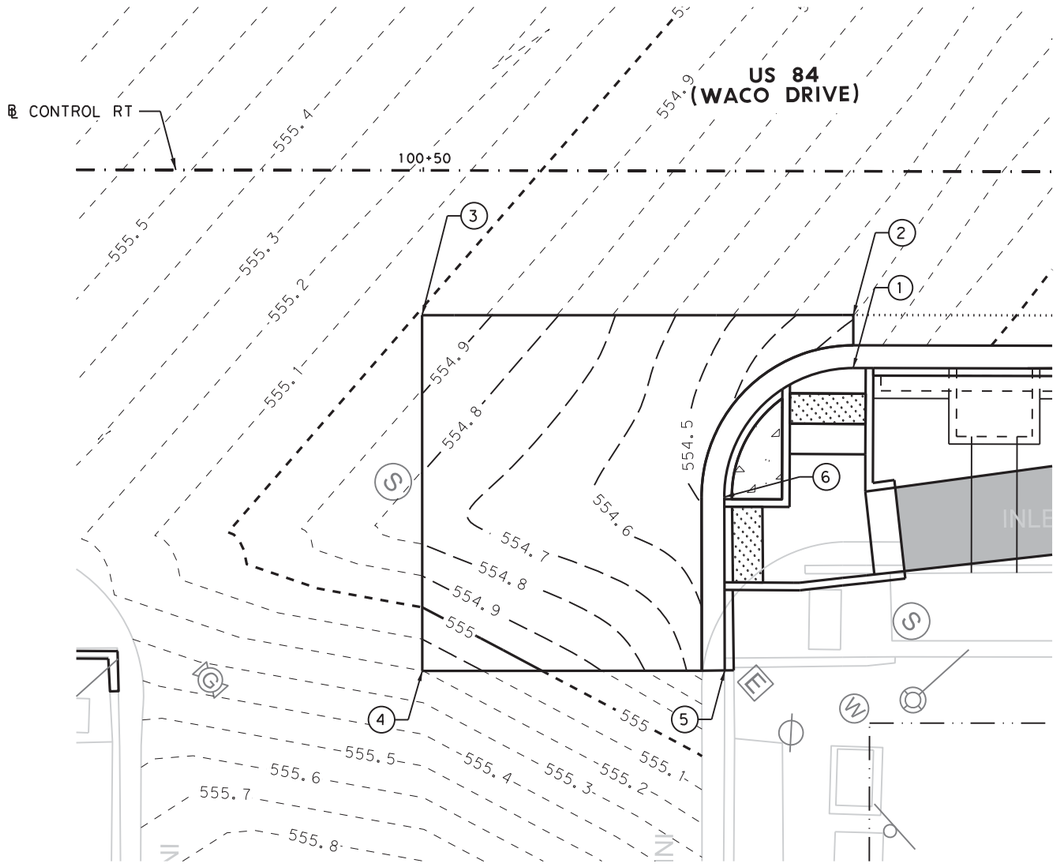

POINT NO	STATION	OFFSET	TP ELEVATION
1	100+78.40	13.00' RT	538.51
2	100+78.40	9.50' RT	554.30
3	100+49.85	9.50' RT	554.99
4	100+49.93	33.00' RT	555.20
5	100+69.96	33.00' RT	554.64
6	100+69.90	21.50' RT	554.79

GUTTER SLOPE	
5 TO 6	1.47%
6 TO 1	1.47%

LEGEND

- CONTOURS - PROPOSED MAJOR (1.0')
- CONTOURS - PROPOSED MINOR (0.1')
- CONTOURS - EXISTING MAJOR (1.0')
- CONTOURS - EXISTING MINOR (0.1')

NOTES:

1. SEE SIDEWALK LAYOUTS FOR ADDITIONAL INFORMATION.
2. SEE MISCELLANEOUS ROADWAY DETAILS FOR ADDITIONAL INFORMATION.
3. ALL STATIONS AND OFFSETS ARE BASED ON ℄ CONTROL RT.
4. CALLOUTS TO CURB ARE SHOWN TO THE NOMINAL FACE, UNLESS NOTED OTHERWISE.

03/01/2021

Kimley»Horn F-928

© 2021

Texas Department of Transportation

GRADING LAYOUT

AT INDUSTRIAL DRIVE

SHEET 1 OF 2

FED.RD. DIV.NO.	PROJECT ID.	HIGHWAY NO.
6	(SEE TITLE SHEET)	US 84

STATE	DIST.	COUNTY	SHEET NO.
TEXAS	WAC	MCLENNAN	136
CONT.	SECT.	JOB	
0055	15	072	

FILENAME: pw:\\kh-pw.bentley.com:kh-pw-01\Documents\01 Active Projects\TX-FTW-063586010 - US 84 (Waco Drive)\WAC 0055150721\4 - Design\Plan Set\3. Roadway\US84_RDW_GRD01.dgn
PLOTTED: 12/21/2020

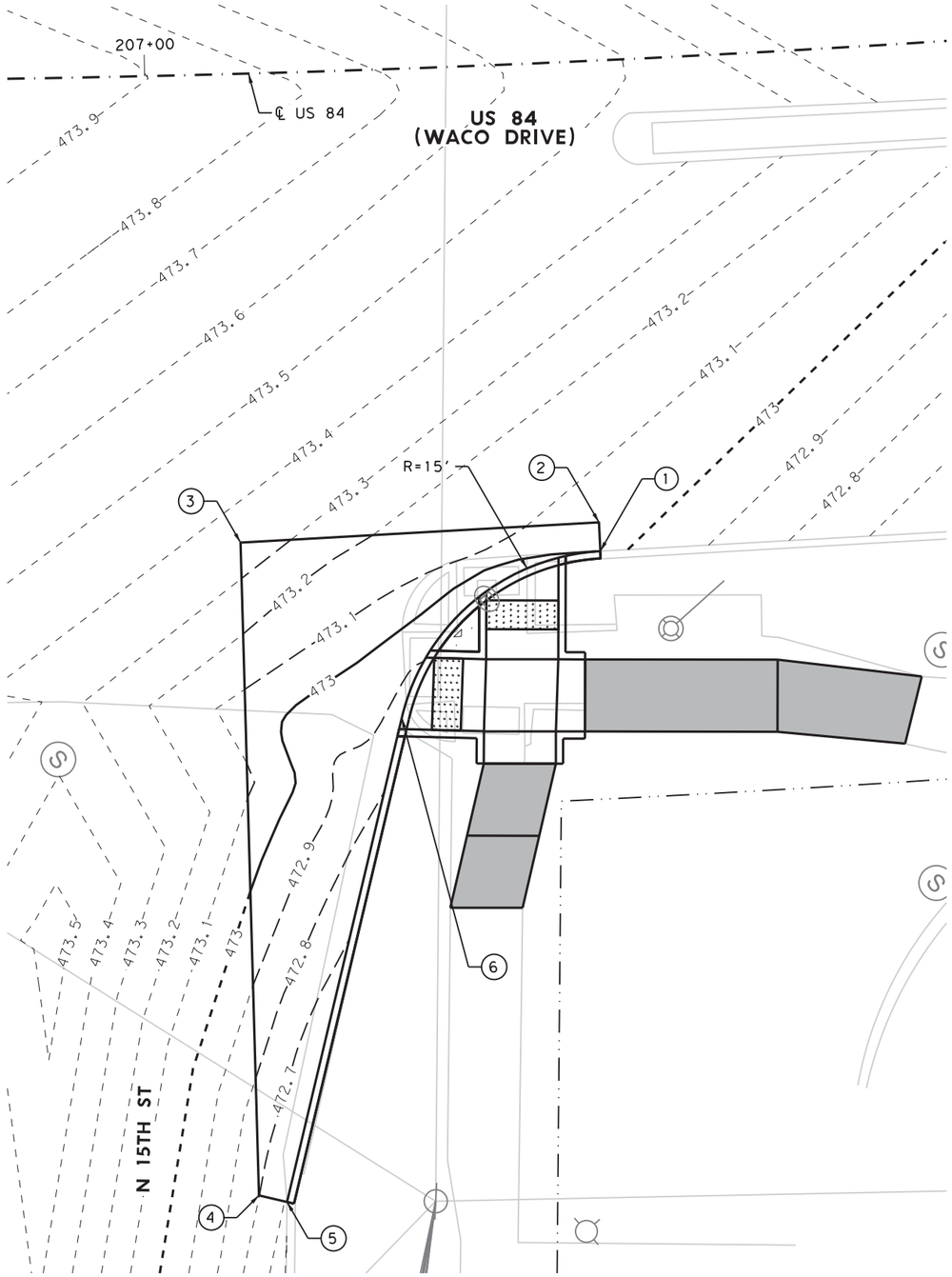

LEGEND

———	CONTOURS - PROPOSED MAJOR (1.0')
— — —	CONTOURS - PROPOSED MINOR (0.1')
- - - - - -	CONTOURS - EXISTING MAJOR (1.0')
- - - - - -	CONTOURS - EXISTING MINOR (0.1')

NOTES:

1. SEE SIDEWALK LAYOUTS FOR ADDITIONAL INFORMATION.
2. SEE MISCELLANEOUS ROADWAY DETAILS FOR ADDITIONAL INFORMATION.
3. ALL STATIONS AND OFFSETS ARE BASED ON ℄ US 84.
4. CALLOUTS TO CURB ARE SHOWN TO THE NOMINAL FACE, UNLESS NOTED OTHERWISE.

POINT NO	STATION	OFFSET	TP ELEVATION
1	207+30.07	34.00' RT	473.03
2	207+30.07	32.00' RT	473.05
3	207+05.78	32.50' RT	473.35
4	207+05.84	77.77' RT	472.70
5	207+07.67	78.29' RT	472.58
6	207+16.27	45.00' RT	472.85

GUTTER SLOPE	
1 TO 5	0.95%

03/01/2021

Kimley»Horn F-928

© 2021

Texas Department of Transportation

GRADING LAYOUT

AT N 15TH ST

SHEET 2 OF 2

FED.RD. DIV.NO.	PROJECT ID.	HIGHWAY NO.
6	(SEE TITLE SHEET)	US 84

STATE	DIST.	COUNTY	SHEET NO.
TEXAS	WAC	MCLENNAN	137
CONT.	SECT.	JOB	
0055	15	072	

FILENAME: pw:\\kh-pw.bentley.com:kh-pw-01\Documents\01 Active Projects\TX-FTW-063586010 - US 84 (Waco Drive)\WAC 005515072\4 - Design\Plan Set\3. Roadway\US84_RDW_GRD02.dgn
PLOTTED: 12/21/2020

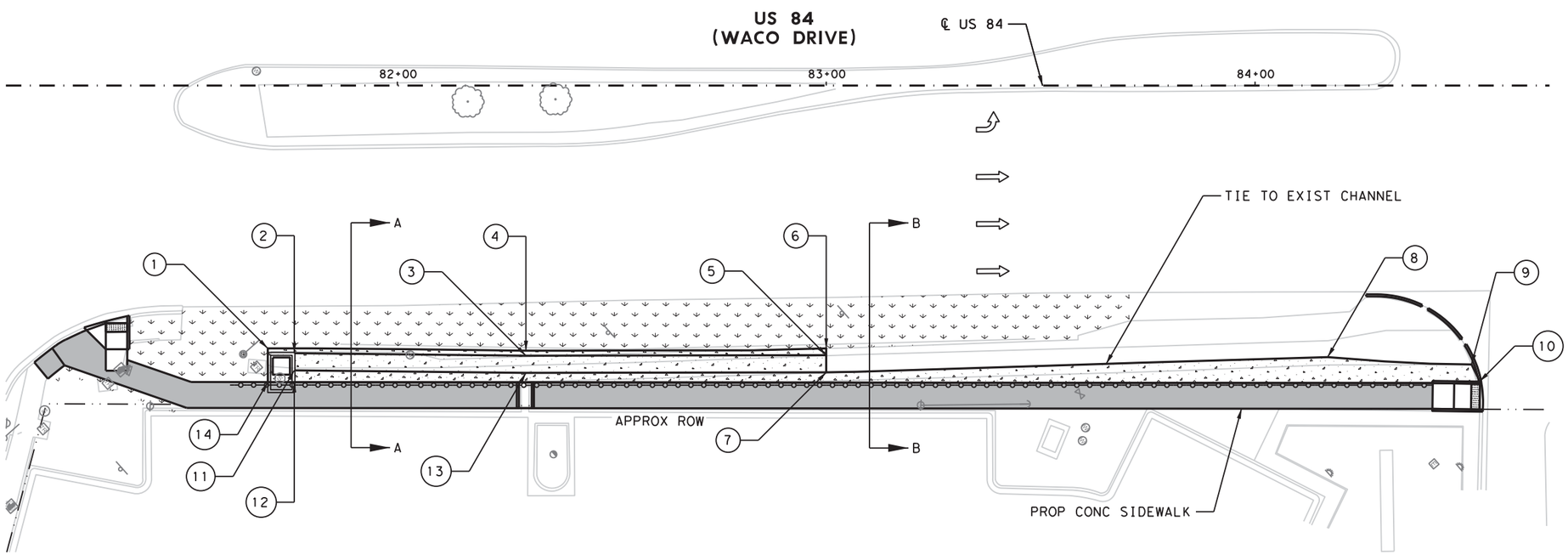

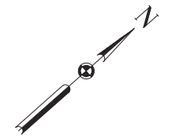

NOTES:

1. REFER TO TXDOT STANDARD CRR FOR ADDITIONAL INFORMATION.
2. ALL STATIONS AND OFFSETS ARE BASED ON ℄ US 84.

POINT NO	STATION	OFFSET	℄ ELEV
1	81+69.78	61.25' RT	-
2	81+75.94	62.39' RT	551.51'
3	82+29.97	62.98' RT	551.67'
4	82+29.97	61.82' RT	-
5	83+00.00	62.83' RT	551.88'
6	83+00.00	61.27' RT	-
7	83+00.00	66.83' RT	511.88'
8	84+16.97	63.30' RT	MATCH EXIST
9	84+50.53	65.03' RT	MATCH EXIST
10	84+52.34	69.00' RT	-
11	81+75.94	66.39' RT	551.51'
12	81+75.94	69.14' RT	-
13	82+29.97	66.98' RT	551.67'
14	81+69.78	69.13' RT	-

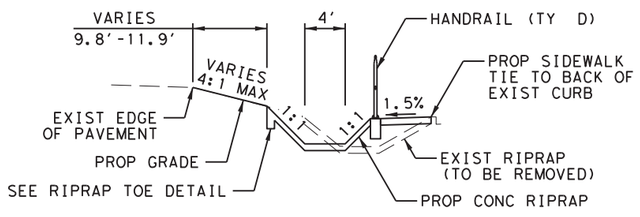

SECTION A-A

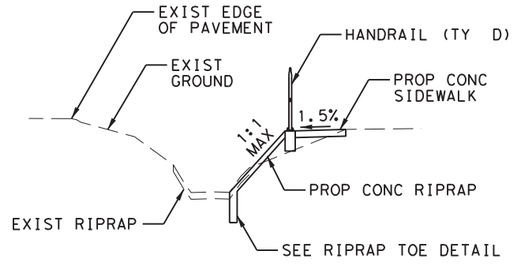

SECTION B-B

03/01/2021

Kimley»Horn F-928

© 2021

Texas Department of Transportation

SPECIAL NOTES & DETAILS

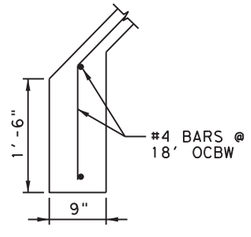

RIPRAP TOE DETAIL

LEGEND

	APPROX ROW	L1	LANDING COMMON	R	RAMP
	ELECTRIC BOX/VAULT	LS	LEVEL SIDEWALK (2% MAX)		RIPRAP (CONC)
ES	EXIST SIDEWALK	SL	LONGITUDINAL SLOPES MAY NOT EXCEED 5% & CROSS SLOPES MAY NOT EXCEED 2%		SAWCUT LINE
ER	EXISTING RAMP				SIDEWALK WALL
	FENCE	RAD	RADIUS		SIGN (EXISTING)
	FIRE HYDRANT	S	MANHOLE	XX-X	SIGN NUMBER
F	FLARE		PED SIGNAL POLE (EXIST)		TRAFFIC FLOW
G	GAS METER		PED SIGNAL POLE (PROP)		TRAF SIGNAL POLE (EXIST)
	GUY ANCHOR		POWER/ILLUMINATION POLE		TRAF SIGNAL POLE (PROP)
	HANDRAIL		PROPOSED ASPHALT PAVING	T	TRANSITION
L	LANDING		PROPOSED CONCRETE PAVING		TREE/BUSHES
	PROPOSED SMALL SIGN		PROPOSED SIDEWALK	W	WATER METER

RIPRAP LAYOUT

BETWEEN N NEW RD AND
LOOP 396 (N VALLEY MILLS DR)

SHEET 1 OF 2

FED. RD. DIV. NO.	PROJECT ID.	HIGHWAY NO.
6	(SEE TITLE SHEET)	US 84

STATE	DIST.	COUNTY	SHEET NO.
TEXAS	WAC	MCLENNAN	138
CONT.	SECT.	JOB	
0055	15	072	

FILENAME: pw:\\kh-pw.bentley.com:kh-pw-01\Documents\01 Active Projects\TX-FTW-063586010 - US 84 (Waco Drive)\WAC 0055150721\4 - Design\Plan Set\3. Roadway\US84_RDW_RIP01.dgn
PLOTTED: 12/21/2020

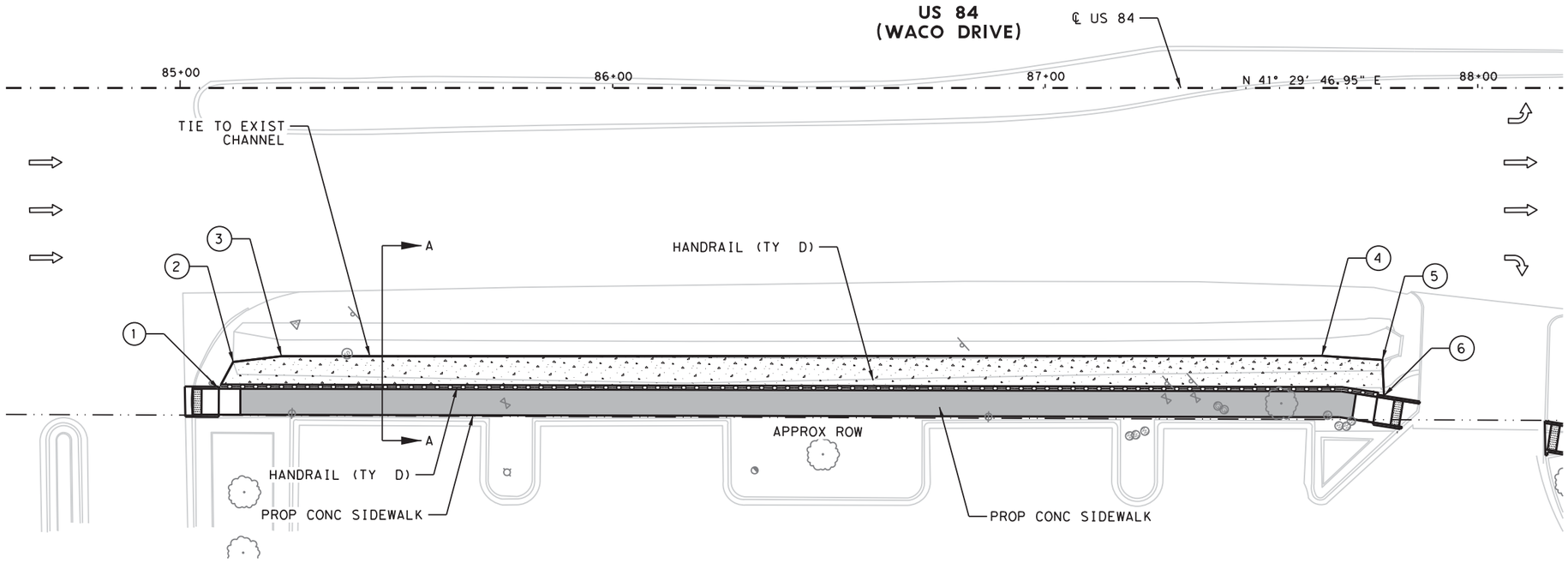

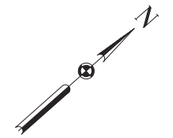

NOTES:

1. REFER TO TXDOT STANDARD CRR FOR ADDITIONAL INFORMATION.
2. ALL STATIONS AND OFFSETS ARE BASED ON ℄ US 84.

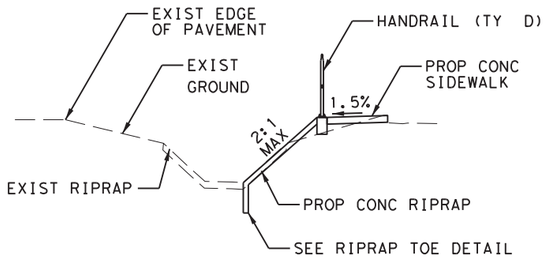

SECTION A-A

POINT NO	STATION	OFFSET
1	85+08.94	69.55' RT
2	85+12.25	63.34' RT
3	85+23.42	62.03' RT
4	87+64.00	61.93' RT
5	87+77.95	62.87' RT
6	87+78.33	71.16' RT

03/01/2021

Kimley»Horn F-928

© 2021

Texas Department of Transportation

SPECIAL NOTES & DETAILS

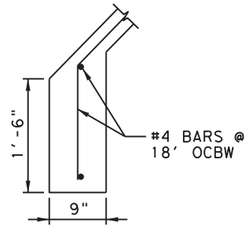

RIPRAP TOE DETAIL

LEGEND

APPROX ROW	L1	LANDING COMMON	R	RAMP
ELECTRIC BOX/VAULT	LS	LEVEL SIDEWALK (2% MAX)		RIPRAP (CONC)
ES EXIST SIDEWALK	SL	LONGITUDINAL SLOPES MAY NOT EXCEED 5% & CROSS SLOPES MAY NOT EXCEED 2%		SAWCUT LINE
ER EXISTING RAMP				SIDEWALK WALL
FENCE	RAD	RADIUS		SIGN (EXISTING)
FIRE HYDRANT	S	MANHOLE	XX-X	SIGN NUMBER
F FLARE		PED SIGNAL POLE (EXIST)		TRAFFIC FLOW
G GAS METER		PED SIGNAL POLE (PROP)		TRAF SIGNAL POLE (EXIST)
GUY ANCHOR		POWER/ILLUMINATION POLE		TRAF SIGNAL POLE (PROP)
HANDRAIL		PROPOSED ASPHALT PAVING	T	TRANSITION
L LANDING		PROPOSED CONCRETE PAVING		TREE/BUSHES
PROPOSED SMALL SIGN		PROPOSED SIDEWALK	W	WATER METER

RIPRAP LAYOUT

BETWEEN N NEW RD AND
LOOP 396 (N VALLEY MILLS DR)

SHEET 2 OF 2

FED. RD. DIV. NO.	PROJECT ID.	HIGHWAY NO.
6	(SEE TITLE SHEET)	US 84

STATE	DIST.	COUNTY	SHEET NO.
TEXAS	WAC	MCLENNAN	139
CONT.	SECT.	JOB	
0055	15	072	

FILENAME: pw:\\kh-pw.bentley.com:kh-pw-01\Documents\01 Active Projects\TX-FTW-063586010 - US 84 (Waco Drive)\WAC 0055150721\4 - Design\Plan Set\3. Roadway\US84_RDW_RIP02.dgn
PLOTTED: 12/21/2020

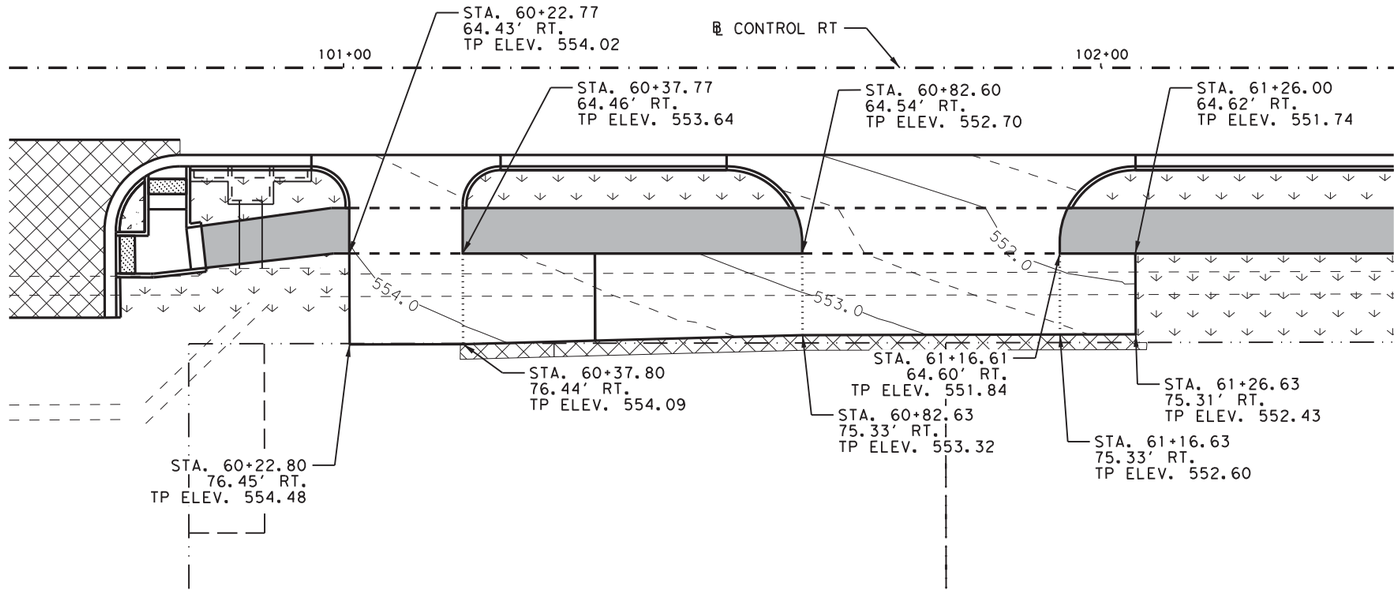

DRIVEWAYS 06-03 & 07-03

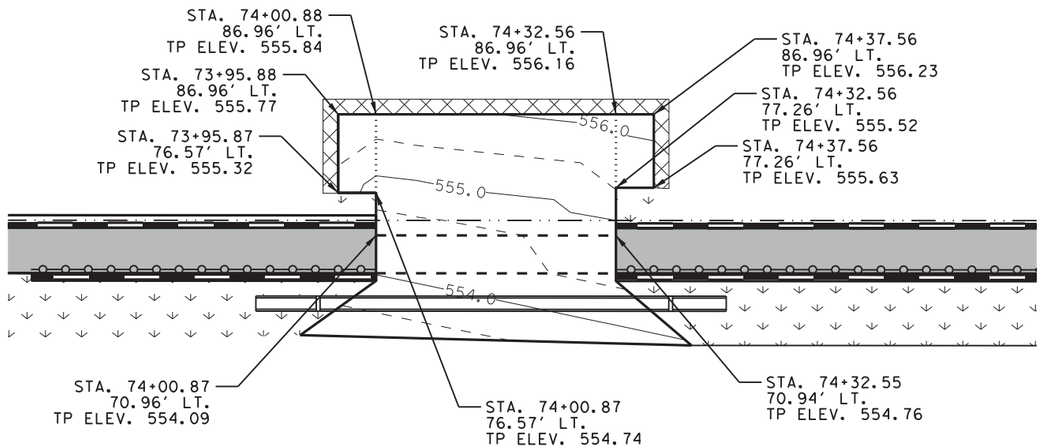

DRIVEWAY 10-02

0' 10' 20'
SCALE

LEGEND

- PROPOSED MAJOR CONTOUR (1.0 FT)
- PROPOSED MINOR CONTOUR (0.5 FT)
- PROPOSED BREAK LINE
- APPROX ROW

NOTES:

1. REFER TO SIDEWALK LAYOUTS, MISCELLANEOUS DETAILS, AND DRIVEWAY DETAILS FOR MORE INFORMATION.
2. ALL STATIONING AND OFFSETS ARE BASED ON ℄ US 84.

12/21/2020

Kimley»Horn F-928

© 2021

Texas Department of Transportation

US 84 TRAFFIC SIGNAL AND SIDEWALK IMPROVEMENTS

DRIVEWAY GRADING LAYOUTS

SHEET 1 OF 7

FED. RD. DIV. NO.	PROJECT ID.	HIGHWAY NO.
6	(SEE TITLE SHEET)	US 84

STATE	DIST.	COUNTY	SHEET NO.
TEXAS	WAC	MCLENNAN	140
CONT.	SECT.	JOB	
0055	15	072	

FILENAME: pw:\\kh-pw.bentley.com:kh-pw-01\Documents\01 Active Projects\TX-FTW-063586010 - US 84 (Waco Drive)\WAC 005515072\4 - Design\Plan Set\3. Roadway\US84_RDW_DRWYGRADE_01.dgn
PLOTTED: 12/21/2020

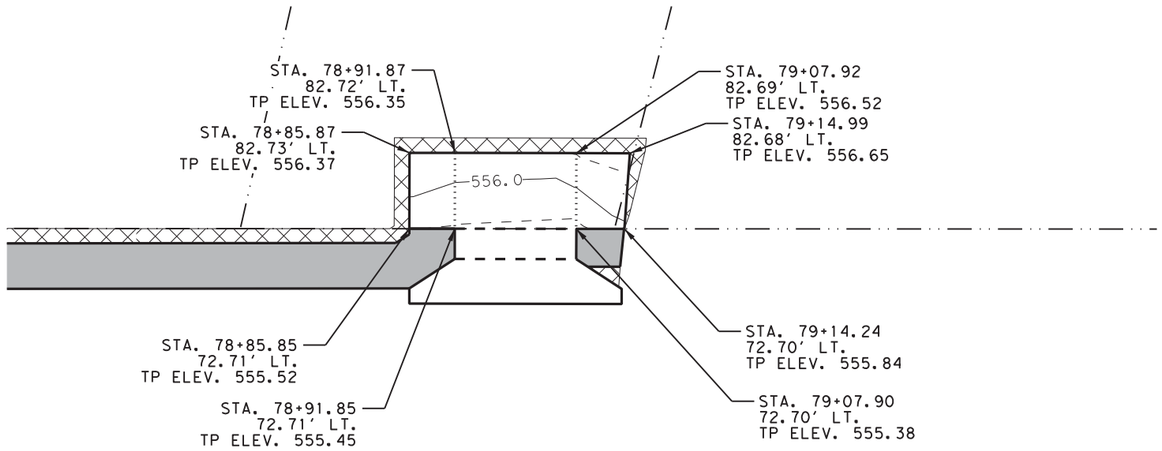

DRIVEWAY 12-01

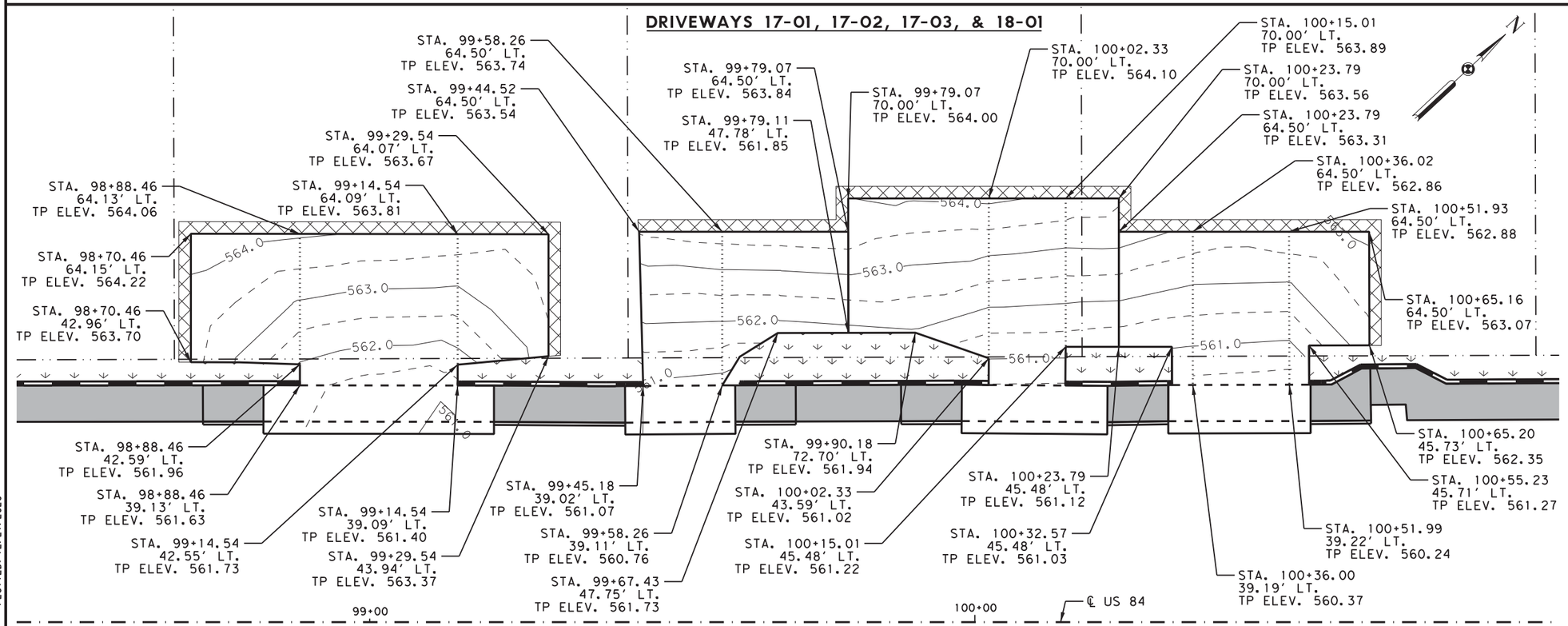

0' 10' 20'

SCALE

LEGEND

- PROPOSED MAJOR CONTOUR (1.0 FT)
- PROPOSED MINOR CONTOUR (0.5 FT)
- PROPOSED BREAK LINE
- APPROX ROW

NOTES:

1. REFER TO SIDEWALK LAYOUTS, MISCELLANEOUS DETAILS, AND DRIVEWAY DETAILS FOR MORE INFORMATION.
2. ALL STATIONING AND OFFSETS ARE BASED ON ℄ US 84.

STATE OF TEXAS · JEFFREY S. RUTH · 129021 · LICENSED PROFESSIONAL ENGINEER

12/21/2020

Kimley»Horn F-928

© 2021

Texas Department of Transportation

US 84 TRAFFIC SIGNAL AND SIDEWALK IMPROVEMENTS

DRIVEWAY GRADING LAYOUTS

SHEET 2 OF 7

FED. RD. DIV. NO.	PROJECT ID.	HIGHWAY NO.
6	(SEE TITLE SHEET)	US 84

STATE	DIST.	COUNTY	SHEET NO.
TEXAS	WAC	MCLENNAN	141
CONT.	SECT.	JOB	
0055	15	072	

FILENAME: pw:\\kh-pw.bentley.com:kh-pw-01\Documents\01 Active Projects\TX-FTW-063586010 - US 84 (Waco Drive)\WAC 0055150724 - Design\Plan Set\3. Roadway\US84_RDW_DRWYGRADE_02.dgn
PLOTTED: 12/21/2020

DRIVEWAYS 18-02 & 18-03

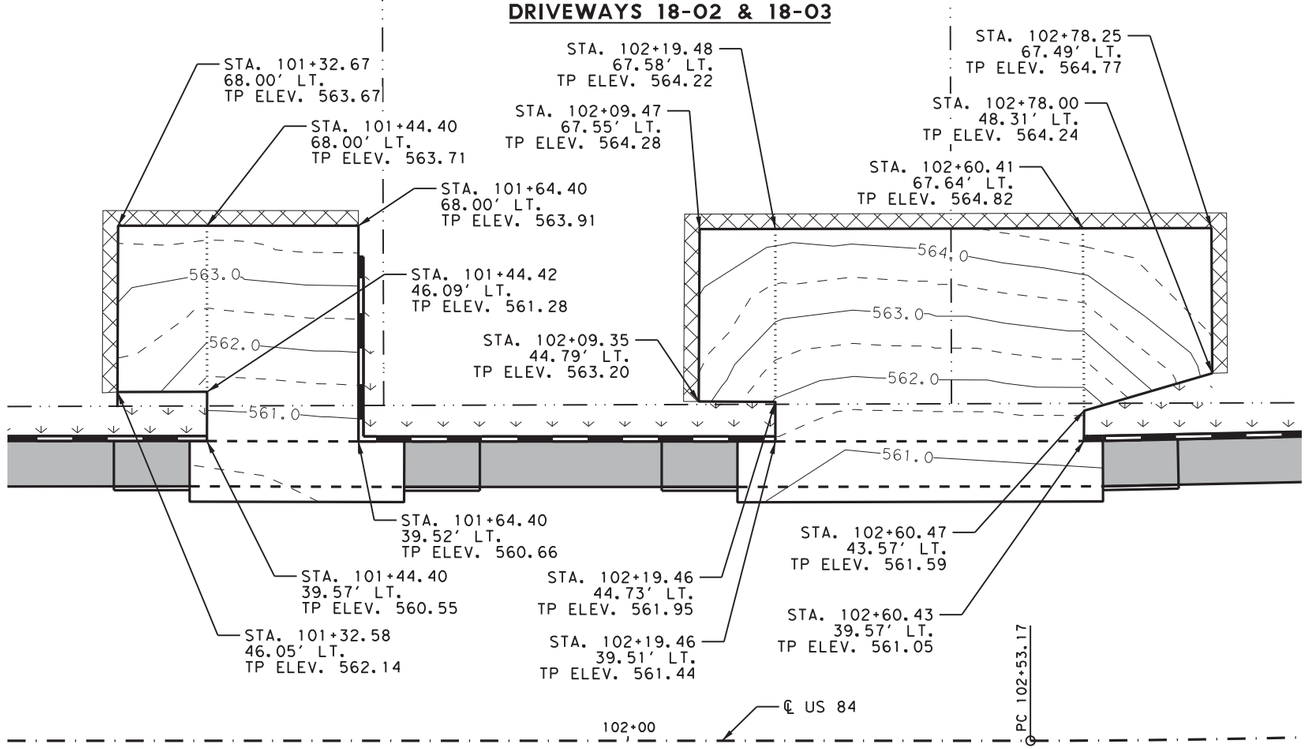

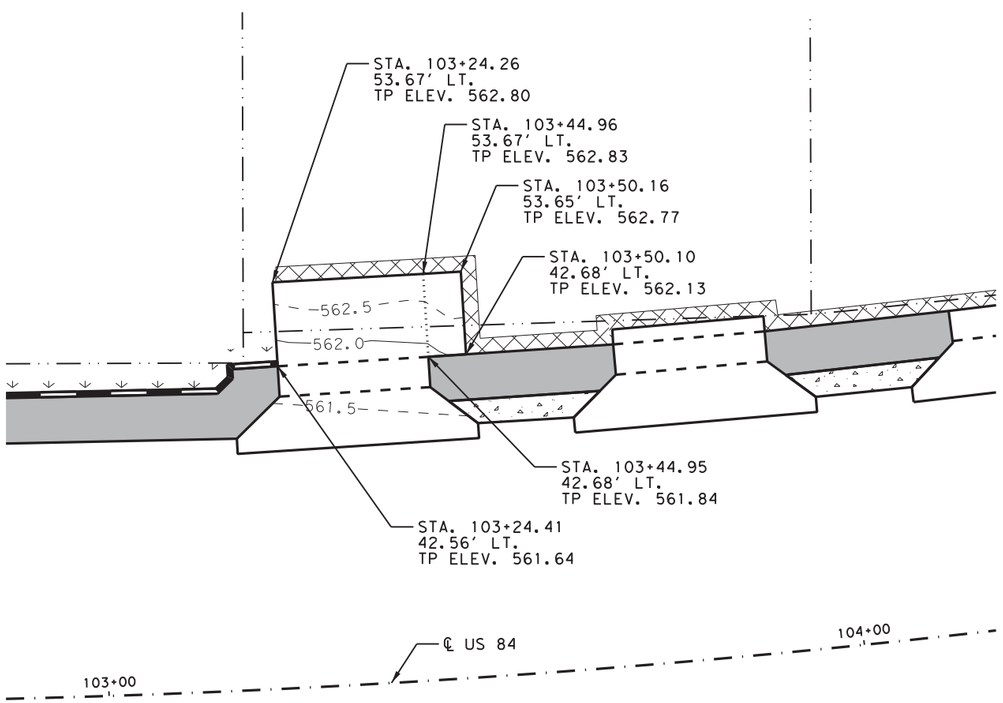

DRIVEWAY 18-04

0' 10' 20'

SCALE

LEGEND

- PROPOSED MAJOR CONTOUR (1.0 FT)
- PROPOSED MINOR CONTOUR (0.5 FT)
- PROPOSED BREAK LINE
- APPROX ROW

NOTES:

1. REFER TO SIDEWALK LAYOUTS, MISCELLANEOUS DETAILS, AND DRIVEWAY DETAILS FOR MORE INFORMATION.
2. ALL STATIONING AND OFFSETS ARE BASED ON ℄ US 84.

STATE OF TEXAS
JUSTIN T. RUTH
103021
LICENSED
PROFESSIONAL ENGINEER

12/21/2020

Kimley»Horn F-928

© 2021

Texas Department of Transportation

US 84 TRAFFIC SIGNAL AND SIDEWALK IMPROVEMENTS

DRIVEWAY GRADING LAYOUTS

SHEET 3 OF 7

FED. RD. DIV. NO.	PROJECT ID.	HIGHWAY NO.
6	(SEE TITLE SHEET)	US 84

STATE	DIST.	COUNTY	SHEET NO.
TEXAS	WAC	MCLENNAN	142
CONT.	SECT.	JOB	
0055	15	072	

FILENAME: pw:\\kh-pw.bentley.com:kh-pw-01\Documents\01 Active Projects\TX-FTW-063586010 - US 84 (Waco Drive)\WAC 0055150721\4 - Design\Plan Set\3. Roadway\US84_RDW_DRWYGRADE_03.dgn
PLOTTED: 12/21/2020

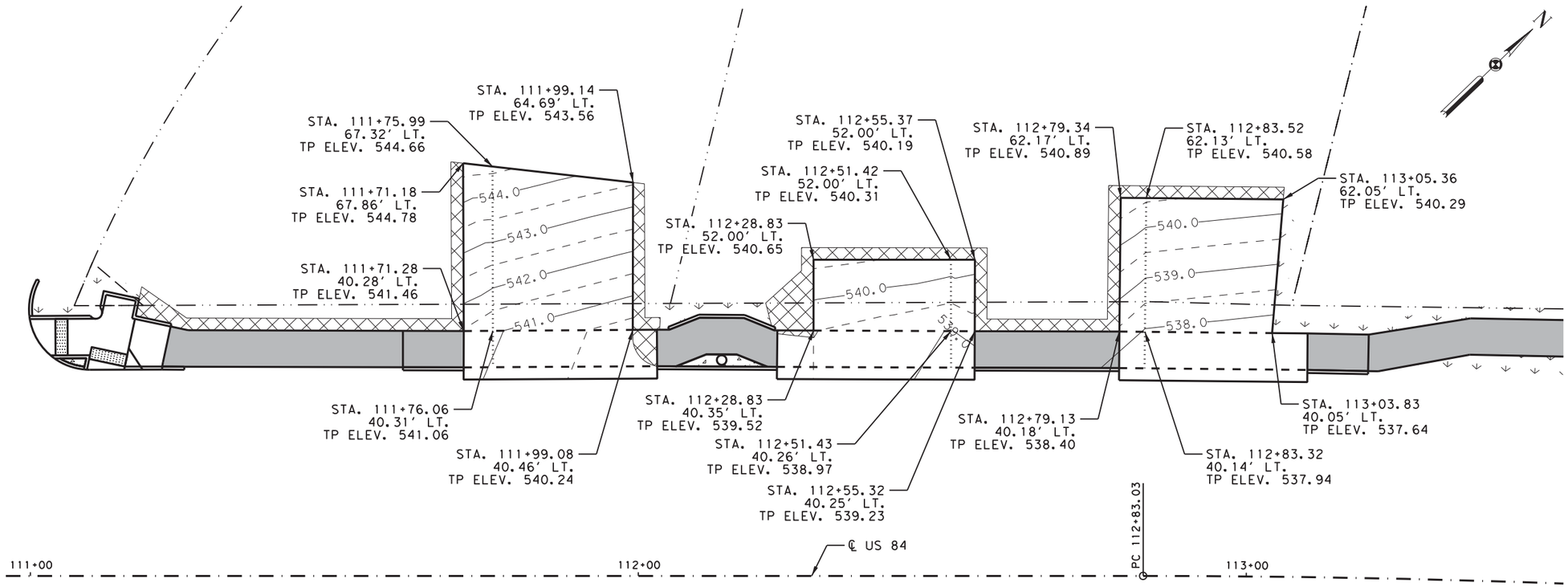

DRIVEWAYS 21-01, 21-02, 21-03, 21-04, & 21-05

0' 10' 20'
SCALE

LEGEND

- PROPOSED MAJOR CONTOUR (1.0 FT)
- PROPOSED MINOR CONTOUR (0.5 FT)
- PROPOSED BREAK LINE
- APPROX ROW

NOTES:

1. REFER TO SIDEWALK LAYOUTS, MISCELLANEOUS DETAILS, AND DRIVEWAY DETAILS FOR MORE INFORMATION.
2. ALL STATIONING AND OFFSETS ARE BASED ON ℄ US 84.

12/21/2020

Kimley»Horn F-928

© 2021

Texas Department of Transportation

US 84 TRAFFIC SIGNAL AND SIDEWALK IMPROVEMENTS

DRIVEWAY GRADING LAYOUTS

SHEET 4 OF 7

FED. RD. DIV. NO.	PROJECT ID.	HIGHWAY NO.
6	(SEE TITLE SHEET)	US 84

STATE	DIST.	COUNTY	SHEET NO.
TEXAS	WAC	MCLENNAN	143
CONT.	SECT.	JOB	
0055	15	072	

FILENAME: pw:\\kh-pw.bentley.com:kh-pw-01\Documents\01 Active Projects\TX-FTW-063586010 - US 84 (Waco Drive)\WAC 005515072\4 - Design\Plan Set\3. Roadway\US84_RDW_DRWYGRADE_04.dgn
PLOTTED: 12/21/2020

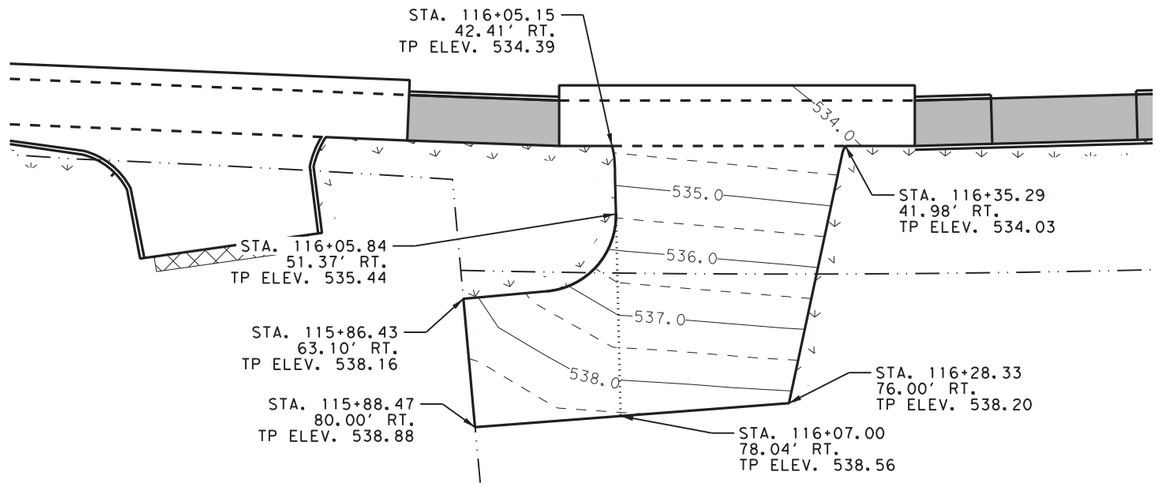

DRIVEWAY 22-03

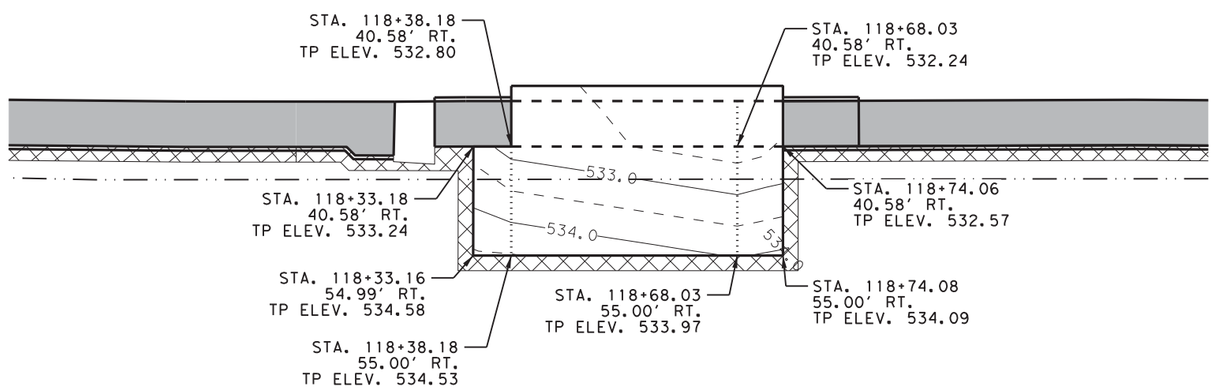

DRIVEWAY 23-01

0' 10' 20'

SCALE

LEGEND

- PROPOSED MAJOR CONTOUR (1.0 FT)
- PROPOSED MINOR CONTOUR (0.5 FT)
- PROPOSED BREAK LINE
- APPROX ROW

NOTES:

1. REFER TO SIDEWALK LAYOUTS, MISCELLANEOUS DETAILS, AND DRIVEWAY DETAILS FOR MORE INFORMATION.
2. ALL STATIONING AND OFFSETS ARE BASED ON ℄ US 84.

12/21/2020

Kimley»Horn F-928

© 2021

Texas Department of Transportation

US 84 TRAFFIC SIGNAL AND SIDEWALK IMPROVEMENTS

DRIVEWAY GRADING LAYOUTS

SHEET 5 OF 7

FED. RD. DIV. NO.	PROJECT ID.	HIGHWAY NO.
6	(SEE TITLE SHEET)	US 84

STATE	DIST.	COUNTY	SHEET NO.
TEXAS	WAC	MCLENNAN	144
CONT.	SECT.	JOB	
0055	15	072	

FILENAME: pw:\\kh-pw.bentley.com:kh-pw-01\Documents\01 Active Projects\TX-FTW-063586010 - US 84 (Waco Drive)\WAC 005515072\4 - Design\Plan Set\3. Roadway\US84_RDW_DRWYGRADE_05.dgn
PLOTTED: 12/21/2020

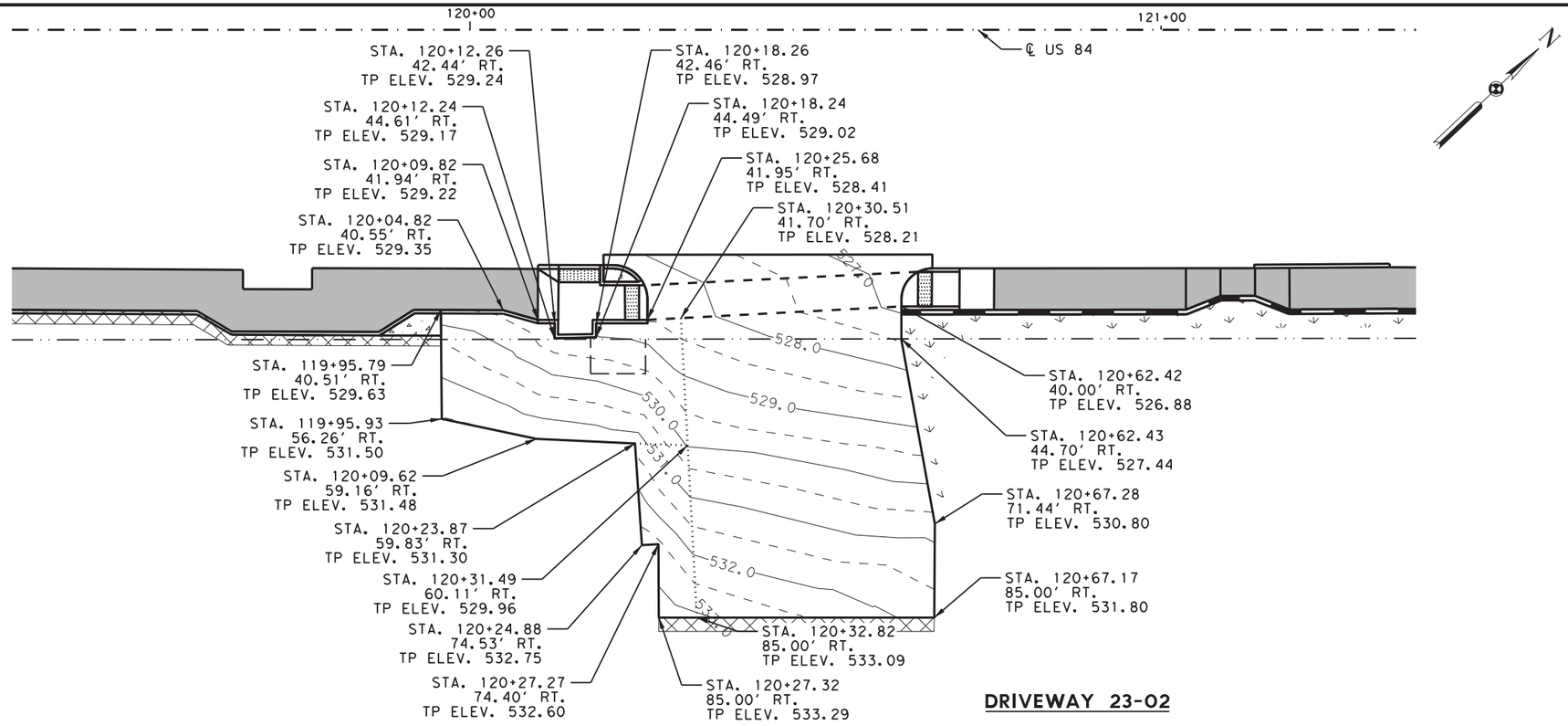

DRIVEWAY 23-02

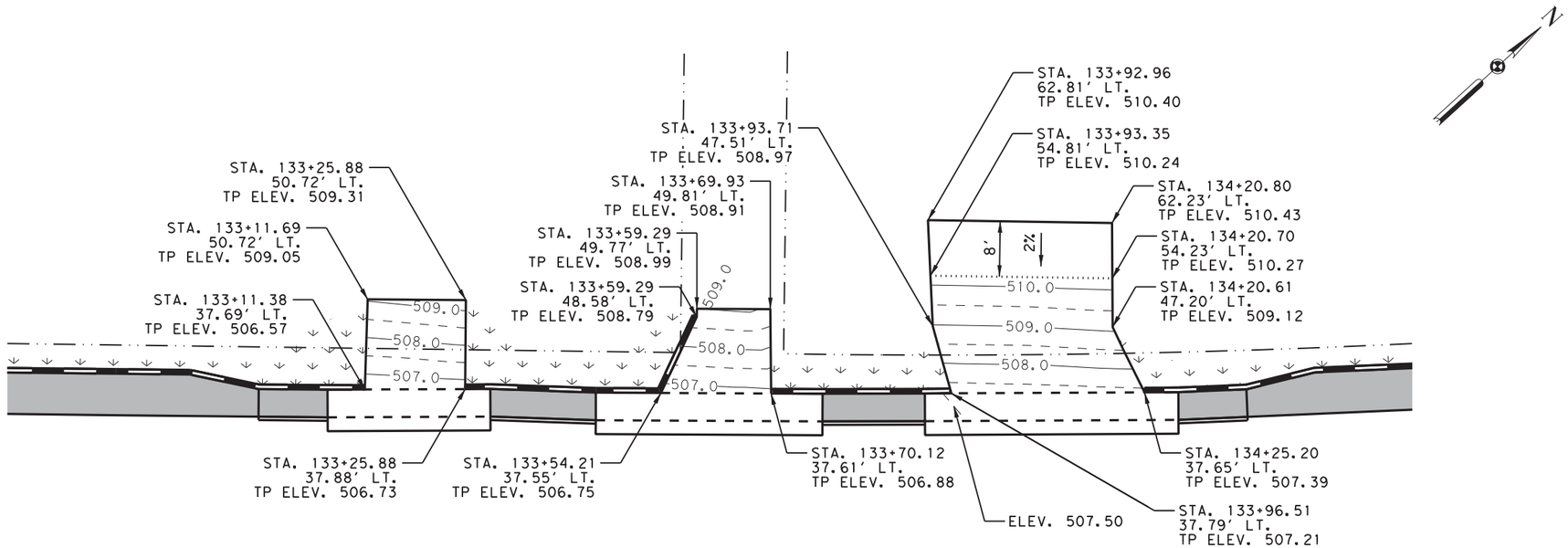

DRIVEWAYS 27-01, 27-02 & 27-03

0' 10' 20'
SCALE

LEGEND

- PROPOSED MAJOR CONTOUR (1.0 FT)
- PROPOSED MINOR CONTOUR (0.5 FT)
- PROPOSED BREAK LINE
- APPROX ROW

NOTES:

1. REFER TO SIDEWALK LAYOUTS, MISCELLANEOUS DETAILS, AND DRIVEWAY DETAILS FOR MORE INFORMATION.
2. ALL STATIONING AND OFFSETS ARE BASED ON ℄ US 84.

03/01/2021

Kimley»Horn F-928

© 2021

Texas Department of Transportation

DRIVEWAY GRADING LAYOUTS

SHEET 6 OF 7

FED. RD. DIV. NO.	PROJECT ID.	HIGHWAY NO.
6	(SEE TITLE SHEET)	US 84

STATE	DIST.	COUNTY	SHEET NO.
TEXAS	WAC	MCLENNAN	145
CONT.	SECT.	JOB	
0055	15	072	

FILENAME: pw:\\kh-pw.bentley.com:kh-pw-01\Documents\01 Active Projects\TX-FTW-063586010 - US 84 (Waco Drive)\WAC 005515072\4 - Design\Plan Set\3. Roadway\US84_RDW_DRWYGRADE_06.dgn
PLOTTED: 12/21/2020

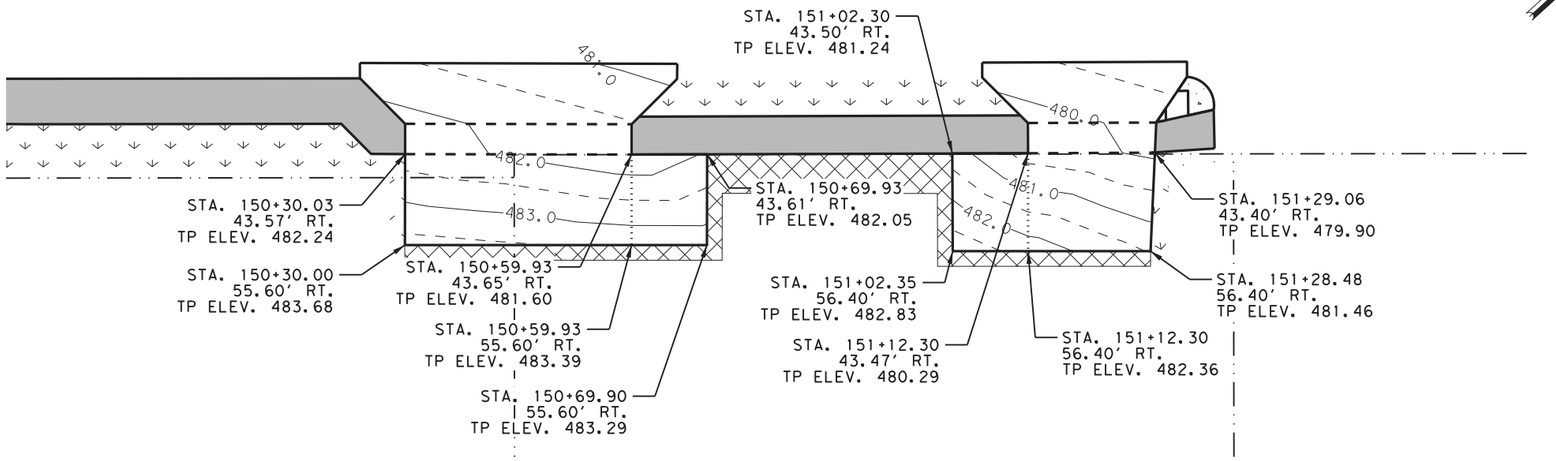

DRIVEWAYS 31-02 & 32-01

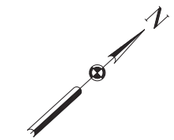

LEGEND

- PROPOSED MAJOR CONTOUR (1.0 FT)
- PROPOSED MINOR CONTOUR (0.5 FT)
- PROPOSED BREAK LINE
- APPROX ROW

NOTES:

1. REFER TO SIDEWALK LAYOUTS, MISCELLANEOUS DETAILS, AND DRIVEWAY DETAILS FOR MORE INFORMATION.
2. ALL STATIONING AND OFFSETS ARE BASED ON ℄ US 84.

03/01/2021

Kimley»Horn F-928

© 2021

Texas Department of Transportation

DRIVEWAY GRADING LAYOUTS

SHEET 6A OF 7

FED.RD. DIV.NO.	PROJECT ID.	HIGHWAY NO.
6	(SEE TITLE SHEET)	US 84

STATE	DIST.	COUNTY	SHEET NO.
TEXAS	WAC	MCLENNAN	145A
CONT.	SECT.	JOB	
0055	15	072	

FILENAME: pw:\\kh-pw.bentley.com:kh-pw-01\Documents\01 Active Projects\TX-FTW-063586010 - US 84 (Waco Drive)\WAC 005515072\4 - Design\Plan Set\3. Roadway\US84_RDW_DRWYGRADE_06A.dgn
PLOTTED: 12/21/2020

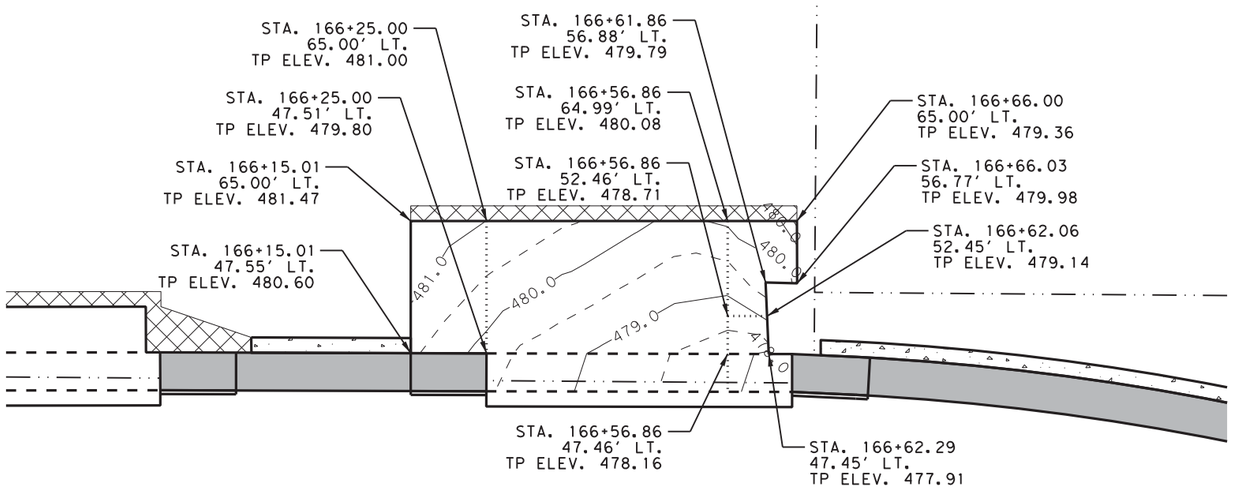

DRIVEWAY 36-02

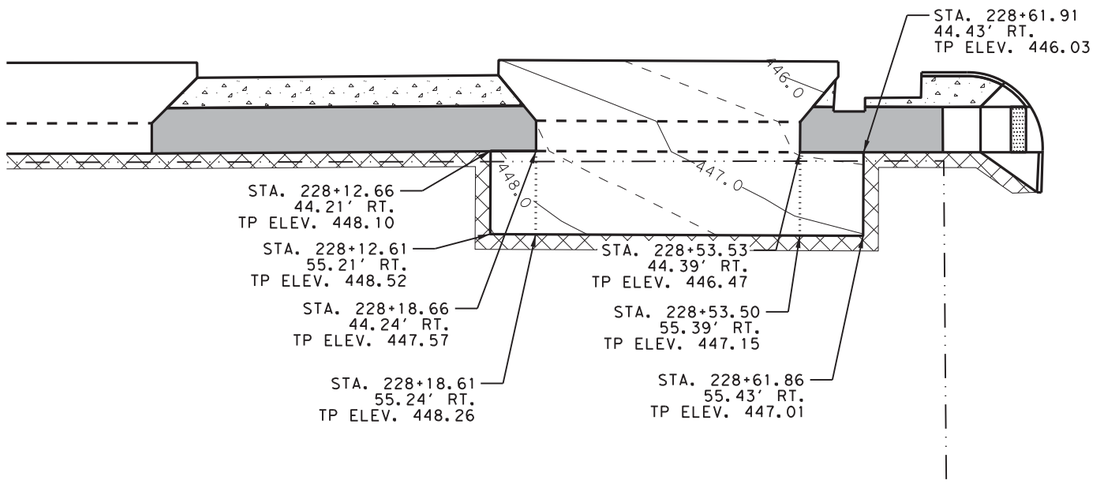

DRIVEWAY 52-06

0' 10' 20'
SCALE

LEGEND

- PROPOSED MAJOR CONTOUR (1.0 FT)
- PROPOSED MINOR CONTOUR (0.5 FT)
- PROPOSED BREAK LINE
- APPROX ROW

NOTES:

1. REFER TO SIDEWALK LAYOUTS, MISCELLANEOUS DETAILS, AND DRIVEWAY DETAILS FOR MORE INFORMATION.
2. ALL STATIONING AND OFFSETS ARE BASED ON ℄ US 84.

12/21/2020

Kimley»Horn F-928

© 2021

Texas Department of Transportation

US 84 TRAFFIC SIGNAL AND SIDEWALK IMPROVEMENTS

DRIVEWAY GRADING LAYOUTS

SHEET 7 OF 7

FED. RD. DIV. NO.	PROJECT ID.	HIGHWAY NO.
6	(SEE TITLE SHEET)	US 84

STATE	DIST.	COUNTY	SHEET NO.
TEXAS	WAC	MCLENNAN	146
CONT.	SECT.	JOB	
0055	15	072	

FILENAME: pw:\\kh-pw.bentley.com:kh-pw-01\Documents\01 Active Projects\TX-FTW-063586010 - US 84 (Waco Drive)\WAC 005515072\4 - Design\Plan Set\3. Roadway\US84_RDW_DRWYGRADE_07.dgn
PLOTTED: 12/21/2020

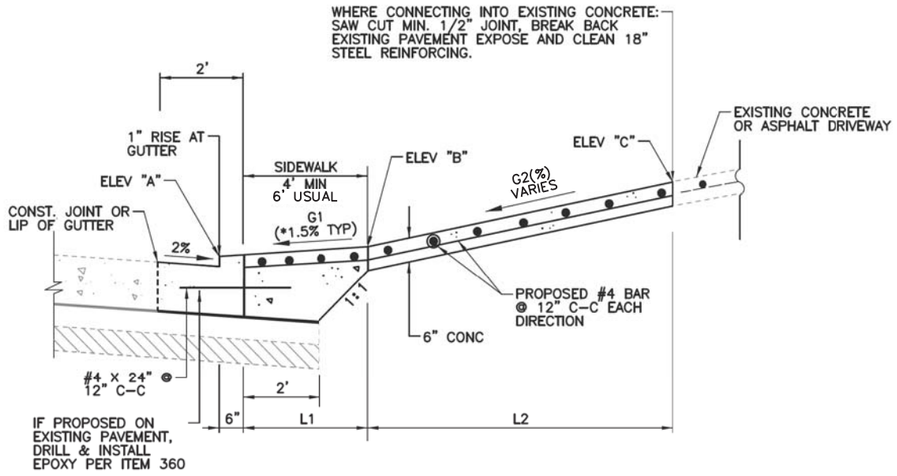

DRIVEWAY SLOPES W/ SIDEWALKS ADJACENT TO CURB
(SECTION A–A)

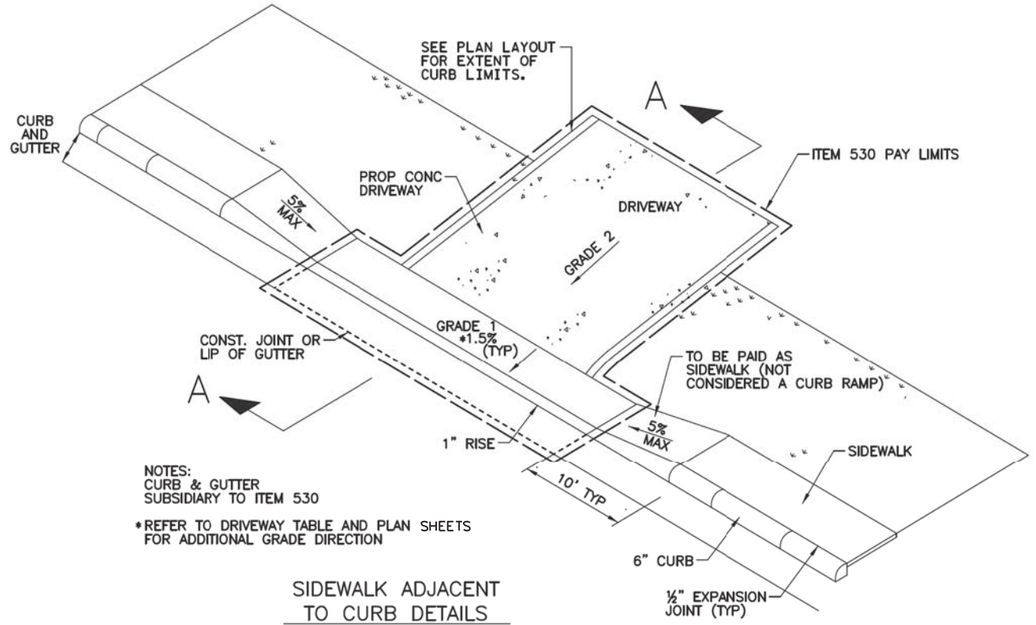

SIDEWALK ADJACENT TO CURB DETAILS

NOTES:

1. REFER TO SIDEWALK LAYOUTS FOR SIDEWALK CROSS SLOPES.
2. REFER TO DRIVEWAY TABLE FOR LENGTH AND GRADES
3. PROPOSED DRIVEWAY GRADES ARE APPROXIMATES, FIELD VERIFY TIE POINTS.
4. CURBS ON DRIVEWAYS SHALL BE CONSIDERED SUBSIDIARY TO THE PRICE BID PER SQUARE YARD FOR DRIVEWAY AND WILL NOT BE PAID FOR DIRECTLY.

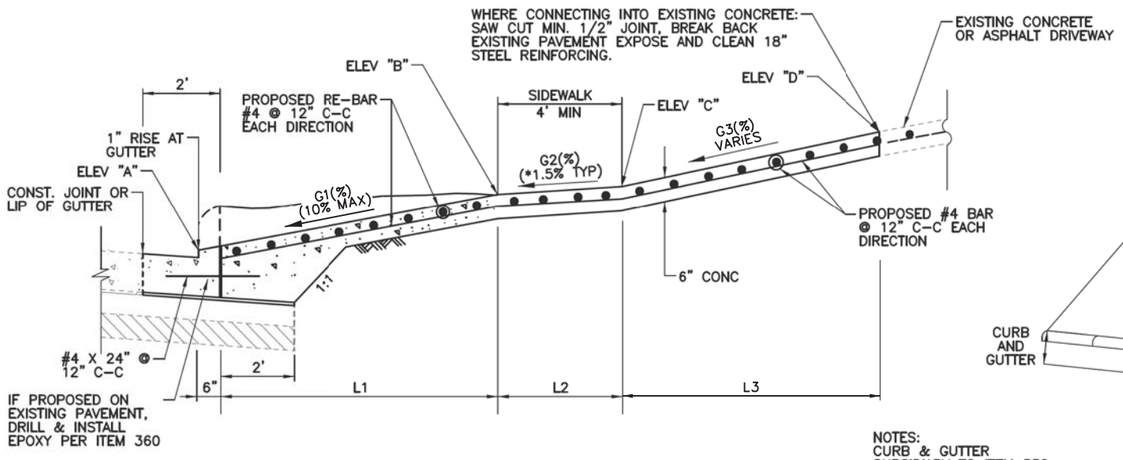

SLOPES W/ SIDEWALKS OFFSET FROM CURB
(SECTION A–A)

NOTES:
CURB & GUTTER SUBSIDIARY TO ITEM 530

*REFER TO DRIVEWAY TABLE AND PLAN SHEET FOR ADDITIONAL GRADE DIRECTION

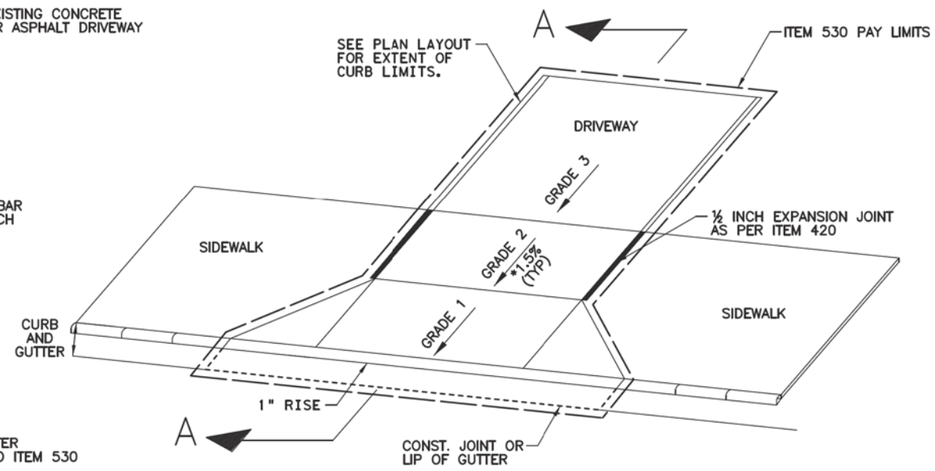

SIDEWALK OFFSET FROM CURB DETAILS

12/21/2020

Kimley»Horn F-928

© 2021

Texas Department of Transportation

DRIVEWAY DETAILS

SCALE: NTS SHEET 1 OF 4

FED.RD. DIV.NO.	PROJECT ID.	HIGHWAY NO.
6	(SEE TITLE SHEET)	US 84

STATE	DIST.	COUNTY	SHEET NO.
TEXAS	WAC	MCLENNAN	147
CONT.	SECT.	JOB	
0055	15	072	

FILENAME: pw:\\kh-pw.bentley.com:kh-pw-01\Documents\01 Active Projects\TX-FTW-063586010 - US 84 (Waco Drive)\WAC 0055150721\4 - Design\Plan Set\3. Roadway\US84_DET01.dgn
PLOTTED: 12/21/2020

DRIVEWAY TABLE												
DRWY ID	DRWY TYPE	ELEV A (FT)	L1 (FT)	G1 (%)	ELEV B (FT)	L2 (FT)	G2 (%)	ELEV C (FT)	L3 (FT)	G3 (%)	ELEV D (FT)	REMARKS
02-01	CONCRETE	588.53	6.00	-1.50	588.43	27.00	-11.96	585.20				
02-02	CONCRETE	589.59	6.00	-1.50	589.50	15.00	-1.30	589.30				
03-01	CONCRETE	586.63	6.00	6.09	587.03	4.00	1.50	587.09				
03-02	CONCRETE	584.95	6.00	5.96	585.33	4.00	1.50	585.39				
04-01	CONCRETE	583.01	6.00	6.33	583.42	4.00	1.50	583.48				
04-02	CONCRETE	580.96	6.00	4.67	581.26	4.00	1.50	581.32				
05-01	CONCRETE	568.82	2.30	8.00	569.05	5.00	1.50	569.12	2.20	2.58	569.18	
05-02	CONCRETE	561.54	3.80	1.50	561.60	5.00	5.24	561.86				
05-03	CONCRETE	570.66	4.00	3.26	570.80	5.00	1.50	570.88				
05-04	CONCRETE	565.96	5.00	7.52	566.38	5.00	1.50	566.45				
05-05	CONCRETE	564.12	5.00	8.12	564.56	5.00	1.50	564.64				
06-01	CONCRETE	558.51	4.40	4.51	558.73	4.00	1.50	558.79				
06-02	CONCRETE	556.99	5.00	1.50	557.08	20.00	11.93	559.46				
06-03	CONCRETE	553.58	5.00	5.00	553.85	6.00	1.50	553.94	12.00	2.64	554.26	
07-01	CONCRETE	547.51	6.00	10.00	548.16	4.00	1.50	548.22	2.00	5.07	548.32	
07-02	CONCRETE	546.27	6.00	7.80	546.77	4.00	1.50	546.83				
07-03	CONCRETE	551.83	5.00	8.00	552.27	6.00	1.50	552.36	11.00	5.71	552.99	
07-04	CONCRETE	547.87	5.00	8.00	548.31	6.00	1.50	548.40	12.00	9.56	549.55	
08-01	CONCRETE	544.16	17.30	-2.79	543.68	5.00	1.50	543.75				
08-02	CONCRETE	544.33	15.20	-0.23	544.29	5.00	1.50	544.37				
09-01	CONCRETE	544.65	14.40	12.00	546.43	5.00	1.50	546.51	24.50	8.94	548.70	
09-02	CONCRETE	546.56	15.70	5.00	547.37	6.00	1.50	547.46	3.00	1.57	547.50	
10-01	CONCRETE	550.37	14.70	5.00	551.13	7.00	1.50	551.24	7.00	3.36	551.47	
10-02	CONCRETE	553.55	8.00	10.00	554.35	5.00	1.50	554.42	16.00	10.03	556.03	
11-01	CONCRETE	555.02	8.57	8.00	555.70	5.00	1.50	555.78	2.00	5.02	555.88	
11-02	CONCRETE	554.01	6.00	1.50	554.11	5.00	-0.19	554.10				
11-03	CONCRETE	555.15	6.00	-1.50	555.05	5.00	-6.24	554.74				
11-04	CONCRETE	555.25	6.00	-1.50	555.15	5.00	-6.29	554.84				
12-01	CONCRETE	555.03	4.50	8.00	555.43	4.00	1.50	555.49	10.00	8.58	556.35	
12-02	CONCRETE	553.80	6.00	-1.50	553.70	6.00	-1.98	553.58				
13-01	CONCRETE	556.52	6.00	2.03	556.65	6.00	-1.50	556.56				
14-01	CONCRETE	558.37	7.00	1.71	558.50	6.00	-1.50	558.41				
15-01	CONCRETE	564.43	14.30	2.69	564.83	5.50	-1.50	564.75	6.10	-7.13	564.31	
15-02	CONCRETE	564.59	5.50	7.86	565.07	6.00	1.50	565.16				
16-01	CONCRETE	564.43	5.00	1.50	564.52	5.00	8.42	564.94				
16-02	CONCRETE	564.38	8.00	13.73	565.55	4.00	1.50	565.61				MEETS OR IMPROVES EXIST DRIVEWAY GRADE
17-01	CONCRETE	561.33	6.00	1.50	561.43	25.00	10.23	563.99				
17-02	CONCRETE	560.82	6.00	1.50	560.92	25.00	11.08	563.69				
17-03	CONCRETE	560.34	6.00	1.50	560.44	25.00	13.06	563.70				MEETS OR IMPROVES EXIST DRIVEWAY GRADE
17-04	CONCRETE	563.38	6.00	3.01	563.58	4.00	1.50	563.64				
17-05	CONCRETE	562.84	6.00	1.80	562.96	4.00	1.50	563.02				
18-01	CONCRETE	560.11	6.00	1.50	560.21	25.00	9.88	562.68				
18-02	CONCRETE	560.50	6.00	1.50	560.60	25.00	11.91	563.58				
18-03	CONCRETE	560.86	6.00	1.50	560.96	28.00	11.99	564.32				
18-04	CONCRETE	561.09	5.00	10.00	561.64	4.00	1.50	561.70	11.00	11.22	562.93	MEETS OR IMPROVES EXIST DRIVEWAY GRADE
18-05	CONCRETE	561.15	5.00	6.93	561.53	4.00	1.50	561.59				
18-06	CONCRETE	561.21	5.00	8.09	561.65	4.00	1.50	561.71				
19-01	CONCRETE	561.25	5.00	10.00	561.80	4.00	1.50	561.86	4.00	11.59	562.32	
19-02	CONCRETE	560.96	5.40	9.37	561.51	4.00	1.50	561.57				
19-03	CONCRETE	560.29	7.00	10.33	561.06	4.00	1.50	561.12				
19-04	CONCRETE	554.94	6.00	1.50	555.03	15.00	11.05	556.69				
19-05	CONCRETE	561.05	6.00	8.20	561.58	4.00	1.50	561.64				
19-06	CONCRETE	555.55	6.00	7.36	556.03	4.00	1.50	556.09				
20-01	CONCRETE	550.58	6.00	1.50	550.68	8.00	10.37	551.51				
20-02	CONCRETE	547.71	6.00	1.50	547.81	3.00	4.64	547.95				
20-03	CONCRETE	552.71	6.00	10.30	553.38	4.00	1.50	553.44				
20-04	CONCRETE	548.89	6.00	7.13	549.35	4.00	1.50	549.41				
21-01	CONCRETE	540.53	6.00	1.50	540.62	21.00	11.94	543.13				
21-02	CONCRETE	539.23	6.00	1.50	539.33	10.00	10.89	540.42				
21-03	CONCRETE	537.78	6.00	1.50	537.88	16.00	13.93	540.10				EXIST BUILDING LIMITS FLATTENING GRADE OF PROPOSED DRIVEWAY
21-04	CONCRETE	540.82	6.00	1.50	540.91	16.00	11.78	542.80				
21-05	CONCRETE	538.22	6.00	1.50	538.32	28.00	14.05	542.26				MEETS OR IMPROVES EXIST DRIVEWAY GRADE
21-06	CONCRETE	536.40	6.00	1.50	536.50	25.00	15.48	540.37				MEETS OR IMPROVES EXIST DRIVEWAY GRADE
22-01	CONCRETE	533.56	6.00	0.78	533.61	4.00	1.50	533.67				
22-02	CONCRETE	534.61	6.00	1.50	534.71	15.00	13.42	536.72				MEETS OR IMPROVES EXIST DRIVEWAY GRADE
22-03	CONCRETE	534.17	6.00	1.50	534.26	34.50	11.79	538.33				
22-04	CONCRETE	533.86	6.00	1.50	533.96	6.00	15.67	534.90				MEETS OR IMPROVES EXIST DRIVEWAY GRADE
23-01	CONCRETE	532.50	6.00	1.50	532.60	10.00	12.97	533.89				MEETS OR IMPROVES EXIST DRIVEWAY GRADE
23-02	CONCRETE	527.45	9.50	1.50	527.60	44.00	11.21	532.53				
23-03	CONCRETE	532.38	7.50	1.50	532.50	3.00	-6.78	532.30				
24-01	CONCRETE	520.32	6.00	1.50	520.41	12.00	16.55	522.40				MEETS OR IMPROVES EXIST DRIVEWAY GRADE
24-02	CONCRETE	515.70	6.00	1.50	515.80	10.00	11.90	516.99				

FILENAME: pw:\\kh-pw.bentley.com:kh-pw-01\Documents\01 Active Projects\TX-FTW-063586010 - US 84 (Waco Drive)\WAC 0055150721\4 - Design\Plan Set\3. Roadway\US84_RDW_DWRY_TBL01
PLOTTED: 12/21/2020

12/21/2020

Kimley»Horn F-928

© 2021

Texas Department of Transportation

DRIVEWAY DETAILS

SHEET 2 OF 4

FED.RD. DIV.NO.	PROJECT ID.	HIGHWAY NO.
6	(SEE TITLE SHEET)	US 84

STATE	DIST.	COUNTY	SHEET NO.
TEXAS	WAC	MCLENNAN	148
CONT.	SECT.	JOB	
0055	15	072	

DRIVEWAY TABLE												
DRWY ID	DRWY TYPE	ELEV A (FT)	L1 (FT)	G1 (%)	ELEV B (FT)	L2 (FT)	G2 (%)	ELEV C (FT)	L3 (FT)	G3 (%)	ELEV D (FT)	REMARKS
24-03	CONCRETE	510.32	6.00	1.50	510.42	6.00	11.05	511.08				
25-01	CONCRETE	506.30	6.00	8.23	506.84	4.00	1.50	506.90				
26-01	CONCRETE	505.91	6.00	8.00	506.43	4.00	1.50	506.49	14.00	11.75	508.13	
26-02	CONCRETE	505.28	5.40	8.48	505.79	4.00	1.50	505.85				
26-03	CONCRETE	505.54	5.40	4.50	505.81	4.00	1.50	505.87				
26-04	CONCRETE	505.55	5.40	9.95	506.14	4.00	1.50	506.20				
27-01	CONCRETE	506.48	4.00	1.50	506.55	12.90	20.42	509.18				EXIST BUILDING LIMITS FLATTENING GRADE OF PROPOSED DRIVEWAY
27-02	CONCRETE	506.71	4.00	1.50	506.78	12.20	18.68	509.06				EXIST BUILDING LIMITS FLATTENING GRADE OF PROPOSED DRIVEWAY TIE DRIVEWAY 0.5' IN FRONT OF BUILDING
27-03	CONCRETE	507.17	4.00	1.50	507.24	17.00	17.64	510.24	8.00	2.00	510.40	MEETS OR IMPROVES EXIST DRIVEWAY GRADE
27-04	CONCRETE	509.76	6.00	1.50	509.86	4.00	1.53	509.92				
28-01	CONCRETE	512.01	6.00	8.00	512.53	4.00	1.50	512.59	10.00	8.47	513.44	
28-02	CONCRETE	512.57	5.50	8.54	513.08	4.00	1.50	513.14				
28-03	CONCRETE	510.47	6.00	1.50	510.57	4.00	3.45	510.70				
29-01	CONCRETE	510.34	6.00	8.00	510.86	4.00	1.50	510.92	7.00	9.93	511.61	
29-02	CONCRETE	510.64	5.00	9.03	511.14	4.00	1.50	511.20				
29-03	CONCRETE	509.87	5.00	6.15	510.21	4.00	1.50	510.27				
29-04	CONCRETE	507.96	5.50	7.23	508.39	4.00	1.50	508.45				
30-01	CONCRETE	495.43	6.00	5.78	495.81	4.00	1.50	495.87				
30-02	CONCRETE	490.98	6.00	7.40	491.46	4.00	1.50	491.52				
31-01	CONCRETE	487.43	5.30	6.86	487.83	5.00	1.50	487.91				
31-02	CONCRETE	481.41	6.00	8.00	481.93	4.00	1.50	481.99	12.00	11.46	483.37	
32-01	CONCRETE	479.48	6.00	8.00	480.00	4.00	1.50	480.06	13.00	11.92	481.61	
32-02	CONCRETE	472.83	10.00	10.75	473.96	4.00	1.50	474.02				
33-01	CONCRETE	471.13	6.00	8.56	471.69	4.00	1.50	471.75				
34-01	CONCRETE	473.44	6.00	10.00	474.09	4.00	1.50	474.15	8.00	8.71	474.85	
34-02	CONCRETE	476.03	6.00	11.71	476.79	4.00	1.50	476.85				MEETS OR IMPROVES EXIST DRIVEWAY GRADE
34-03	CONCRETE	478.83	6.00	10.40	479.51	4.00	1.50	479.57				MEETS OR IMPROVES EXIST DRIVEWAY GRADE
34-04	CONCRETE	471.98	6.00	9.06	472.57	4.00	1.50	472.63				
34-05	CONCRETE	474.54	6.00	3.87	474.79	4.00	1.50	474.85				
34-06	CONCRETE	476.27	6.00	6.90	476.72	4.00	1.50	476.78				
35-01	CONCRETE	484.03	6.00	8.00	484.55	4.00	1.50	484.61	7.00	10.38	485.34	
35-02	CONCRETE	484.52	6.00	8.00	485.04	4.00	1.50	485.10	8.00	11.45	486.02	
35-03	CONCRETE	484.83	6.00	8.00	485.35	4.00	1.50	485.41	6.00	11.31	486.09	
35-04	CONCRETE	485.03	6.00	9.43	485.65	4.00	1.50	485.71				
35-05	CONCRETE	482.61	6.00	4.41	482.90	4.00	1.50	482.96				
35-06	CONCRETE	483.94	6.00	8.41	484.48	4.00	1.50	484.54				
35-07	CONCRETE	484.40	6.00	6.65	484.83	4.00	1.50	484.89				
35-08	CONCRETE	484.66	6.00	6.61	485.09	4.00	1.50	485.15				
35-09	CONCRETE	484.73	6.00	8.50	485.28	4.00	1.50	485.34				
35-10	CONCRETE	484.92	6.00	6.89	485.37	4.00	1.50	485.43				
35-11	CONCRETE	483.95	9.50	8.40	484.79							
36-01	CONCRETE	482.48	5.00	1.50	482.56	6.00	7.29	483.00				
36-02	CONCRETE	478.71	5.00	1.50	478.79	13.00	11.36	480.27				
36-03	CONCRETE	471.42	8.00	5.14	471.86	4.00	1.50	471.92				
36-04	CONCRETE	482.97	6.00	6.07	483.36	4.00	1.50	483.42				
36-05	CONCRETE	479.28	6.00	3.84	479.53	4.00	1.50	479.59				
36-06	CONCRETE	475.88	6.00	6.54	476.31	4.00	1.50	476.37				
37-01	CONCRETE	466.51	4.00	8.50	466.89	4.00	1.50	466.95				
37-02	CONCRETE	464.86	4.00	3.48	465.02	6.00	1.50	465.11				
37-03	CONCRETE	465.20	4.00	2.59	465.32	6.00	1.50	465.41				
40-01	CONCRETE	473.38	6.00	5.73	473.75	4.00	1.50	473.81				
40-02	CONCRETE	472.59	6.00	4.69	472.89	4.00	1.50	472.95				
40-03	CONCRETE	468.68	6.00	3.66	468.92	4.00	1.50	468.98				
41-01	CONCRETE	467.00	6.00	1.86	467.12	4.00	1.50	467.18				
41-02	CONCRETE	466.78	6.00	0.71	466.82	4.00	1.50	466.88				
43-01	CONCRETE	467.86	6.00	5.40	468.21	4.00	1.50	468.27				
43-02	CONCRETE	468.30	6.00	3.80	468.54	4.00	1.50	468.60				
44-01	CONCRETE	471.08	6.00	9.63	471.70	4.00	1.50	471.76				
44-02	CONCRETE	470.05	6.00	6.18	470.46	5.00	1.50	470.53				
47-01	CONCRETE	475.56	6.00	5.18	475.90	4.00	1.50	475.96				
47-02	CONCRETE	474.89	6.00	4.02	475.15	4.00	1.50	475.21				
49-01	CONCRETE	470.80	6.00	9.66	471.43	4.00	1.50	471.49				
50-01	CONCRETE	476.20	6.00	1.15	476.27	4.00	1.50	476.33				
50-02	CONCRETE	473.06	6.00	7.61	473.55	4.00	1.50	473.61				
51-01	CONCRETE	475.98	6.00	5.57	476.34	4.00	1.50	476.40				
51-02	CONCRETE	475.05	6.00	2.06	475.18	4.00	1.50	475.24				
51-03	CONCRETE	473.57	6.00	4.69	473.87	4.00	1.50	473.93				
51-04	CONCRETE	466.57	6.00	8.25	467.10	4.00	1.50	467.16				
51-05	CONCRETE	475.55	6.00	8.56	476.11	4.00	1.50	476.17				
51-06	CONCRETE	467.63	6.00	1.46	467.72	4.00	1.50	467.78				
52-01	CONCRETE	454.00	6.00	10.32	454.67	4.00	1.50	454.73				

FILENAME: pw:\\kh-pw.bentley.com:kh-pw-01\Documents\01 Active Projects\TX-FTW-063586010 - US 84 (Waco Drive)\WAC 0055150721\4 - Design\Plan Set\3. Roadway\US84_RDW_DWRY_TBL02
PLOTTED: 12/21/2020

12/21/2020

Kimley»Horn F-928

© 2021

Texas Department of Transportation

DRIVEWAY DETAILS

SHEET 3 OF 4

FED.RD. DIV.NO.	PROJECT ID.	HIGHWAY NO.
6	(SEE TITLE SHEET)	US 84

STATE	DIST.	COUNTY	SHEET NO.
TEXAS	WAC	MCLENNAN	149
CONT.	SECT.	JOB	
0055	15	072	

DRIVEWAY TABLE												
DRWY ID	DRWY TYPE	ELEV A (FT)	L1 (FT)	G1 (%)	ELEV B (FT)	L2 (FT)	G2 (%)	ELEV C (FT)	L3 (FT)	G3 (%)	ELEV D (FT)	REMARKS
52-02	CONCRETE	464.96	6.00	3.66	465.20	4.00	1.50	465.26				
52-03	CONCRETE	454.93	5.50	4.61	455.21	4.00	1.50	455.27				
53-01	CONCRETE	452.04	6.00	12.55	452.85	4.00	1.50	452.91				MEETS OR IMPROVES EXIST DRIVEWAY GRADE
53-02	CONCRETE	451.01	3.00	2.00	451.08	6.00	1.50	451.17	5.00	0.61	451.20	
53-03	CONCRETE	453.04	6.00	3.01	453.23	4.00	1.50	453.29				
53-04	CONCRETE	450.97	6.00	4.96	451.29	4.00	1.50	451.35				
53-05	CONCRETE	449.35	6.00	8.09	449.87	4.00	1.50	449.93				
53-06	CONCRETE	446.57	6.00	8.00	447.09	4.00	1.50	447.15	6.00	7.13	447.57	
54-01	CONCRETE	440.10	6.00	9.33	440.71	4.00	1.50	440.77				
54-02	CONCRETE	439.86	6.00	7.83	440.37	4.00	1.50	440.43				
54-03	CONCRETE	439.67	6.00	5.93	440.05	4.00	1.50	440.11				
55-01	CONCRETE	435.46	6.00	8.00	435.98	4.00	1.50	436.04	9.00	12.00	437.12	
56-01	CONCRETE	418.77	6.00	7.15	419.24	4.00	1.50	419.30				
56-02	CONCRETE	424.47	6.00	10.00	425.12	4.00	1.50	425.18	4.00	5.79	425.41	
56-03	CONCRETE	429.15	6.00	0.56	429.19	4.00	1.50	429.25				
57-01	CONCRETE	416.02	8.00	5.73	416.50	6.00	1.50	416.59				
58-01	CONCRETE	427.29	6.00	1.50	427.39	15.00	11.24	429.07				
59-01	CONCRETE	431.41	6.00	7.73	431.92	4.00	1.50	431.98				
59-02	CONCRETE	434.09	6.00	5.12	434.43	4.00	1.50	434.49				
59-03	CONCRETE	434.73	6.00	7.36	435.21	4.00	1.50	435.27				
59-04	CONCRETE	434.82	6.00	7.89	435.34	4.00	1.50	435.40				
59-05	CONCRETE	434.05	6.00	7.56	434.54	4.00	1.50	434.60				
59-06	CONCRETE	434.69	6.00	5.87	435.07	4.00	1.50	435.13				
60-01	CONCRETE	434.81	6.00	1.40	434.90	4.00	1.50	434.96				
61-01	CONCRETE	424.21	6.00	8.51	424.77	4.00	1.50	424.83				
61-02	HES CONCRETE	424.65	6.00	5.68	425.02	4.00	1.50	425.08				
62-01	CONCRETE	408.02	6.00	1.50	408.11	27.00	16.10	412.46				MEETS OR IMPROVES EXIST DRIVEWAY GRADE
65-01	CONCRETE	394.61	6.00	6.36	395.02	4.00	1.50	395.08				
65-02	CONCRETE	395.31	6.00	6.75	395.75	4.00	1.50	395.81				
65-03	CONCRETE	395.58	6.00	6.69	396.02	4.00	1.50	396.08				
65-04	CONCRETE	395.88	6.00	6.36	396.29	4.00	1.50	396.35				
65-05	CONCRETE	395.94	6.00	6.89	396.39	4.00	1.50	396.45				
66-01	CONCRETE	396.31	6.00	5.40	396.66	4.00	1.50	396.72				
66-02	CONCRETE	396.51	6.00	5.03	396.84	4.00	1.50	396.90				
66-03	CONCRETE	396.47	6.00	2.96	396.66	4.00	1.50	396.72				
67-01	CONCRETE	395.64	6.00	9.79	396.28	4.00	1.50	396.34				
67-02	CONCRETE	395.41	6.00	8.57	395.97	4.00	1.50	396.03				
67-03	CONCRETE	395.62	6.00	8.56	396.18	4.00	1.50	396.24				
67-04	CONCRETE	395.56	6.00	10.27	396.23	4.00	1.50	396.29				
67-05	CONCRETE	395.46	6.00	9.03	396.05	4.00	1.50	396.11				
67-06	CONCRETE	395.55	6.00	6.56	395.98	4.00	1.50	396.04				
69-01	CONCRETE	406.02	9.00	5.72	406.57	4.00	1.50	406.63				
70-01	CONCRETE	408.16	9.00	6.21	408.75	4.00	1.50	408.81				
70-02	CONCRETE	409.49	6.00	9.28	410.10	4.00	1.50	410.16				
70-03	CONCRETE	410.57	6.00	7.02	411.02	4.00	1.50	411.08				
70-04	CONCRETE	411.31	6.00	6.04	411.70	4.00	1.50	411.76				
73-01	CONCRETE	409.48	9.00	5.44	410.00	4.00	1.50	410.06				
73-02	CONCRETE	409.78	9.00	4.28	410.19	4.00	1.50	410.25				

FILENAME: pw:\\kh-pw.bentley.com:kh-pw-01\Documents\01 Active Projects\TX-FTW-063586010 - US 84 (Waco Drive)\WAC 0055150721\4 - Design\Plan Set\3. Roadway\US84_RDW_DWRY_TBL03
PLOTTED: 12/21/2020

12/21/2020

Kimley»Horn F-928

© 2021

Texas Department of Transportation

DRIVEWAY DETAILS

SHEET 4 OF 4

FED. RD. DIV. NO.	PROJECT ID.	HIGHWAY NO.
6	(SEE TITLE SHEET)	US 84

STATE	DIST.	COUNTY	SHEET NO.
TEXAS	WAC	MCLENNAN	150
CONT.	SECT.	JOB	
0055	15	072	

INTERSECTION RECONSTRUCTION SUMMARY					
		104	105	340	360
		6001	6037	6011	6003
INTERSECTION	QUADRANT	REMOVING CONC (PAV)	REMOVING STAB BASE AND ASPH PAV(0"-16")	D-GR HMA(SQ) TY-B PG64-22	CONC PVMT (CONT REINF - CRCP) (9")
		SY	SY	TON	SY
AUSTIN AVE	SOUTH	13	1	4	16
N 40TH ST	EAST	13	1	4	16
N 39TH ST	EAST	11	1	4	14
N 37TH ST	WEST	10	1	3	12
N 35TH ST	NORTH	13	1	4	16
ORIENTAL RD	SOUTH	12	1	4	15
N 30TH ST	EAST	15	1	5	18
N 29TH ST	NORTH	13	1	4	16
N 27TH ST	EAST	12	2	4	15
N 26TH ST	NORTH	10	1	4	13
N 25TH ST	EAST	13	1	4	16
N 24TH ST	NORTH	18	7	6	22
N 23RD ST	EAST	12	3	4	15
N 21ST ST	WEST	10	1	4	13
N 18TH ST	WEST	12	0	4	15
	EAST	10	2	3	12
N 16TH ST	WEST	10	0	3	12
	SOUTH	10	0	3	12
	EAST	7	1	2	8
N 15TH ST	WEST	11	1	4	14
	EAST	40	19	12	50
N 13TH ST	SOUTH	28	4	9	35
N 12TH ST	NORTH	13	0	4	16
	EAST	13	1	4	16
	SOUTH	13	1	4	16
N 11TH ST	WEST	11	1	4	13
	NORTH	13	2	4	16
N 4TH ST	EAST	21	2	7	26
HUBERT ST	NORTH	19	2	6	24
FM 933	WEST	23	1	7	28
	SOUTH	21	2	7	26
	EAST	14	1	5	18
TOTALS		464	63	150	574

NOTES:

1. CONTRACTOR TO MAINTAIN CURB INLET DEPRESSION WHEN RECONSTRUCTING CURB AND / OR PAVEMENT ADJACENT TO EXISTING CURB INLETS.
2. REFER TO CCCG STANDARD FOR CURB CONSTRUCTION DETAILS.

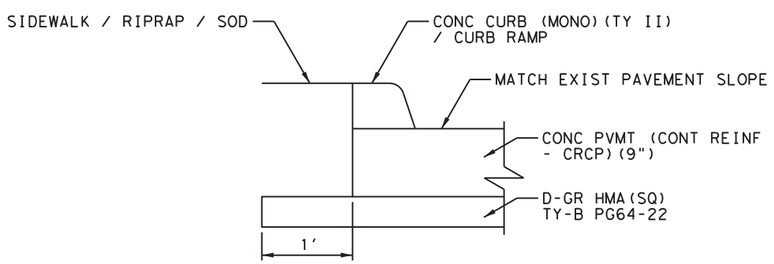

SECTION A-A
NTS

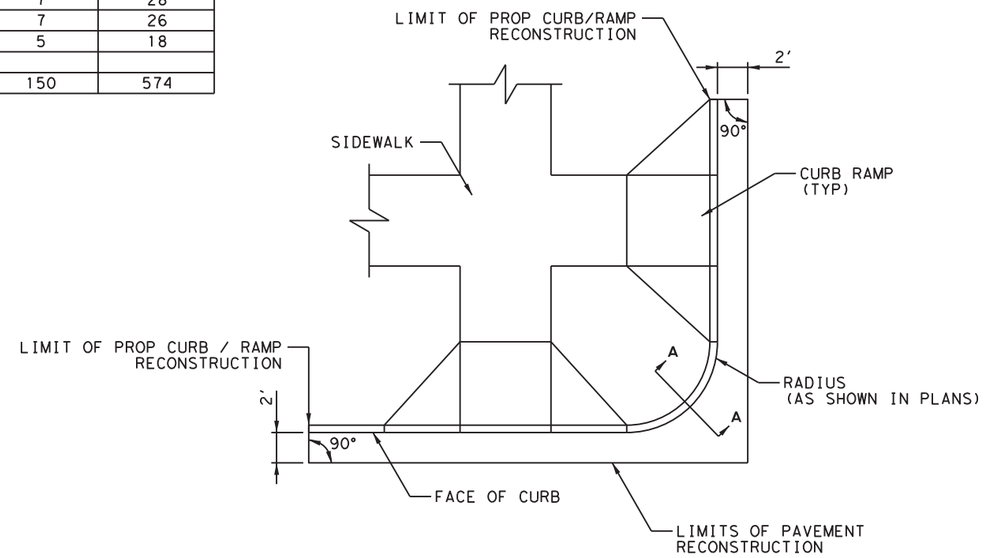

INTERSECTION RECONSTRUCTION (PLAN)
NTS

12/21/2020

Kimley»Horn F-928

© 2021

Texas Department of Transportation

INTERSECTION RECONSTRUCTION DETAILS

FED. RD. DIV. NO.	PROJECT ID.	HIGHWAY NO.
6	(SEE TITLE SHEET)	US 84

STATE	DIST.	COUNTY	SHEET NO.
TEXAS	WAC	MCLENNAN	151
CONT.	SECT.	JOB	
0055	15	072	

FILENAME: pw:\\kh-pw.bentley.com:kh-pw-01\Documents\01 Active Projects\TX-FTW-063586010 - US 84 (Waco Drive)\WAC 0055150721\4 - Design\Plan Set\3. Roadway\US84_DET_INT01.dgn
PLOTTED: 12/21/2020

FILENAME: pw:\\kh-pw.bentley.com:kh-pw-01\Documents\01 Active Projects\TX-FTW-063586010 - US 84 (Waco Drive)\WAC 005515072\4 - Design\Plan Set\3. Roadway\US84_DET02.dgn
PLOTTED: 12/21/2020

OBSTRUCTION CONFLICT

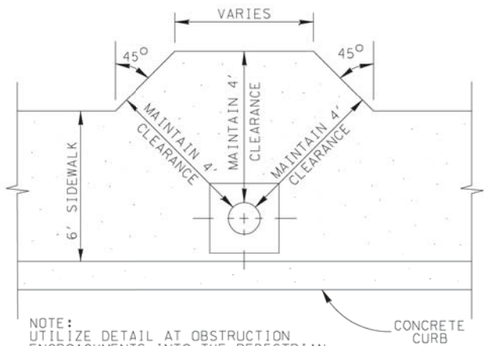

NOTE:
UTILIZE DETAIL AT OBSTRUCTION ENCROACHMENTS INTO THE PEDESTRIAN ACCESS ROUTE. A MINIMUM UNOBSTRUCTED CLEARANCE OF 4' SHOULD BE MAINTAINED AROUND THE OBSTRUCTION OR AS APPROVED BY THE ENGINEER.

RIPRAP DETAIL

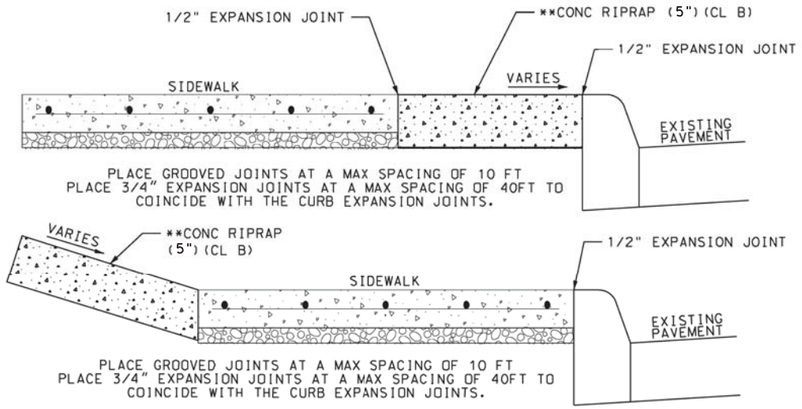

** CONTRACTOR TO USE NO. 4 REINFORCING BARS AS SPECIFIED IN ITEM 432. CONTRACTOR MAY USE HIGHER STRENGTH CLASS A CONCRETE IN LIEU OF CLASS B.

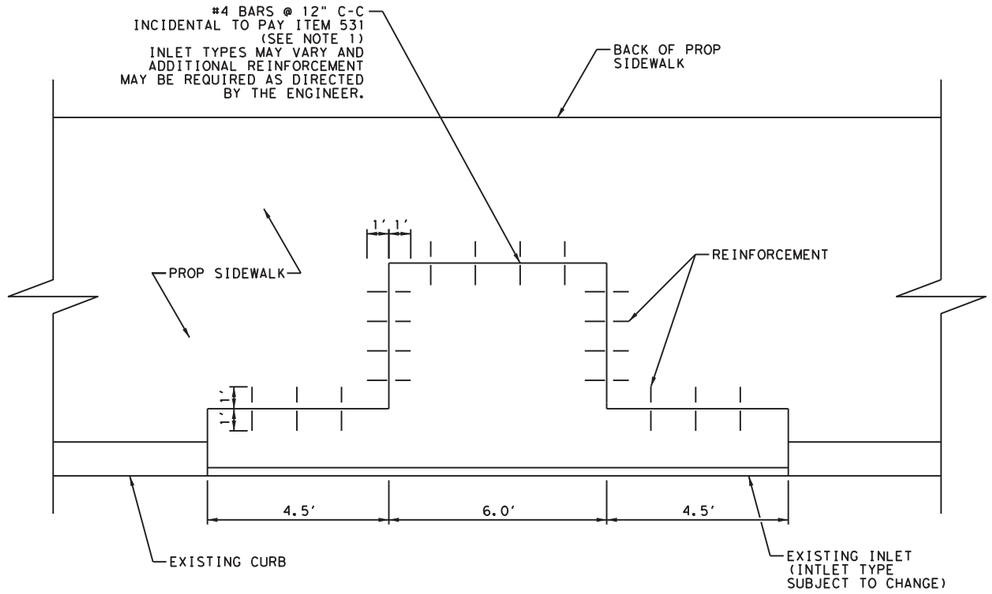

INLET DOWELING DETAIL

NOT TO SCALE

NOTE:

1. CONTRACTOR RESPONSIBLE TO REPAIR AND/OR REPLACE ANY DAMAGE TO EXISTING INLET AS REQUIRED BY THE ENGINEER

12/21/2020

Kimley»Horn F-928

© 2021

Texas Department of Transportation

MISCELLANEOUS DETAILS

SCALE: NTS SHEET 1 OF 13

FED. RD. DIV. NO.	PROJECT ID.	HIGHWAY NO.
6	(SEE TITLE SHEET)	US 84

STATE	DIST.	COUNTY	SHEET NO.
TEXAS	WAC	MCLENNAN	
CONT.	SECT.	JOB	152
0055	15	072	

RETAINING WALL DETAIL

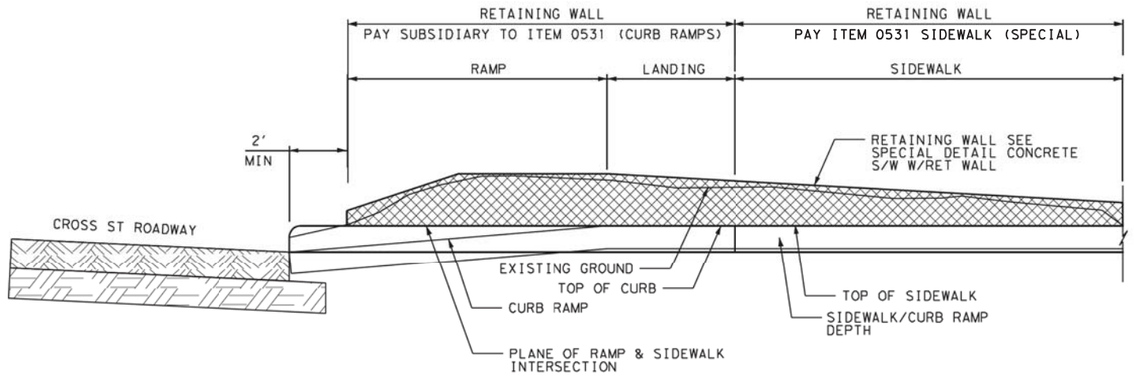

BOLLARD DETAIL

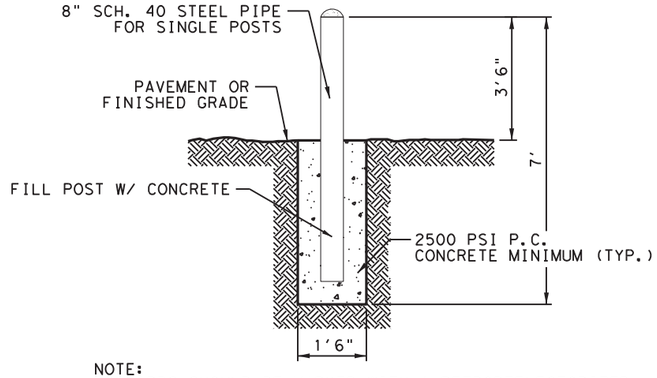

NOTE:
BOLLARDS SHOULD BE MARKED WITH A RETROREFLECTORIZED MATERIAL ON BOTH SIDES OR WITH APPROPRIATE OBJECT MARKERS, PER SECTION 9B.26 OF THE MUTCD(7).

TYPICAL TRANSITION FOR CONCRETE CURB ENDS

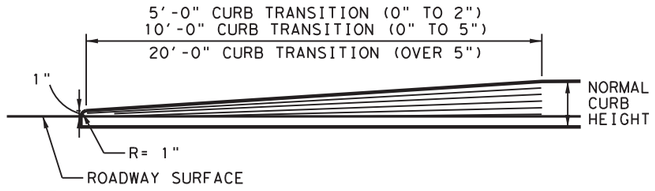

NOTE:

TRANSITIONS FOR CONCRETE CURB ENDS WILL NOT BE PAID FOR DIRECTLY BUT SHALL BE CONSIDERED SUBSIDIARY TO ITEM 529.

CONCRETE BREAKBACK DETAIL

NOT TO SCALE

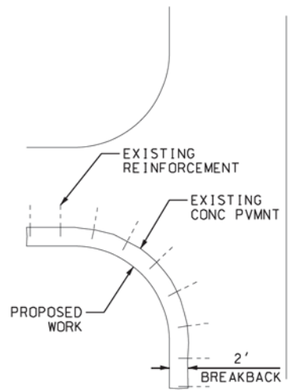

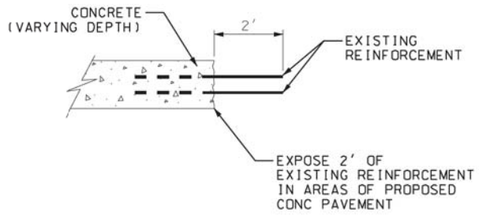

* WORK ASSOCIATED WITH THE ABOVE WORK IS NOT PAID FOR SEPARATELY BUT IS SUBSIDIARY TO ITEM 360

12/21/2020

Kimley»Horn F-928

© 2021

Texas Department of Transportation

MISCELLANEOUS DETAILS

SCALE: NTS SHEET 2 OF 13

FED.RD. DIV.NO.	PROJECT ID.	HIGHWAY NO.
6	(SEE TITLE SHEET)	US 84

STATE	DIST.	COUNTY	SHEET NO.
TEXAS	WAC	MCLENNAN	153
CONT.	SECT.	JOB	
0055	15	072	

FILENAME: pw:\\kh-pw.bentley.com:kh-pw-01\Documents\01 Active Projects\TX-FTW-063586010 - US 84 (Waco Drive)\WAC 005515072\4 - Design\Plan Set\3. Roadway\US84_DET03.dgn
PLOTTED: 12/21/2020

ROADWAY TRANSITION

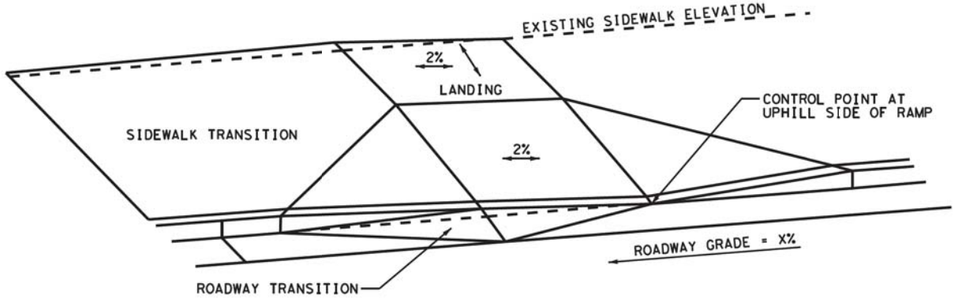

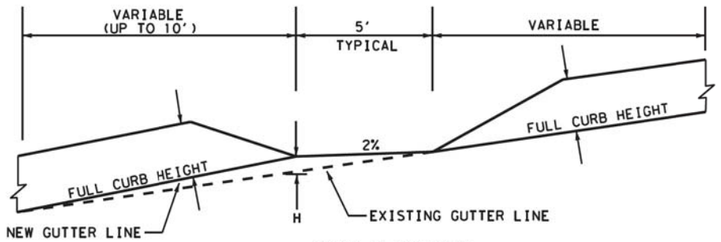

CURB ELEVATION
N.T.S.

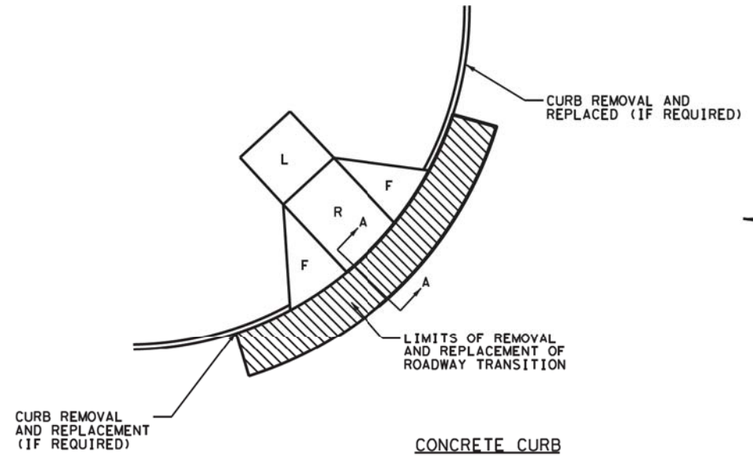

CONCRETE CURB

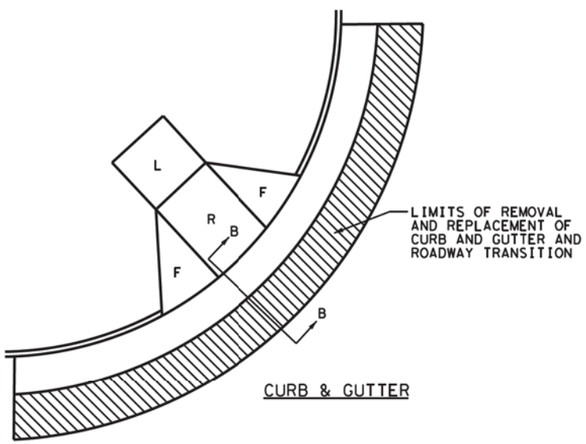

CURB & GUTTER

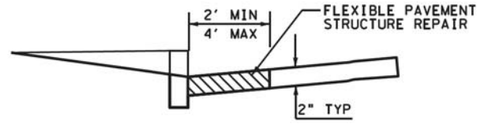

SECTION A-A

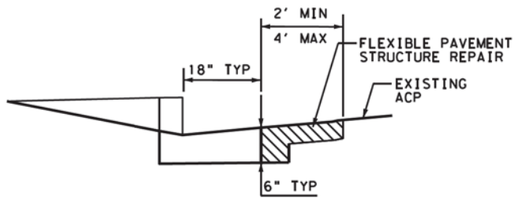

SECTION B-B

GRADE DIFFERENTIAL BETWEEN CURB RAMP CROSS SLOPE AND ROADWAY GRADE	*H
1%	0.04' (1/2")
2%	0.08' (1")
3%	0.12' (1 1/2")
4%	0.16' (2")
5%	0.20' (2 1/2")

*H = DIFFERENCE IN ELEVATION BETWEEN THE NEW GUTTER LINE AND EXISTING GUTTER LINE

NOTES:

1. UTILIZE ROADWAY TRANSITION TO TIE CROSS SLOPE OF NEWLY CONSTRUCTED CURB RAMP TO THE EXISTING ROADWAY GRADE. ROADWAY TRANSITIONS SHOULD NOT EXTEND MORE THAN 4 FEET INTO ROADWAY.
2. FOR CURB SECTION, REMOVE A 2 FOOT WIDE (MIN.) BY 2 INCH DEEP SECTION OF PAVEMENT THE LENGTH OF THE TRANSITION PRIOR TO CONSTRUCTION.
3. FOR CURB AND GUTTER SECTION, REMOVE CURB, GUTTER AND IF NECESSARY A SECTION OF PAVEMENT (24 INCHES MIN.) BEYOND THE GUTTER BY 6 INCHES DEEP. CONSTRUCT TRANSITION IN THE GUTTER SECTION AS SHOWN.
4. CONSTRUCT FULL HEIGHT CURB AND CURB RAMP FLARES (IF REQUIRED) BASED ON NEW GUTTER LINE ELEVATIONS.
5. CONSTRUCT TRANSITION FROM BOTTOM OF CURB RAMP TO ROADWAY WITH HOT-MIX ASPHALT CONCRETE AS PER PLANS AND SPECIFICATION OR AS DIRECTED.
6. TRAFFIC SIGNAL LOOP DETECTORS MAY EXIST WITHIN THE ROADWAY CONSTRUCTION TRANSITION ZONE. MAINTAIN OPERATION OF LOOP DETECTORS THROUGHOUT CONSTRUCTION. REPAIR OR REPLACE ANY LOOP DETECTORS DAMAGED DURING CONSTRUCTION OPERATIONS.

FILENAME: pw:\\kh-pw.bentley.com:kh-pw-01\Documents\01 Active Projects\TX-FTW-063586010 - US 84 (Waco Drive)\WAC 005515072\4 - Design\Plan Set\3. Roadway\US84_DET04.dgn
PLOTTED: 12/21/2020

12/21/2020

Kimley»Horn F-928

© 2021

Texas Department of Transportation

MISCELLANEOUS DETAILS

SCALE: NTS SHEET 3 OF 13

FED. RD. DIV. NO.	PROJECT ID.	HIGHWAY NO.
6	(SEE TITLE SHEET)	US 84

STATE	DIST.	COUNTY	SHEET NO.
TEXAS	WAC	MCLENNAN	154
CONT.	SECT.	JOB	
0055	15	072	

CONCRETE SIDEWALK DRAIN DETAIL

N.T.S.

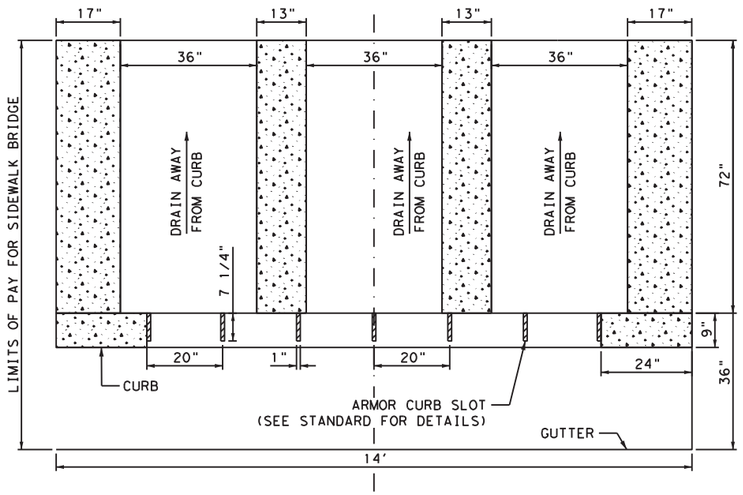

ARMOR CURB SLOT DETAIL

N.T.S.

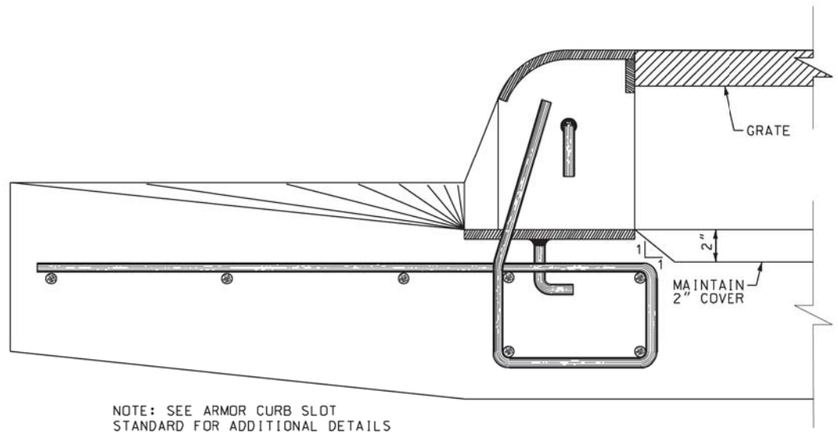

NOTE: SEE ARMOR CURB SLOT STANDARD FOR ADDITIONAL DETAILS

SIDEWALK CURB DRAIN TY 1

(SIDEWALK BRIDGE) ITEM 531-6059

N.T.S.

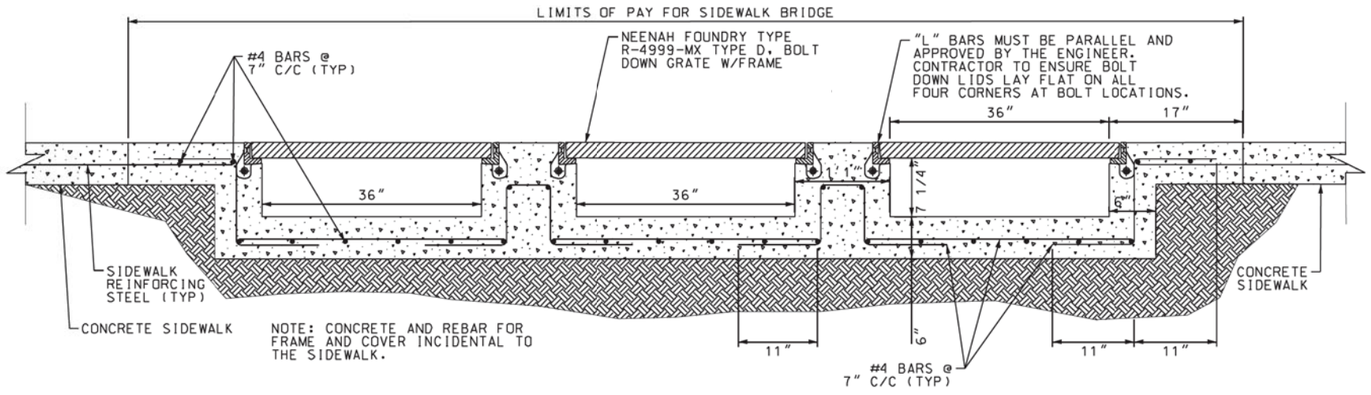

NOTE: CONCRETE AND REBAR FOR FRAME AND COVER INCIDENTAL TO THE SIDEWALK.

12/21/2020

Kimley»Horn F-928

© 2021

Texas Department of Transportation

MISCELLANEOUS DETAILS

SCALE: NTS SHEET 4 OF 13

FED. RD. DIV. NO.	PROJECT ID.	HIGHWAY NO.
6	(SEE TITLE SHEET)	US 84

STATE	DIST.	COUNTY	SHEET NO.
TEXAS	WAC	MCLENNAN	155
CONT.	SECT.	JOB	
0055	15	072	

FILENAME: pw:\\kh-pw.bentley.com:kh-pw-01\Documents\01 Active Projects\TX-FTW-063586010 - US 84 (Waco Drive)\WAC 005515072\4 - Design\Plan Set\3. Roadway\US84_DET05.dgn
PLOTTED: 12/21/2020

CONCRETE FLUME DETAIL

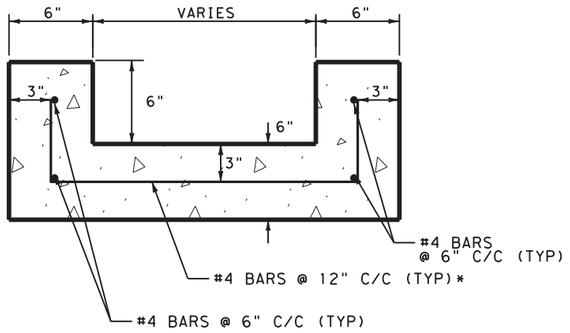

SIDEWALK CURB DRAIN TY 2

N.T.S

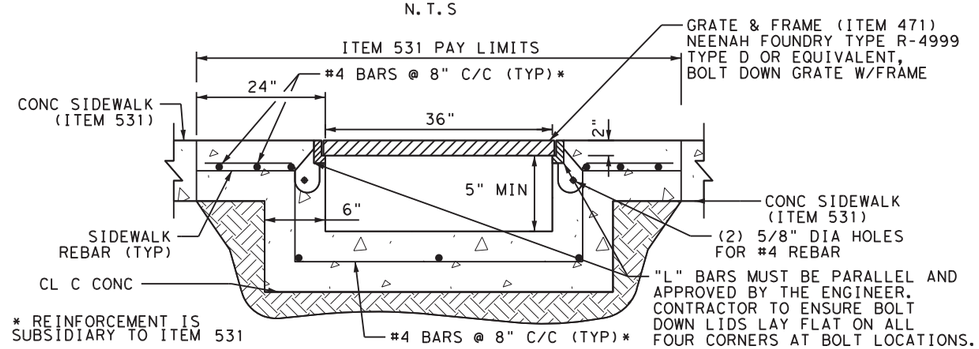

NOTES:

1. REINFORCING BARS FOR SIDEWALKS AND CURB RAMPS SHALL BE #4 @ 18" C-C, GRADE 40 WITH LAP SPLICES 40 BAR DIAMETERS LONG. WELDED WIRE REINFORCEMENT (WWR) SHALL BE 6x6-#6 WIRE MESH.
2. REMOVAL OF EXISTING CONCRETE IS CONSIDERED SUBSIDIARY TO SIDEWALK AND/OR CURB RAMP PER ITEM 531 "SIDEWALKS".

CURB RAMPS

ALL CURB RAMPS ARE TO BE 6" IN THICKNESS
UNLESS OTHERWISE SHOWN

SPOT REPAIR DETAIL

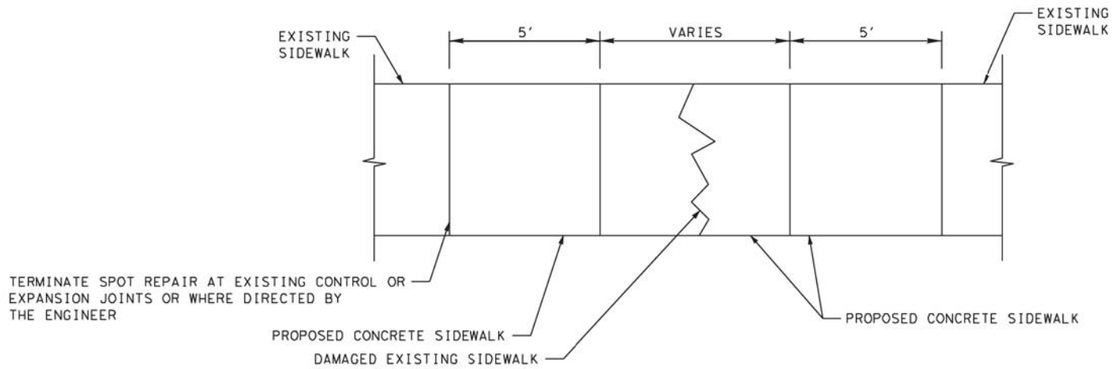

NOTE: SPOT REPAIR LOCATIONS ARE TO BE DETERMINED BY THE ENGINEER.
PAYMENT FOR SPOT REPAIR IS INCLUDED UNDER ITEM 531,

12/21/2020

Kimley»Horn F-928

© 2021

Texas Department of Transportation

MISCELLANEOUS DETAILS

SCALE: NTS SHEET 5 OF 13

FED.RD. DIV.NO.	PROJECT ID.	HIGHWAY NO.
6	(SEE TITLE SHEET)	US 84

STATE	DIST.	COUNTY	SHEET NO.
TEXAS	WAC	MCLENNAN	156
CONT.	SECT.	JOB	
0055	15	072	

FILENAME: pw:\\kh-pw.bentley.com:kh-pw-01\Documents\01 Active Projects\TX-FTW-063586010 - US 84 (Waco Drive)\WAC 005515072\4 - Design\Plan Set\3. Roadway\US84_DET06.dgn
PLOTTED: 12/21/2020

CONCRETE COLLAR DETAIL

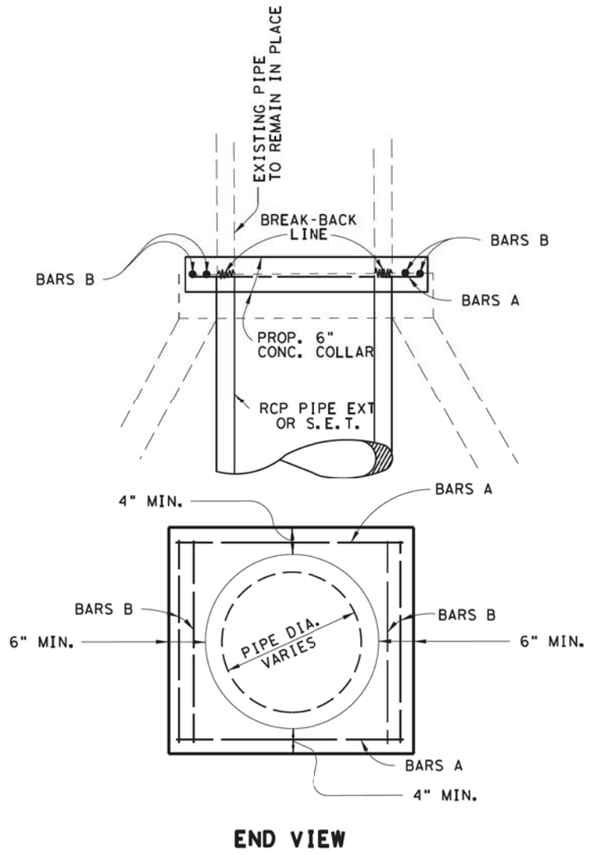

END VIEW

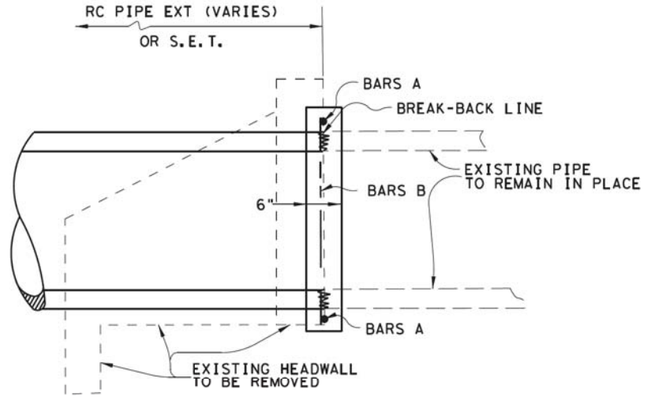

LONGITUDINAL ELEVATION

NOTE:

A CL A CONCRETE COLLAR SHALL BE USED AT LOCATIONS AS SHOWN ON THE PLANS WHERE ONLY THE EXISTING HEADWALL OR LESS THAN A FULL JOINT OF PIPE IS TO BE REMOVED PRIOR TO THE INSTALLATION OF THE CULVERT EXTENSION. A CONCRETE COLLAR SHALL BE USED AT LOCATIONS WHERE AN EXISTING METAL PIPE CULVERT IS BEING EXTENDED WITH R.C. PIPE OR A SAFETY END TREATMENT. A CONCRETE COLLAR SHALL BE USED AT ALL 15, 30, & 45 DEGREE PIPE BEND JOINT CONNECTIONS.
REINFORCING STEEL (BARS A & B) SHALL BE #4 BARS CUT IN THE FIELD TO FIT. CONCRETE COLLAR SHALL CONFORM TO INSIDE DIAMETER OF PIPE CULVERTS.

TOWNE OAKS HMA PAVEMENT SECTION

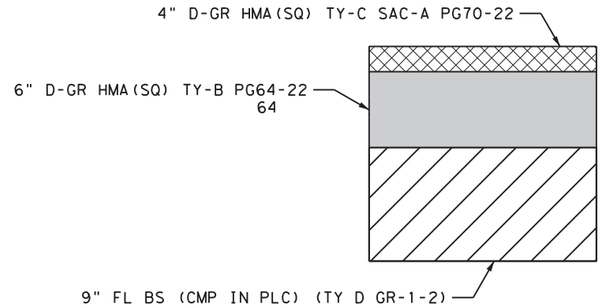

CURB AND GUTTER HMA DETAIL

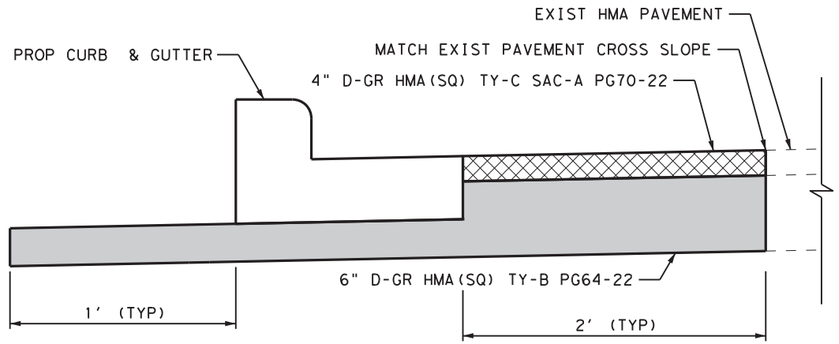

DRIVEWAY HMA DETAIL

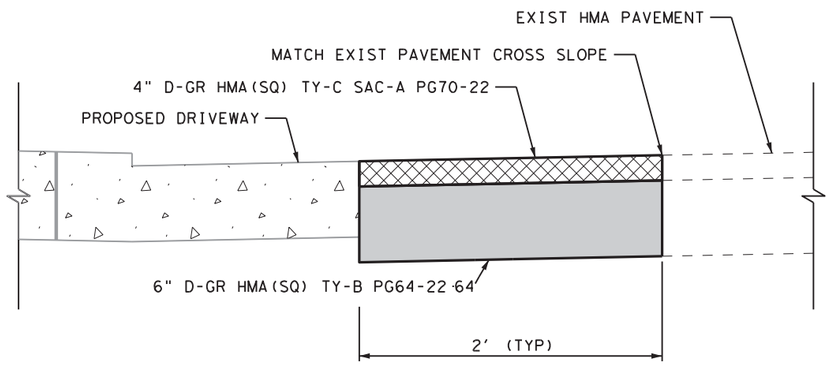

SIDEWALK HMA DETAIL

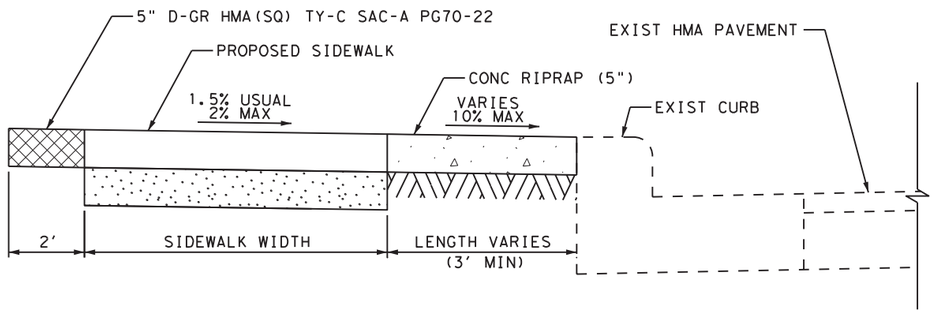

FILENAME: pw:\\kh-pw.bentley.com:kh-pw-01\Documents\01 Active Projects\TX-FTW-063586010 - US 84 (Waco Drive)\WAC 005515072\4 - Design\Plan Set\3. Roadway\US84_DET07.dgn
PLOTTED: 12/21/2020

12/21/2020

Kimley»Horn F-928

© 2021

Texas Department of Transportation

MISCELLANEOUS DETAILS

SCALE: NTS SHEET 6 OF 13

FED.RD. DIV.NO.	PROJECT ID.	HIGHWAY NO.
6	(SEE TITLE SHEET)	US 84

STATE	DIST.	COUNTY	SHEET NO.
TEXAS	WAC	MCLENNAN	157
CONT.	SECT.	JOB	
0055	15	072	

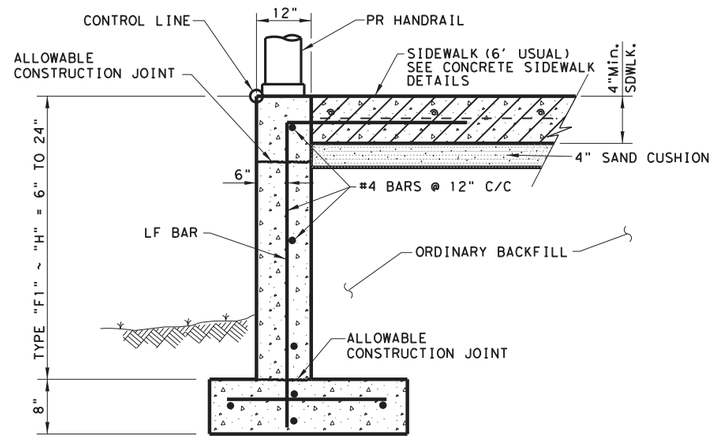

TYPE "F1" CURB‡

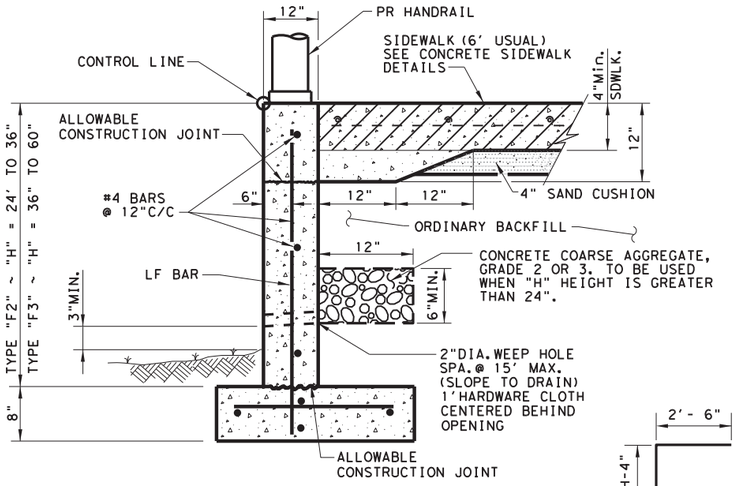

TYPE "F2" & "F3" CURB‡

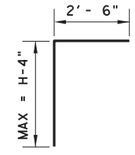

BAR "LF"

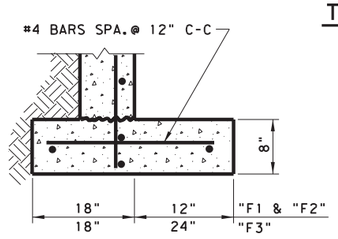

FOOTING DETAIL

CLASS C CONCRETE PAID UNDER ITEM 531, SIDEWALK. (NOTE. ADDITIONAL CONCRETE TO MEET THE THICKENED SECTIONS REQUIRED BY THESE DETAILS IS SUBSIDIARY TO ITEM 531, CURB.)

GENERAL NOTES:

1. CONCRETE FOR CURB TYPE F SHOWN SHALL MEET THE MINIMUM SPECIFICATION REQUIREMENTS OF CLASS "C" CONCRETE PER ITEM 421.
2. ALL REINFORCING STEEL SHALL BE GRADE 60.
3. WHERE CONCRETE CURB IS PLACED ON EXISTING CONCRETE PAVEMENT, THE PAVEMENT SHALL BE DRILLED AND THE REINFORCING BARS GROUTED IN PLACE.
4. EXPANSION AND CONTRACTION JOINTS SHALL BE CONSTRUCTED TO MATCH PAVEMENT JOINTS IN ALL CURBS AND CURB AND GUTTER ADJACENT TO JOINTED CONCRETE PAVEMENT. WHERE PLACEMENT OF CURB OR CURB AND GUTTER IS NOT ADJACENT TO CONCRETE PAVEMENT, EXPANSION JOINTS SHALL BE PROVIDED AT STRUCTURES, CURB RETURNS AT STREETS, AND AT LOCATIONS DIRECTED BY THE ENGINEER.
5. VERTICAL AND HORIZONTAL DOWEL BARS AND TRANSVERSE REINFORCING BARS SHALL BE PLACED AT 4 FEET C-C, UNLESS OTHERWISE SHOWN.
6. ONE-HALF INCH EXPANSION JOINT MATERIAL SHALL BE PROVIDED WHERE CURB OR CURB AND GUTTER IS ADJACENT TO SIDEWALK OR RIPRAP. THIS IS SUBSIDIARY TO THE CURB, ITEM 529.
7. UNTIL THE SIDEWALK IS COMPLETE, LATERAL SUPPORT FOR THE "F" CURBS WILL BE REQUIRED.
8. IF AGGREGATE IS REQUIRED PER THE DETAIL. IT IS PAID AS SUBSIDIARY TO THE CURB, ITEM 529.
9. ALL CONCRETE SHALL BE CLASS "C".
10. ALL REINFORCING STEEL SHALL BE GRADE 60.

‡ Until the sidewalk is complete, lateral support for the "F" curbs will be required.

DESIGN SOIL PARAMETERS:
- Soil Unit Wt. = 120 pcf
- Phi = 30 Degrees
- Cohesion = 50 psf
- Min. PI = 15
- Max. PI = 30
- SURCHARGE:
  - TYPE F CURB q = 2' Adjacent to sidewalk
  - Min. Factor of Safety against sliding is 1.5.
  - Designed in accordance with current AASHTO Standards and Interim Specifications.

12/21/2020

Kimley»Horn F-928

© 2021

Texas Department of Transportation

MISCELLANEOUS DETAILS

SCALE: NTS SHEET 7 OF 13

FED.RD. DIV.NO.	PROJECT ID.	HIGHWAY NO.
6	(SEE TITLE SHEET)	US 84

STATE	DIST.	COUNTY	SHEET NO.
TEXAS	WAC	MCLENNAN	158
CONT.	SECT.	JOB	
0055	15	072	

FILENAME: pw:\\kh-pw.bentley.com:kh-pw-01\Documents\01 Active Projects\TX-FTW-063586010 - US 84 (Waco Drive)\WAC 0055150724 - Design\Plan Set\3. Roadway\US84_DET08.dgn
PLOTTED: 12/21/2020

DEPRESSED SIDEWALK WITH INTEGRAL CURB DETAIL

N.T.S

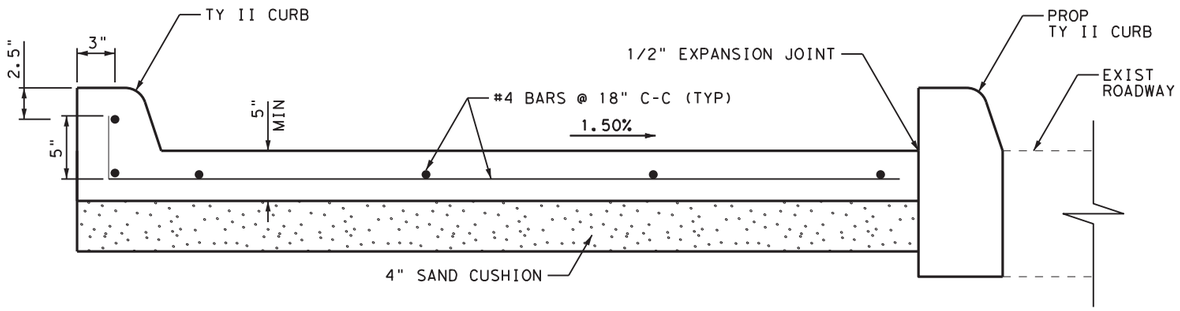

SIDEWALK WITH INTEGRAL CURB DETAIL

N.T.S

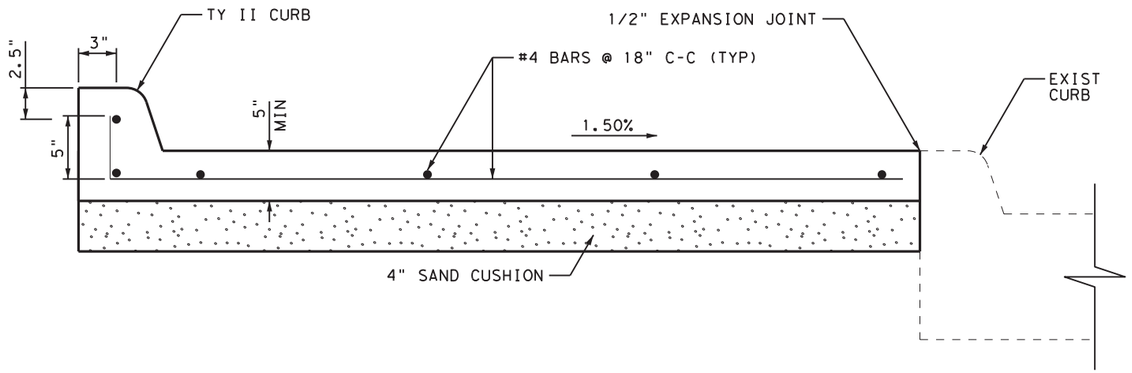

SIDEWALK WITH TOEWALL DETAIL

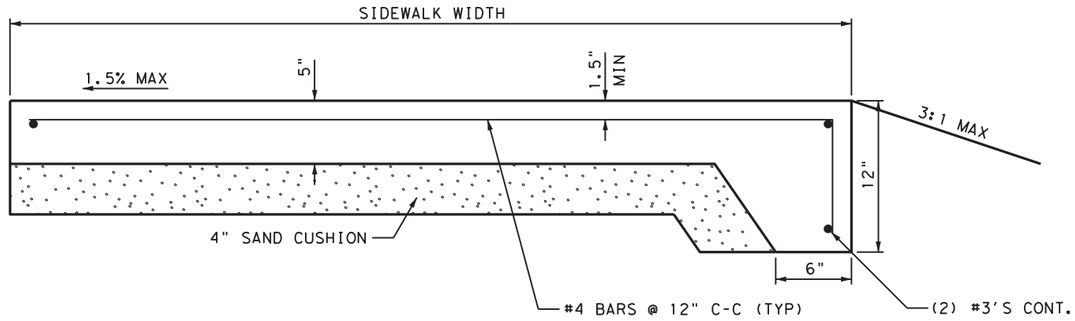

NOTES:

1. ALL MATERIALS AND CONSTRUCTION SHALL BE IN ACCORDANCE WITH ITEM 529 "CONCRETE CURB, GUTTER, AND COMBINED CURB AND GUTTER" AND ITEM 531 "SIDEWALKS".
2. INTEGRAL CURB AND TOEWALL WILL NOT BE PAID FOR DIRECTLY BUT WILL BE CONSIDERED SUBSIDIARY TO ITEM 531.
3. INTEGRAL CURB MAY BE USED IN LOCATIONS, AS APPROVED BY THE ENGINEER, TO ACCOMMODATE GRADING DUE TO UNFORESEEN FIELD CONDITIONS.
4. REFER TO CONCRETE SIDEWALK DETAILS (WACO DISTRICT) STANDARD FOR ADDITIONAL INFORMAITON.

12/21/2020

Kimley»Horn F-928

© 2021

Texas Department of Transportation

MISCELLANEOUS DETAILS

SCALE: NTS SHEET 8 OF 13

FED. RD. DIV. NO.	PROJECT ID.	HIGHWAY NO.
6	(SEE TITLE SHEET)	US 84

STATE	DIST.	COUNTY	SHEET NO.
TEXAS	WAC	MCLENNAN	159
CONT.	SECT.	JOB	
0055	15	072	

FILENAME: pw:\\kh-pw.bentley.com:kh-pw-01\Documents\01 Active Projects\TX-FTW-063586010 - US 84 (Waco Drive)\WAC 005515072\4 - Design\Plan Set\3. Roadway\US84_DET09.dgn
PLOTTED: 12/21/2020

CONCRETE STEPS

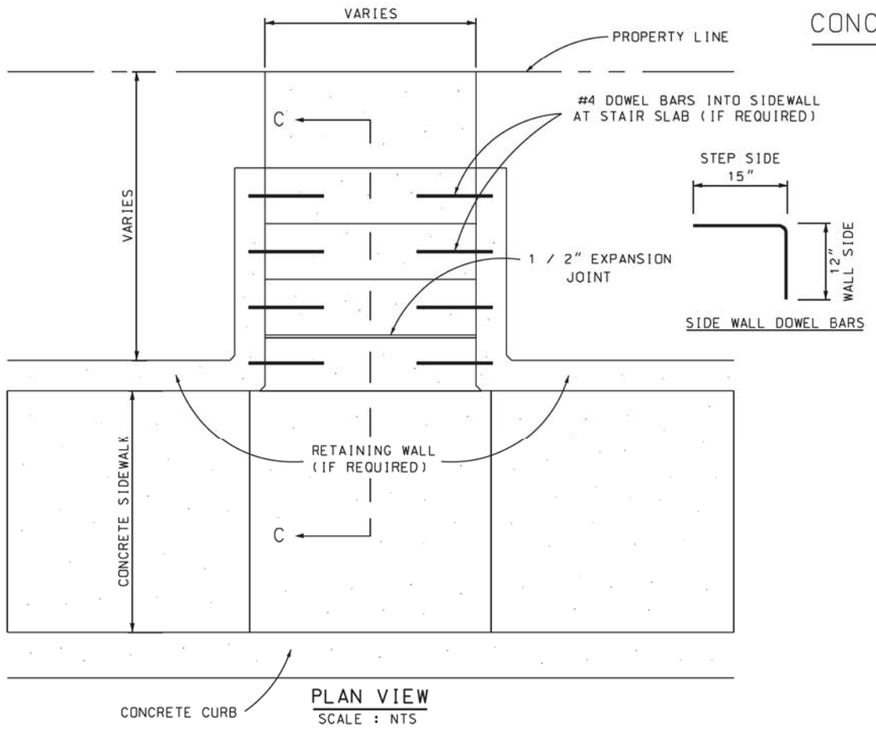

PLAN VIEW
SCALE : NTS

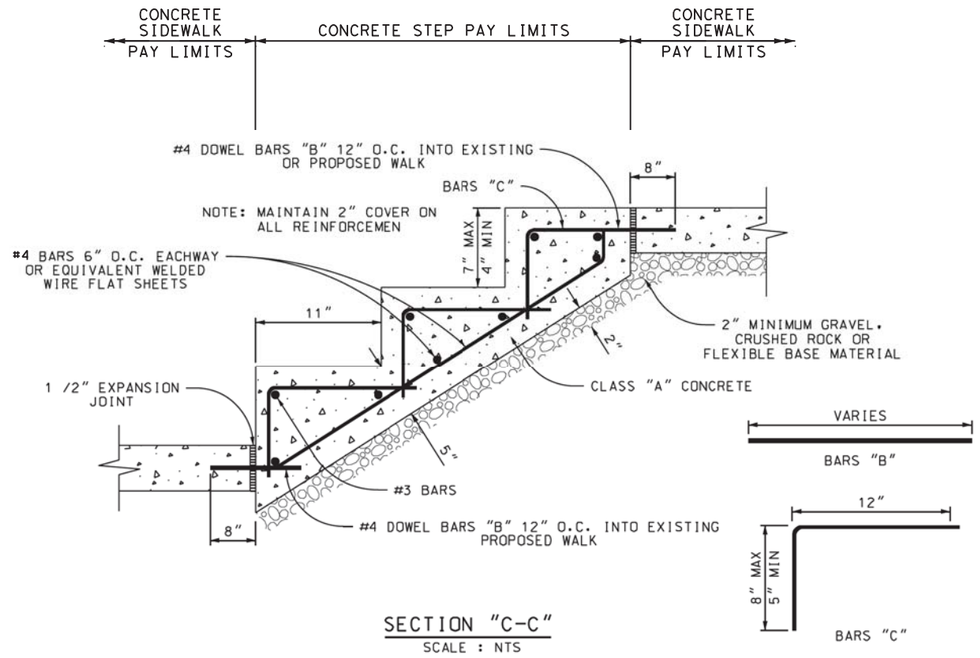

SECTION "C-C"
SCALE : NTS

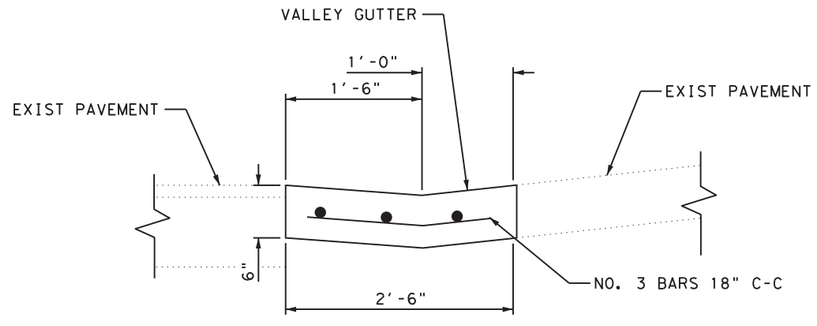

CONCRETE CURB & GUTTER (VALLEY GUTTER) DETAIL

12/21/2020

Kimley»Horn F-928

© 2021

Texas Department of Transportation

MISCELLANEOUS DETAILS

SCALE: NTS SHEET 9 OF 13

FED.RD. DIV.NO.	PROJECT ID.	HIGHWAY NO.
6	(SEE TITLE SHEET)	US 84

STATE	DIST.	COUNTY	SHEET NO.
TEXAS	WAC	MCLENNAN	
CONT.	SECT.	JOB	160
0055	15	072	

FILENAME: pw:\\kh-pw.bentley.com:kh-pw-01\Documents\01 Active Projects\TX-FTW-063586010 - US 84 (Waco Drive)\WAC 005515072\4 - Design\Plan Set\3. Roadway\US84_DET10.dgn
PLOTTED: 12/21/2020

FILENAME: pw:\\kh-pw.bentley.com:kh-pw-01\Documents\01 Active Projects\TX-FTW-063586010 - US 84 (Waco Drive)\WAC 005515072\4 - Design\Plan Set\3. Roadway\US84_DET11.dgn
PLOTTED: 12/21/2020

W-13

NOTE:
1. STANDARD METER BOX FOR 3/4" AND 1" METERS IS A CARSON 1017 12" INVERTED BOX WITH PLASTIC LID AND A CAST IRON READER LID, OR APPROVED EQUAL.

   WITH PRIOR APPROVAL FROM THE CITY, A METER MAY BE LOCATED IN AN AREA EXPOSED TO TRAFFIC. IN THIS CASE OUR STANDARD BOX FOR METERS OF THESE SIZES IS AN OLDCASTLE SERIES 38 METER BOX WITH CAST IRON HINGED LID, OR APPROVED EQUAL.

2. THE STANDARD METER BOX FOR 1 1/2" METERS IS AN OLDCASTLE SERIES 65 METER BOX WITH CAST IRON HINGED LID, OR APPROVED EQUAL.

3. METERS 2" AND LARGER WILL BE INSTALLED IN A CONCRETE VAULT.

4. WHERE METER BOX IS EXPOSED TO TRAFFIC, OR IN SIDEWALK USE CONCRETE BOX WITH CONCRETE TRAFFIC COVER AND CAST IRON READER LID.

5. NO SWEATED JOINTS, GALVANIZED OR P.V.C., WILL BE ACCEPTED. BRASS AND COPPER ONLY, THREADED OR COMPRESSION COUPLINGS.

6. THE METER IS TO BE LOCATED AS CLOSE TO THE MAIN AS POSSIBLE. (MIN. 2'-0" CLEARANCE). LOCATIONS SHOULD BE REVIEWED BY THE INSPECTOR ASSIGNED TO THE PROJECT FROM THE CITY OF WACO. VARIATIONS MAY BE APPROVED ON A CASE BY CASE BASIS ONLY.

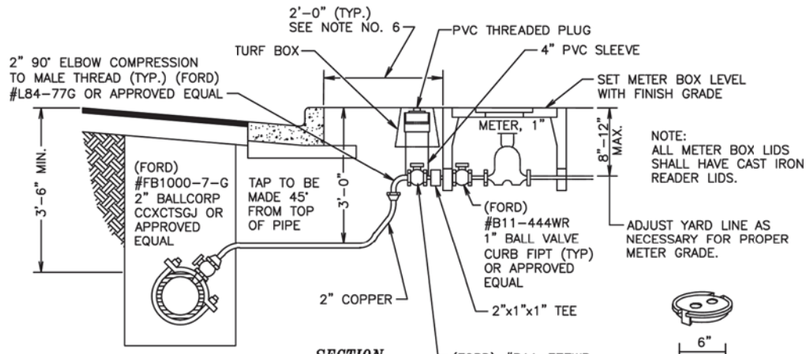

SECTION

6"ø TURF BOX

PLEASE REFER TO W-13A & W-13B WHEN 4" PVC SLEEVE IS EXPOSED TO TRAFFIC OR IS IN THE SIDEWALK.

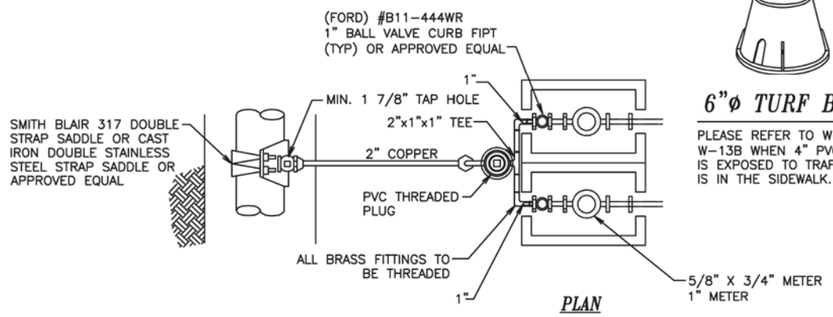

PLAN

BULLHEAD METER CONNECTION

(NO SCALE)

ENGINEERING SERVICES	REVISIONS				BOOK PAGE NUMBER
	NO.	COMMENTS	BY	DATE	0000
					DATE
	04	REMOVE SEAL	DG	09/03/2014	09/03/2014
	03	UPDATED	DG	06/28/2010	
	02	UPDATED	JS	03/19/2010	

W-13A

EAST JORDAN IRON WORKS, INC.
PRODUCT #33470000 OR APPROVED EQUAL

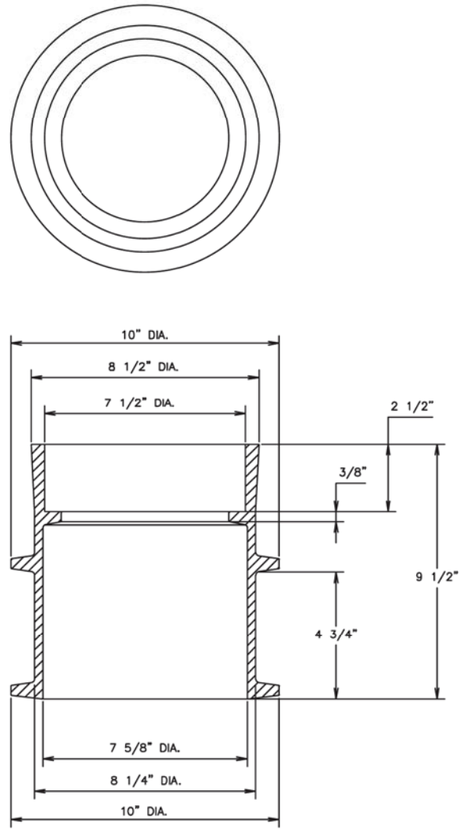

VALVE BOX

(NOT TO SCALE)

ENGINEERING SERVICES	REVISIONS				BOOK PAGE NUMBER
	NO.	COMMENTS	BY	DATE	0000
					DATE
	1	REMOVE SEAL	DG	09/03/2014	09/03/2014

12/21/2020

Kimley»Horn F-928

© 2021

Texas Department of Transportation

MISCELLANEOUS DETAILS

SCALE: NTS SHEET 10 OF 13

FED.RD. DIV.NO.	PROJECT ID.	HIGHWAY NO.
6	(SEE TITLE SHEET)	US 84

STATE	DIST.	COUNTY	SHEET NO.
TEXAS	WAC	MCLENNAN	161
CONT.	SECT.	JOB	
0055	15	072	

FILENAME: pw:\\kh-pw.bentley.com:kh-pw-01\Documents\01 Active Projects\TX-FTW-063586010 - US 84 (Waco Drive)\WAC 005515072\4 - Design\Plan Set\3. Roadway\US84_DET12.dgn
PLOTTED: 12/21/2020

W-13B

EAST JORDAN IRON WORKS, INC.
PRODUCT #33170002OR APPROVED
EQUAL

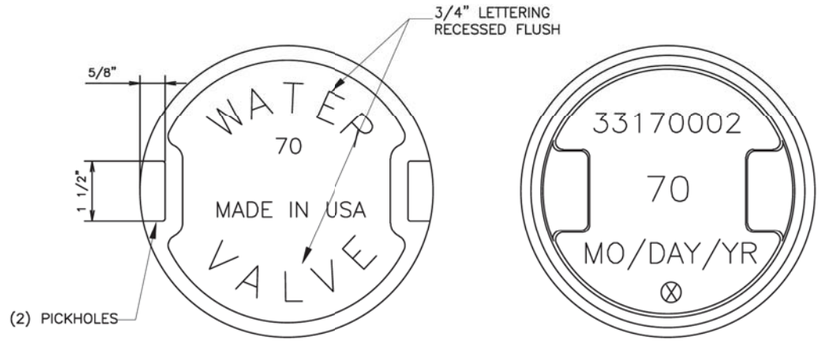

COVER TOP VIEW
(NOT TO SCALE)

COVER BACK VIEW
(NOT TO SCALE)

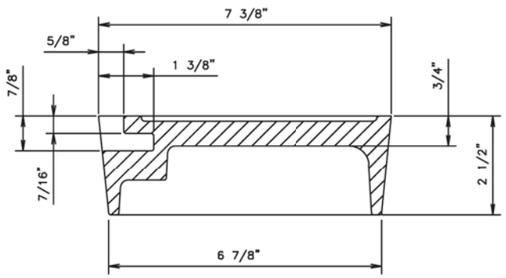

COVER SECTION
(NOT TO SCALE)

VALVE BOX COVER

ENGINEERING SERVICES	REVISIONS NO.	COMMENTS	BY	DATE	BOOK PAGE NUMBER 0000
WACO					DATE 09/03/2014
	1	REMOVE SEAL	DG	09/03/2014	

W-13C

NOTE:
1. STANDARD METER BOX FOR 3/4" AND 1" METERS IS A CARSON 1017 12" INVERTED BOX WITH PLASTIC LID AND A CAST IRON READER LID, OR APPROVED EQUAL.

   WITH PRIOR APPROVAL FROM THE CITY, A METER MAY BE LOCATED IN AN AREA EXPOSED TO TRAFFIC. IN THIS CASE OUR STANDARD BOX FOR METERS OF THESE SIZES IS AN OLDCASTLE SERIES 38 METER BOX WITH CAST IRON HINGED LID, OR APPROVED EQUAL.
2. THE STANDARD METER BOX FOR 1 1/2" METERS IS AN OLDCASTLE SERIES 65 METER BOX WITH CAST IRON HINGED LID, OR APPROVED EQUAL.
3. METERS 2" AND LARGER WILL BE INSTALLED IN A CONCRETE VAULT.
4. WHERE METER BOX IS EXPOSED TO TRAFFIC, OR IN SIDEWALK USE CONCRETE BOX WITH CONCRETE TRAFFIC COVER AND CAST IRON READER LID.
5. NO SWEATED JOINTS, GALVANIZED OR P.V.C., WILL BE ACCEPTED. BRASS AND COPPER ONLY, THREADED OR COMPRESSION COUPLINGS.
6. THE METER IS TO BE LOCATED AS CLOSE TO THE MAIN AS POSSIBLE. (MIN. 2'-0" CLEARANCE). LOCATIONS SHOULD BE REVIEWED BY THE INSPECTOR ASSIGNED TO THE PROJECT FROM THE CITY OF WACO. VARIATIONS MAY BE APPROVED ON A CASE BY CASE BASIS ONLY.

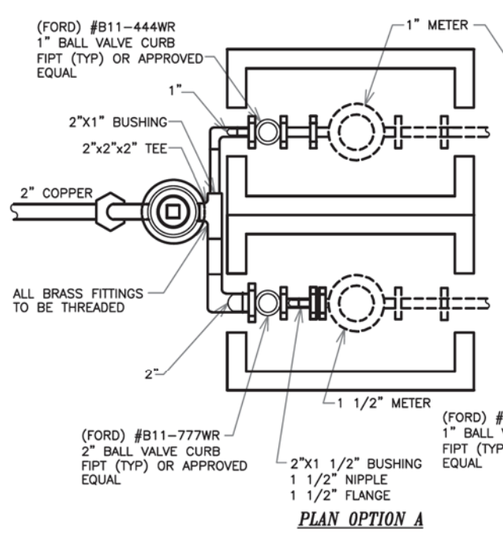

PLAN OPTION A

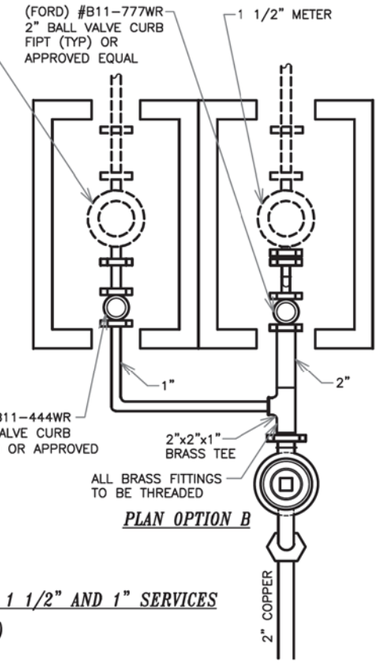

PLAN OPTION B

COMMERCIAL BULLHEAD METER WITH 1 1/2" AND 1" SERVICES
(NO SCALE)

ENGINEERING SERVICES	REVISIONS NO.	COMMENTS	BY	DATE	BOOK PAGE NUMBER 0000
WACO					DATE 09/03/2014
	02	REMOVE SEAL	DG	09/03/2014	
	01	ADDED	JS	03/19/2010	

12/21/2020

Kimley»Horn F-928

© 2021
Texas Department of Transportation

MISCELLANEOUS DETAILS

SCALE: NTS SHEET 11 OF 13

FED.RD. DIV.NO.	PROJECT ID.	HIGHWAY NO.
6	(SEE TITLE SHEET)	US 84

STATE	DIST.	COUNTY	SHEET NO.
TEXAS	WAC	MCLENNAN	162
CONT.	SECT.	JOB	
0055	15	072	

FILENAME: pw:\\kh-pw.bentley.com:kh-pw-01\Documents\01 Active Projects\TX-FTW-063586010 - US 84 (Waco Drive)\WAC 005515072\4 - Design\Plan Set\3. Roadway\US84_DET13.dgn
PLOTTED: 12/21/2020

W-14

NOTES:
1. STANDARD METER BOX FOR 3/4" AND 1" METERS IS A CARSON 1017 12" INVERTED BOX WITH PLASTIC LID AND A CAST IRON READER LID, OR APPROVED EQUAL.

   WITH PRIOR APPROVAL FROM THE CITY, A METER MAY BE LOCATED IN AN AREA EXPOSED TO TRAFFIC. IN THIS CASE OUR STANDARD BOX FOR METERS OF THESE SIZES IS AN OLDCASTLE SERIES 38 METER BOX WITH CAST IRON HINGED LID, OR APPROVED EQUAL.
2. THE STANDARD METER BOX FOR 1 1/2" METERS IS AN OLDCASTLE SERIES 65 METER BOX WITH CAST IRON HINGED LID, OR APPROVED EQUAL.
3. METERS 2" AND LARGER WILL BE INSTALLED IN A CONCRETE VAULT.
4. WHERE METER BOX IS EXPOSED TO TRAFFIC, OR IN SIDEWALK USE CONCRETE BOX WITH CONCRETE TRAFFIC COVER AND CAST IRON READER LID.
5. NO SWEATED JOINTS, GALVANIZED OR P.V.C., WILL BE ACCEPTED. BRASS AND COPPER ONLY, THREADED OR COMPRESSION COUPLINGS.
6. THE METER IS TO BE LOCATED AS CLOSE TO THE MAIN AS POSSIBLE. (MIN. 2'-0" CLEARANCE). LOCATIONS SHOULD BE REVIEWED BY THE INSPECTOR ASSIGNED TO THE PROJECT FROM THE CITY OF WACO. VARIATIONS MAY BE APPROVED ON A CASE BY CASE BASIS ONLY.

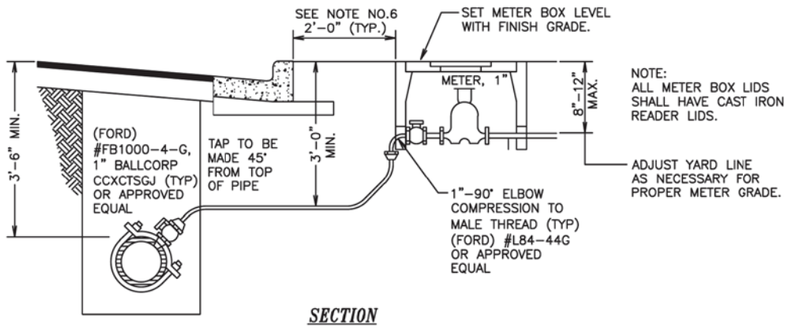

SECTION

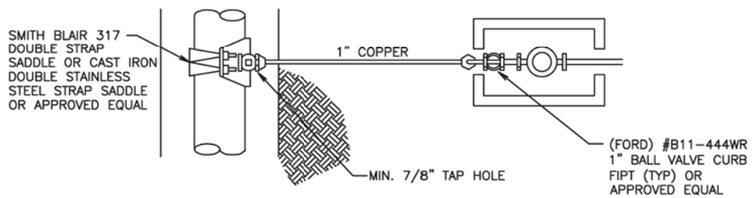

PLAN

TYPICAL RESIDENTIAL – METER SERVICE CONNECTION
(NO SCALE)

WACO ENGINEERING SERVICES	REVISIONS NO.	COMMENTS	BY	DATE	BOOK PAGE NUMBER 0000
	05	REMOVE SEAL	DG	09/03/2014	DATE 09/03/2014
	04	ADD "MIN" TO 3'-0" DIMENSION DEPTH-FINISH GRADE TO SERVICE.	DG	04/30/2014	
	03	UPDATED	DG	06/28/2010	
	02	UPDATED	JS	03/19/2010	

W-14A

NOTES:
1. STANDARD METER BOX FOR 3/4" AND 1" METERS IS A CARSON 1017 12" INVERTED BOX WITH PLASTIC LID AND A CAST IRON READER LID, OR APPROVED EQUAL.

   WITH PRIOR APPROVAL FROM THE CITY, A METER MAY BE LOCATED IN AN AREA EXPOSED TO TRAFFIC. IN THIS CASE OUR STANDARD BOX FOR METERS OF THESE SIZES IS AN OLDCASTLE SERIES 38 METER BOX WITH CAST IRON HINGED LID, OR APPROVED EQUAL.
2. THE STANDARD METER BOX FOR 1 1/2" METERS IS AN OLDCASTLE SERIES 65 METER BOX WITH CAST IRON HINGED LID, OR APPROVED EQUAL.
3. METERS 2" AND LARGER WILL BE INSTALLED IN A CONCRETE VAULT.
4. WHERE METER BOX IS EXPOSED TO TRAFFIC, OR IN SIDEWALK USE CONCRETE BOX WITH CONCRETE TRAFFIC COVER AND CAST IRON READER LID.
5. NO SWEATED JOINTS, GALVANIZED OR P.V.C., WILL BE ACCEPTED. BRASS AND COPPER ONLY, THREADED OR COMPRESSION COUPLINGS.
6. THE METER IS TO BE LOCATED AS CLOSE TO THE MAIN AS POSSIBLE. (MIN. 2'-0" CLEARANCE). LOCATIONS SHOULD BE REVIEWED BY THE INSPECTOR ASSIGNED TO THE PROJECT FROM THE CITY OF WACO. VARIATIONS MAY BE APPROVED ON A CASE BY CASE BASIS ONLY.

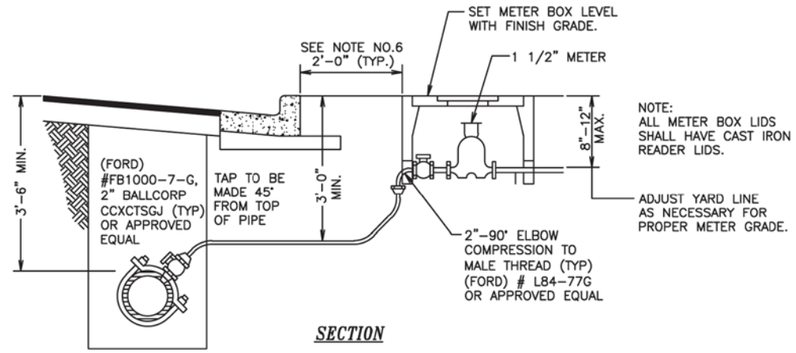

SECTION

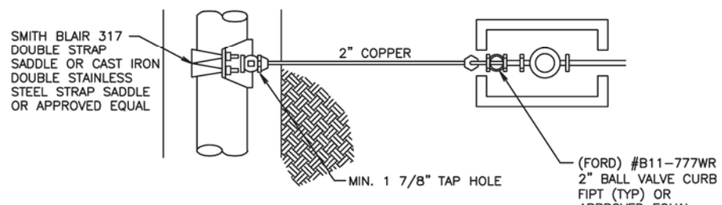

PLAN

TYPICAL COMMERCIAL OR LARGE RESIDENTIAL – METER SERVICE CONNECTION
(NO SCALE)

WACO ENGINEERING SERVICES	REVISIONS NO.	COMMENTS	BY	DATE	BOOK PAGE NUMBER 0000
	05	REMOVE SEAL	DG	09/03/2014	DATE 09/03/2014
	04	ADD "MIN" TO 3'-0" DIMENSION DEPTH-FINISH GRADE TO SERVICE.	DG	04/30/2014	
	03	UPDATED	DG	06/28/2010	
	02	UPDATED	JS	03/19/2010	

12/21/2020

Kimley»Horn F-928

© 2021

Texas Department of Transportation

MISCELLANEOUS DETAILS

SCALE: NTS SHEET 12 OF 13

FED.RD. DIV.NO.	PROJECT ID.	HIGHWAY NO.
6	(SEE TITLE SHEET)	US 84

STATE	DIST.	COUNTY	SHEET NO.
TEXAS	WAC	MCLENNAN	163
CONT.	SECT.	JOB	
0055	15	072	

NOTES:

1. STANDARD METER BOX 3/4" AND 1" METERS IS A CARSON 1017 12" INVERTED BOX WITH PLASTIC LID AND CAST IRON READER LID, OR APPROVED EQUAL.

   WITH PRIOR APPROVAL FROM THE CITY, A METER MAY BE LOCATED IN AN AREA EXPOSED TO TRAFFIC. IN THIS CASE OUR STANDARD BOX FOR METERS OF THESE SIZES IS AND OLDCASTLE SERIES 38 METER BOX WITH CAST IRON HINGED LID, OR APPROVED EQUAL.
2. THE STANDARD METER BOX 1 1/2" METERS IS AN OLDCASTLE SERIES 65 METER BOX WITH CAST IRON HINGED LID OR APPROVED EQUAL.
3. METERS 2" AND LARGER WILL BE INSTALLED IN A CONCRETE VAULT.
4. CONFIGURATION BASED UPON LOCATION OF YARD LINES.
5. NO SWEATED JOINTS, GALVANIZED OR P.V.C., WILL BE ACCEPTED. BRASS AND COPPER ONLY, THREADED OR COMPRESSION COUPLINGS.
6. INSTALLATIONS EXCEEDING 6 OUTLETS WILL BE DESIGNED AND APPROVED BY THE ENGINEER OF RECORD.

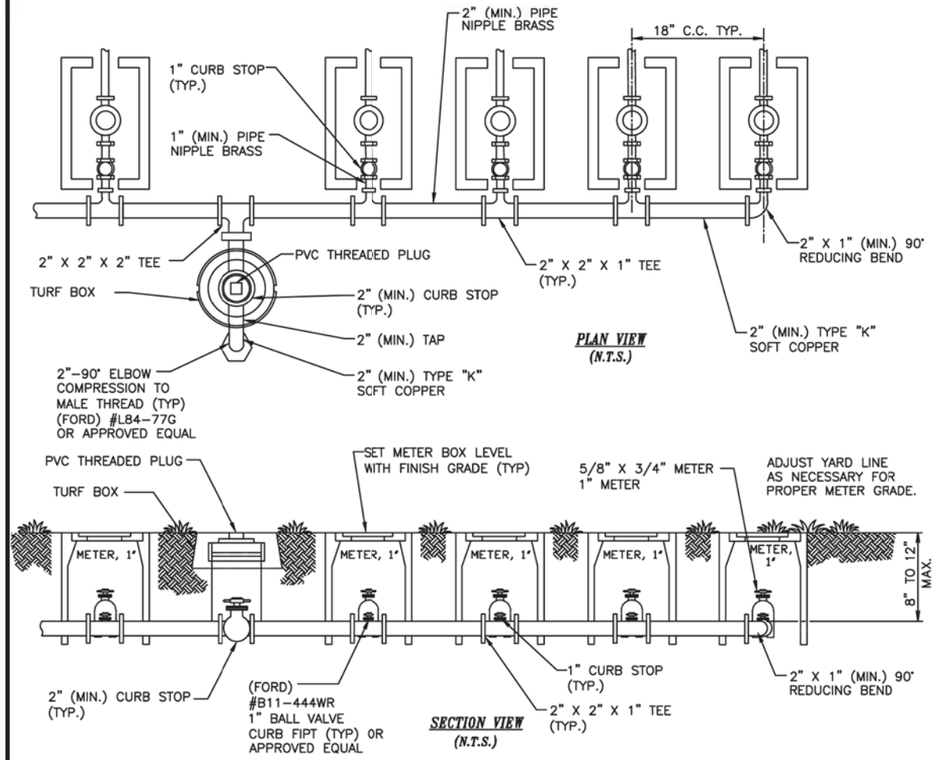

TYPICAL MANIFOLD – METER SERVICE CONNECTION
(N.T.S.)

ENGINEERING SERVICES

REVISIONS NO.	COMMENTS	BY	DATE
04	REMOVE SEAL	DG	09/03/2014
03	UPDATED	DG	06/28/2010
02	UPDATED	JS	03/19/2010

BOOK PAGE NUMBER 0000

DATE 09/03/2014

METER VAULT AND LID – NOTES

1. LARGER METERS REQUIRE PROJECT SPECIFIC, SEALED DESIGN.
2. MINIMUM 12" CLEARANCE EXCEPT ENDS.
3. CONCRETE SLAB – SOLID 6" THICKNESS.
4. METER VAULT SHALL NOT BE INSTALLED IN EXISTING OR PROPOSED SIDEWALKS, DRIVEWAYS, PAVEMENTS OR ANY TRAFFIC AREAS.
5. STANDARD METER BOX FOR 3/4" AND 1" METERS IS A CARSON 1017 12" INVERTED BOX WITH A PLASTIC LID AND A CAST IRON READER LID, OR APPROVED EQUAL.

   WITH PRIOR APPROVAL FROM THE CITY, A METER MAY BE LOCATED IN AN AREA EXPOSED TO TRAFFIC. IN THIS CASE OUR STANDARD BOX FOR METERS OF THESE SIZES IS AN OLDCASTLE SERIES 38 METER BOX WITH CAST IRON HINGED LID, OR APPROVED EQUAL.
6. THE STANDARD METER BOX FOR 1 1/2" METERS IS AN OLDCASTLE SERIES 65 METER BOX WITH CAST IRON HINGED LID, OR APPROVED EQUAL.
7. METERS 2" AND LARGER WILL BE INSTALLED IN A CONCRETE VAULT.

NO TRAFFIC LOCATION

1. STANDARD ACCESS DOOR IS 3' X 6' CLEAR, ALUMINUM HATCHWAY AND SPRING ASSISTED. DOOR SHALL BE CAST IN AND MOUNTED FLUSH. HINGED 1/4" ALUMINUM DIAMOND PLATE COVER, WITH 1/4" EXTRUDED ALUMINUM FRAME. HATCH TO BE FURNISHED WITH STAINLESS STEEL HARDWARE.
2. STEEL LID SINGLE OR DOUBLE LEAF; DESIGNED TO WITHSTAND AASHTO H-20 WHEEL LOADINGS SUITABLE FOR USE IN OFF-STREET LOCATIONS WHERE NOT SUBJECT TO HIGH DENSITY TRAFFIC.
3. CONCRETE: CLASS A CONCRETE WITH DESIGN STRENGTH OF 3000 PSI AT 28 DAYS. UNIT IS OF MONOLITHIC CONSTRUCTION AT FLOOR AND FIRST STAGE OF WALL WITH SECTIONAL RISER TO REQUIRED DEPTH. ALL CONCRETE JOINTS SEALED WATERTIGHT w/ RAMNEK GASKET OR APPROVED EQUAL.
4. REINFORCEMENT: ALL BARS GRADE 60. SLAB TYPE: #4 BAR 8" OC-EW. TYPE: 3 EACH #5 BAR CONTINUOUS AND DOUBLED ON CORNERS.

MAIN SIZE	BY PASS	L	W	H	INSIDE DIMENSIONS
2"	1"	5'-7"	5'-7"	4'-3"	5'-0"X 5'-0"X 3'-5"
3"	2"	8'-2"	5'-2"	5'-6"	7'-6"X 4'-6"X 4'-6"
4"	2"	8'-2"	5'-2"	5'-6"	7'-6"X 4'-6"X 4'-6"
6"	4"	13'-0"	7'-0"	6'-0"	12'-0"X 6'-0"X 5'-0"

TRAFFIC LOCATION – REQUIRES PRIOR CITY OF WACO APPROVAL

1. STANDARD ACCESS DOOR IS 3' X 5' CLEAR, AND SPRING ASSISTED. DOOR SHALL BE CAST IN FLUSH.
2. STEEL LID SINGLE OR DOUBLE LEAF; DESIGNED TO WITHSTAND AASHTO H-20-44 WHEEL LOADINGS SUITABLE FOR USE IN OFF-STREET LOCATIONS PER CALCULATION NUMBER.
3. HANDHOLE TO BE PLACED ON A 6" BASE OF CRUSHER RUN FOR EVEN LOAD DISTRIBUTION AND EASE OF INSTALLATION.
4. CONCRETE DESIGN IN ACCORDANCE WITH AASHTO H-20-44 TRAFFIC BRIDGE LOADING USING 5,500 PSI COMPRESSIVE STRENGTH ASTM A-706 STEEL REINFORCEMENT PER CALCULATION NUMBER. UNIT IS OF MONOLITHIC CONSTRUCTION AT FLOOR AND FIRST STAGE OF WALL WITH SECTIONAL RISER TO REQUIRED DEPTH. ALL CONCRETE JOINTS SEALED WATERTIGHT w/ RAMNEK GASKET OR APPROVED EQUAL.

ENGINEERING SERVICES

REVISIONS NO.	COMMENTS	BY	DATE
04	REMOVE SEAL	DG	09/03/2014
03	UPDATED	DG	07/12/2010
02	UPDATED	JS	03/19/2010

BOOK PAGE NUMBER 0000

DATE 09/03/2014

STATE OF TEXAS · JEFFREY T. RUTH · 129021 · LICENSED PROFESSIONAL ENGINEER

12/21/2020

Kimley»Horn F-928

© 2021

Texas Department of Transportation

MISCELLANEOUS DETAILS

SCALE: NTS SHEET 13 OF 13

FED. RD. DIV. NO.	PROJECT ID.	HIGHWAY NO.
6	(SEE TITLE SHEET)	US 84

STATE	DIST.	COUNTY	SHEET NO.
TEXAS	WAC	MCLENNAN	164
CONT.	SECT.	JOB	
0055	15	072	

FILENAME: pw:\\kh-pw.bentley.com:kh-pw-01\Documents\01 Active Projects\TX-FTW-063586010 - US 84 (Waco Drive)\WAC 005515072\4 - Design\Plan Set\3. Roadway\US84_DET14.dgn
PLOTTED: 12/21/2020

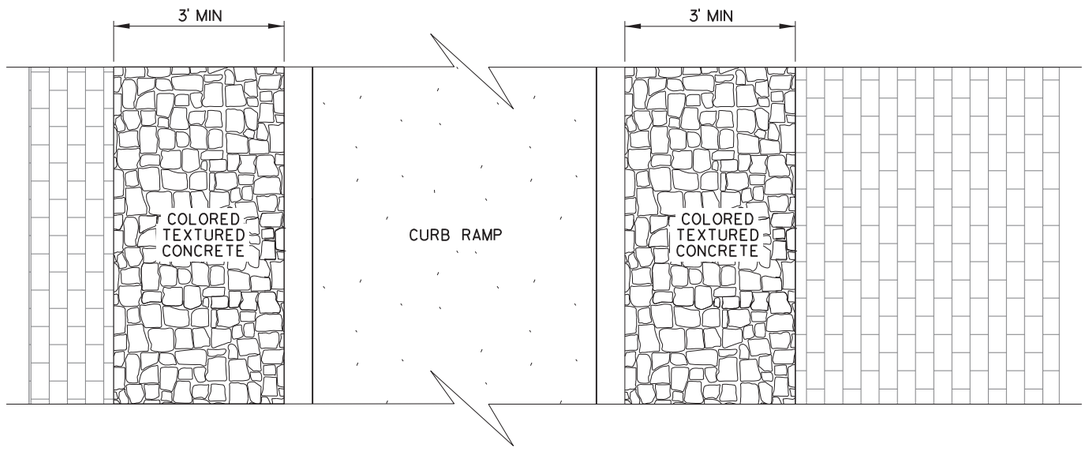

COLORED TEXTURED CONCRETE - PLAN VIEW

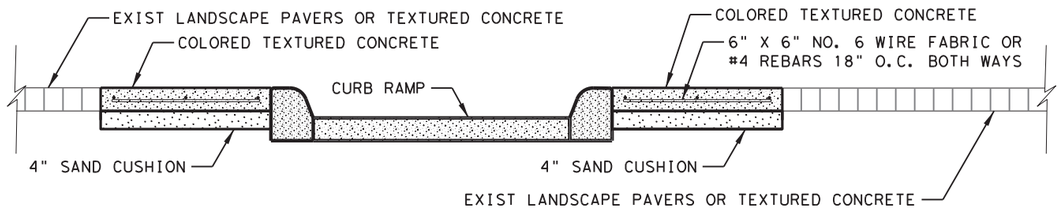

COLORED TEXTURED CONCRETE - SECTION VIEW

COLORED TEXTURED CONCRETE NOTES:

1. USE ENGLISH YORKSTONE - SCULPTURED GRANITE PATTERN BY L.M. SCOFIELD COMPANY, OR APPROVED EQUAL. (http://www.scofield.com/scofield-decorative-concrete-stone-patterns.html)

2. FOR COLORANTS IN COLORED TEXTURED CONCRETE, APPLY INTEGRAL CONCRETE COLORANT ACCORDING TO THE MANUFACTURER'S RECOMMENDATIONS. SUPPLY THE ENGINEER WITH A COPY OF THE RECOMMENDATIONS.

3. COLORANTS:
   INTEGRAL COLOR SG: PRARIE BEIGE
   INTEGRAL COLOR SG: METALLIC GRAY

4. PATTERNS AND COLORANTS LISTED ARE BY L.M. SCOFIELD CO. AND ARE USED FOR EXAMPLES ONLY. APPROVED EQUALS ARE ACCEPTABLE.

5. PROTECT ADJACENT CONCRETE SURFACES FROM COLORANTS.

6. REFER TO GENERAL NOTES FOR ADDITIONAL INFORMATION.

SETH T. RUTLEDGE 129231 LICENSED PROFESSIONAL ENGINEER STATE OF TEXAS

12/21/2020

Kimley»Horn F-928

© 2021

Texas Department of Transportation

COLORED TEXTURED CONCRETE DETAILS

SCALE: NTS SHEET 1 OF 1

FED.RD. DIV.NO.	PROJECT ID.	HIGHWAY NO.
6	(SEE TITLE SHEET)	US 84

STATE	DIST.	COUNTY	SHEET NO.
TEXAS	WAC	MCLENNAN	165
CONT.	SECT.	JOB	
0055	15	072	

FILENAME: pw:\\kh-pw.bentley.com:kh-pw-01\Documents\01 Active Projects\TX-FTW-063586010 - US 84 (Waco Drive)\WAC 005515072\4 - Design\Plan Set\3. Roadway\US84_DET_SC01.dgn
PLOTTED: 12/21/2020

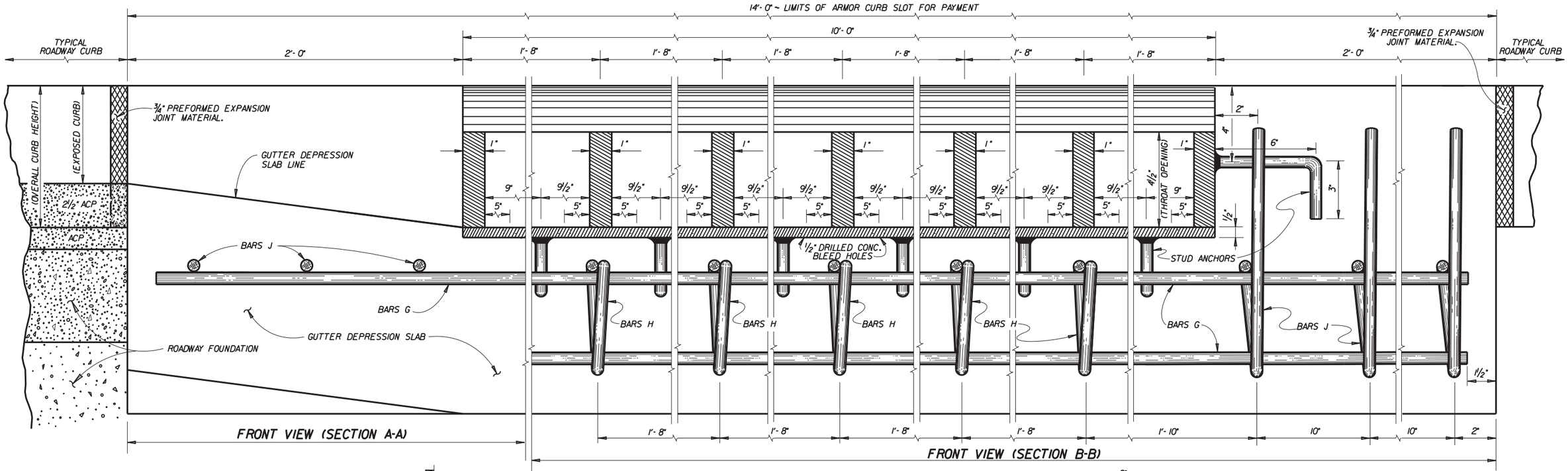

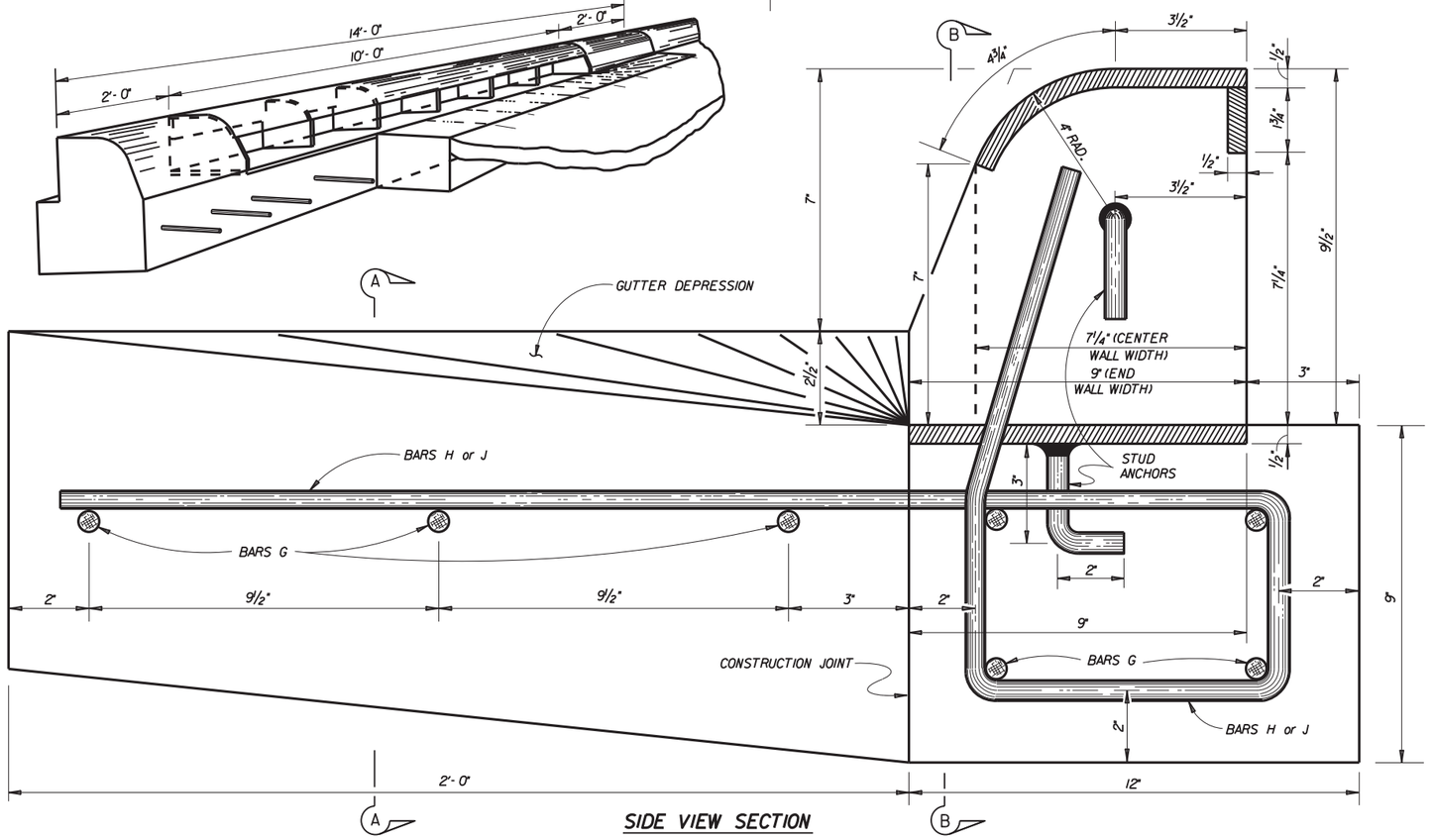

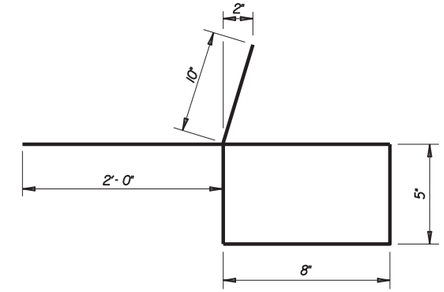

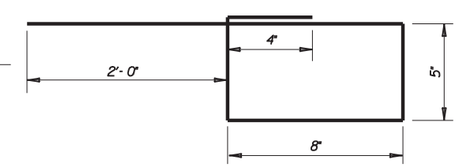

ESTIMATED QUANTITIES
FOR REINFORCING STEEL

BAR	NO.	SIZE	SPAC.	LENGTH	WEIGHT
G	7	#4	SHOWN	13'-9"	64
H	5	#4	1'-8"	4'-6"	15
J	6	#4	8"	5'-0"	20
TOTAL WEIGHT *				LBS.	99
CONCRETE FOR FOUNDATION *				C.Y.	0.47
CONCRETE FOR GUTTER DEPRESSION *				C.Y.	0.78

STRUCTURAL STEEL FOR ARMOR CURB SLOT		
STUD ANCHORS (1/2" DIA.)	LBS.	3.5
STEEL PLATE	LBS.	451
TOTAL WEIGHT *	LBS.	454.5

* FOR CONTRACTORS INFO ONLY.

GENERAL NOTES:

ALL CONCRETE SHALL BE CL."A".

ALL DIMENSIONS RELATING TO REINFORCING STEEL ARE TO CENTER OF BARS.

ALL SIDES OF ARMOR CURB SLOT AND STUD ANCHORS SHALL BE 1/4" FILLET WELDS.

ALL EXPOSED STRUCTURAL STEEL (ARMOR) SHALL BE GALVANIZED.

ALL EXPOSED EDGES ON ARMOR CURB SHALL RECEIVE A 1/8" BEVEL.

THE SHAPE OF THE TYPICAL ROADWAY CURB SHALL TRANSITION TO THE ARMOR CURB AS APPROVED BY THE ENGINEER.

STATE OF TEXAS SETH T. RUTLEDGE 129231 LICENSED PROFESSIONAL ENGINEER

12/21/2020

Kimley»Horn

F-928

© 2021 Texas Department of Transportation

ARMOR CURB SLOT
WITH CONCRETE FOUNDATION

FED. RD. DIV. NO.	PROJECT NO.		SHEET NO.
6	SEE TITLE SHEET		166
STATE	STATE DISTRICT	COUNTY	
TEXAS	WAC	MCLENNAN	
CONT.	SECT.	JOB	HIGHWAY NO.
0055	15	072	US 84

10/95
REV. 07/01

STRUCTURE DESIGN
/BRIDGE/STDS/ARMORCURB.DGN

c:\pwworking\khd\pwprod\seth.rutledge\dms98478\manhole adjustment detail.dgn 12/21/2020 3:08:10 PM

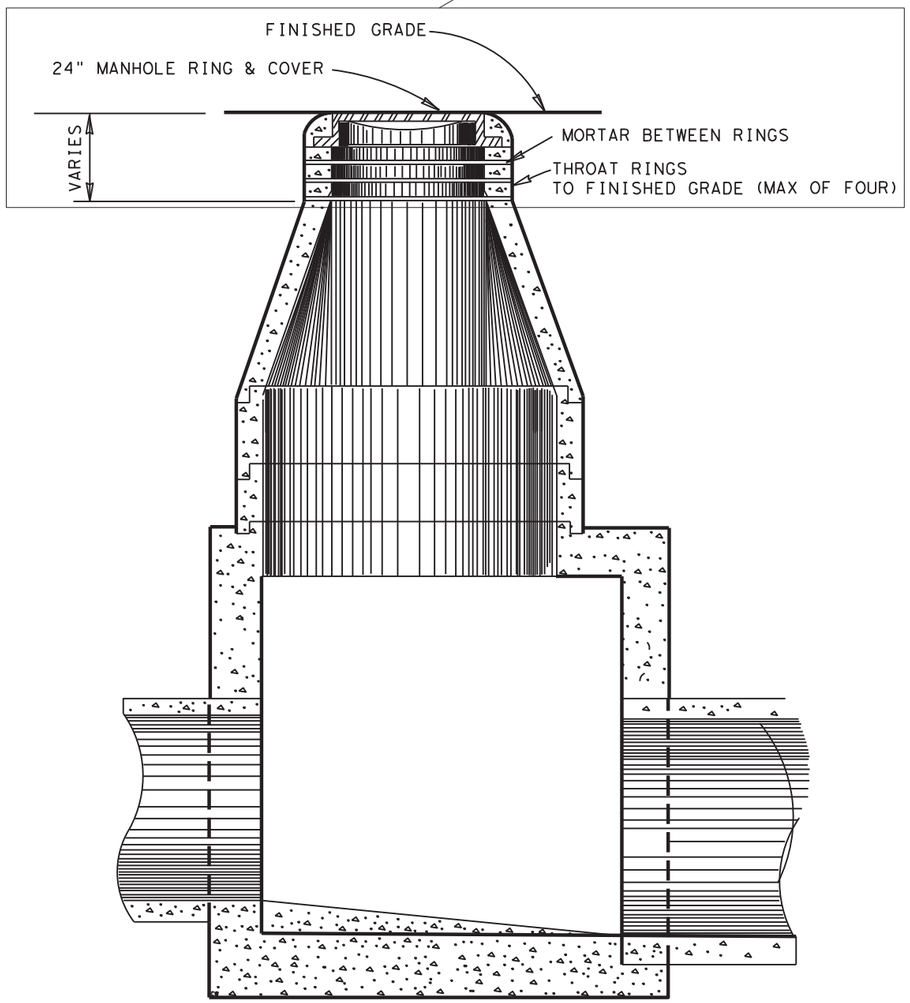

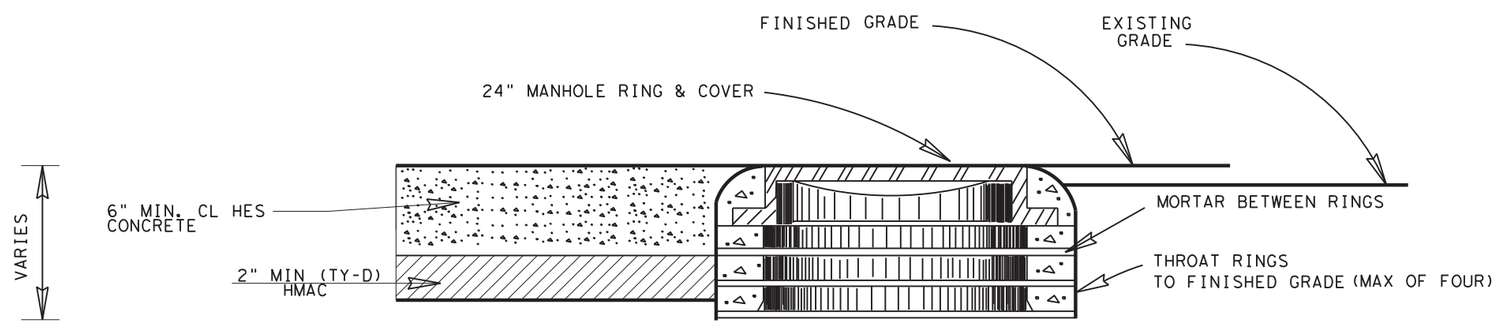

ADD OR REMOVE RINGS AND MORTAR AS REQUIRED
TO BRING COVER FLUSH WITH FINISHED ROAD SURFACE
SAW CUT AREA TO BE REMOVED TO PROVIDE SMOOTH
CLEAN REPAIR JOINT

TYPICAL REPAIR QUANTITIES
CL HES CONCRETE = 0.25 CY
TY-D HMAC = 0.15 TONS
#4 REBAR = 14.7 LBS

DIRECTION OF TRAFFIC

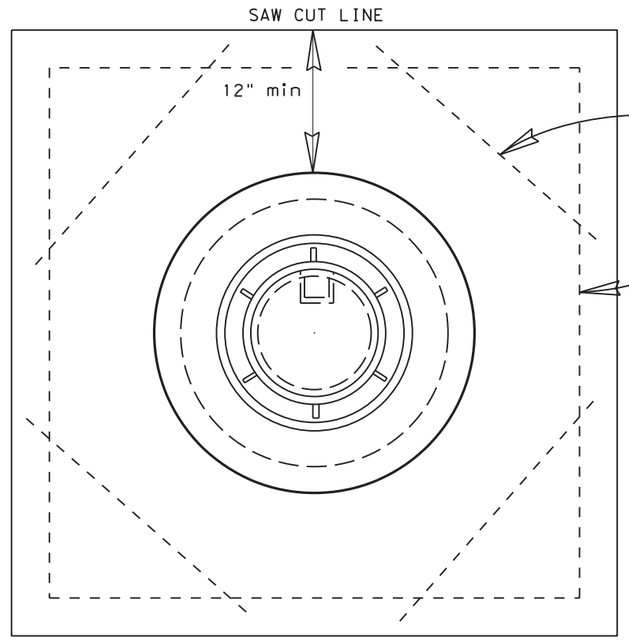

03/01/2021

© 2020 Texas Department of Transportation

MANHOLE ADJUSTMENT DETAIL

CHANGE ORDER	FED. RD. DIV. NO.	CONT	SECT	JOB	HIGHWAY
	6	0055	15	072	US 84
	STATE	DIST	COUNTY		SHEET NO.
	TEXAS	WACO	MCLENNAN		166A

NODE

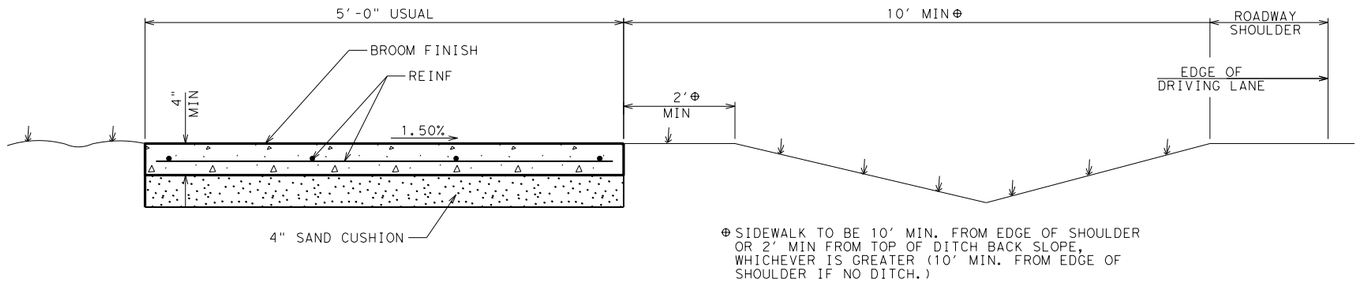

⊕ SIDEWALK TO BE 10' MIN. FROM EDGE OF SHOULDER OR 2' MIN FROM TOP OF DITCH BACK SLOPE, WHICHEVER IS GREATER (10' MIN. FROM EDGE OF SHOULDER IF NO DITCH.)

CONCRETE SIDEWALK
(ROADWAY W/O CURB)

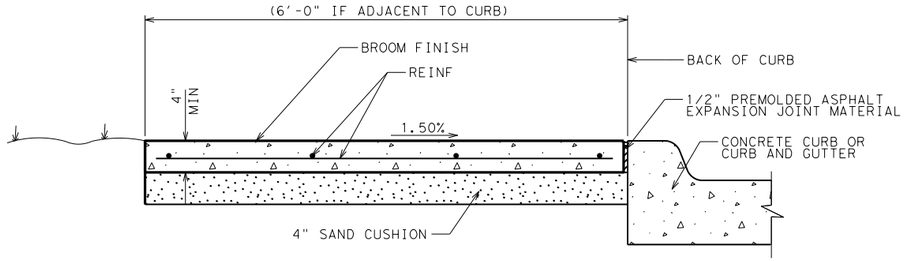

CONCRETE SIDEWALK
(ADJACENT TO CURB)

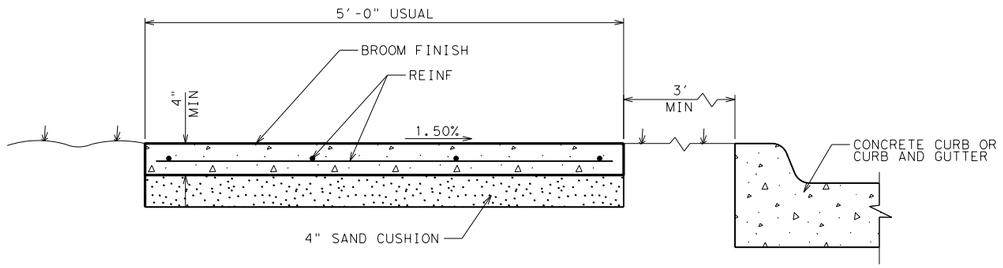

CONCRETE SIDEWALK
(OFFSET FROM CURB)

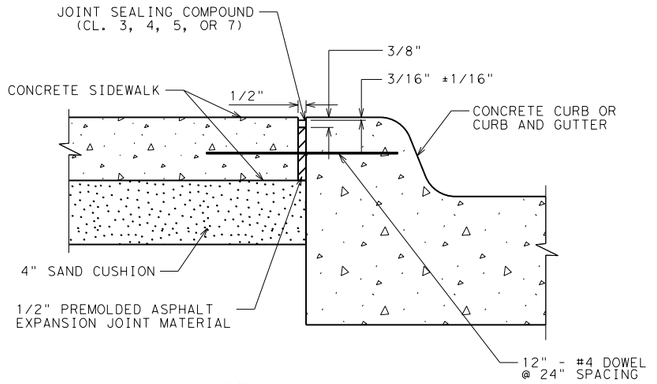

1/2" EXPANSION JOINT
(SIDEWALK ADJACENT TO CURB)

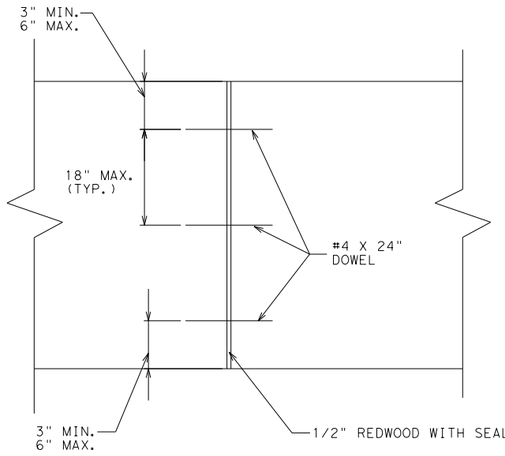

TRANSVERSE EXPANSION JOINT

GENERAL NOTES

1. SEE PLAN SHEETS FOR LOCATIONS OF SIDEWALKS AND RETAINING WALLS.
2. SEE TXDOT PED STANDARD FOR ADDITIONAL PEDESTRIAN ELEMENT CRITERIA.
3. CONSTRUCT SIDEWALK IN ACCORDANCE WITH ITEM #531.
4. UNLESS SPECIFIED ELSEWHERE IN THE PLANS TO BE ONLY REINFORCING BARS, THE REINFORCEMENT MAY BE COMPOSED OF REINFORCING BARS, WELDED WIRE REINFORCEMENT (WWR) OR ANY SUITABLE COMBINATION OF BOTH TYPES. UNLESS SPECIFIED ELSEWHERE IN THE PLANS, REINFORCING BARS SHALL BE #3 @ 18" C-C, GRADE 40 WITH LAP SPLICES 40 BAR DIAMETERS LONG. WELDED WIRE REINFORCEMENT (WWR) SHALL BE 6x6-#6 WIRE MESH.
5. ALL DOWELS SHALL BE ADEQUATELY SUPPORTED TO RETAIN PROPER ALIGNMENT.
6. REBAR CHAIRS SHALL BE PLACED ON 4" MAXIMUM SPACING EACH WAY.
7. DRILL & DOWEL INTO EXISTING CURB & GUTTER #4 BARS, 12" @ 24" SPACING.
8. CURING MEMBRANE SHALL BE APPLIED ACCORDING TO MANUFACTURER'S RECOMMENDATIONS.
9. PLACE EXPANSION JOINTS EVERY 40'.
10. EXPANSION JOINTS SHALL ALIGN WITH CURB AND GUTTER JOINTS.
11. PLACE CONTRACTION OR DUMMY JOINTS AT A SPACING EQUAL TO THE WIDTH OF THE WALK.
12. TYPICAL SIDEWALKS SHALL BE FORMED AND POURED AT A MAXIMUM CROSS-SLOPE OF 1.5%. ANY CROSS-SLOPES EXCEEDING 2% WILL NOT BE ACCEPTED.
13. LOGITUDINAL SLOPE OF SIDEWALKS SHALL NOT EXCEED 5% EXCEPT IN CASES WHERE THE ADJACENT ROADWAY SLOPE EXCEEDS 5%. IF ROADWAY SLOPE EXCEEDS 5%, LONGITUDINAL SLOPE OF SIDEWALKS MAY MATCH THAT OF ROADWAY.
14. CHANGES IN LEVEL GREATER THAN 1/4 INCH ARE NOT PERMITTED ALONG SIDEWALKS.
15. NEW SIDEWALK SHALL BE CONNECTED TO ALL EXISTING ADJACENT WALKS AND STEPS.
16. MINIMUM COVER OVER REINF SHOULD BE 2". MAXIMUM LATERAL COVER OVER REINF IS 3".
17. WHERE SIDEWALK OR WHEELCHAIR RAMP ADJOINS BACK OF CURB, INLET, POLE OR ANY STRUCTURE, APPROVED EXPANSION MATERIAL SHALL BE USED.
18. IF SIDEWALK WIDTH IS LESS THAN 5', PROVIDE 5' X 5' PASSING AREAS AT INTERVALS NOT TO EXCEED 200' SPACING.
19. WHERE SIDEWALK WITH RETAINING WALL IS SPECIFIED, RETAINING WALL WILL BE SUBSIDIARY TO THE ITEM, "CONCRETE SIDEWALK (SPECIAL)(RETAINING WALL)", WITH LIMITS OF PAY AS SHOWN HEREON.
20. SIDEWALK EXPANSION JOINTS SHOULD EXTEND THROUGH ADJACENT CONCRETE STRUCTURES SUCH AS CURB AND CURB AND GUTTERS.
21. BRICK SAND UNDER SIDEWALK WILL BE UNACCEPTABLE.

© Texas Department of Transportation 2014, all rights reserved

WACO DISTRICT STANDARD

CONCRETE SIDEWALK DETAILS

SHEET 1 OF 3

FED.RD. DIV.NO.	FEDERAL AID PROJECT NO.		SHEET NO.
6	SEE TITLE SHEET		167
STATE	DIST.	COUNTY	
TEXAS	WACO	MCLENNAN	
CONT.	SECT.	JOB	HIGHWAY NO.
0055	15	072	US 84

CONCRETE SIDEWALK DETAILS

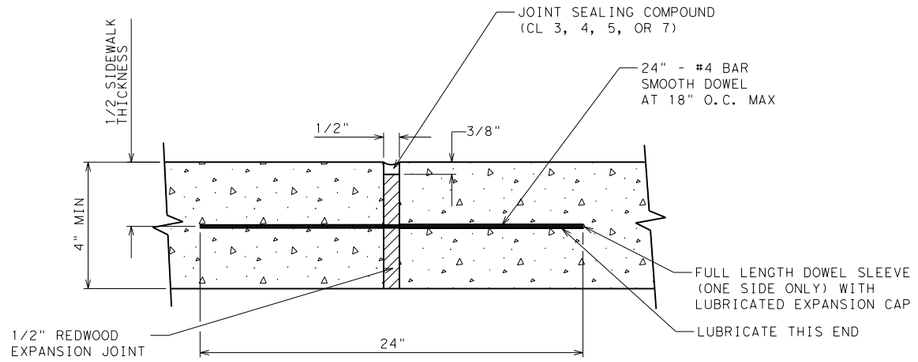

EXPANSION JOINT
(SIDEWALK)

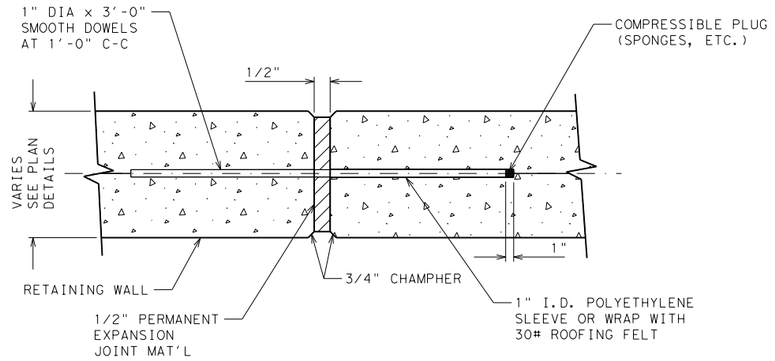

EXPANSION JOINT
(RETAINING WALL)

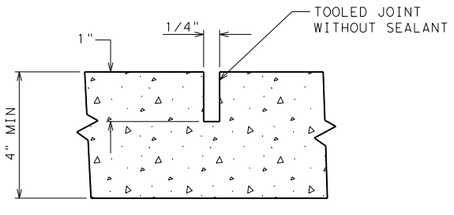

CONTRACTION JOINT

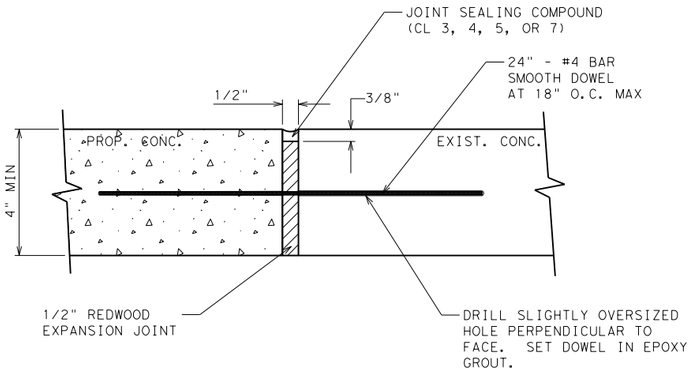

DOWEL TO EXISTING DETAIL

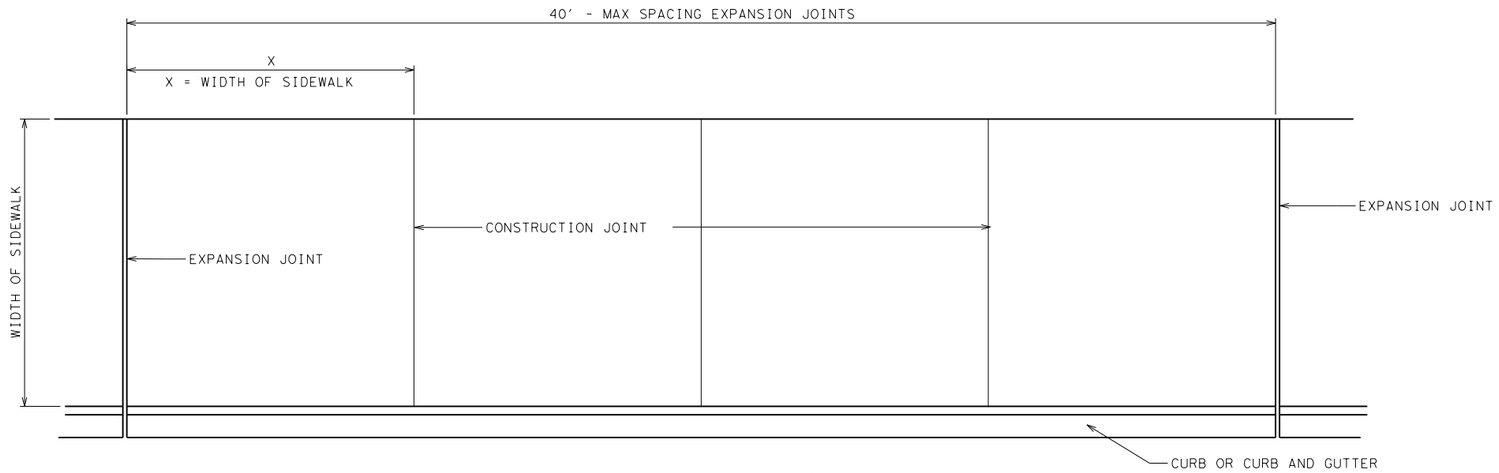

CONCRETE POUR DETAIL

Texas Department of Transportation
© 2014, all rights reserved

WACO DISTRICT STANDARD

CONCRETE SIDEWALK DETAILS

SHEET 2 OF 3

FED.RD. DIV.NO.	FEDERAL AID PROJECT NO.		SHEET NO.
6	SEE TITLE SHEET		168
STATE	DIST.	COUNTY	
TEXAS	WACO	MCLENNAN	
CONT.	SECT.	JOB	HIGHWAY NO.
0055	15	072	US 84

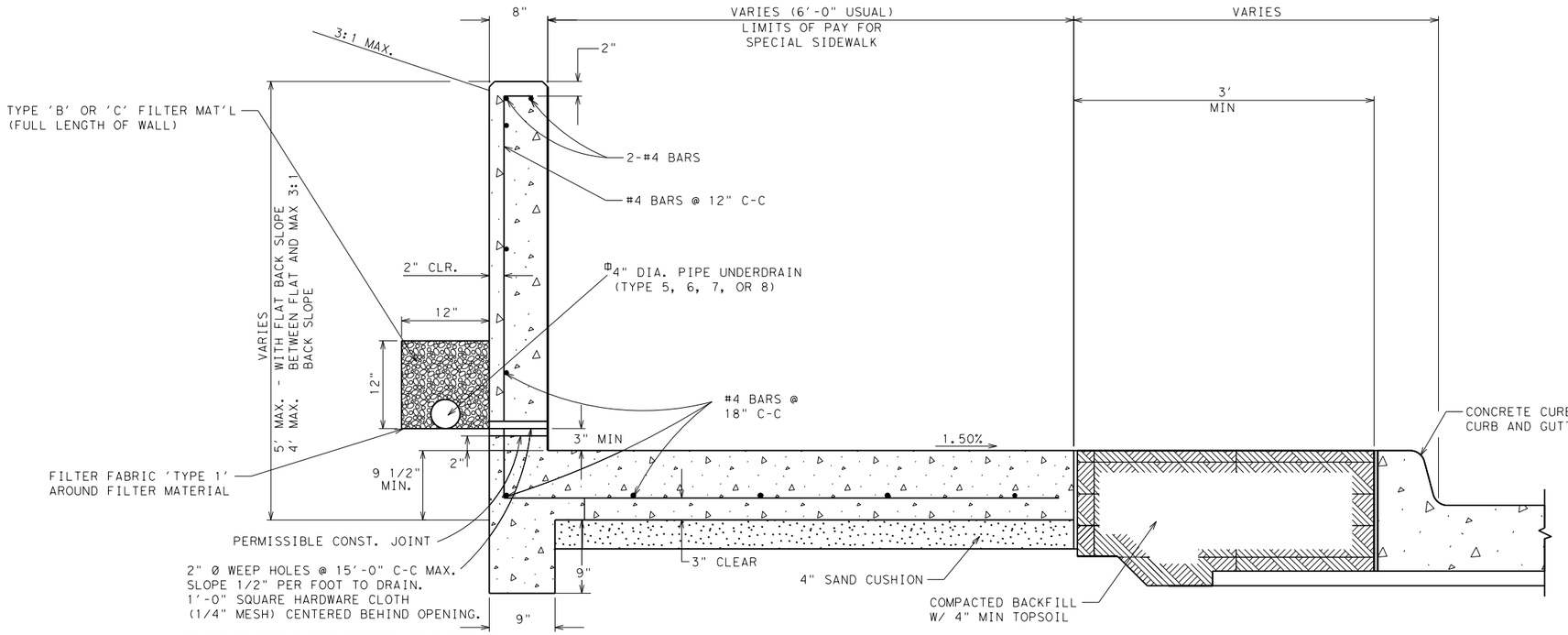

Φ SLOPE TO DRAIN AND CONNECT TO STORM DRAIN. IF, IN THE OPINION OF THE ENGINEER, USE OF UNDERDRAIN IS IMPRACTICAL, WEEP HOLES MAY BE USED.

SIDEWALK REMOTE FROM CURB

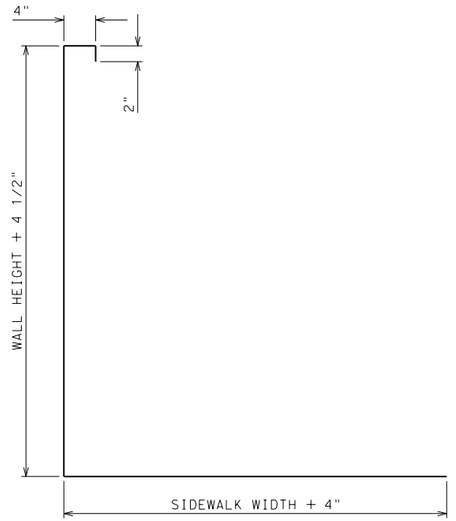

REINFORCING STEEL DETAIL

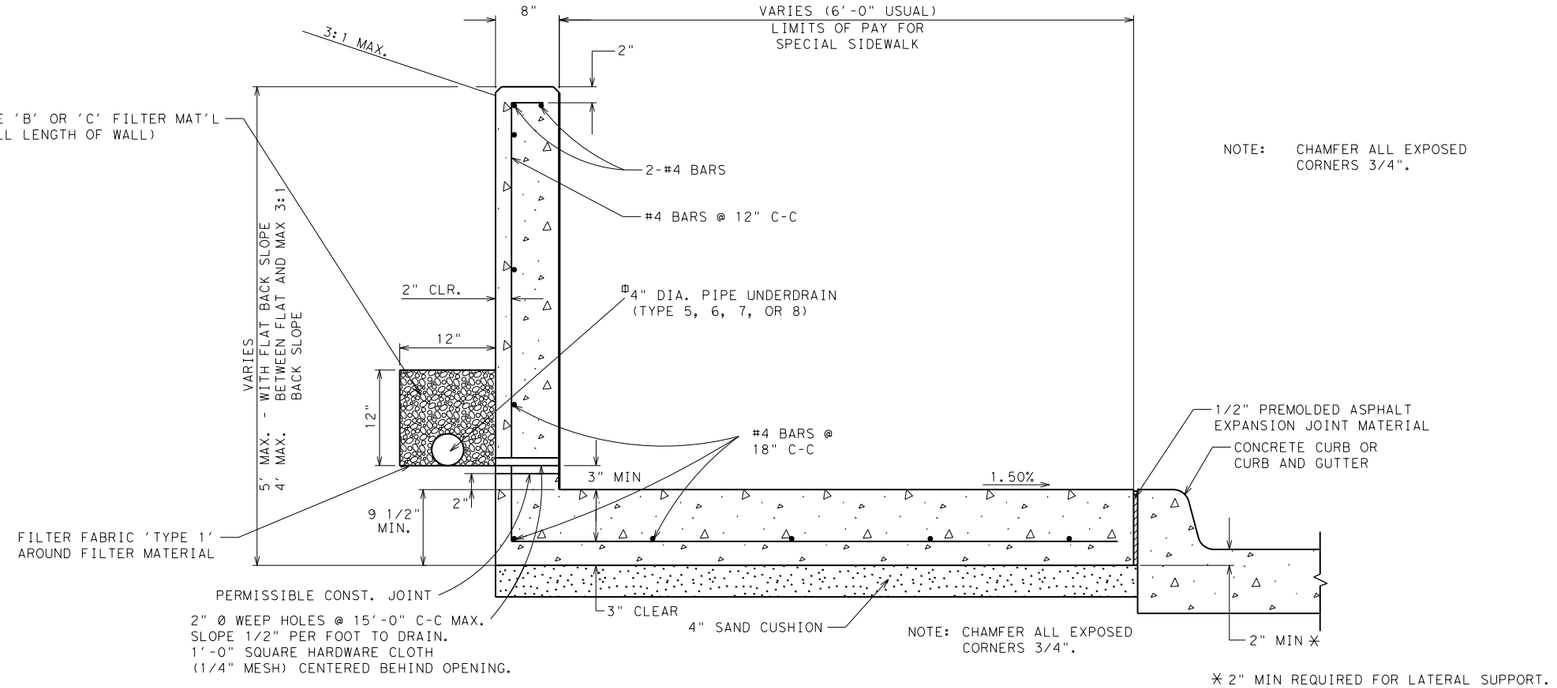

NOTE: CHAMFER ALL EXPOSED CORNERS 3/4".

✳ 2" MIN REQUIRED FOR LATERAL SUPPORT.

Φ SLOPE TO DRAIN AND CONNECT TO STORM DRAIN. IF, IN THE OPINION OF THE ENGINEER, USE OF UNDERDRAIN IS IMPRACTICAL, WEEP HOLES MAY BE USED.

SIDEWALK ADJACENT TO CURB

SPECIAL CONCRETE SIDEWALK W/RETAINING WALL

© Texas Department of Transportation
2014, all rights reserved

WACO DISTRICT STANDARD

CONCRETE SIDEWALK DETAILS

SHEET 3 OF 3

FED.RD. DIV.NO.	FEDERAL AID PROJECT NO.		SHEET NO.
6	SEE TITLE SHEET		169
STATE	DIST.	COUNTY	
TEXAS	WACO	MCLENNAN	
CONT.	SECT.	JOB	HIGHWAY NO.
0055	15	072	US 84

DISCLAIMER:
The use of this standard is governed by the "Texas Engineering Practice Act". No warranty of any kind is made by TxDOT for any purpose whatsoever. TxDOT assumes no responsibility for the conversion of this standard to other formats or for incorrect results or damages resulting from its use.

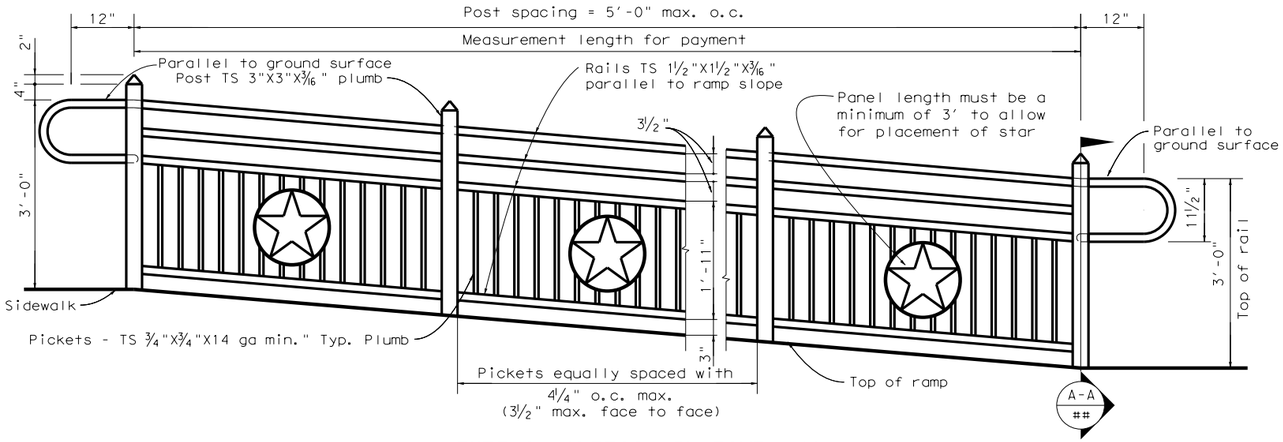

TYPE A HANDRAIL ON RAMP

(Used in all cases unless the use will create a site obstruction)

✳ Type D Handrail eliminates the grasping bar and rail returns. All other elements remain the same. Type D Handrail shall be used only for a barrier.

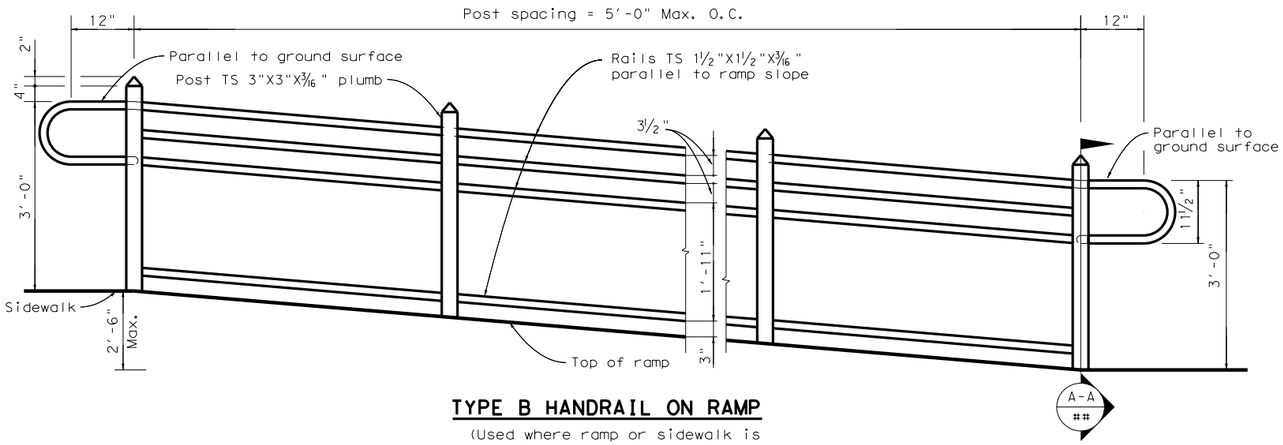

TYPE B HANDRAIL ON RAMP

(Used where ramp or sidewalk is less than 2'-6" above adjacent surface and where Type A rail creates a sight obstruction.)

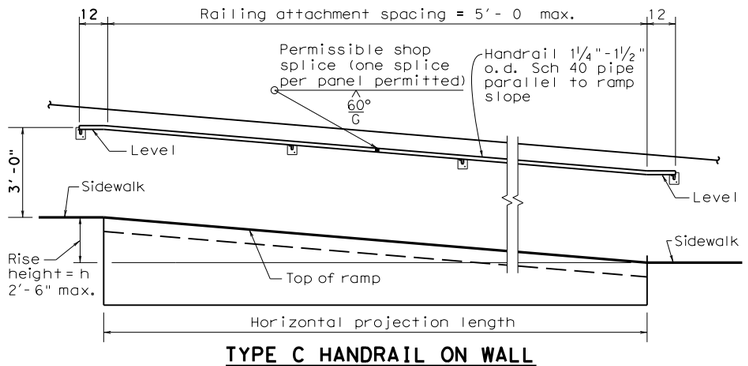

TYPE C HANDRAIL ON WALL

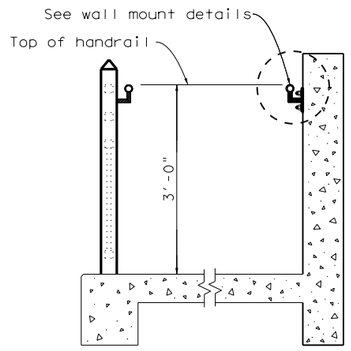

COMBINATION OF HANDRAIL ON WALL AND RAMP

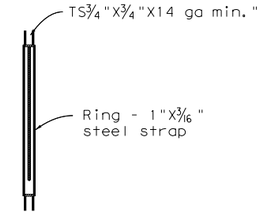

STAR SECTION B-B

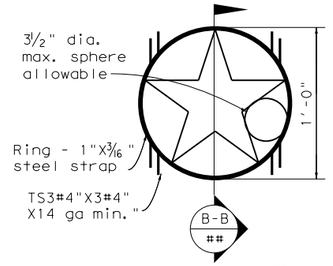

STAR DETAIL 1

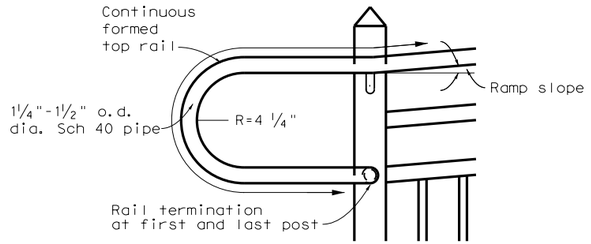

RAIL RETURN DETAIL ✳

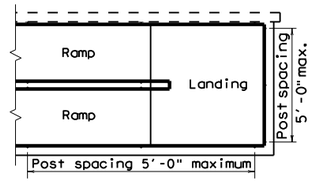

PLAN

MULTI-LEVEL RAMP

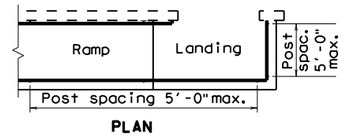

PLAN

SINGLE-LEVEL RAMP

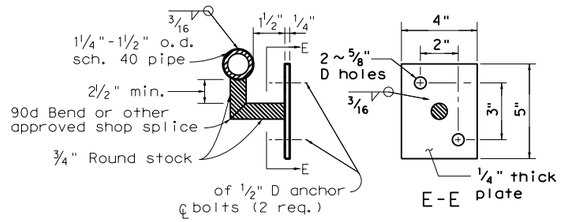

WALL MOUNT DETAILS

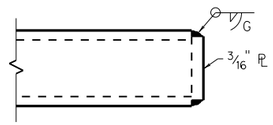

PIPE END DETAILS

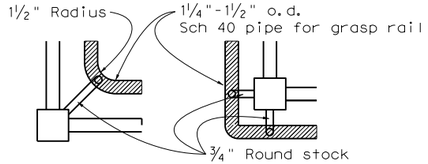

INSIDE CORNER | OUTSIDE CORNER

HANDRAIL ATTACHMENT DETAIL

R = Radius
D = Diameter

REVISED ON 3/23/2018 ADDED BOLTED POST OPTION
REVISED ON 2/28/2012 ADDED TYPE D HANDRAIL
REVISED ON 4/7/2006

Texas Department of Transportation

WACO DISTRICT HANDRAIL STANDARD

SHEET 1 OF 2

FILE:	DN:	CK:	DW:	CK:	NEG:	
© TxDOT 2006	DIST	FED REG	FEDERAL AID PROJECT #			SHEET
REVISIONS	WAC	6				170
	COUNTY		CONTROL	SECT	JOB	HIGHWAY
	MCLENNAN		0055	15	072	US 84

LEVELS DISPLAYED

1	3	4	5	6	7	8	9	10	11	12	13	14	15	16		
17	18	19	20	22	22	24	25	26	27	28	29	30	31	32		
33	34	35	36	37	38	39	40	41	42	43	44	45	46	47	48	
49	50	51	52	53	54	55	56	57	58	59	60	61	62	63		

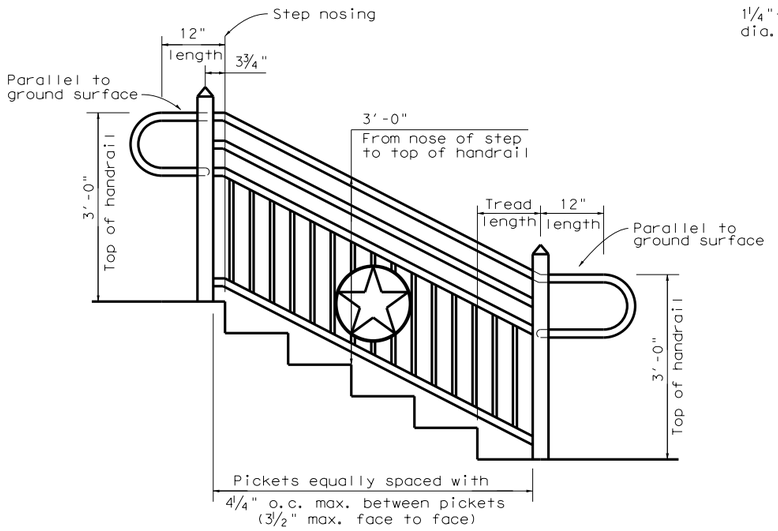

TYPE A HANDRAIL ON STAIRS

(Used in all cases unless the use will create a site obstruction)

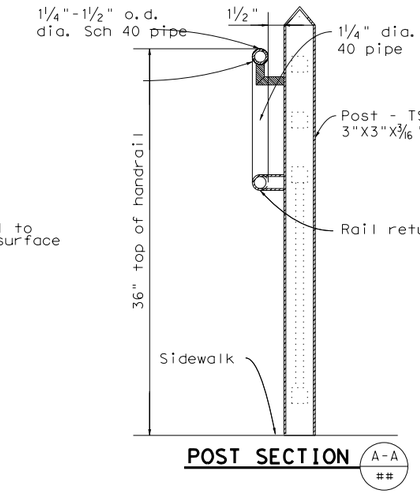

POST SECTION

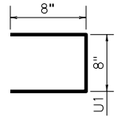

BARS U (#4)

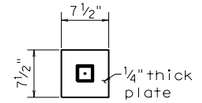

BASE PLATE DETAILS

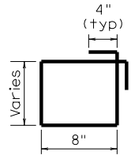

BARS S (#4)

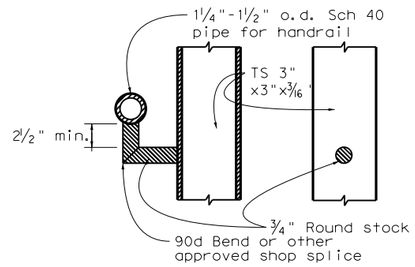

HANDRAIL TO POST MOUNT DETAILS

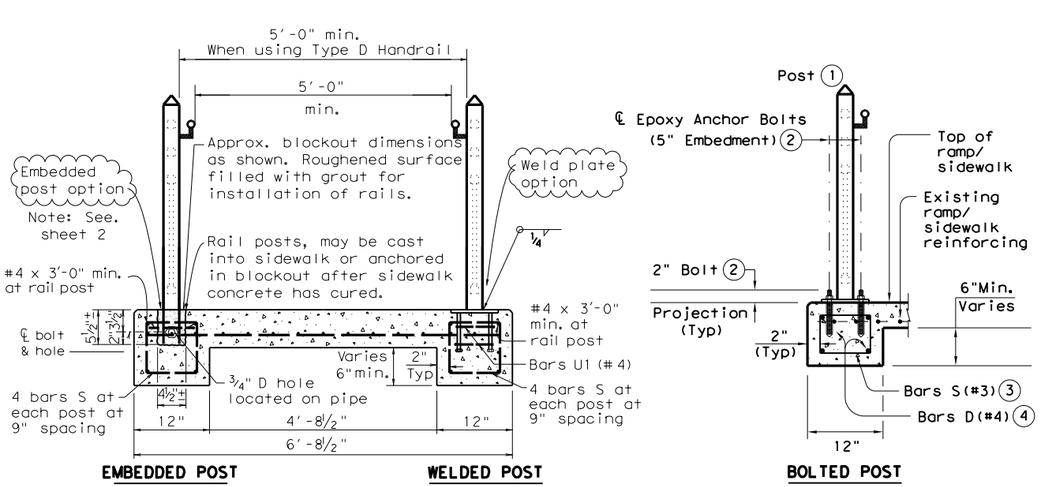

SECTION AT RAIL POST FOUNDATIONS

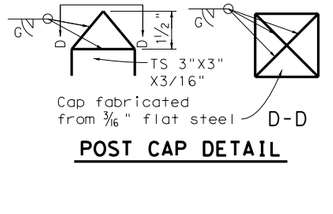

POST CAP DETAIL

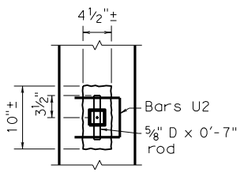

EMBEDDED POST ANCHOR

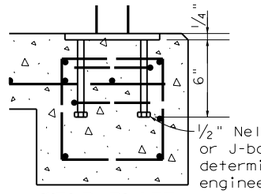

WELD PLATE ANCHOR

GENERAL NOTES

1. The designer should carefully evaluate the site conditions to determine the necessity and extent of the warrant for handrail.
2. The designer should use careful judgment in specifying the type of handrail to be used.
3. Type 'A' handrail is to be used in all cases, unless it's use will create a site obstruction, or it is adjacent to the wall of a building or a retaining wall.
4. Type 'B' handrail is to be used in cases where the Type 'A' handrail creates a site obstruction. If Type 'B' handrail is used, the ramp and/or sidewalk height above any adjacent surface shall not be more than 2'-6". Type 'B' handrail can be used adjacent to concrete block retaining walls ("Keystone " or similar type wall construction).
5. Type 'D' handrail is to be used only as a barrier.
6. Where handrail is placed adjacent to the wall of a building, Type 'B' handrail is to be used unless there is an agreement with the building owner to use Type 'A' handrail.
7. Handrail 'C' is to be used on concrete retaining walls, provided the retaining wall is TxDOT property. Otherwise, use handrail 'B', or for screening purposes, use handrail 'A'.
8. If handrail is placed on a retaining wall or the wall of a building, and the wall surface is irregular, ensure there is a minimum of 1-1/2" clearance between the wall surface and the handrail.
9. If handrail is used on a ramp for it's intended purpose of accessibility assistance, it must be placed on both sides of the ramp. If handrail is used only as a drop off or fall barrier to pedestrian traffic, it may be used as necessary on only one side of a ramp or sidewalk.
10. Design conforms to Texas Department of Licensing and Regulation (TDLR) Texas Accessibility Standards (TAS), Americans with Disabilities Act Accessibility guidelines (ADAAG), and AASHTO Specifications. Handrail must be installed in compliance with these standards and guidelines.
11. Handrails shall not rotate within their fittings.
12. Handrails shall be at a consistent height above ramp surface.
13. See Sidewalk and Ramp details and/or plan drawings for ramp slopes, dimensions, configurations, and reinforcing steel. This standard shows additional reinforcing steel required for handrail.
14. Weld plates are specifically to be used where there is a high possibility the handrail can be damaged by vehicles.
15. Measurement for payment will be the dimension between the centerline of the outside posts. The dimension of the rail return will not be included in the measurement for payment, but will be considered subsidiary to Item 450.
16. Material for posts and handrails shall be ASTM A53 Gr B, or A501. Weld plates shall be A36.
17. If the rail return creates a hazard or obstruction, it may be turned outward 90° to the direction of the handrail.
18. All components shall be painted in strict accordance to TxDOT specification Item 446, Cleaning and Painting Steel, System II, Class A Blast Cleaning. The paint shall be acrylic latex. Primer and paint shall be from the same manufacturer. The surface preparation shall meet the requirements of SSPC-SP 10. The paint color shall be selected by the TxDOT District Landscape Architect. A list of pre-approved structural steel paint manufacturers can be found on TxDOT's website.
19. All welds shall be 3/16" x 3/16" fillet full perimeter on all connections, unless otherwise shown on the plans.
20. Anchor bolts for handrail attached to a retaining wall shall be placed using an adhesive doweling system approved by the engineer. Anchor bolts shall have an allowable capacity of 2400 lbs in tension and 2300 lbs in shear. Installation of the anchor bolts, including hole depth and diameter, shall be in accordance with the manufacturer's recommendation. If required by the engineer, 3 of the first 10 anchors, and 5% of the remaining anchors shall be tested to 70% of the minimum yield. The contractor shall provide a suitable ram, pump, pressure gauge, and reaction system.
21. Anchor bolts for the attachment of handrail to concrete retaining wall shall conform to ASTM A36 or approved equal. Nuts for anchor bolts shall be ASTM A563 Gr A or better heavy hex. Threads for anchor bolts and nuts shall be rolled or cut threads of unified national coarse (UNC) thread series. Bolts and nuts shall have class 2A and 2B fit tolerances. Washers shall be included with each bolt.
22. Exposed edges of handrail and posts shall be rounded or chamfered to approximately 1/8" by grinding. Finished handrail system shall have no burrs.
23. Weld plates, other anchoring systems, rail returns, post caps, star emblem, and painting are to be included in the unit bid price for railing.
24. Erection drawings showing panel lengths, splice locations, rail post spacing, star emblem placement and anchoring selection shall be submitted to the engineer for approval prior to installation of any handrail component. Any handrail component installation prior to approval of erection drawings will be subject to rejection.

REVISED ON 3/23/2018 ADDED BOLTED POST OPTION
REVISED ON 2/28/2012 ADDED TYPE D HANDRAIL
REVISED ON 4/7/2006

(1) 2 ½" Dia. Standard Pipe (2.875" O.D., 0.203" wall thickness). Plumb all posts. See "Post Mount Detail" for crimping and trimming post to fit the diamenter of top rail. Provide holes as needed in post for galvanizing drainage and venting.

(2) See "General Notes" for anchor bolt information.

(3) Bars S(#3) spaced at 12" Max (Spaced 3" from outside edge of overall length of Ramp/Sidewalk).

(4) Provide 1 ½" end cover to Bars D(#4) from outside edge of overall length of Ramp/Sidewalk.

DISCLAIMER:
The use of this standard is governed by the "Texas Engineering Practice Act". No warranty of any kind is made by TxDOT for any purpose whatsoever. TxDOT assumes no responsibility for the conversion of this standard to other formats or for incorrect results or damages resulting from its use.

LEVELS DISPLAYED
1 2 3 4 5 6 7 8 9 10 11 12 13 14 15 16 17 18 19 20 21 22 23 24 25 26 27 28 29 30 31 32 33 34 35 36 37 38 39 40 41 42 43 44 45 46 47 48 49 50 51 52 53 54 55 56 57 58 59 60 61 62 63

Texas Department of Transportation

WACO DISTRICT HANDRAIL STANDARD

SHEET 2 OF 2

FILE:	DN:	CK:	DW:	CK:	NEG:	
©TxDOT 2006	DIST	FED REG	FEDERAL AID PROJECT •			SHEET
REVISIONS 4/7/2006 - NOTE #17 CHANGED (BRL)	WAC	6				171
	COUNTY		CONTROL	SECT	JOB	HIGHWAY
	MCLENNAN		0055	15	072	US 84

DISCLAIMER:
The use of this standard is governed by the "Texas Engineering Practice Act". No warranty of any kind is made by TxDOT for any purpose whatsoever. TxDOT assumes no responsibility for the conversion of this standard to other formats or for incorrect results or damages resulting from its use.

DATE: 12/21/2020
FILE: c:\pwworking\kha\pwprod\seth.rutledge\dms98478\cccg21.dgn

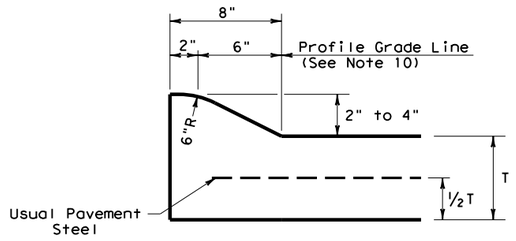

TYPE I CURB (MONOLITHIC)
2" - 4" HEIGHT

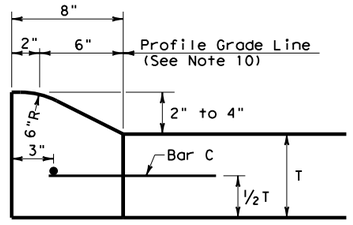

TYPE I CURB
2" - 4" HEIGHT

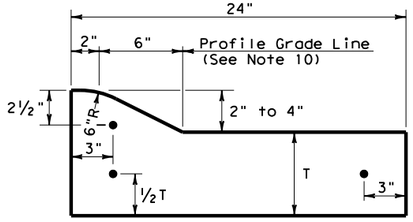

TYPE I CURB AND GUTTER
2" - 4" HEIGHT

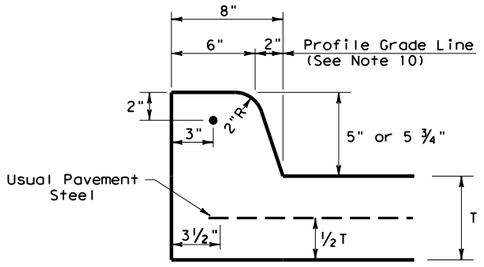

TYPE II CURB (MONOLITHIC)
5" - 5 ¾" HEIGHT

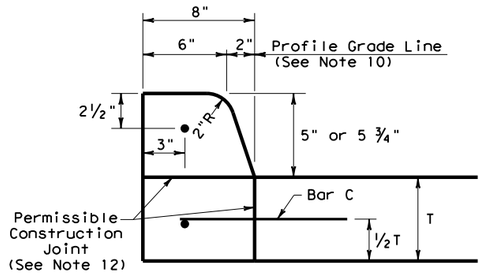

TYPE II CURB
5" - 5 ¾" HEIGHT

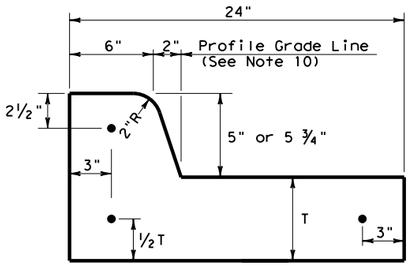

TYPE II CURB AND GUTTER
5" - 5 ¾" HEIGHT

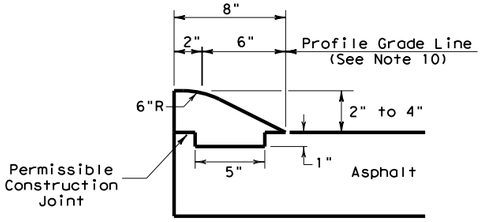

TYPE III CURB (KEYED)
2" - 4" HEIGHT

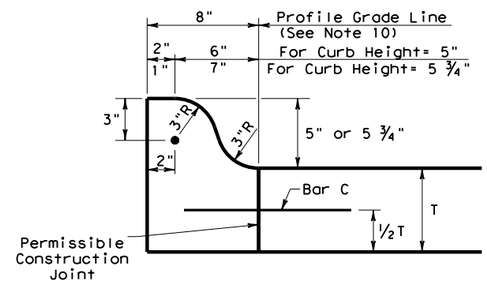

TYPE IIa CURB
5" - 5 ¾" HEIGHT

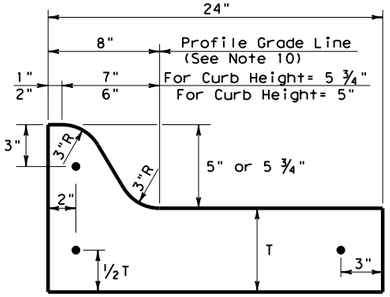

TYPE IIa CURB AND GUTTER
5" - 5 ¾" HEIGHT

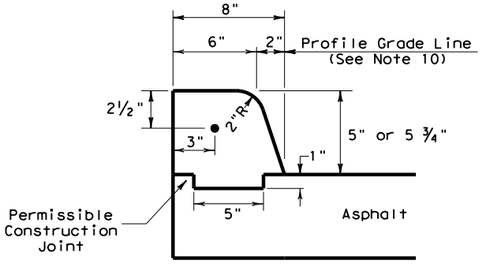

TYPE IV CURB (KEYED)
5" - 5 ¾" HEIGHT

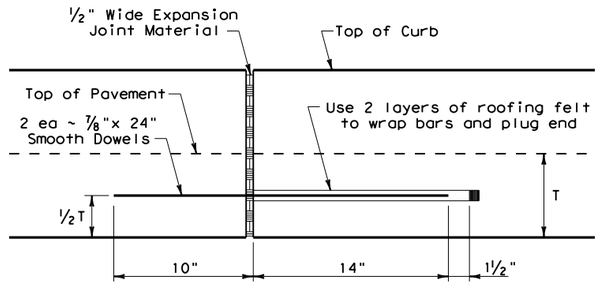

EXPANSION JOINT DETAIL

CURB TRANSITION NOTE:
Field conditions may require a longer or shorter transition, and shall be shown elsewhere in the plans, or as directed by the Engineer.

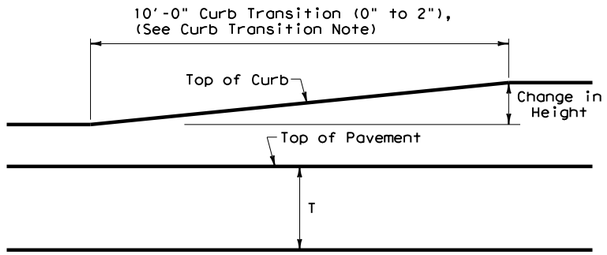

CURB TRANSITION
Note: To be paid for as Highest Curb

GENERAL NOTES

1. All materials and construction shall be in accordance with Item 529, "Concrete Curb, Gutter, and Combined Curb and Gutter."
2. Concrete shall be Class A.
3. When reinforcing bars are used, they shall be No.4 unless otherwise shown. The use of fiber reinforced concrete in lieu of reinforcing steel is acceptable. Use fibers meeting the requirements of DMS 4550, "Fibers for Concrete," and dose fibers in accordance with Material Producers List (MPL) "Fibers for Class A and B Concrete Applications."
4. Round exposed sharp edges with a rounding tool, to a minimum radius of ¼ inch.
5. All existing curbs and driveways to be removed shall be sawed or removed at existing joints.
6. Where concrete curb is to be placed on existing concrete pavement, Bar B may be drilled and the grouted in place, or may be inserted into fresh concrete.
7. Expansion and contraction joints shall be constructed to match pavement joints in all curbs and curb and gutter adjacent to jointed concrete pavement. Where placement of curb or curb and gutter is not adjacent to concrete pavement, expansion joints shall be provided at structures, curb returns at streets, and at locations directed by The Engineer.
8. Vertical and horizontal dowel bars and transverse reinforcing bars shall be placed at four feet C~C.
9. Dimension 'T' shown is the thickness of concrete pavement. When curb is installed adjacent to flexible pavement dimension 'T' is 8" maximum.
10. Usual profile grade line. Refer to typical sections and plan-profile sheets for exact locations.
11. One-half inch expansion joint material shall be provided where curb or curb and gutter is adjacent to sidewalk or riprap.
12. When horizontal permissible construction joints are used, the longitudinal pavement steel shall be placed in accordance with pavement details shown elsewhere in the plans. Reinforcing steel for curb section shall then conform to that required for concrete curb.
13. Bar B used as needed to support curb reinforcing steel during concrete placement.

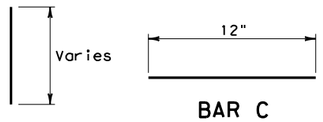

BAR B

BAR C

Texas Department of Transportation

Design Division Standard

CONCRETE CURB AND CURB AND GUTTER

CCCG-21

FILE: cccg21.dgn	DN: TXDOT	CK: AN	DW: SS	CK: KM
© TxDOT: FEBRUARY 2021 REVISIONS	CONT	SECT	JOB	HIGHWAY
	0055	15	072	US 84
	DIST	COUNTY		SHEET NO.
	WAC	MCLENNAN		173

DISCLAIMER:
The use of this standard is governed by the "Texas Engineering Practice Act". No warranty of any kind is made by TxDOT for any purpose whatsoever. TxDOT assumes no responsibility for the conversion of this standard to other formats or for incorrect results or damages resulting from its use.

DATE:
FILE:

GENERAL NOTES

TABLE NO. 1 LONGITUDINAL STEEL					
SLAB THICKNESS AND BAR SIZE		REGULAR STEEL BARS	FIRST SPACING AT EDGE OR JOINT	ADDITIONAL STEEL BARS AT TRANSVERSE CONSTRUCTION JOINT (SECTION X-X)	
T (IN.)	BAR SIZE	SPACING C (IN.)	SPACING a (IN.)	SPACING 2 X C (IN.)	LENGTH L (IN.)
7.0	#5	6.5	3 TO 4	13	50
7.5	#5	6.0	3 TO 4	12	50
8.0	#6	9.0	3 TO 4	18	50
8.5	#6	8.5	3 TO 4	17	50
9.0	#6	8.0	3 TO 4	16	50
9.5	#6	7.5	3 TO 4	15	50
10.0	#6	7.0	3 TO 4	14	50
10.5	#6	6.75	3 TO 4	13.5	50
11.0	#6	6.5	3 TO 4	13	50
11.5	#6	6.25	3 TO 4	12.5	50
12.0	#6	6.0	3 TO 4	12	50
12.5	#6	5.75	3 TO 4	11.5	50
13.0	#6	5.5	3 TO 4	11	50

TABLE NO. 2 TRANSVERSE STEEL AND TIE BARS						
SLAB THICKNESS (IN.)	TRANSVERSE STEEL		TIE BARS AT LONGITUDINAL CONTRACTION JOINT (SECTION Z-Z)		TIE BARS AT LONGITUDINAL CONSTRUCTION JOINT (SECTION Y-Y)	
	BAR SIZE	SPACING (IN.)	BAR SIZE	SPACING (IN.)	BAR SIZE	SPACING (IN.)
7.0 - 7.5	#5	48	#5	48	#5	24
8.0 - 13.0	#5	48	#6	48	#6	24

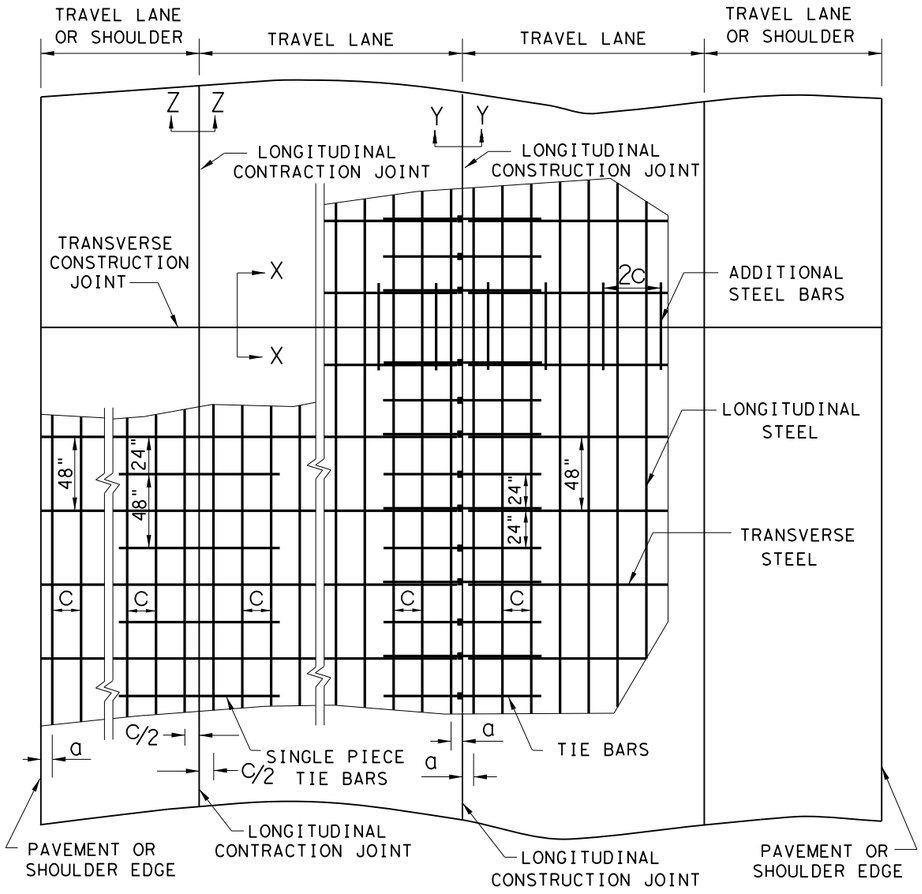

TYPICAL PAVEMENT LAYOUT

PLAN VIEW (NOT TO SCALE)

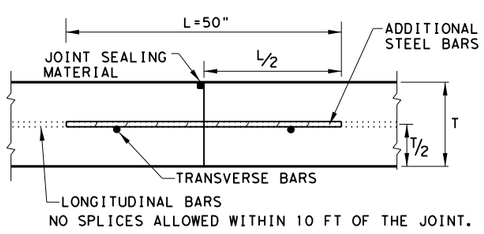

TRANSVERSE CONSTRUCTION JOINT

SECTION X - X

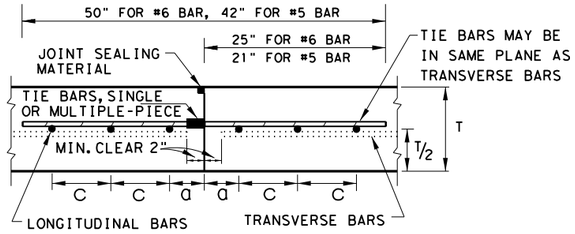

LONGITUDINAL CONSTRUCTION JOINT

SECTION Y - Y

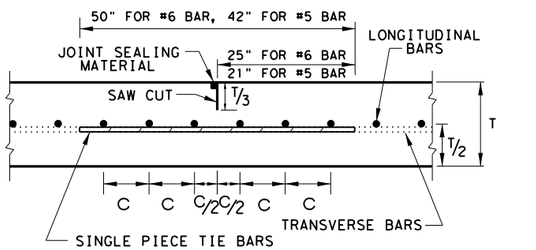

SINGLE PIECE TIE BARS SHOULD BE IN SAME PLANE AS TRANSVERSE BARS FOR 7.0 IN. TO 9.5 IN. SLABS. MAY BE PLACED ABOVE LONGITUDINAL BARS FOR 10.0 IN. TO 13.0 IN. SLABS.

LONGITUDINAL CONTRACTION JOINT

SECTION Z - Z

SHEET 1 OF 2

Texas Department of Transportation

Design Division Standard

CONTINUOUSLY REINFORCED CONCRETE PAVEMENT

ONE LAYER STEEL BAR PLACEMENT
T - 7 to 13 INCHES

CRCP(1)-20

FILE: crcp120.dgn	DN: TxDOT	CK: KM	DW: AN	CK: VP
© TxDOT: APRIL 2020	CONT	SECT	JOB	HIGHWAY
REVISIONS 10/10/2011 ADD GN #12 04/09/2013 REMOVE 6" AND 6.5" ADD CTE REQUIREMENTS 05/05/2017 CoTE AS RATED 4.3	0055	15	072	US 84
	DIST	COUNTY		SHEET NO.
	WAC	MCLENNAN		174

DISCLAIMER:
The use of this standard is governed by the "Texas Engineering Practice Act". No warranty of any kind is made by TxDOT for any purpose whatsoever. TxDOT assumes no responsibility for the conversion of this standard to other formats or for incorrect results or damages resulting from its use.

DATE: 12/21/2020
FILE: c:\pwworking\kho\pwprod\luke.fangman\dms98478\js14.dgn

METHOD B: JOINT SEALING COMPOUND

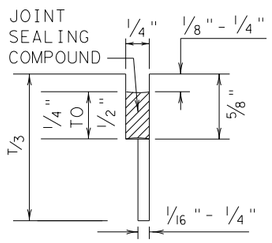

LONGITUDINAL SAWED CONTRACTION JOINT

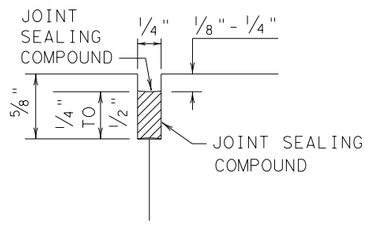

LONGITUDINAL OR TRANSVERSE CONSTRUCTION JOINT

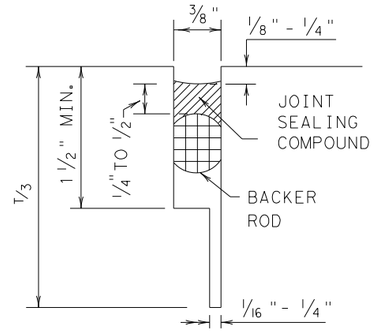

TRANSVERSE SAWED CONTRACTION JOINT

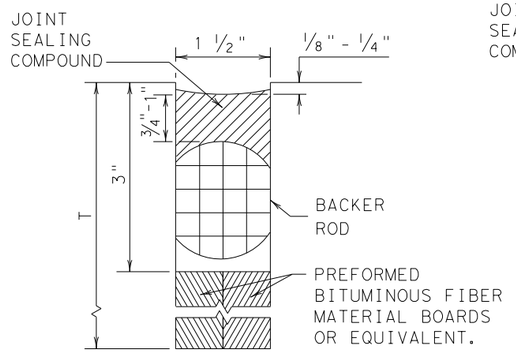

TRANSVERSE FORMED EXPANSION JOINT

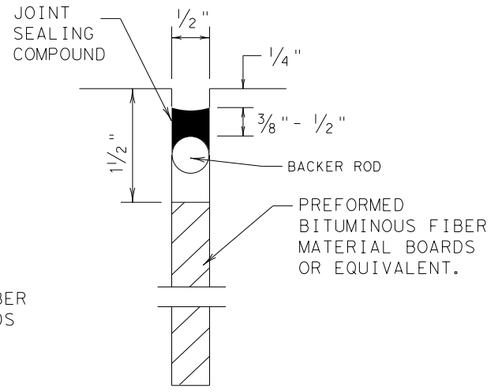

FORMED ISOLATION JOINT

METHOD A: PREFORMED COMPRESSION SEALS (PCS)(DMS-6310 CLASS 6)

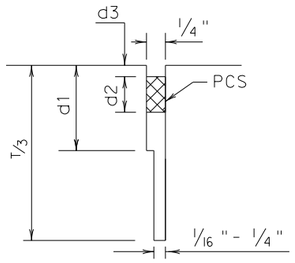

LONGITUDINAL SAWED CONTRACTION JOINT

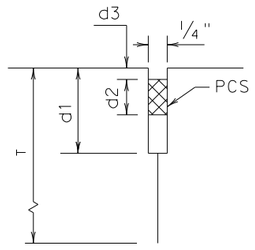

LONGITUDINAL CONSTRUCTION JOINT

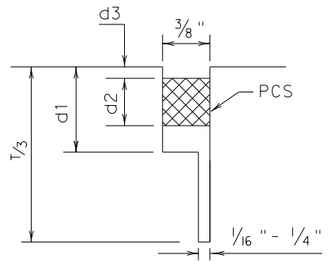

TRANSVERSE SAWED CONTRACTION JOINT

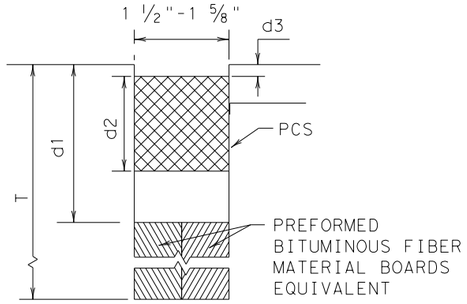

TRANSVERSE FORMED EXPANSION JOINT

GENERAL NOTES

1. UNLESS OTHERWISE SHOWN IN THE PLANS, EITHER METHOD "A" OR METHOD "B" MAY BE USED.
2. THE LOCATION OF JOINTS SHALL BE AS SHOWN ELSEWHERE IN THE PLANS.
3. THE JOINT RESERVOIR FOR SEALANT OR PCS SHALL BE SAWED UNLESS OTHERWISE SHOWN ON THE PLANS FOR THE LONGITUDINAL AND TRANSVERSE CONSTRUCTION JOINTS AND THE SAWED JOINTS.
4. DIMENSIONS d1, d2, AND d3 SHOWN IN METHOD A SHALL BE IN ACCORDANCE WITH THE PREFORMED COMPRESSION SEAL MANUFACTURER'S RECOMMENDATION.
5. REFER TO DMS-6310 "JOINT SEALANTS AND FILLERS" FOR THE CLASSIFICATIONS.
6. FOR SAWED LONGITUDINAL JOINT, LONGITUDINAL OR TRANSVERSE CONSTRUCTION JOINT, USE JOINT SEALANT CLASS 5 OR 8 UNLESS OTHERWISE SHOWN ON THE PLAN OR APPROVED.
7. FOR TRANSVERSE SAWED CONTRACTION, TRANSVERSE FORMED EXPANSION JOINT, AND ISOLATION JOINT USE JOINT SEALANT CLASS 5 OR 8 AT NEW JOINTS. USE JOINT SEALANT CLASS 4,5,7,OR 8 FOR MAINTAINING EXISTING JOINTS.
8. THE JOINTS SHALL BE CLEANED IN ACCORDANCE WITH THE ITEM 438 "CLEANING AND SEALING JOINTS" OR ITEM 713 "CLEANING AND SEALING JOINTS AND CRACKS (CONCRETE PAVEMENT)".
9. ISOLATION JOINTS ACCOMMODATE HORIZONTAL AND VERTICAL MOVEMENTS THAT OCCUR BETWEEN A PAVEMENT AND A STRUCTURE. ISOLATION JOINTS MAY BE USED FOR BRIDGE ABUTMENTS, INTERSECTIONS, CURB AND GUTTER, OLD AND NEW PAVEMENTS, OR AROUND DRAINAGE INLETS, MANHOLES, FOOTINGS AND LIGHTING STRUCTURES.

Texas Department of Transportation | Design Division Standard

CONCRETE PAVING DETAILS

JOINT SEALS

JS-14

FILE: js14.dgn	DN: TxDOT	DN: HC	DW: HC	CK: AN
©TxDOT: DECEMBER 2014	CONT	SECT	JOB	HIGHWAY
REVISIONS	0055	15	072	US 84
	DIST	COUNTY		SHEET NO.
	WAC	MCLENNAN		179

DISCLAIMER:
The use of this standard is governed by the "Texas Engineering Practice Act". No warranty of any kind is made by TxDOT for any purpose whatsoever. TxDOT assumes no responsibility for the conversion of this standard to other formats or for incorrect results or damages resulting from its use.

DATE: 12/21/2020
FILE: c:\pwworking\khot\pwprod\luke.fangman\dms98478\ped18.dgn

TYPE 1

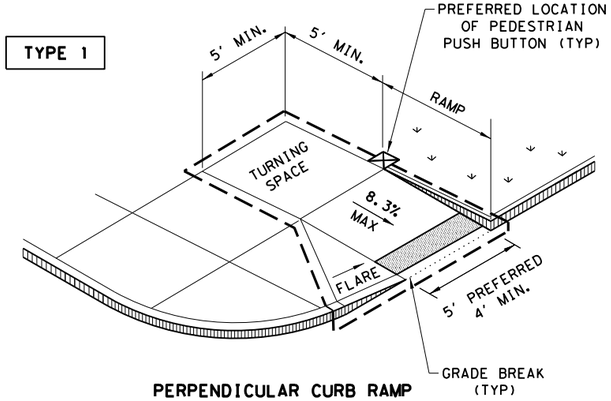

PERPENDICULAR CURB RAMP

TYPE 2

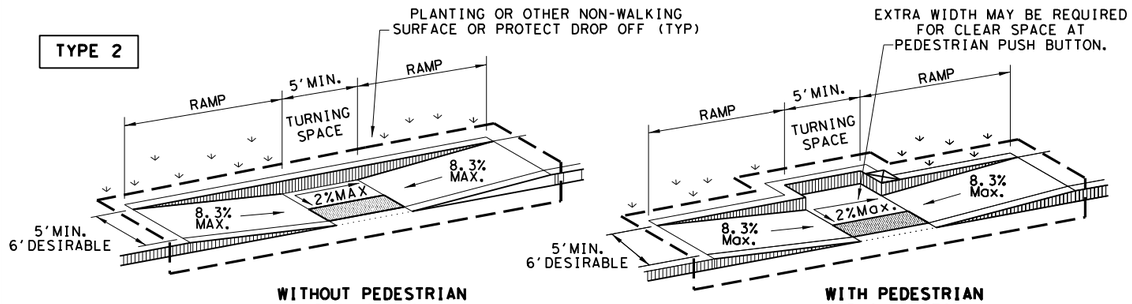

WITHOUT PEDESTRIAN PUSH BUTTON

WITH PEDESTRIAN PUSH BUTTON

PARALLEL CURB RAMP

TYPE 3

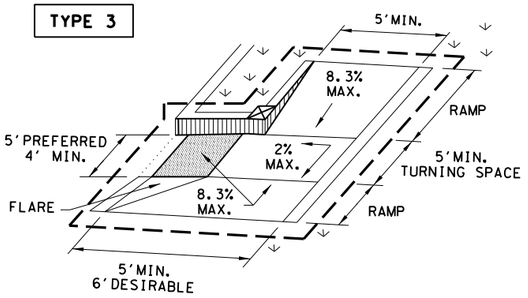

TYPE 6

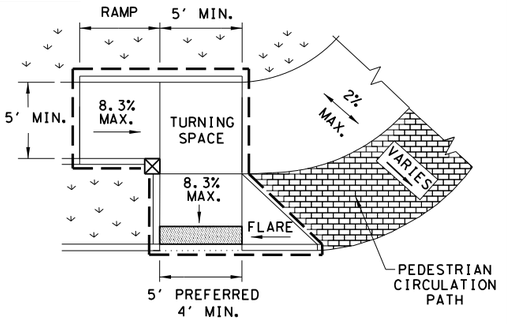

COMBINATION CURB RAMPS

TYPE 20

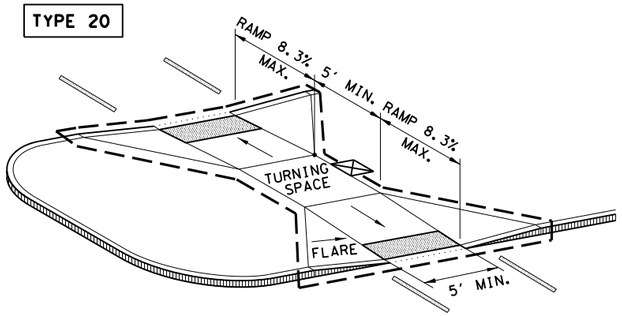

CURB RAMPS AT MEDIAN ISLANDS

TYPE 7
(SIDEWALK SET BACK FROM CURB)

CROSS SLOPE NOT TO EXCEED 2% ON ANY PORTION OF RAMP, TURNING SPACE OR TRANSITION TO STREET.

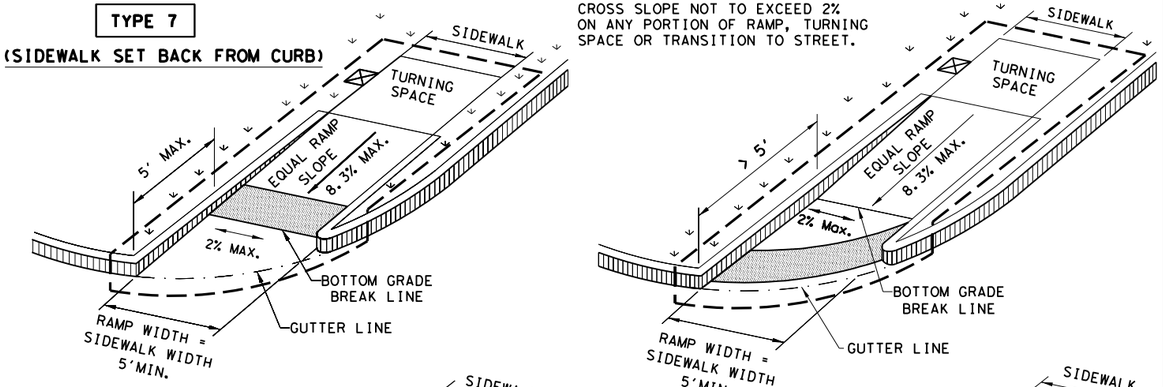

TYPE 10
(SIDEWALK ADJACENT TO CURB)

CROSS SLOPE NOT TO EXCEED 2% ON ANY PORTION OF RAMP, TURNING SPACE OR TRANSITION TO STREET.

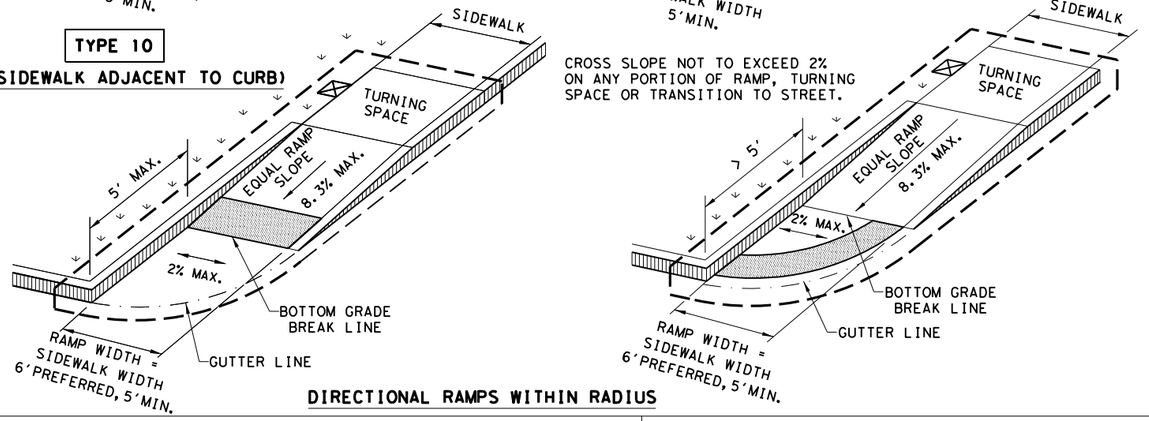

DIRECTIONAL RAMPS WITHIN RADIUS

TYPE 5

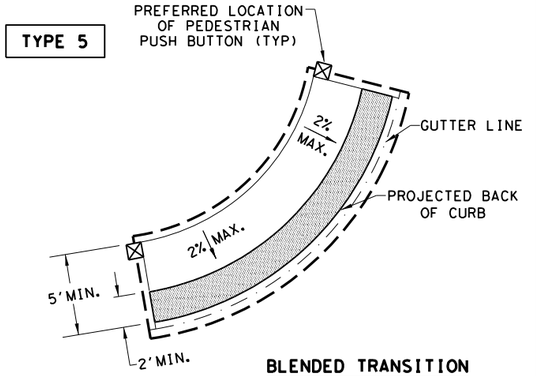

BLENDED TRANSITION
(FLUSH LANDING)

TYPE 21

INSTALL DETECTABLE WARNING SURFACE AT EACH END OF THE CUT-THROUGH RAMP WITH A MINIMUM 2' USUAL SIDEWALK SURFACE BETWEEN. IF MEDIAN IS LESS THAN 6' WIDE, ELIMINATE DETECTABLE WARNING SURFACES.

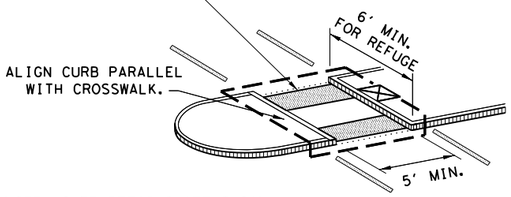

NOTE: CURB DETAILS ARE SHOWN ELSEWHERE IN THE PLANS.

TYPE 22

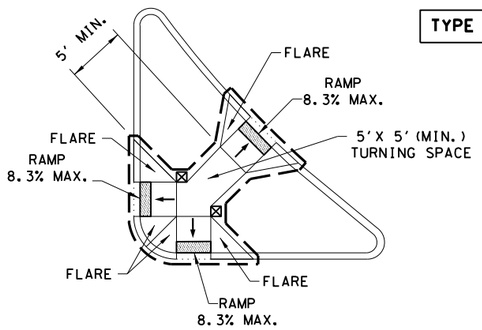

COMBINATION ISLAND RAMPS

BOTTOM GRADE BREAK OF CURB RAMP WILL NORMALLY BE AT GUTTER LINE. SURFACE SLOPES AT GRADE BREAKS SHALL BE FLUSH.

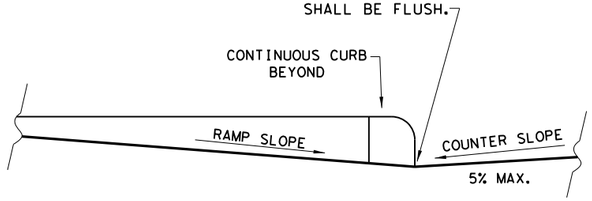

TYPICAL SECTION OF PERPENDICULAR CURB RAMP AT CONNECTION TO ROADWAY

NOTES / LEGEND:

SEE GENERAL NOTES ON SHEET 2 OF 4 FOR MORE INFORMATION.

DENOTES PLANTING OR NON-WALKING SURFACE NOT PART OF PEDESTRIAN CIRCULATION PATH.

DETECTABLE WARNING SURFACE

DENOTES PREFERRED LOCATION OF PEDESTRIAN PUSH BUTTON IF APPLICABLE.

GUTTER LINE

GRADE BREAK

RAMP LIMITS OF PAYMENT

Texas Department of Transportation

Design Division Standard

PEDESTRIAN FACILITIES CURB RAMPS

PED-18

FILE: ped18	DN: TxDOT	DW: VP	CK: KM	CK: PK & JG
© TxDOT: MARCH, 2002	CONT	SECT	JOB	HIGHWAY
REVISIONS	0055	15	072	US 84
REVISED 08,2005 REVISED 06,2012 REVISED 01,2018	DIST	COUNTY		SHEET NO.
	WAC	MCLENNAN		180

DISCLAIMER:
The use of this standard is governed by the "Texas Engineering Practice Act". No warranty of any kind is made by TxDOT for any purpose whatsoever. TxDOT assumes no responsibility for the conversion of this standard to other formats or for incorrect results or damages resulting from its use.

DATE: 12/21/2020
FILE: c:\pwworking\kha\pwproa\luke.fangman\dms98478\ped18.dgn

GENERAL NOTES

CURB RAMPS

1. Install a curb ramp or blended transition at each pedestrian street crossing.
2. All slopes shown are maximum allowable. Cross slopes of 1.5% and lesser running should be used. Adjust curb ramp length or grade of approach sidewalks as directed.
3. Maximum allowable cross slope on sidewalk and curb ramp surfaces is 2%.
4. The minimum sidewalk width is 5'. Where the sidewalk is adjacent to the back of curb, a 6' sidewalk width is desirable. Where a 5' sidewalk cannot be provided due to site constraints, sidewalk width may be reduced to 4' for short distances. 5'x 5' passing areas at intervals not to exceed 200' are required.
5. Turning Spaces shall be 5'x 5' minimum. Cross slope shall be maximum 2%.
6. Clear space at the bottom of curb ramps shall be a minimum of 4'x 4' wholly contained within the crosswalk and wholly outside the parallel vehicular travel path.
7. Provide flared sides where the pedestrian circulation path crosses the curb ramp. Flared sides shall be sloped at 10% maximum, measured parallel to the curb. Returned curbs may be used only where pedestrians would not normally walk across the ramp, either because the adjacent surface is planted, substantially obstructed, or otherwise protected.
8. Additional information on curb ramp location, design, light reflective value and texture may be found in the latest draft of the Proposed Guidelines for Pedestrian Facilities in the Public Right of Way (PROWAG) as published by the U.S. Architectural and Transportation Barriers Compliance Board (Access Board).
9. To serve as a pedestrian refuge area, the median should be a minimum of 6' wide, measured from back of curbs. Medians should be designed to provide accessible passage over or through them.
10. Small channelization islands, which do not provide a minimum 5'x 5' landing at the top of curb ramps, shall be cut through level with the surface of the street.
11. Crosswalk dimensions, crosswalk markings and stop bar locations shall be as shown elsewhere in the plans. At intersections where crosswalk markings are not required, curb ramps shall align with theoretical crosswalks unless otherwise directed.
12. Provide curb ramps to connect the pedestrian access route at each pedestrian street crossing. Handrails are not required on curb ramps.
13. Curb ramps and landings shall be constructed and paid for in accordance with Item 531 "Sidewalks".
14. Place concrete at a minimum depth of 5" for ramps, flares and landings, unless otherwise directed.
15. Furnish and install No. 3 reinforcing steel bars at 18" o.c. both ways, unless otherwise directed.
16. Provide a smooth transition where the curb ramps connect to the street.
17. Curbs shown on sheet 1 within the limits of payment are considered part of the curb ramp for payment, whether it is concrete curb, gutter, or combined curb and gutter.
18. Existing features that comply with applicalble standards may remain in place unless otherwise shown on the plans.

DETECTABLE WARNING MATERIAL

19. Curb ramps must contain a detectable warning surface that consists of raised truncated domes complying with PROWAG. The surface must contrast visually with adjoining surfaces, including side flares. Furnish and install an approved cast-in-place dark brown or dark red detectable warning surface material adjacent to uncolored concrete, unless specified elsewhere in the plans.
20. Detectable Warning Materials must meet TxDOT Departmental Materials Specification DMS 4350 and be listed on the Material Producer List. Install products in accordance with manufacturer's specifications.
21. Detectable warning surfaces must be firm, stable and slip resistant.
22. Detectable warning surfaces shall be a minimum of 24 inches in depth in the direction of pedestrian travel, and extend the full width of the curb ramp or landing where the pedestrian access route enters the street.
23. Detectable warning surfaces shall be located so that the edge nearest the curb line is at the back of curb and neither end of that edge is greater than 5 feet from the back of curb. Detectable warning surfaces may be curved along the corner radius.
24. Shaded areas on Sheet 1 of 4 indicate the approximate location for the detectable warning surface for each curb ramp type.

DETECTABLE WARNING PAVERS (IF USED)

25. Furnish detectable warning paver units meeting all requirements of ASTM C-936, C-33. Lay in a two by two unit basket weave pattern or as directed.
26. Lay full-size units first followed by closure units consisting of at least 25 percent (25%) of a full unit. Cut detectable warning paver units using a power saw.

SIDEWALKS

27. Provide clear ground space at operable parts, including pedestrian push buttons. Operable parts shall be placed within unobstructed reach range specified in PROWAG section R406.
28. Place traffic signal or illumination poles, ground boxes, controller boxes, signs, drainage facilities and other items so as not to obstruct the pedestrian access route or clear ground space.
29. Street grades and cross slopes shall be as shown elsewhere in the plans.
30. Changes in level greater than 1/4 inch are not permitted.
31. The least possible grade should be used to maximize accessibility. The running slope of sidewalks and crosswalks within the public right of way may follow the grade of the parallel roadway. Where a continuous grade greater than five percent (5%) must be provided, handrails may be desirable to improve accessibility. Handrails may also be needed to protect pedestrians from potentially hazardous conditions. If provided, handrails shall comply with PROWAG R409.
32. Handrail extensions shall not protrude into the usable landing area or into intersecting pedestrian routes.
33. Driveways and turnouts shall be constructed and paid for in accordance with Item "Intersections, Driveways and Turnouts". Sidewalks shall be constructed and paid for in accordance with Item, "Sidewalks".
34. Sidewalk details are shown elsewhere in the plans.

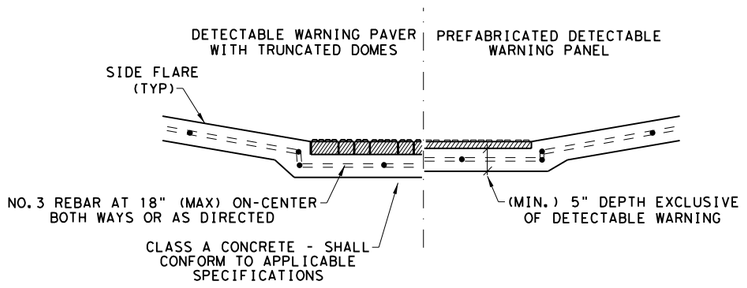

SECTION VIEW DETAIL
CURB RAMP AT DETECTIBLE WARNINGS

DETECTABLE WARNING SURFACE DETAILS

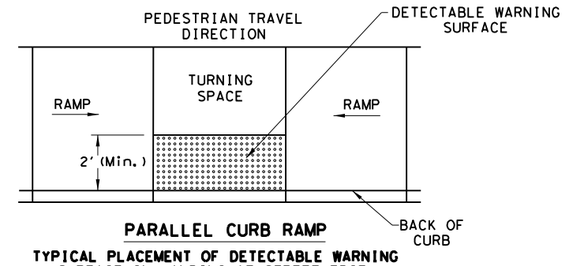

PARALLEL CURB RAMP
TYPICAL PLACEMENT OF DETECTABLE WARNING SURFACE ON LANDING AT STREET EDGE.

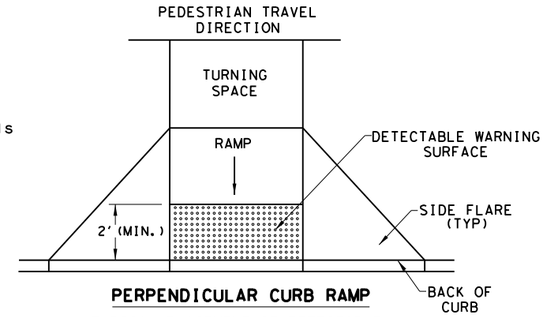

PERPENDICULAR CURB RAMP
TYPICAL PLACEMENT OF DETECTABLE WARNING SURFACE ON SLOPING RAMP RUN.

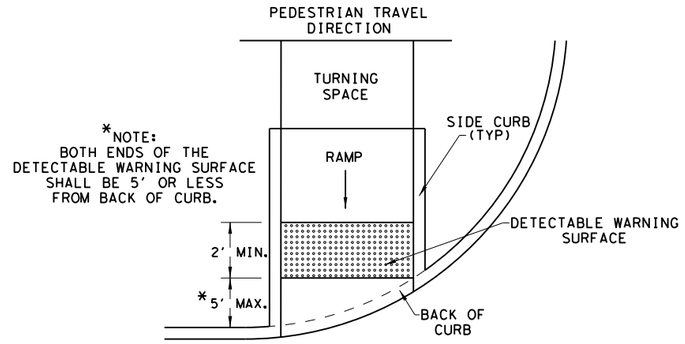

DIRECTIONAL CURB RAMP
TYPICAL PLACEMENT OF DETECTABLE WARNING SURFACE ON SLOPING RAMP RUN.

Texas Department of Transportation | Design Division Standard

PEDESTRIAN FACILITIES CURB RAMPS

PED-18

FILE: ped18	DN: TxDOT		DW: VP	CK: KM	CK: PK & JG
© TxDOT: MARCH, 2002	CONT	SECT	JOB		HIGHWAY
REVISIONS	0055	15	072		US 84
REVISED 08,2005 REVISED 06,2012 REVISED 01,2018	DIST	COUNTY			SHEET NO.
	WAC	MCLENNAN			181

DISCLAIMER:
The use of this standard is governed by the "Texas Engineering Practice Act". No warranty of any kind is made by TxDOT for any purpose whatsoever. TxDOT assumes no responsibility for the conversion of this standard to other formats or for incorrect results or damages resulting from its use.

DATE: 12/21/2020
FILE: c:\pwworking\kha\pwproot\luke.fangman\dms98478\ped18.dgn

SIDEWALK TREATMENT AT DRIVEWAYS

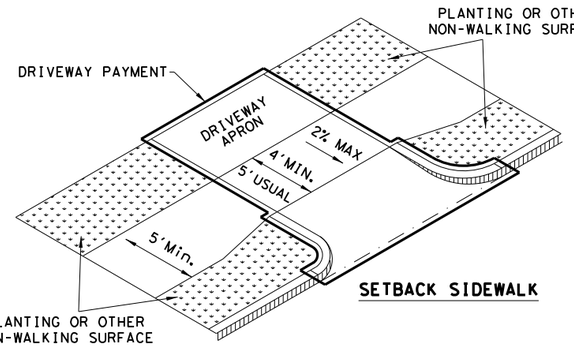

SETBACK SIDEWALK

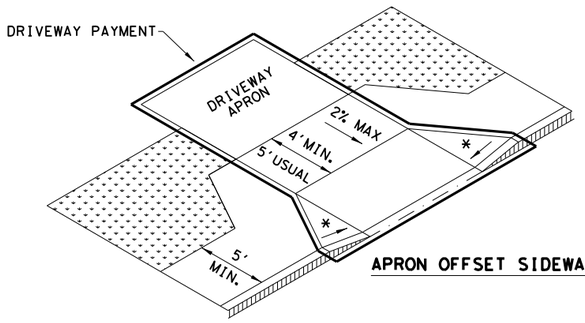

APRON OFFSET SIDEWALK

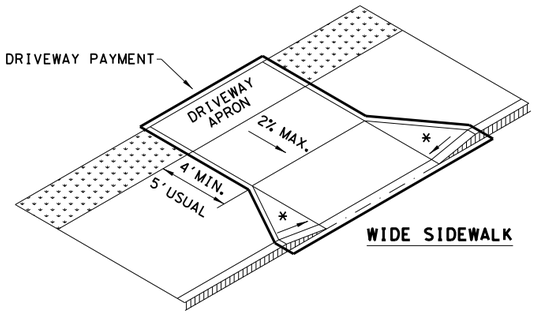

WIDE SIDEWALK

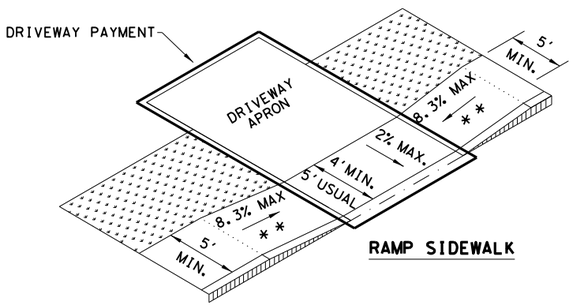

RAMP SIDEWALK

NOTES:

* WHERE DRIVEWAYS CROSS THE PEDESTRIAN ROUTE, SIDES SHALL BE FLARED AT 10% MAX SLOPE.

* * IF CURB HEIGHT IS GREATER THAN 6 INCHES, USE GRADE LESS THAN OR EQUAL TO 5%. HANDRAIL AND DETECTABLE WARNING ARE NOT REQUIRED.

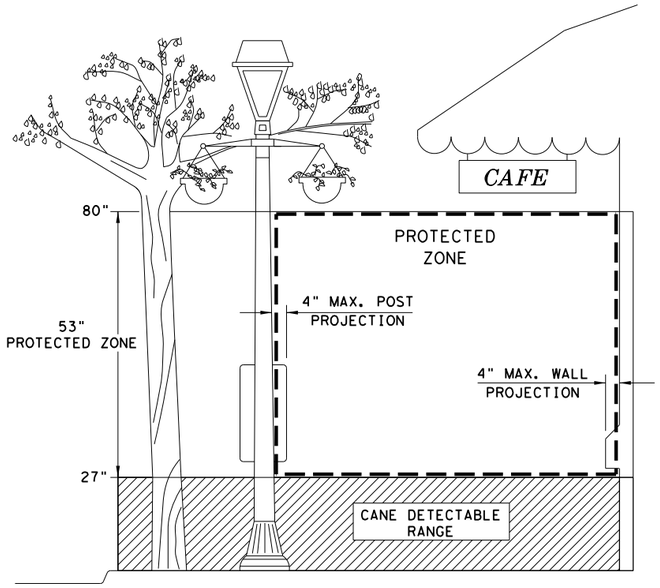

PROTECTED ZONE

NOTE: IN PEDESTRIAN CIRCULATION AREA, MAXIMUM 4" PROJECTION FOR POST OR WALL MOUNTED OBJECTS BETWEEN 27" AND 80" ABOVE THE SURFACE.

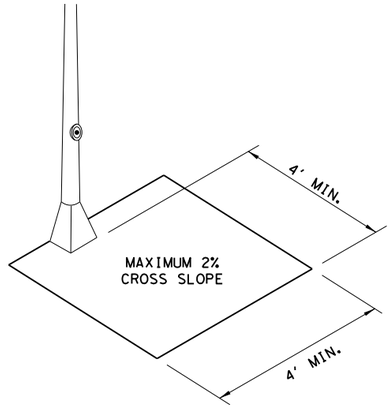

CLEAR SPACE ADJACENT TO PEDESTRIAN PUSH BUTTON

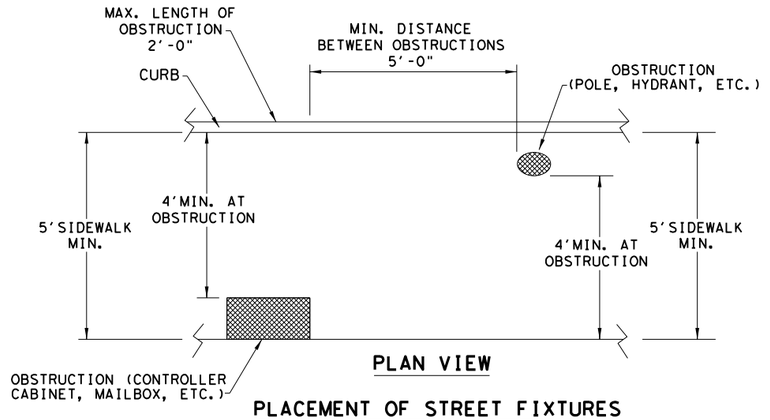

PLAN VIEW

PLACEMENT OF STREET FIXTURES

NOTE: ITEMS NOT INTENDED FOR PUBLIC USE. MINIMUM 4' X 4' CLEAR GROUND SPACE REQUIRED AT PUBLIC USE FIXTURES.

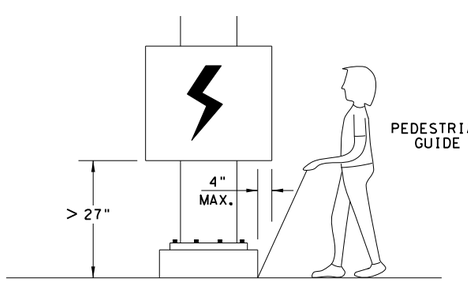

WHEN AN OBSTRUCTION OF A HEIGHT GREATER THAN 27" FROM THE SURFACE WOULD CREATE A PROTRUSION OF MORE THAN 4" INTO THE PEDESTRIAN CIRCULATION AREA, CONSTRUCT ADDITIONAL CURB OR FOUNDATION AT THE BOTTOM TO PROVIDE A MAXIMUM 4" OVERHANG.

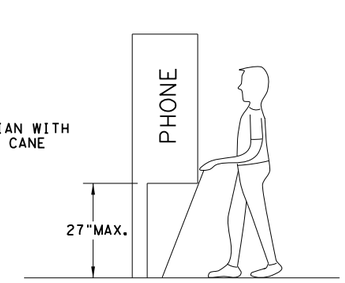

PROTRUDING OBJECTS OF A HEIGHT ≤ 27" ARE DETECTABLE BY CANE AND DO NOT REQUIRE ADDITIONAL TREATMENT.

DETECTION BARRIER FOR VERTICAL CLEARANCE < 80"

Texas Department of Transportation

Design Division Standard

PEDESTRIAN FACILITIES CURB RAMPS

PED-18

FILE: ped18	DN: TxDOT	DW: VP	CK: KM	CK: PK & JG	
© TxDOT: MARCH, 2002	CONT	SECT	JOB	HIGHWAY	
REVISIONS	0055	15	072	US 84	
REVISED 08,2005 REVISED 06,2012 REVISED 01,2018	DIST	COUNTY		SHEET NO.	
	WAC	MCLENNAN		182	

DISCLAIMER:
The use of this standard is governed by the "Texas Engineering Practice Act". No warranty of any kind is made by TxDOT for any purpose whatsoever. TxDOT assumes no responsibility for the conversion of this standard to other formats or for incorrect results or damages resulting from its use.

DATE: 12/21/2020
FILE: c:\pwworking\kho\pwprod\luke.fangman\dms98478\ped18.dgn

TYPICAL CROSSING LAYOUTS

SEE SHEET 1 OF 4 FOR DETAILS AND DIMENSIONS

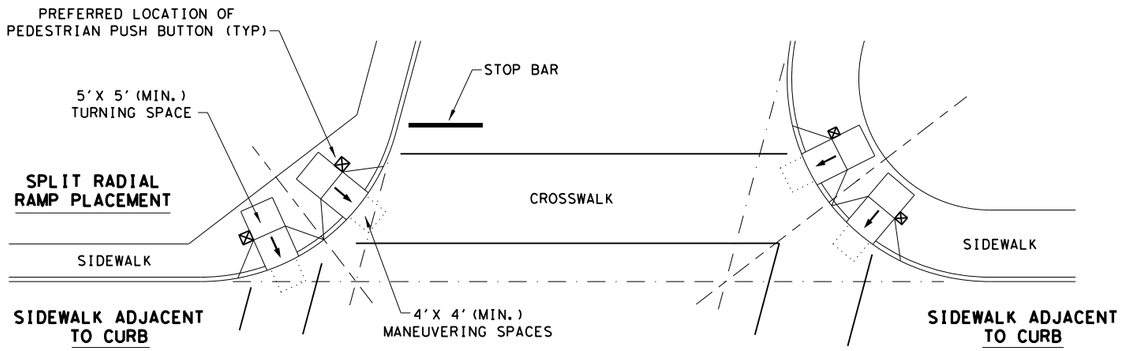

SKEWED INTERSECTION WITH "LARGE" RADIUS

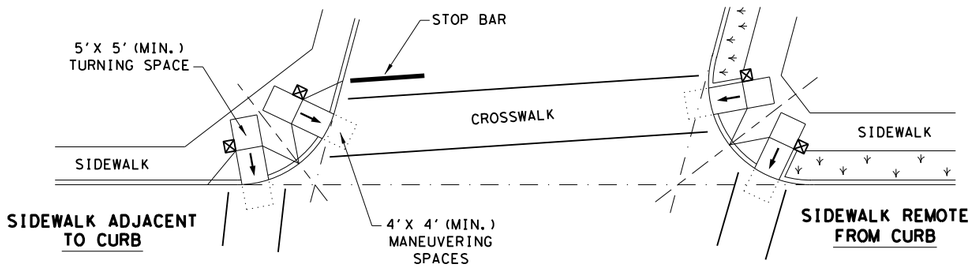

SKEWED INTERSECTION WITH "SMALL" RADIUS

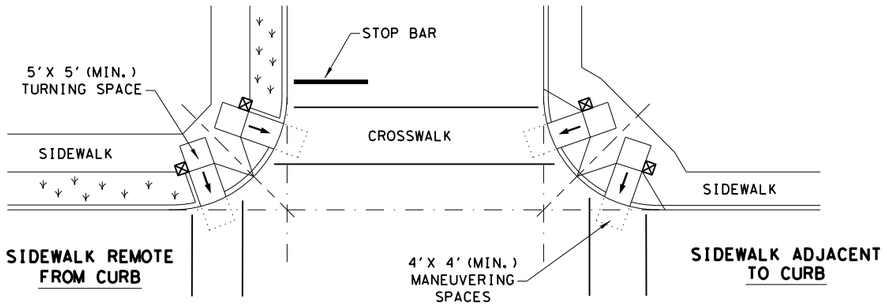

NORMAL INTERSECTION WITH "SMALL" RADIUS

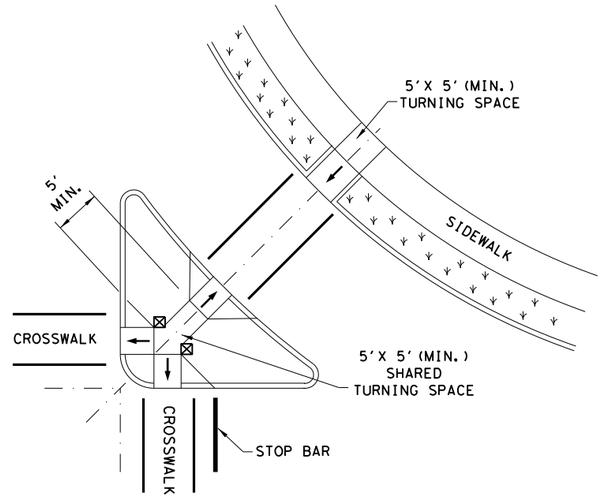

AT INTERSECTION
W/FREE RIGHT TURN & ISLAND

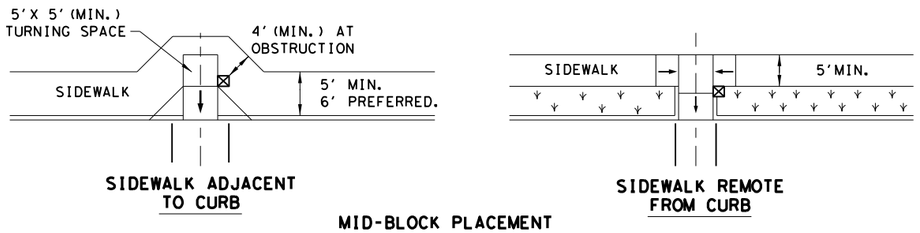

MID-BLOCK PLACEMENT
PERPENDICULAR RAMPS

LEGEND:

SHOWS DOWNWARD SLOPE. →

DENOTES PREFERRED LOCATION OF PEDESTRIAN PUSH BUTTON (IF APPLICABLE). ☒

DENOTES PLANTING OR NON-WALKING SURFACE NOT PART OF PEDESTRIAN CIRCULATION PATH.

Texas Department of Transportation — Design Division Standard

PEDESTRIAN FACILITIES CURB RAMPS

PED-18

FILE: ped18	DN: TxDOT	DW: VP	CK: KM	CK: PK & JG
© TxDOT: MARCH, 2002	CONT	SECT	JOB	HIGHWAY
REVISIONS	0055	15	072	US 84
REVISED 08,2005 REVISED 06,2012 REVISED 01,2018	DIST	COUNTY		SHEET NO.
	WAC	MCLENNAN		183

DISCLAIMER:
The use of this standard is governed by the "Texas Engineering Practice Act". No warranty of any kind is made by TxDOT for any purpose whatsoever. TxDOT assumes no responsibility for the conversion of this standard to other formats or for incorrect results or damages resulting from its use.

REFLECTOR UNIT SIZES FOR DELINEATORS AND OBJECT MARKERS

	SIZE 1	SIZE 2	SIZE 3	SIZE 4
DEVICE	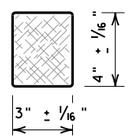	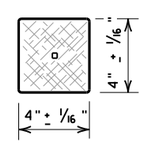	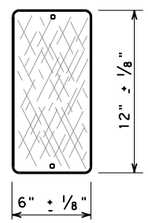	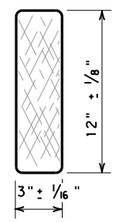
SHEETING	Yellow, White or Red Type B or C reflective sheeting			
NOTE	1. Size 1 and 4 - Direct applied reflective sheeting for use on flexible post (flx). 2. Size 2 and 3 - For use on wing channel (wc) post only. Use approved metal, plastic or fiberglass backplate with 17/64" mounting holes.			

DELINEATORS

	SINGLE		DOUBLE	
DEVICE	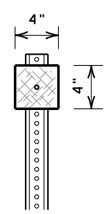	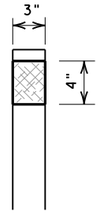	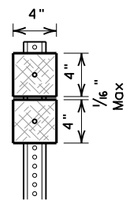	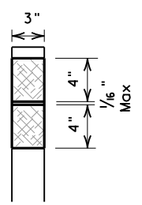
	1-Size 2 reflector unit	1-Size 1 reflector unit	2-Size 2 reflector units	2-Size 1 reflector units
SHEETING	Yellow, White or Red Type B or C Reflective Sheeting			
POST TYPE	WC	YFLX, WFLX	WC	YFLX, WFLX
MOUNT TYPE	GND	GND, SRF	GND	GND, SRF

D & OM DESCRIPTIVE CODES

INSTL DEL ASSM (D-XX)SZ X (XXXX)XXX(XX)

NUMBER OF REFLECTORS
S = Single
D = Double

COLOR OF REFLECTORS
W = White
Y = Yellow
R = Red

REFLECTOR UNIT SIZE
1 or 2

TYPE OF POST OR DELINEATOR
WC = Wing Channel Post
YFLX = Yellow Flexible Post
WFLX = White Flexible Post
BRF = Barrier Reflector

TYPE OF MOUNT
GND = Embedded (drivable or set in concrete)
CTB = Concrete Barrier Mount
GF1 or GF2 = Guard Fence Attachment
SRF = Surface Mount

DIRECTION
If Required
BI = Bi-Directional
BR = Bi-Directional with red on back

INSTL OM ASSM (OM-XX) (XXXX)XXX(XX)

TYPE OF OBJECT MARKER
1, 2, 3, or 4

NUMBER OF REFLECTORS OR DIRECTION
X = 3-Size 2 reflector units (Type 2 only)
Y = 1-Size 3 reflector unit (Type 2 only)
Z = 3-Size 1 or 1-Size 4 reflector unit(s) (Type 2 only)
L = Left Side (Type 3 Object Marker only)
R = Right Side (Type 3 Object Marker only)
C = Center (Type 3 Object Marker only)

TYPE OF POST
WC = Wing Channel Post
WFLX = White Flexible Post
TWT = Thin Walled Tubing

TYPE OF MOUNT
GND = Embedded (drivable)
SRF = Surface Mount
WAS = Wedge Anchor Steel
WAP = Wedge Anchor Plastic

DIRECTION
If Required
BI = Bi-Directional

OBJECT MARKERS

	Type 1 (OM-1)	Type 2 (OM-2)			Type 3 (OM-3)			Type 4 (OM-4)
	OM-1	OM-2X	OM-2Y	OM-2Z	OM-3L	OM-3R	OM-3C	OM-4
DEVICE	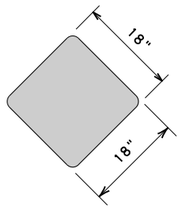	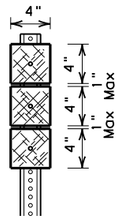	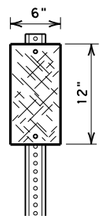	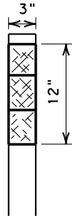	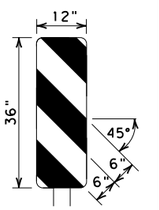	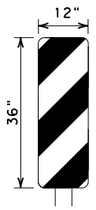	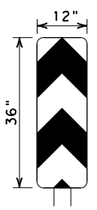	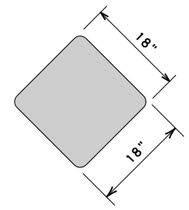
		3-Size 2 reflector units	1-Size 3 reflector unit	3-Size 1 reflector units or 1-Size 4 reflector unit				
SHEETING	Yellow-Type B_{FL} or C_{FL} Sheeting	Yellow - Type B or C Sheeting			Alternating acrylic black and retroflective yellow - Type B_{FL} or C_{FL} Sheeting			Red -Type B_{FL} or C_{FL} Sheeting
POST TYPE	TWT	WC	WC	WFLX	TWT			TWT
MOUNT TYPE	WAS, WAP	GND	GND	GND, SRF	WAS, WAP			WAS, WAP

DEPARTMENTAL MATERIAL SPECIFICATIONS

FLEXIBLE DELINEATOR & OBJECT MARKER POSTS (EMBEDDED & SURFACE MOUNT TYPES)	DMS-4400
SIGN FACE MATERIALS	DMS-8300
DELINEATORS, OBJECT MARKERS AND BARRIER REFLECTORS	DMS-8600

BARRIER REFLECTORS (BRF)

	GF1	GF2	CTB
DEVICE	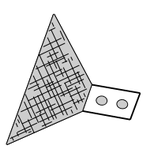	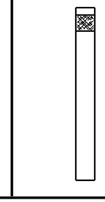	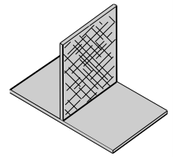
	1. Barrier reflectors shall meet the requirements of DMS 8600. 2. Approved Barrier Reflectors are listed on the "Barrier Reflectors" Material Producer List at: www.txdot.gov.		
SHEETING	Yellow, White, Red		
NOTE	1. Reflective sheeting shall have a minimum dimension of 3 inches and minimum surface area of 9 square inches.		

CHEVRONS

DEVICE

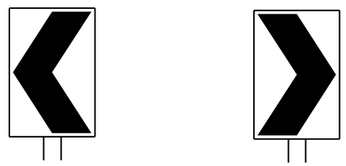

W1-8

SIZE (W x L)	18"x 24" (Conventional)	24"x 30" (Conventional Oversize)	30"x 36" (Expressway)	36" x 48" (Freeway)
MOUNTING HEIGHT	4'-0" or 7'-0"		7'-0" Only	

NOTE

1. CHEVRON (W1-8) signs and ONE DIRECTION LARGE ARROW (W1-6) Signs shall be installed per Sign Mounting Details (SMD) Standard Sheets and paid under Item 644 (Small Roadside Sign Assemblies).
2. When there is a need to increase conspicuity, the Texas version of the ONE DIRECTION LARGE ARROW sign (W1-9T) may be used instead of the ONE DIRECTION LARGE ARROW (W1-6).

ONE DIRECTION LARGE ARROW

DEVICE

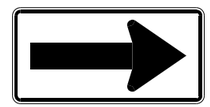

W1-6

SIZE (W x L)	48" x 24" (Conventional)	60" x 30" (Expressway & Freeway)
MOUNTING HEIGHT	7'-0"	

NOTE:

Delineator and object marker substrates and sign substrates shall be 0.080" Aluminum sign blank to conform to ASTM B-209 Alloy 6061-T6 or approved alternative.

Texas Department of Transportation

Traffic Safety Division Standard

DELINEATOR & OBJECT MARKER MATERIAL DESCRIPTION

D & OM(1)-20

FILE: dom1-20.dgn	DN: TXDOT	CK: TXDOT	DW: TXDOT	CK: TXDOT
©TxDOT August 2004	CONT	SECT	JOB	HIGHWAY
REVISIONS	0055	15	072	US 84
10-09 3-15	DIST	COUNTY		SHEET NO.
4-10 7-20	WAC	MCLENNAN		186

20A

DATE: 12/21/2020 6:08:27 PM
FILE: c:\pwworking\kho\pwprod\luke.fangman\dms98478\dom1-20 (1).dgn

DISCLAIMER:
The use of this standard is governed by the "Texas Engineering Practice Act". No warranty of any kind is made by TxDOT for any purpose whatsoever. TxDOT assumes no responsibility for the conversion of this standard to other formats or for incorrect results or damages resulting from its use.

POST TYPE AND SUPPORT FOUNDATION DETAILS

WING CHANNEL (WC)

GND

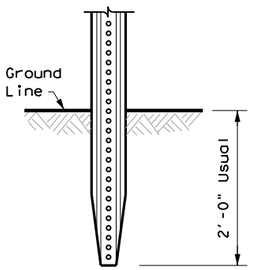

NOTES

1. Embedded Wing Channel (WC) post option may be used for Type 2 Object Markers and Delineators only.
2. 1.12 lbs/ft steel per ASTM A 1011 SS Gr. 50, or ASTM A499.

FLEXIBLE POSTS (YFLX, WFLX)

GND

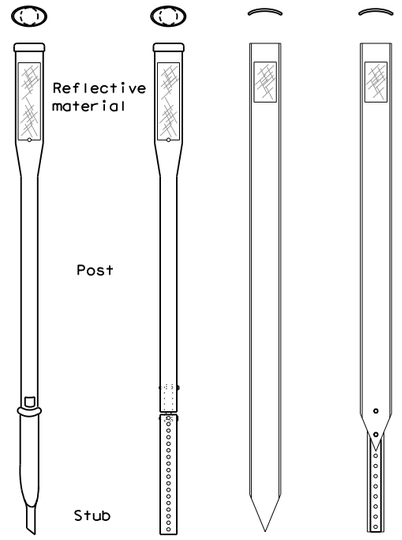

EMBEDDED

SRF

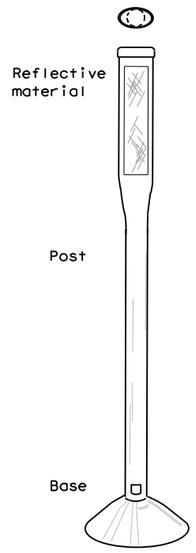

SURFACE MOUNT

NOTES

1. See "Flexible Delineator and Object Marker Posts" Material Producer List for approved devices.
2. Install per manufacturer's recommendations.
3. Post length may vary to meet field conditions.
4. When using yellow delineators with flexible posts to separate opposing direction of travel, such as centerline or median use, the flexible posts shall be yellow.

WEDGE ANCHOR SYSTEMS

WAS

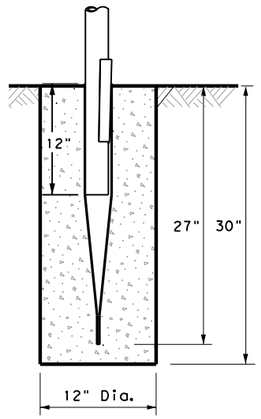

STEEL

WAP

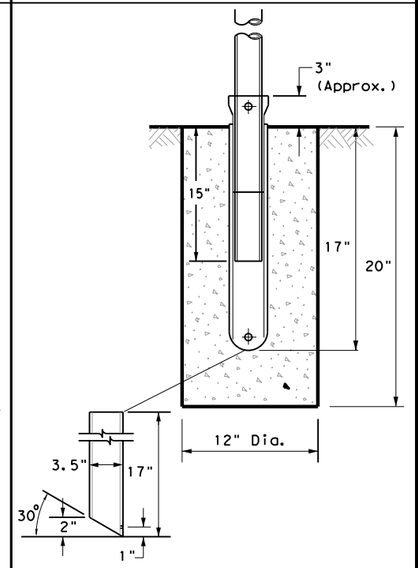

PLASTIC

NOTE

1. Install per manufacturer's recommendations.

TYPE OF BARRIER MOUNTS

GUARD FENCE ATTACHMENT

GF1

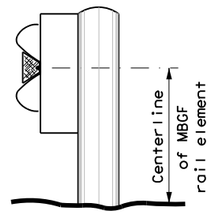

GF2

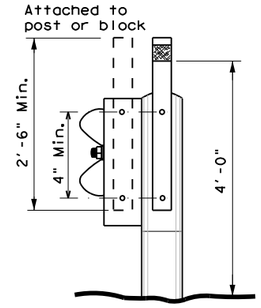

CONCRETE TRAFFIC BARRIER (CTB)

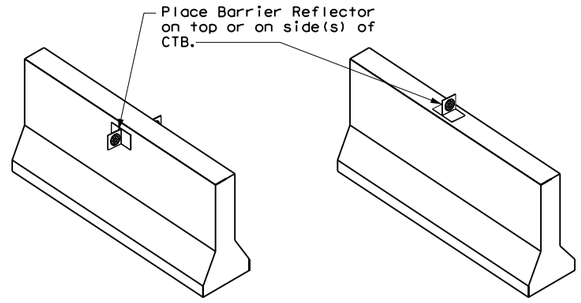

GENERAL NOTES

1. Place delineators on a section of roadway at a consistent distance from the edge of pavement.
2. Where a restriction prevents consistent placement from the pavement edge, place the affected object markers in line with the innermost edge of the obstruction.
3. When Type 2 object markers and delineators are more than 8'-0" from the edge of the pavement, it may not be possible to maintain a height of approximately 4'-0". If this is the case, place the object marker or delineator as close to the desired height as possible.
4. Install all delineators, object markers and barrier reflectors in accordance with the manufacturer's recommendation.
5. Barrier reflectors should be installed a minimum of 18 inches above the edge of the pavement surface.
6. Diagonal stripes on Type 3 object markers shall slope down toward the intended travel lane.

TYPES 1, 3, AND 4 OBJECT MARKERS AND CHEVRONS

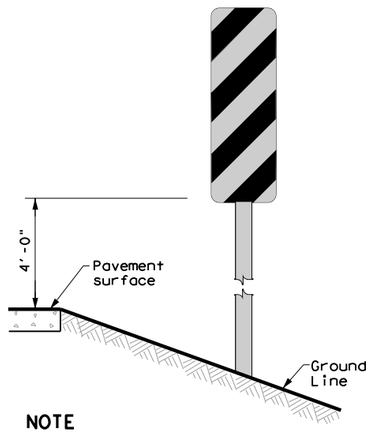

NOTE

Mounting at 4 feet to the bottom of the chevron is permitted for chevrons that will not exceed a height of 6'-6" to the top of the chevron (sizes 24" x 30" and smaller)

CHEVRONS AND ONE DIRECTION LARGE ARROW SIGN

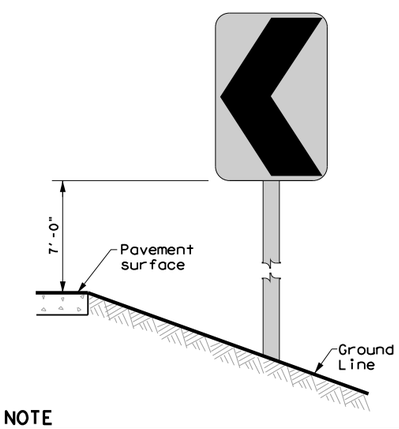

NOTE

Chevrons 30" x 36" and larger shall be mounted at a height of 7' to the bottom of the chevron. Chevron sign and ONE DIRECTION LARGE ARROW sign (W1-9T) shall be installed per SMD standard sheets and paid under item 644.

DELINEATORS AND TYPE 2 OBJECT MARKERS

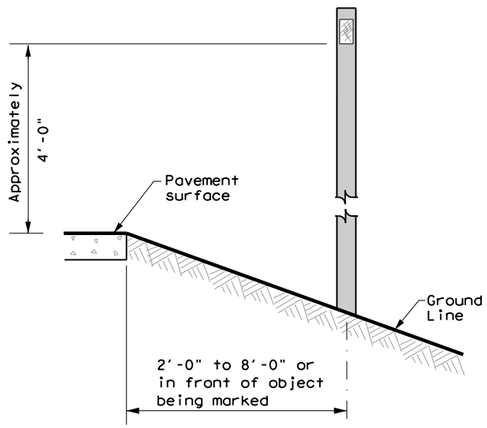

See general notes 1, 2 and 3.

Texas Department of Transportation

Traffic Safety Division Standard

DELINEATOR & OBJECT MARKER INSTALLATION

D & OM(2)-20

FILE: dom2-20.dgn	DN: TXDOT	CK: TXDOT	DW: TXDOT	CK: TXDOT
© TxDOT August 2004	CONT	SECT	JOB	HIGHWAY
REVISIONS	0055	15	072	US 84
10-09 3-15	DIST	COUNTY		SHEET NO.
4-10 7-20	WAC	MCLENNAN		187

20B

DATE: 12/21/2020 6:08:30 PM
FILE: c:\pwworking\kha\pwprod\luke.fangman\dms98478\dom2-20 (1).dgn

DISCLAIMER:
The use of this standard is governed by the "Texas Engineering Practice Act". No warranty of any kind is made by TxDOT for any purpose whatsoever. TxDOT assumes no responsibility for the conversion of this standard to other formats or for incorrect results or damages resulting from its use.

MINIMUM WARNING DEVICES AT CURVES WITH ADVISORY SPEEDS

Amount by which Advisory Speed is less than Posted Speed	Curve Advisory Speed	
	Turn (30 MPH or less)	Curve (35 MPH or more)
5 MPH & 10 MPH	• RPMs	• RPMs
15 MPH & 20 MPH	• RPMs and One Direction Large Arrow sign	• RPMs and Chevrons; or • RPMs and One Direction Large Arrow sign where geometric conditions or roadside obstacles prevent the installation of chevrons.
25 MPH & more	• RPMs and Chevrons; or • RPMs and One Direction Large Arrow sign where geometric conditions or roadside obstacles prevent the installation of chevrons	• RPMs and Chevrons

SUGGESTED SPACING FOR DELINEATORS ON HORIZONTAL CURVES

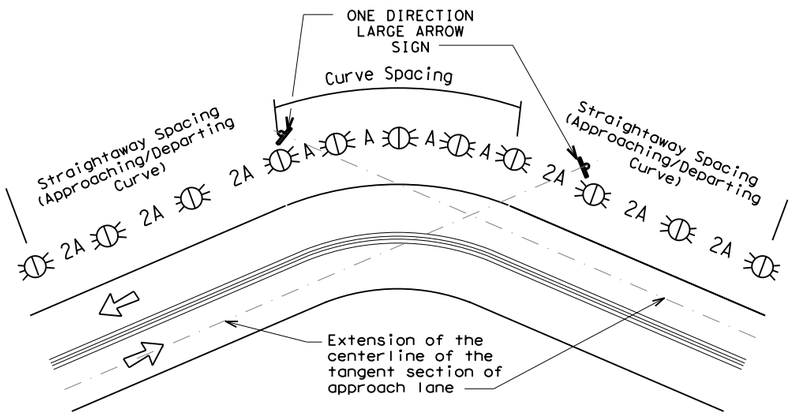

NOTE

ONE DIRECTION LARGE ARROW (W1-6) sign should be located at approximately and perpendicular to the extension of the centerline of the tangent section of approach lane.

SUGGESTED SPACING FOR CHEVRONS ON HORIZONTAL CURVES

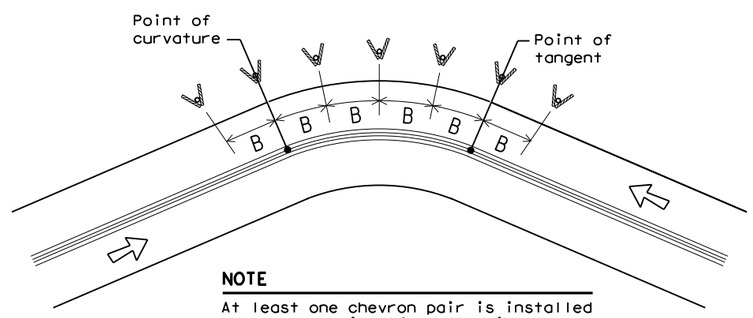

NOTE

At least one chevron pair is installed beyond the point of tangent in tangent section.

DELINEATOR AND CHEVRON SPACING

WHEN DEGREE OF CURVE OR RADIUS IS KNOWN

Degree of Curve	FEET			
	Radius of Curve	Spacing in Curve	Spacing in Straightaway	Chevron Spacing in Curve
		A	2A	B
1	5730	225	450	——
2	2865	160	320	——
3	1910	130	260	200
4	1433	110	220	160
5	1146	100	200	160
6	955	90	180	160
7	819	85	170	160
8	716	75	150	160
9	637	75	150	120
10	573	70	140	120
11	521	65	130	120
12	478	60	120	120
13	441	60	120	120
14	409	55	110	80
15	382	55	110	80
16	358	55	110	80
19	302	50	100	80
23	249	40	80	80
29	198	35	70	40
38	151	30	60	40
57	101	20	40	40

Curve delineator approach and departure spacing should include 3 delineators spaced at 2A. This spacing should be used during design preparation or when the degree of curve is known.

DELINEATOR AND CHEVRON SPACING

WHEN DEGREE OF CURVE OR RADIUS IS NOT KNOWN

Advisory Speed (MPH)	Spacing in Curve	Spacing in Straightaway	Chevron Spacing in Curve
	A	2xA	B
65	130	260	200
60	110	220	160
55	100	200	160
50	85	170	160
45	75	150	120
40	70	140	120
35	60	120	120
30	55	110	80
25	50	100	80
20	40	80	80
15	35	70	40

If the degree of curve is not known, delineator spacing may be determined based on the Advisory Speed of the curve. Use the delineator curve spacing for each Advisory Speed (MPH).

DELINEATOR AND OBJECT MARKER APPLICATION AND SPACING

CONDITION	REQUIRED TREATMENT	MINIMUM SPACING
Frwy./Exp. Tangent	RPMs	See PM-series and FPM-series standard sheets
Frwy./Exp. Curve	Single delineators on right side	See delineator spacing table
Frwy/Exp.Ramp	Single delineators on at least one side of ramp (should be on outside of curves) (see Detail 3 on D&OM(4))	100 feet on ramp tangents Use delineator spacing table for ramp curves ("straightway spacing" does not apply to ramp curves)
Acceleration/Deceleration Lane	Double delineators (see Detail 3 on D&OM(4))	100 feet (See Detail 3 on D & OM (4))
Truck Escape Ramp	Single red delineators on both sides	50 feet
Bridge Rail (steel or concrete)and Metal Beam Guard Fence	Bi-Directional Delineators when undivided with one lane each direction Single Delineators when multiple lanes each direction	Equal spacing (100'max) but not less than 3 delineators
Concrete Traffic Barrier (CTB) or Steel Traffic Barrier	Barrier reflectors matching the color of the edge line	Equal spacing 100' max
Cable Barrier	Reflectors matching the color of the edge line	Every 5th cable barrier post (up to 100'max)
Guard Rail Terminus/Impact Head	Divided highway - Object marker on approach end Undivided 2-lane highways - Object marker on approach and departure end	Requires reflective sheeting provided by manufacturer per D & OM (VIA) or a Type 3 Object Marker (OM-3) in front of the terminal end See D & OM (5) and D & OM (6)
Bridges with no Approach Rail	Type 3 Object Marker (OM-3) at end of rail and 3 single delineators approaching rail	See D & OM(5)
Reduced Width Approaches to Bridge Rail	Type 2 and Type 3 Object Markers (OM-3) and 3 single delineators approaching bridge	Requires reflective sheeting provided by manufacturer per D & OM (VIA) or a Type 3 Object Marker (OM-3) in front of the terminal end See D & OM (5)
Culverts without MBGF	Type 2 Object Markers	See Detail 2 on D & OM(4)
Crossovers	Double yellow delineators and RPMs	See Detail 1 on D & OM (4)
Pavement Narrowing (lane merge) on Freeways/Expressway	Single delineators adjacent to affected lane for full length of transition	100 feet

NOTES

1. Unless indicated otherwise, the delineator or barrier reflector color shall conform to the color of the pavement edge line on the side of the road where the delineators or barrier reflectors are placed.
2. Barrier reflectors may be used to replace required delineators.
3. Single red delineators may be mounted on the back side of delineator posts for wrong way driver applications

LEGEND

	Bi-directional Delineator
	Delineator
	Sign

Texas Department of Transportation — Traffic Safety Division Standard

DELINEATOR & OBJECT MARKER PLACEMENT DETAILS

D & OM(3)-20

FILE: dom3-20.dgn	DN: TXDOT	CK: TXDOT	DW: TXDOT	CK: TXDOT
© TxDOT August 2004	CONT	SECT	JOB	HIGHWAY
REVISIONS	0055	15	072	US 84
3-15 8-15	DIST	COUNTY		SHEET NO.
8-15 7-20	WAC	MCLENNAN		188

20C

DATE: 12/21/2020 6:08:33 PM
FILE: c:\pwworking\kha\pwprod\luke.fangman\dms98478\dom3-20.dgn

DISCLAIMER:
The use of this standard is governed by the "Texas Engineering Practice Act". No warranty of any kind is made by TxDOT for any purpose whatsoever. TxDOT assumes no responsibility for the conversion of this standard to other formats or for incorrect results or damages resulting from its use.

CROSSOVERS

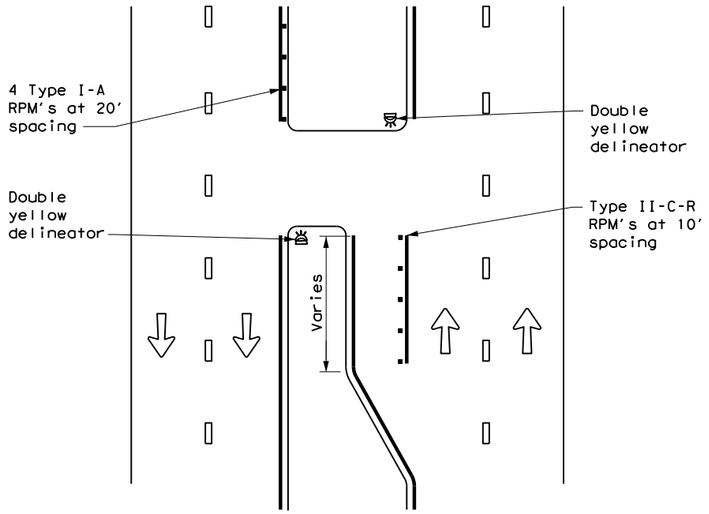

DETAIL 1

FOR CULVERTS WITHOUT MBGF

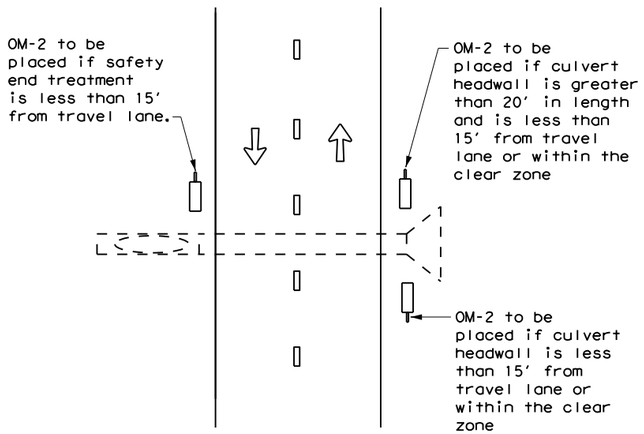

DETAIL 2

FREEWAY DELINEATION FOR RAMPS AND ACCELERATION/DECELERATION LANES

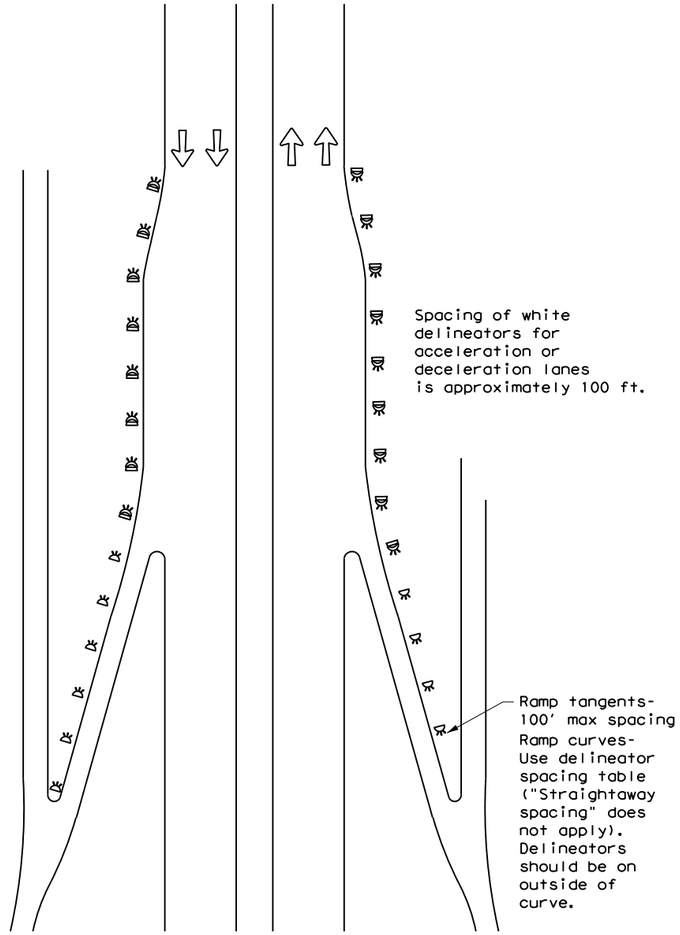

DETAIL 3

TYPICAL APPLICATION OF DEAD END BARRICADE

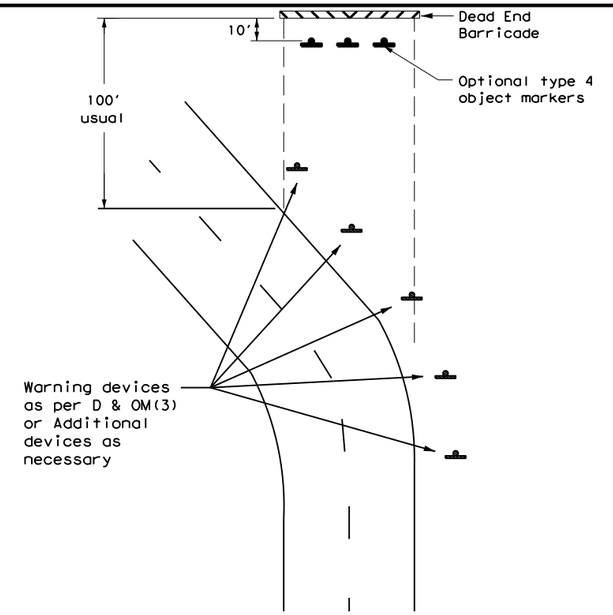

DETAIL 4

TYPICAL DEAD END BARRICADE INSTALLATION

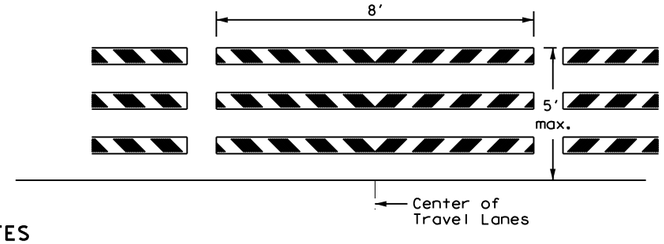

NOTES

1. Barricade striping shall be red and white reflective sheeting for all permanent road closures.
2. Barricade striping is red and white sloping toward the center of the roadway.
3. Type 3 Barricade Supports should be anchored to soil or pavement as described in compliant Work Zone Traffic Control Devices List, section D.2.f and D.2.g.

DETAIL 5

LEGEND	
	Bidirectional Delineator
	Delineator
	OM-3
	Barricade
	Sign
	OM-2
	Double Delineator

Texas Department of Transportation

Traffic Safety Division Standard

DELINEATOR & OBJECT MARKER PLACEMENT DETAILS

D & OM(4)-20

FILE: dom4-20.dgn	DN: TXDOT	CK: TXDOT	DW: TXDOT	CK: TXDOT
©TxDOT August 2004	CONT	SECT	JOB	HIGHWAY
REVISIONS	0055	15	072	US 84
3-15	DIST	COUNTY		SHEET NO.
7-20	WAC	MCLENNAN		189

20D

DATE: 12/21/2020 6:08:36 PM
FILE: c:\pwworking\khd\pwprod\luke.fangman\dms98478\dom4-20.dgn

DISCLAIMER:
The use of this standard is governed by the "Texas Engineering Practice Act". No warranty of any kind is made by TxDOT for any purpose whatsoever. TxDOT assumes no responsibility for the conversion of this standard to other formats or for incorrect results or damages resulting from its use.

CONTINUOUS CONCRETE OR STEEL BARRIER

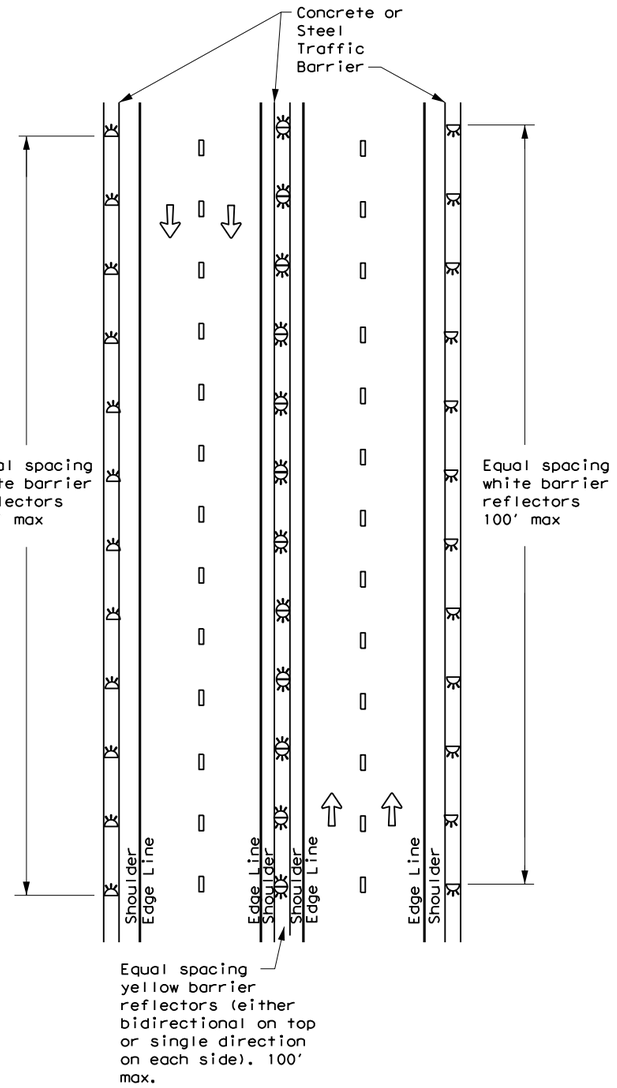

MULTI-LANE UNDIVIDED, TWO-WAY ROADWAY WITH METAL BEAM GUARD FENCE (MBGF)

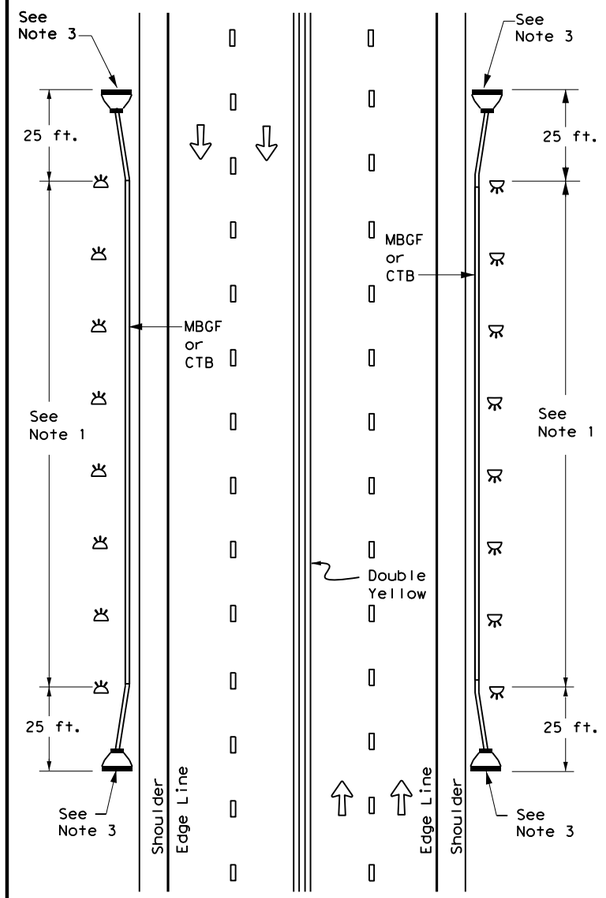

DIVIDED ROADWAY WITH METAL BEAM GUARD FENCE (MBGF)

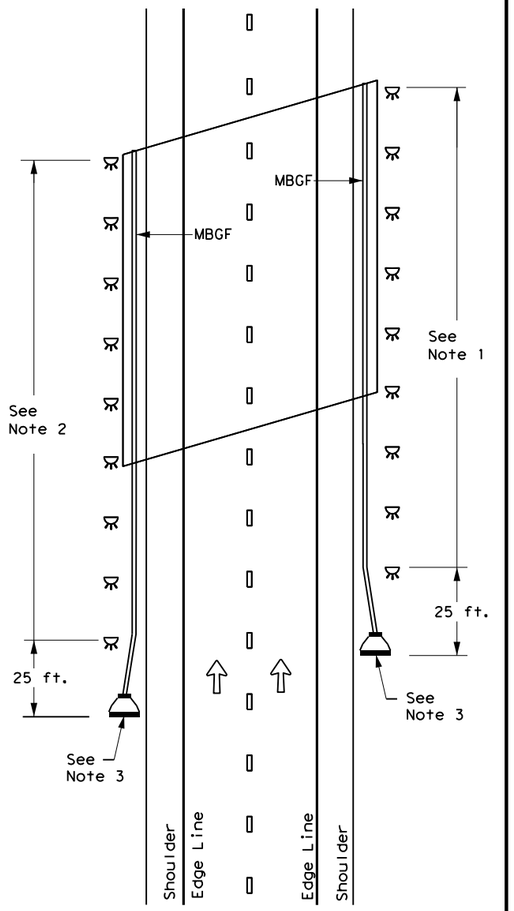

EMERGENCY CROSSOVER

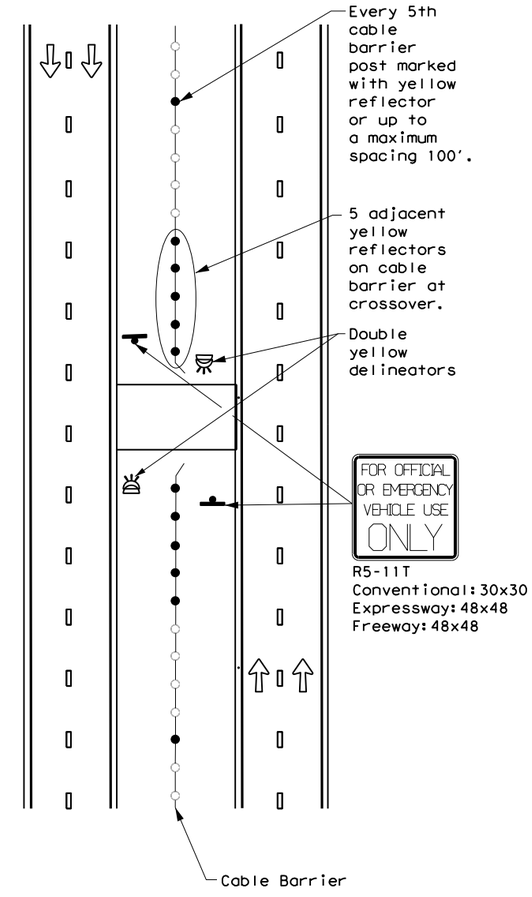

NOTES

1. Equal spacing (100' max), but not less than 3 single directional white barrier reflectors or delineators. On Continuos Barrier, equal spacing (100' max.)
2. Equal spacing (100' max), but not less than 3 single directional yellow barrier reflectors or delineators.
3. Terminal ends require reflective sheeting provided by manufacturer per D & OM (VIA) or a Type 3 Object Marker (OM-3)in front of the terminal end.

LEGEND

	Bidirectional Delineator
	Delineator
	OM-3
	OM-2
	Terminal End
	Traffic Flow

Texas Department of Transportation

Traffic Safety Division Standard

DELINEATOR & OBJECT MARKER PLACEMENT DETAILS

D & OM(6)-20

FILE: dom6-20.dgn	DN: TxDOT	CK: TxDOT	DW: TxDOT	CK: TxDOT
©TxDOT August 2015	CONT	SECT	JOB	HIGHWAY
REVISIONS	0055	15	072	US 84
7-20	DIST	COUNTY		SHEET NO.
	WAC	MCLENNAN		190

20F

DATE: 12/21/2020 6:08:39 PM
FILE: c:\pwworking\kho\pwprod\luke.fangman\dms98478\dom6-20 (1).dgn

DISCLAIMER:
The use of this standard is governed by the "Texas Engineering Practice Act". No warranty of any kind is made by TxDOT for any purpose whatsoever. TxDOT assumes no responsibility for the conversion of this standard to other formats or for incorrect results or damages resulting from its use.

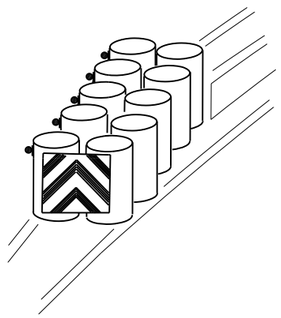

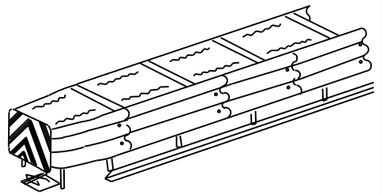

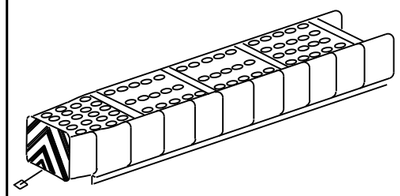

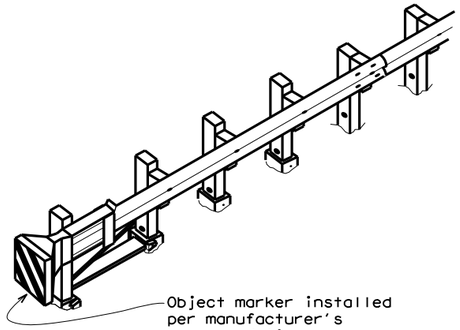

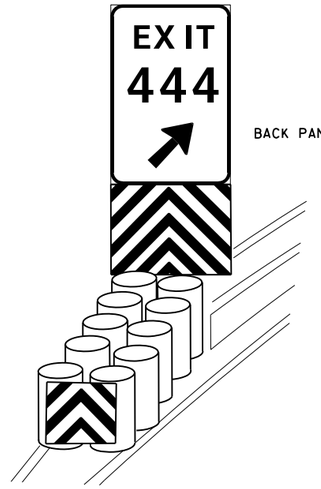

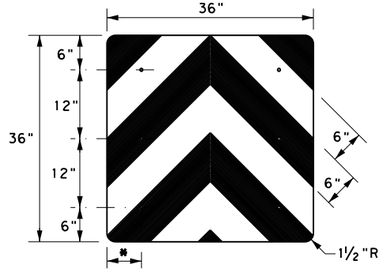

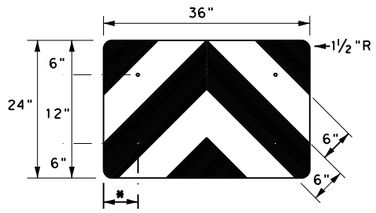

* Adjust to fit attenuator per manufacturer's recommendation, or as directed by the Engineer

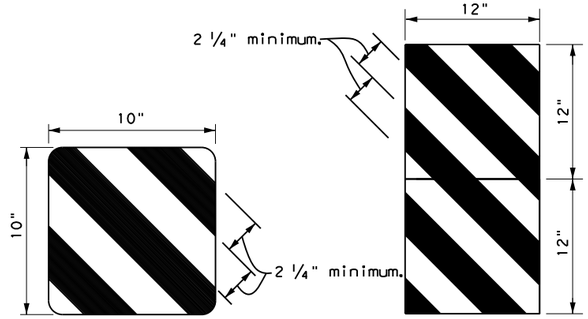

OBJECT MARKERS SMALLER THAN 3 FT^2

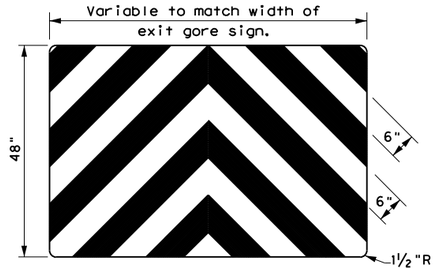

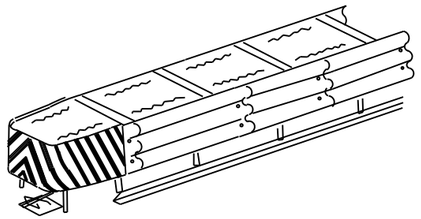

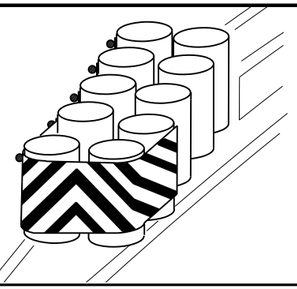

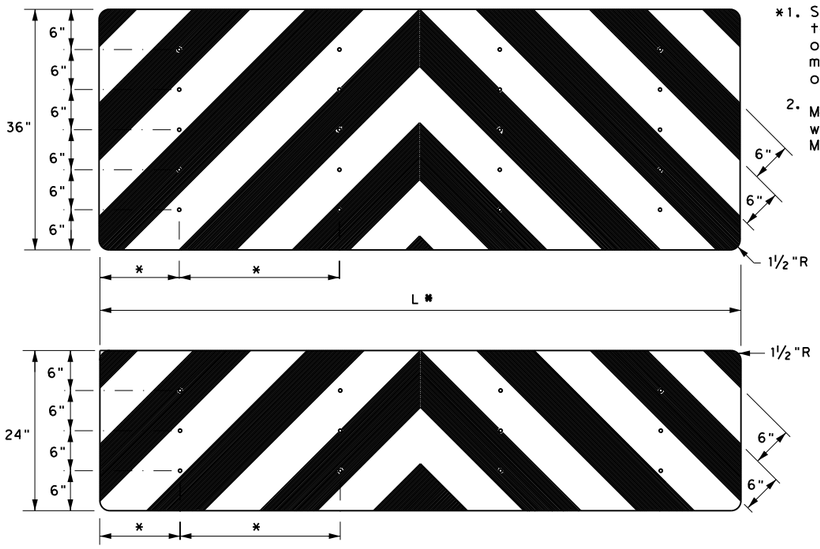

NOTES

*1. Spacing should be adjusted to attach through centerline of drum, per attenuator manufacturers recommendation, or as directed by the Engineer.

2. Mounting should be flush with top of attenuator. Minimum size 96" x 24".

NOTES

1. Object Markers shall conform to the Texas MUTCD and meet the color and reflectivity requirement of Department Material Specification DMS 8300. Background shall be yellow reflective sheeting (Type B or C) and Chevron shall be black.

2. Object Markers may be fabricated from adhesive backed reflective sheeting applied directly to guardrail end treatment, or applied directly to an "end cap" as per the manufacturer's recommendation. Direct applied sheeting shall provide a smooth surface and have no wrinkles, air bubbles, cuts or tears. A radius at the corners is not required for direct applied sheeting.

3. Object Marker size may be reduced to fit smaller devices. Width of alternating black and yellow stripes are typically 6". Object Markers smaller than 3ft may have reduced width stripes of a minimum of 2 ¼".

4. Pop rivets, screws, or nuts and bolts may be used to attach object markers and reflectors. Holes, slots or other openings may be cut or drilled through object markers to allow cable or other attachments.

5. Object Marker at nose of attenuator is subsidiary to the attenuator.

6. See D & OM (1-4) for required barrier reflectors.

Texas Department of Transportation

Traffic Safety Division Standard

DELINEATOR & OBJECT MARKER FOR VEHICLE IMPACT ATTENUATORS

D & OM(VIA)-20

FILE: domvia20.dgn	DN: TXDOT	CK: TXDOT	DW: TXDOT	CK: TXDOT
© TxDOT December 1989	CONT	SECT	JOB	HIGHWAY
REVISIONS	0055	15	072	US 84
4-92 8-04	DIST	COUNTY		SHEET NO.
8-95 3-15	WAC	MCLENNAN		191
4-98 7-20				

20G

DATE: 12/21/2020 6:08:42 PM
FILE: c:\pwworking\kha\pwprod\luke.fangman\dms98478\domvia-20.dgn

DISCLAIMER:
The use of this standard is governed by the "Texas Engineering Practice Act". No warranty of any kind is made by TxDOT for any purpose whatsoever. TxDOT assumes no responsibility for the conversion of this standard to other formats or for incorrect results or damages resulting from its use.

DATE: 12/21/2020 6:08:45 PM
FILE: c:\pwworking\kha\pwroot\luke.fangman\dms98478\rwstde02.dgn

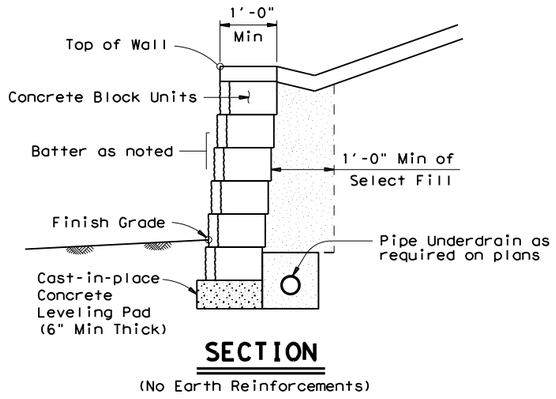

SECTION

(No Earth Reinforcements)

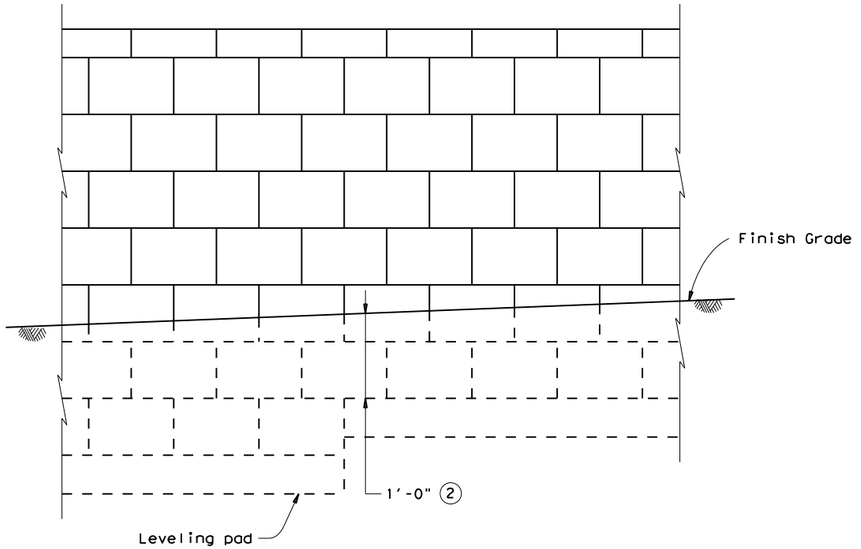

TYPICAL ELEVATION

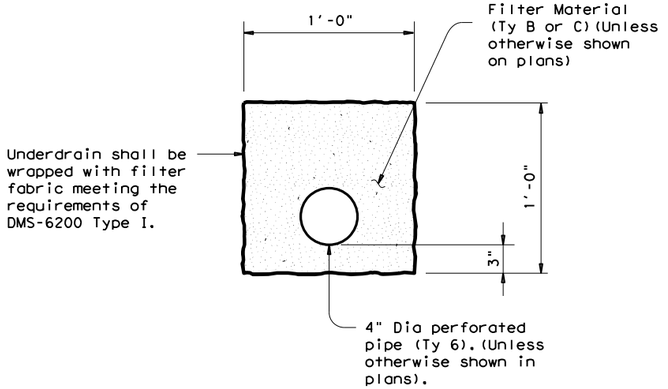

UNDERDRAIN DETAIL

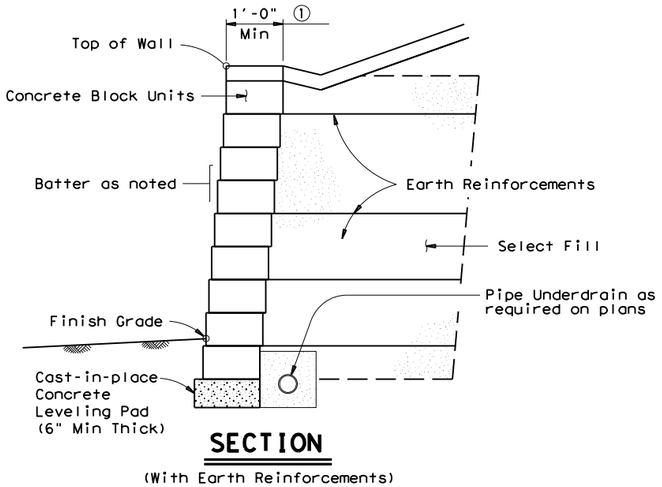

SECTION

(With Earth Reinforcements)

① For systems utilizing continuous structural pins passing thru a minimum of 3 block layers, the minimum block depth shall be 8". The maximum vertical spacing of primary reinforcement on these systems shall be 24", and intermediate reinforcement will not be required.

② Unless noted elsewhere in the plans, 1'-0" minimum cover shall be provided from the top of leveling pad to finish grade.

③ For walls which are designated as landscape walls and are less than 6' tall, the following modifications to the design criteria will be allowed:

Factor of safety in sliding > 1.2.
Factor of safety in overturning > 1.5.
Connection strength factor of safety of 1.0 at ¾" strain.
Minimum earth reinforcement length of 4'.

The above modified criteria does not apply to walls over 6' tall regardless of designation.

EARTH REINFORCEMENTS:

Walls may be constructed without earth reinforcements if all stability criteria are met with the blocks alone. If all stability criteria are not satisfied, earth reinforcements shall be provided.

The long term design strength (LTDS) of earth reinforcement shall be calculated in accordance with current AASHTO Standard and Interim Specifications.

Soil-geogrid pullout coefficient values shall be determined in accordance with Geosynthetics Research Institute (GRI) Method GG-5, "Guidelines for Evaluating Geogrid Pullout".

For the combination of concrete block and geogrid chosen, connection strength data shall be provided. The allowable connection load shall be limited to the connection strength developed at ¾" displacement, divided by a 1.5 safety factor. ③

For internal stability calculations, the failure plane will be assumed to originate at the back of the concrete blocks.

The factor of safety against pullout of the earth reinforcements shall be determined from test data evaluated at ¾" strain.

The maximum vertical spacing of primary earth reinforcement layers shall be 40 inches. ①
The minimum length of primary earth reinforcements shall be 8 feet, measured from the front of the blocks. ③

A layer of intermediate reinforcement shall be provided between primary reinforcements when the spacing between primary layers exceeds twice the horizontal depth of the concrete block unit. Intermediate reinforcement shall have a minimum length of 4 feet, and shall provide local stability for the concrete block units. ①

STABILITY CRITERIA:

Factor of safety in sliding along the base of the structure shall be greater than or equal to 1.5. ③

Factor of safety in overturning shall be greater than or equal to 2.0. ③

The base pressure resultant shall fall within the middle third of the retaining wall.

DESIGN PARAMETERS:

Structure shall be based on the following design parameters:

Random Backfill: Unit weight = 120 pcf.
(Embankment or Existing Soils) ø = 30° c = 0 psf
Select Backfill: Unit weight = 120 pcf
ø = 34° c = 0 psf

GENERAL NOTES:

Sections and Typical Elevation shown are for informational purposes only. Specific geometry is to be determined based on wall layouts and other plan information.

Unless otherwise shown in the plans, wall batter shall be a maximum of 3" per foot. Blocks shall be placed horizontally, and a positive means of obtaining batter such as pins, keyways, or concrete lips shall be provided.

Texas Department of Transportation

Bridge Division Standard

CONCRETE BLOCK RETAINING WALL

RW(CB)

FILE: rwstde02.dgn	DN: TxDOT	CK: TxDOT	DW: GHO	CK: MPM
©TxDOT March 2010	CONT	SECT	JOB	HIGHWAY
REVISIONS	0055	15	072	US 84
	DIST	COUNTY		SHEET NO.
	WAC	MCLENNAN		192

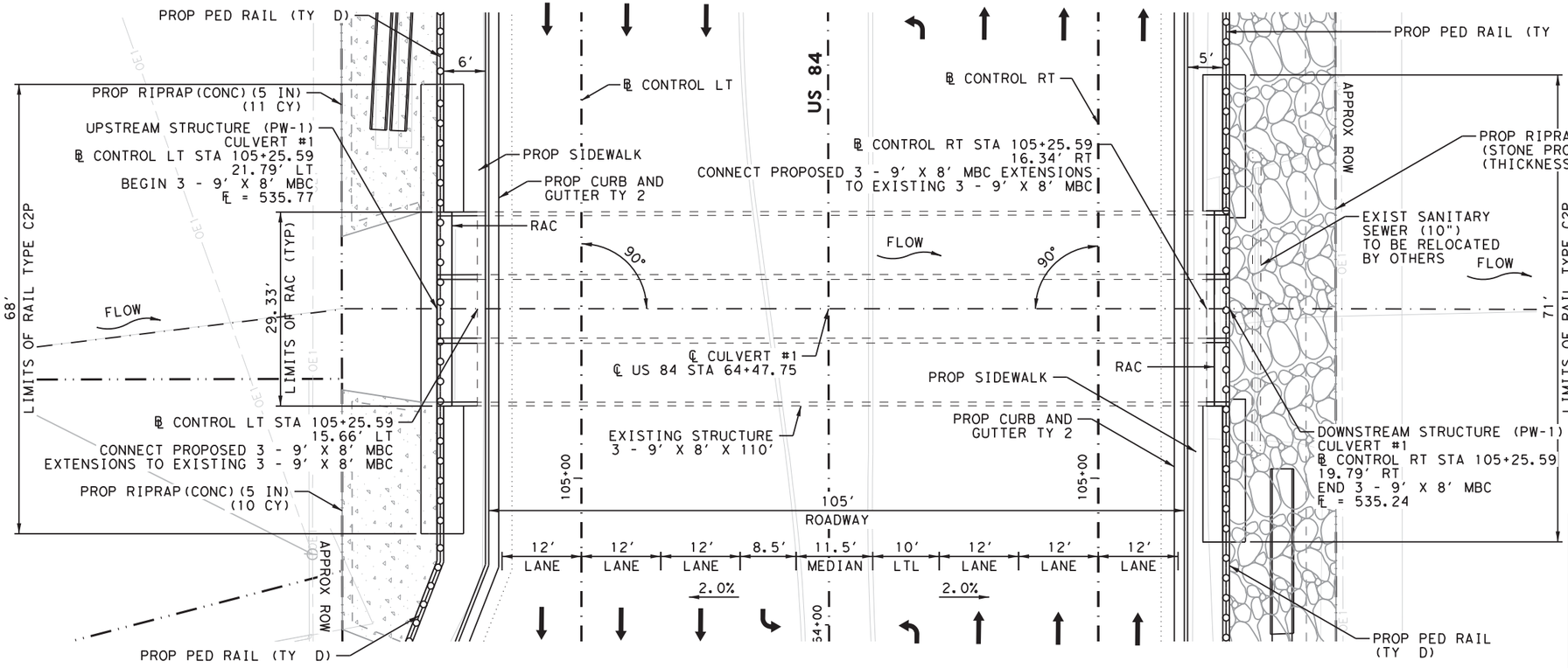

GENERAL NOTES

1. CONTRACTOR TO VERIFY ALL ELEVATIONS AND DIMENSIONS TO EXISTING STRUCTURES IN THE FIELD PRIOR TO COMMENCING WORK.
2. ALL DIMENSIONS AND OFFSETS ARE SHOWN TO NOMINAL FACE OF CURB.
3. HYDRAULIC DATA SHOWN WAS OBTAINED FROM WACO STORMWATER MASTER PLAN LOMR VOLUME 2.
4. REFER TO SIDEWALK LAYOUTS FOR ADDITIONAL INFORMATION.

BRIDGE DATA

NBI# 09-161-0-0055-15-052
DESIGN SPEED = 40 MPH
ADT (2018) = 35,488
ADT (2038) = 39,140
FUNCTIONAL CLASS = URBAN ARTERIAL

ITEM	DESCRIPTION	UNIT	QTY
104-6009	REMOVING CONC (RIPRAP)	SY	250
403 6001	TEMPORARY SPL SHORING	SF	1542
432 6002	RIPRAP (CONC) (5 IN)	CY	21
432 6033	RIPRAP (STONE PROTECTION) (18 IN)	CY	333
450 6101	RAIL (TY C2P)	LF	139
462 6071	CONC BOX CULV (9 FT X 8 FT) (EXTEND)	LF	29
466 6171	WINGWALL (PW - 1) (HW=10 FT)	EA	1
466 6255	WINGWALL (PW - 1) (HW=11 FT) (MOD)	EA	1

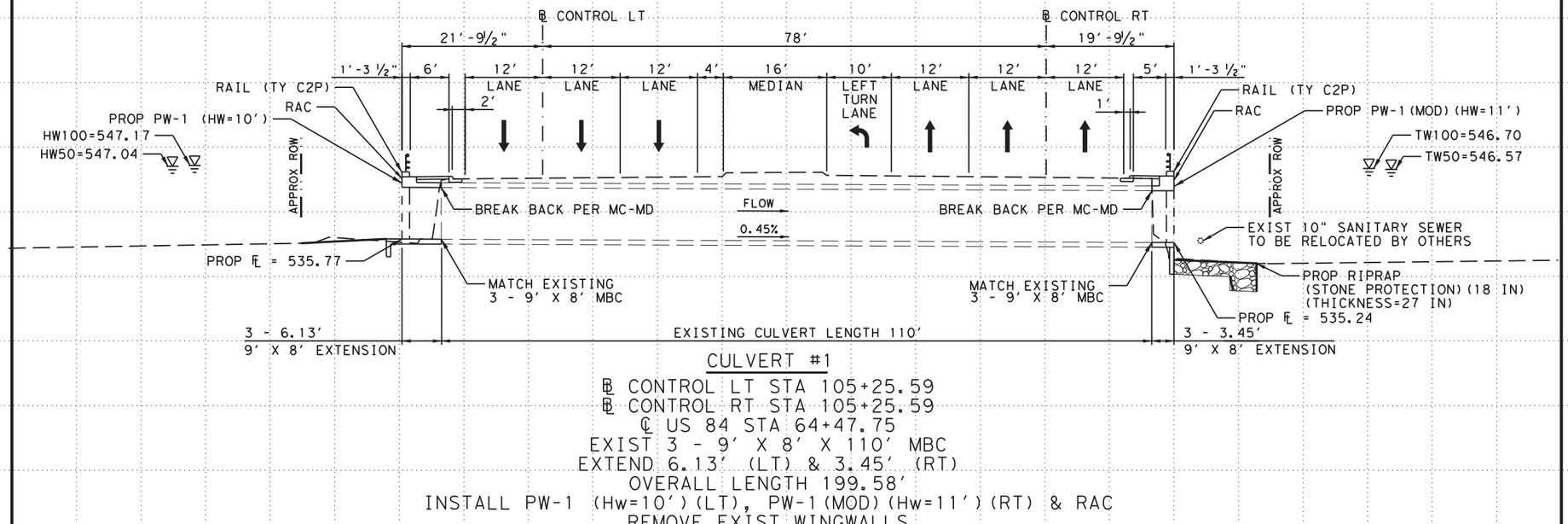

CULVERT #1

℄ CONTROL LT STA 105+25.59
℄ CONTROL RT STA 105+25.59
℄ US 84 STA 64+47.75
EXIST 3 - 9' X 8' X 110' MBC
EXTEND 6.13' (LT) & 3.45' (RT)
OVERALL LENGTH 199.58'
INSTALL PW-1 (Hw=10') (LT), PW-1 (MOD) (Hw=11') (RT) & RAC
REMOVE EXIST WINGWALLS

HYDRAULIC DATA:

Q50	= 3790 cfs	Q100	= 4340 cfs
TW50	= 546.57	TW100	= 546.70
HW50	= 547.04	HW100	= 547.17
V50	= 7.42 fps	V100	= 7.80 fps

STATE OF TEXAS — JEFFREY L. RUTH — 99007 — LICENSED PROFESSIONAL ENGINEER

12/21/2020

Kimley»Horn F-928

© 2021

Texas Department of Transportation

BRIDGE CLASS CULVERT
CULVERT #1
WACO CREEK

SHEET 1 OF 1

FED. RD. DIV. NO.	PROJECT ID.	HIGHWAY NO.
6	(SEE TITLE SHEET)	US 84

STATE	DIST.	COUNTY	SHEET NO.
TEXAS	WAC	MCLENNAN	193
CONT.	SECT.	JOB	
0055	15	072	

FILENAME: pw:\\kh-pw.bentley.com:kh-pw-01\Documents\01 Active Projects\TX-FTW-063586010 - US 84 (Waco Drive)\WAC 005515072\4 - Design\Plan Set\5. Drainage\US84_BRG_CL01.dgn
PLOTTED: 12/21/2020

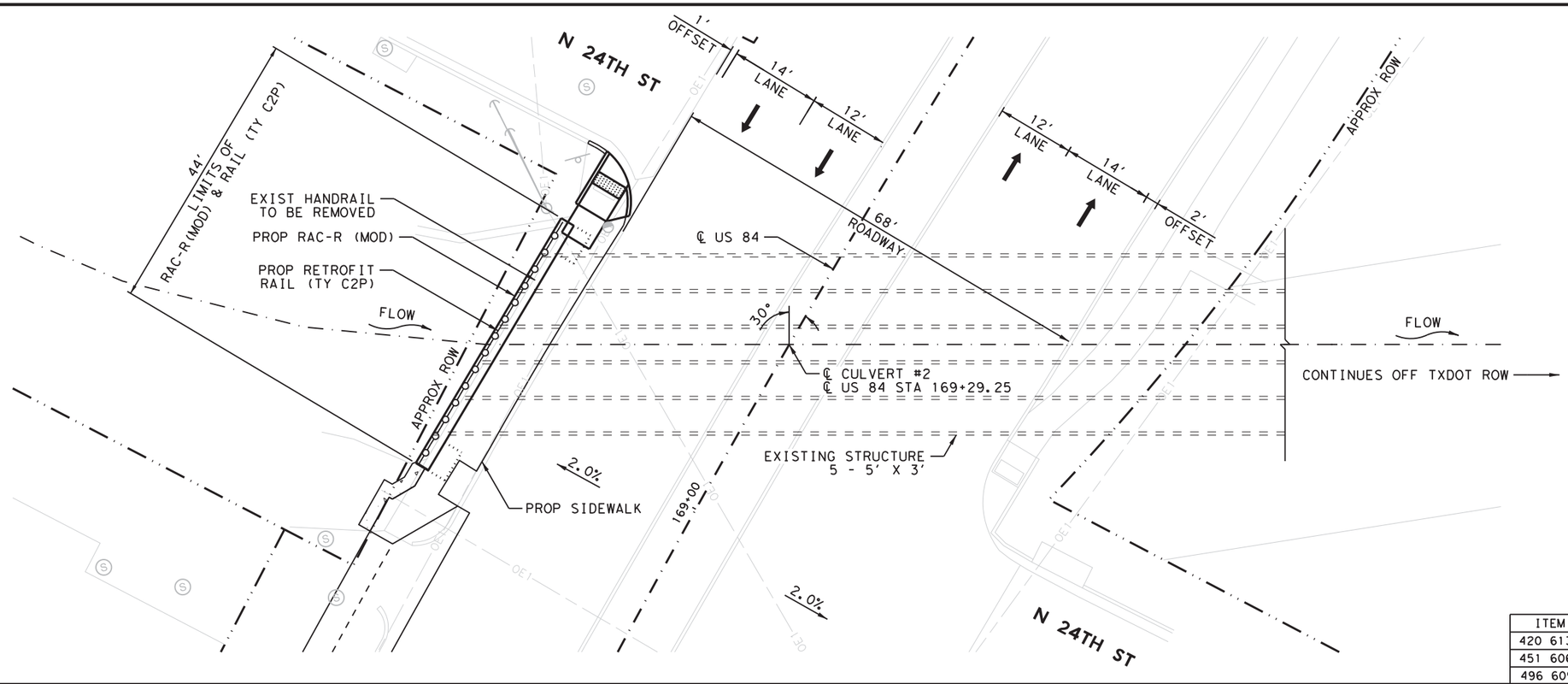

GENERAL NOTES

1. CONTRACTOR TO VERIFY ALL ELEVATIONS AND DIMENSIONS TO EXISTING STRUCTURES IN THE FIELD PRIOR TO COMMENCING WORK.
2. ALL DIMENSIONS AND OFFSETS ARE SHOWN TO NOMINAL FACE OF CURB.
3. REFER TO SIDEWALK LAYOUTS FOR ADDITIONAL INFORMATION.

BRIDGE DATA

NBI# 09-161-0-0055-15-049
DESIGN SPEED = 40 MPH
ADT (2018) = 35,488
ADT (2038) = 39,140
FUNCTIONAL CLASS = URBAN ARTERIAL

ITEM	DESCRIPTION	UNIT	QTY
420 6136	CL C CONC (RAC-R)	CY	11
451 6064	RETROFIT RAIL (TY C2P)	LF	44
496 6091	REMOV STR CURB	EA	1

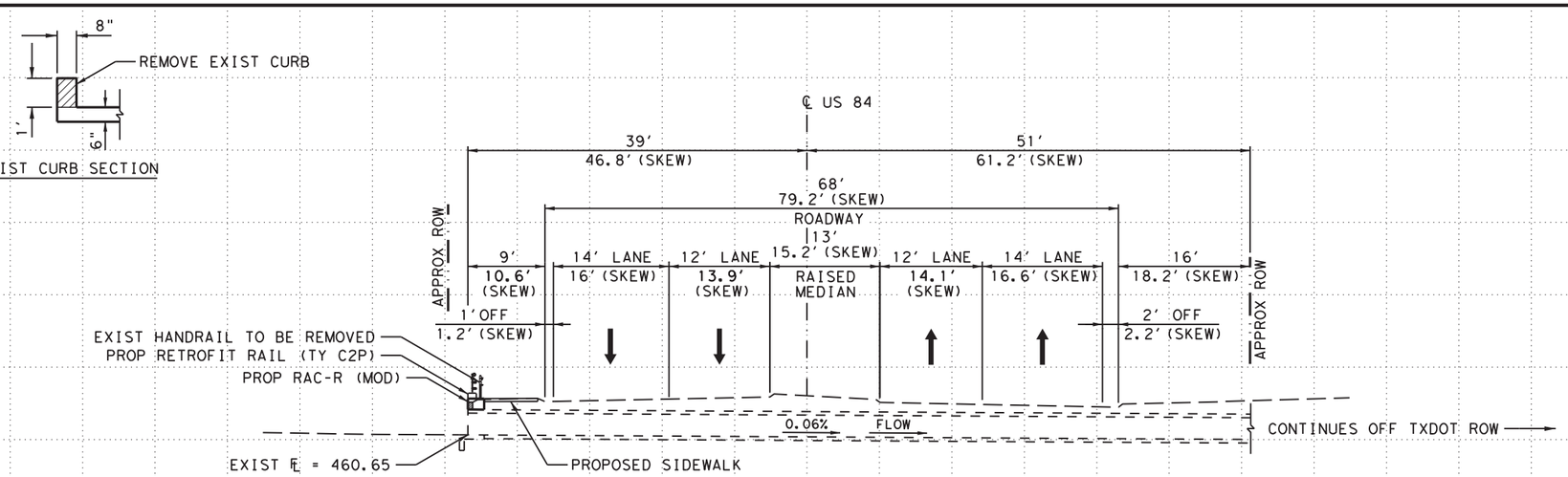

CULVERT #2

℄ US 84 STA 169+29.25
EXIST 5 - 5' X 3' MBC - 30° RIGHT FORWARD SKEW
REMOVE EXIST HANDRAIL AND CULVERT CURB (LT)
INSTALL RAC-R (MOD) AND TRAFFIC RAIL TY C2P (LT)

12/21/2020

Kimley»Horn F-928

© 2021
Texas Department of Transportation

BRIDGE CLASS CULVERT
CULVERT #2
TRIBUTARY OF WACO CREEK

SHEET 1 OF 1

FED. RD. DIV. NO.	PROJECT ID.	HIGHWAY NO.
6	(SEE TITLE SHEET)	US 84

STATE	DIST.	COUNTY	SHEET NO.
TEXAS	WAC	MCLENNAN	194
CONT.	SECT.	JOB	
0055	15	072	

FILENAME: pw:\\kh-pw.bentley.com:kh-pw-01\Documents\01 Active Projects\TX-FTW-063586010 - US 84 (Waco Drive)\WAC 0055150721 - Design\Plan Set\5. Drainage\US84_BRG_CL02.dgn
PLOTTED: 12/21/2020

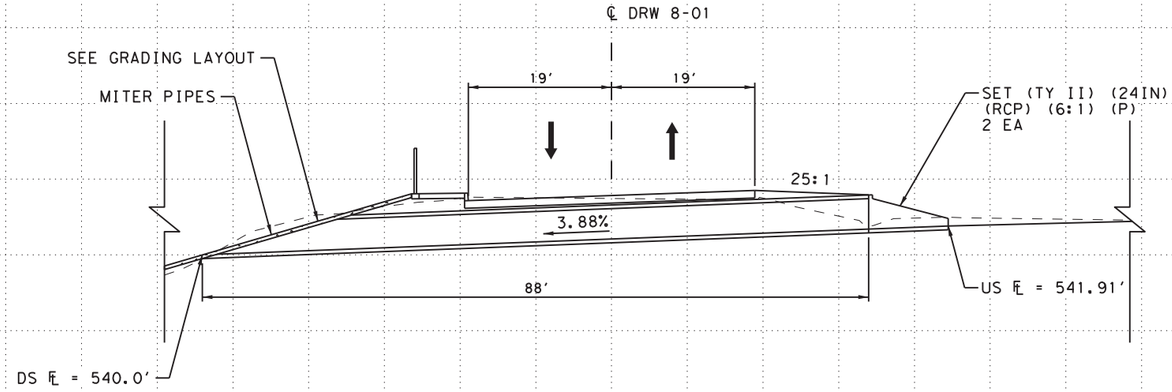

DRIVEWAY 8-01 CULVERT - STA 65+29.05 (PARALLEL TO US 84)
EXIST: 2-24" RCP (TO BE REMOVED)
PROP: 2-24" X 88' RCP WITH 2-PSET-RP

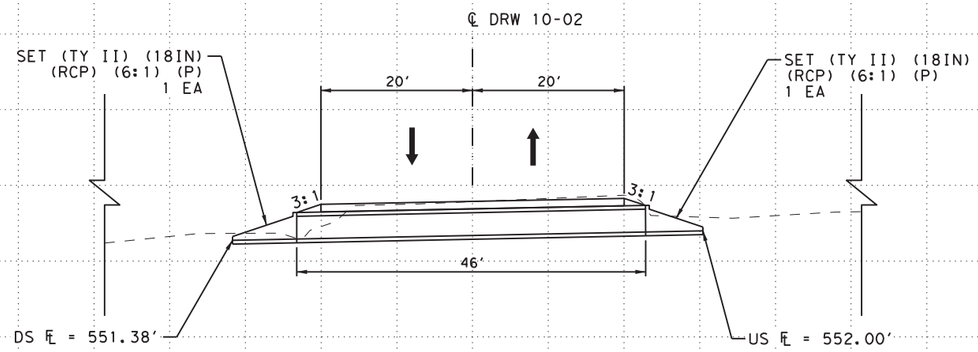

DRIVEWAY 10-02 CULVERT - STA 74+16.67 (PARALLEL TO US 84)
EXIST: 18" RCP (TO BE REMOVED)
PROP: 18" X 46' RCP WITH 2-PSET-RP

PROP ELEV
EXIST ELEV

0' 10' 20' HORZ
0' 5' 10' VERT
SCALE

NOTES:

1. CONTRACTOR TO CONFIRM EXISTING GRADES PRIOR TO MODIFYING EXISTING STRUCTURES.
2. CONTRACTOR SHALL CONFIRM LOCATIONS OF ALL UTILITIES PRIOR TO CONSTRUCTION AND/OR EXCAVATION.
3. SEE GRADING LAYOUT SHEETS FOR ADDITIONAL INFORMATION.
4. SEE SIDEWALK LAYOUT SHEETS FOR ADDITIONAL INFORMATION.

STATE OF TEXAS
JOSHUA J. RUTH
103901
LICENSED
PROFESSIONAL ENGINEER

03/01/2021

Kimley»Horn F-928

© 2021
Texas Department of Transportation

CULVERT LAYOUTS

SHEET 1 OF 2

FED. RD. DIV. NO.	PROJECT ID.	HIGHWAY NO.
6	(SEE TITLE SHEET)	US 84

STATE	DIST.	COUNTY	SHEET NO.
TEXAS	WAC	MCLENNAN	195
CONT.	SECT.	JOB	
0055	15	072	

FILENAME: pw:\\kh-pw.bentley.com:kh-pw-01\Documents\01 Active Projects\TX-FTW-063586010 - US 84 (Waco Drive)\WAC 0055150724 - Design\Plan Set\5. Drainage\US84_CULVERT_LAY01.dgn
PLOTTED: 12/21/2020

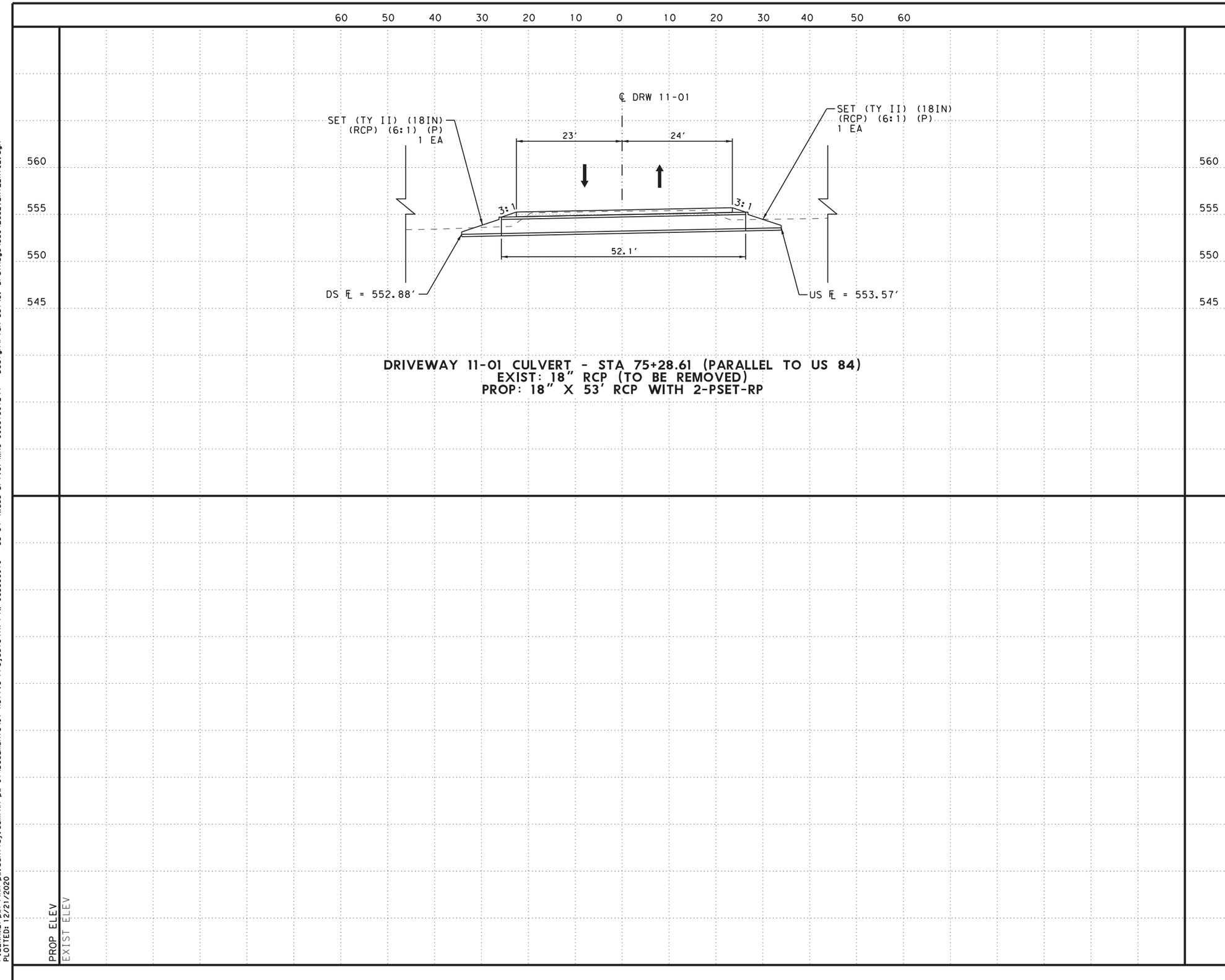

DRIVEWAY 11-01 CULVERT - STA 75+28.61 (PARALLEL TO US 84)
EXIST: 18" RCP (TO BE REMOVED)
PROP: 18" X 53' RCP WITH 2-PSET-RP

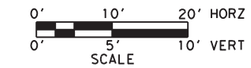

NOTES:

1. CONTRACTOR TO CONFIRM EXISTING GRADES PRIOR TO MODIFYING EXISTING STRUCTURES.
2. CONTRACTOR SHALL CONFIRM LOCATIONS OF ALL UTILITIES PRIOR TO CONSTRUCTION AND/OR EXCAVATION.
3. SEE GRADING LAYOUT SHEETS FOR ADDITIONAL INFORMATION.
4. SEE SIDEWALK LAYOUT SHEETS FOR ADDITIONAL INFORMATION.

STATE OF TEXAS
SETH T. RUTLEDGE
129231
LICENSED
PROFESSIONAL ENGINEER

03/01/2021

Kimley»Horn F-928

© 2021

Texas Department of Transportation

CULVERT LAYOUTS

SHEET 2 OF 2

FED.RD. DIV.NO.	PROJECT ID.	HIGHWAY NO.
6	(SEE TITLE SHEET)	US 84

STATE	DIST.	COUNTY	SHEET NO.
TEXAS	WAC	MCLENNAN	196
CONT.	SECT.	JOB	
0055	15	072	

FILENAME: pw:\\kh-pw.bentley.com:kh-pw-01\Documents\01 Active Projects\TX-FTW-063586010 - US 84 (Waco Drive)\WAC 005515072\4 - Design\Plan Set\5. Drainage\US84_CULVERT_LAY02.dgn
PLOTTED: 12/21/2020

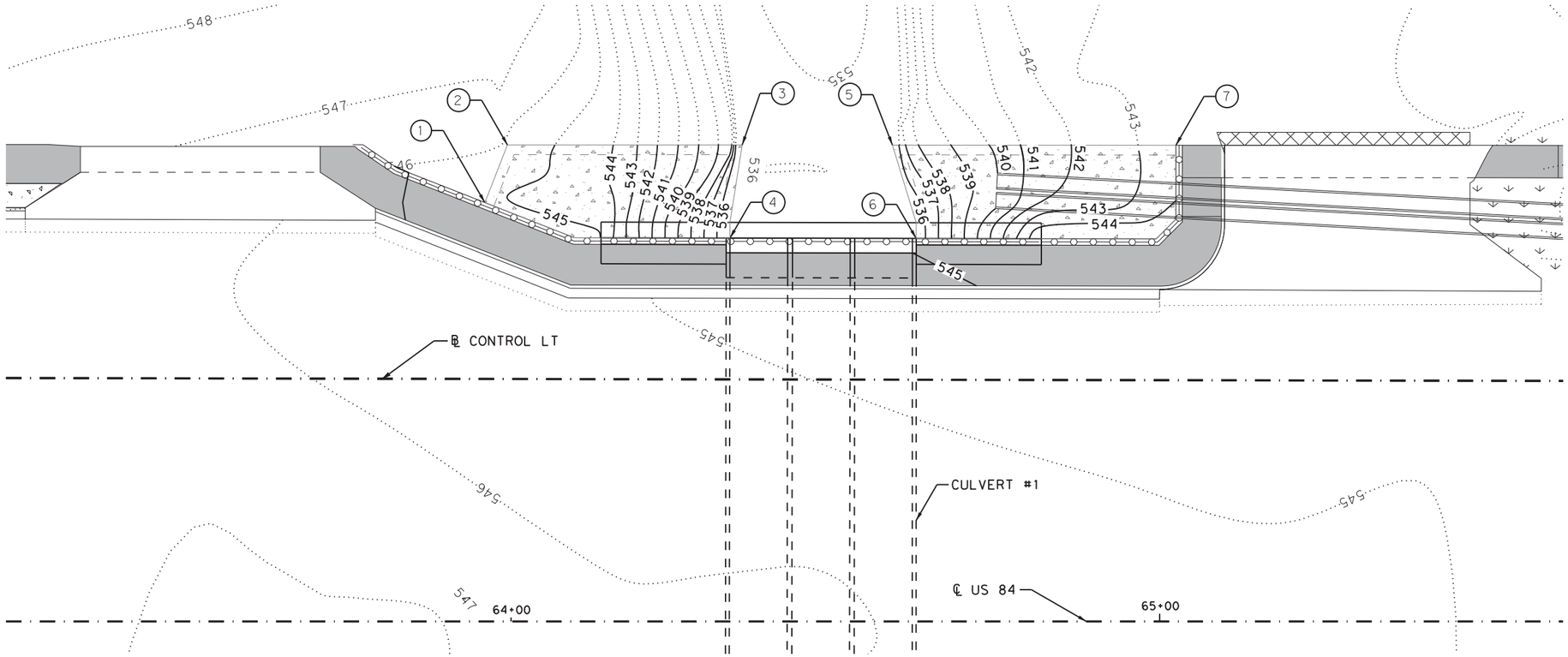

LEGEND

— XXX — PROPOSED CONTOUR

····· XXX ····· EXISTING CONTOUR

NOTES:

1. REFER TO BRIDGE CLASS CULVERT 1 LAYOUT FOR ADDITIONAL INFORMATION.
2. RIPRAP SHOWN MAY VARY TO FIT THE FIELD CONDITIONS AS DIRECTED BY THE ENGINEER.

POINT NO	STATION (℄ CONTROL LT)	OFFSET	ELEVATION
1	104+73.69	27.20' LT	545.48
2	104+77.17	36.10' LT	546.03
3	105+13.35	36.15' LT	535.63
4	105+11.49	21.79' LT	535.77
5	105+36.51	36.18' LT	535.21
6	105+40.20	21.79' LT	535.77
7	105+80.19	36.24' LT	543.39

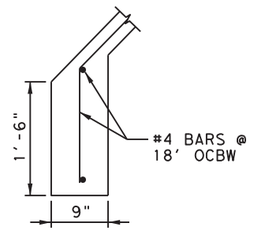

RIPRAP TOE DETAIL

12/21/2020

Kimley»Horn F-928

© 2021

Texas Department of Transportation

GRADING LAYOUT

SHEET 1 OF 2

FED. RD. DIV. NO.	PROJECT ID.		HIGHWAY NO.
6	(SEE TITLE SHEET)		US 84
STATE	DIST.	COUNTY	SHEET NO.
TEXAS	WAC	MCLENNAN	197
CONT.	SECT.	JOB	
0055	15	072	

FILENAME: pw:\\kh-pw.bentley.com:kh-pw-01\Documents\01 Active Projects\TX-FTW-063586010 - US 84 (Waco Drive)\WAC 005515072\4 - Design\Plan Set\5. Drainage\US84_CULVERT_GRD01.dgn
PLOTTED: 12/21/2020

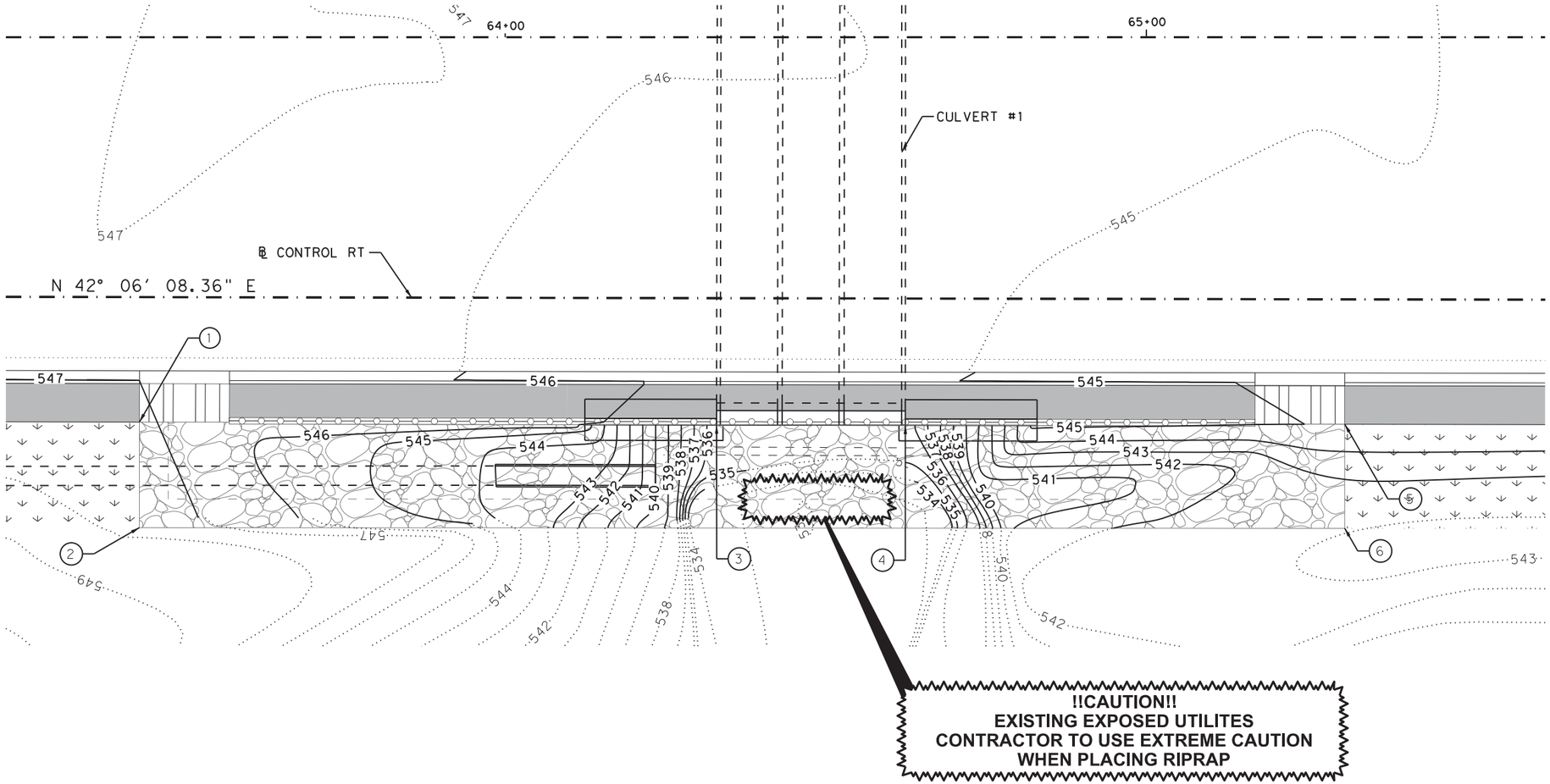

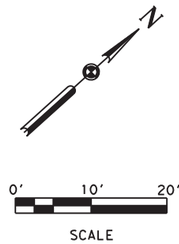

LEGEND

XXX — PROPOSED CONTOUR

XXX ····· EXISTING CONTOUR

NOTES:

1. REFER TO BRIDGE CLASS CULVERT 1 LAYOUT FOR ADDITIONAL INFORMATION.
2. RIPRAP SHOWN MAY VARY TO FIT THE FIELD CONDITIONS AS DIRECTED BY THE ENGINEER.

POINT NO	STATION (℄ CONTROL RT)	OFFSET	ELEVATION
1	104+20.94	19.50' RT	547.12
2	104+20.94	35.98' RT	547.57
3	105+10.93	19.79' RT	535.24
4	105+40.36	19.79' RT	535.24
5	106+08.87	19.50' RT	544.94
6	106+08.87	35.73' RT	542.86

12/21/2020

Kimley»Horn F-928

© 2021

Texas Department of Transportation

GRADING LAYOUT

SHEET 2 OF 2

FED. RD. DIV. NO.	PROJECT ID.		HIGHWAY NO.
6	(SEE TITLE SHEET)		US 84
STATE	DIST.	COUNTY	SHEET NO.
TEXAS	WAC	MCLENNAN	198
CONT.	SECT.	JOB	
0055	15	072	

FILENAME: pw:\\kh-pw.bentley.com:kh-pw-01\Documents\01 Active Projects\TX-FTW-063586010 - US 84 (Waco Drive)\WAC 0055150724 - Design\Plan Set\5. Drainage\US84_CULVERT_GRD02.dgn
PLOTTED: 12/21/2020

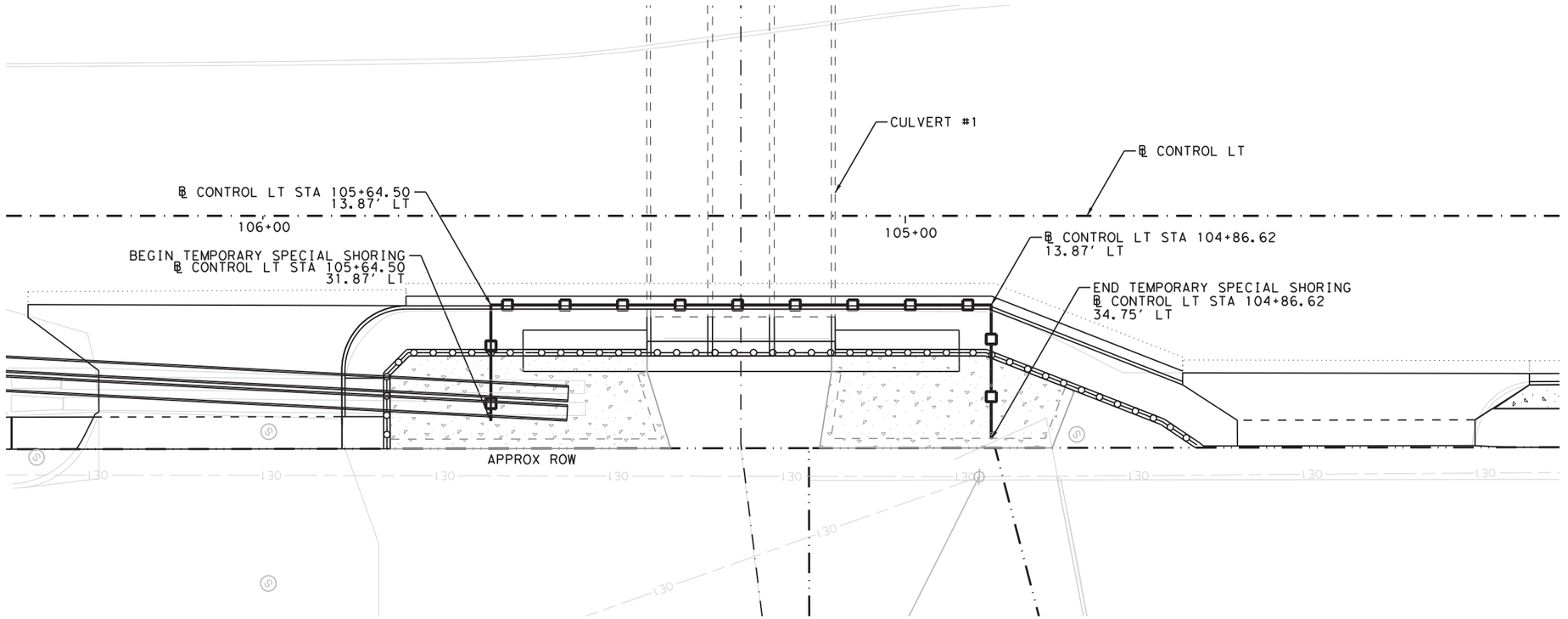

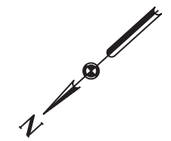

0' 10' 20' HORZ
0' 10' 20' VERT
SCALE

LEGEND

TEMPORARY SPECIAL SHORING

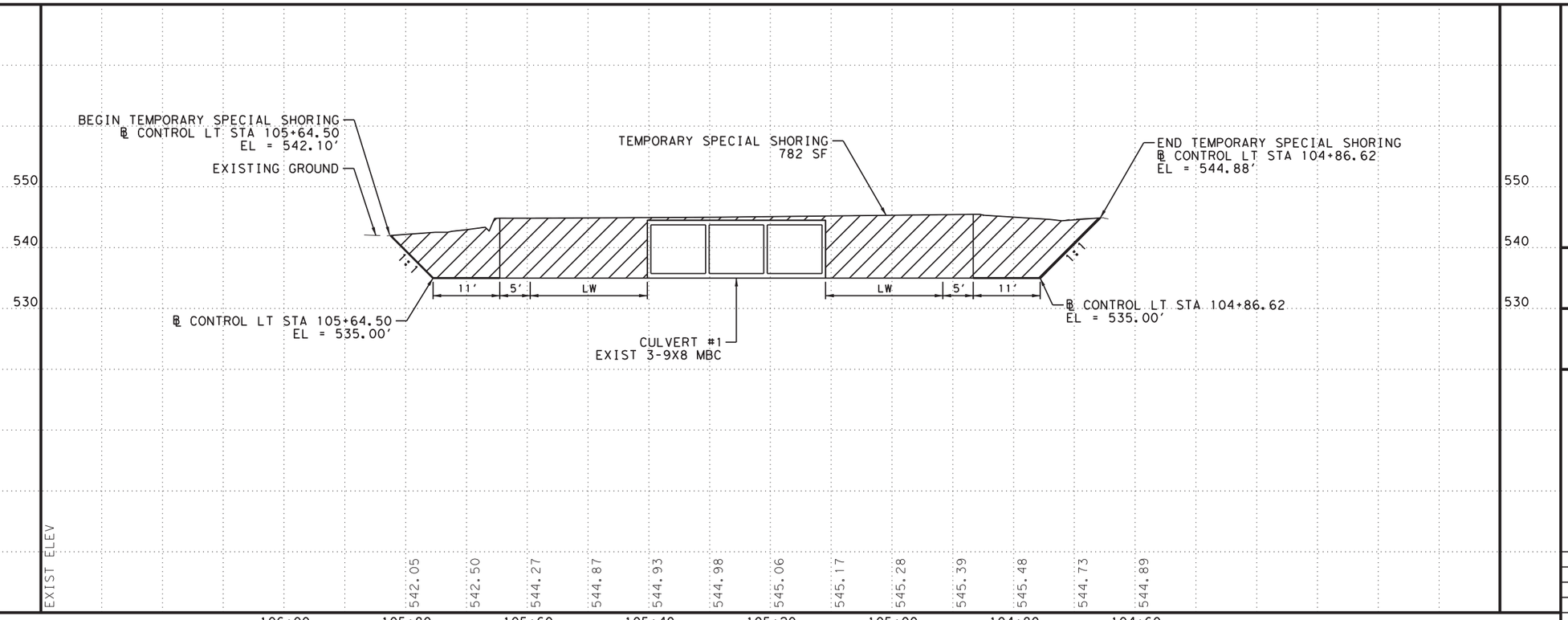

12/21/2020

Kimley»Horn F-928

© 2021

Texas Department of Transportation

TEMPORARY SPECIAL SHORING PLAN AND PROFILE CULVERT #1 (LT)

SHEET 1 OF 2

FED. RD. DIV. NO.	PROJECT ID.	HIGHWAY NO.
6	(SEE TITLE SHEET)	US 84

STATE	DIST.	COUNTY	SHEET NO.
TEXAS	WAC	MCLENNAN	199
CONT.	SECT.	JOB	
0055	15	072	

FILENAME: pw:\\kh-pw.bentley.com:kh-pw-01\Documents\01 Active Projects\TX-FTW-063586010 - US 84 (Waco Drive)\WAC 005515072\4 - Design\Plan Set\5. Drainage\US84_CULVERT_TS01.dgn
PLOTTED: 12/21/2020

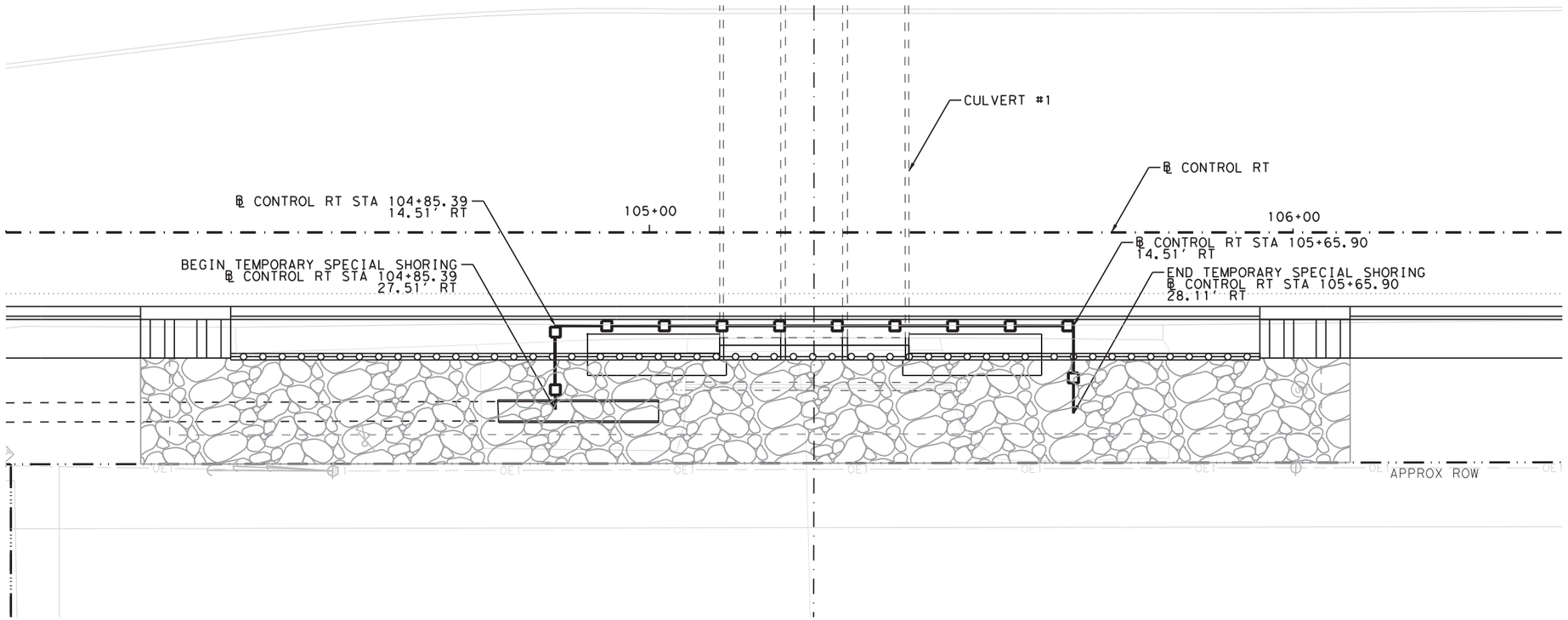

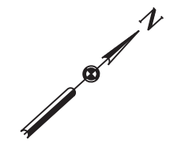

0' 10' 20' HORZ
0' 10' 20' VERT
SCALE

LEGEND

TEMPORARY SPECIAL SHORING

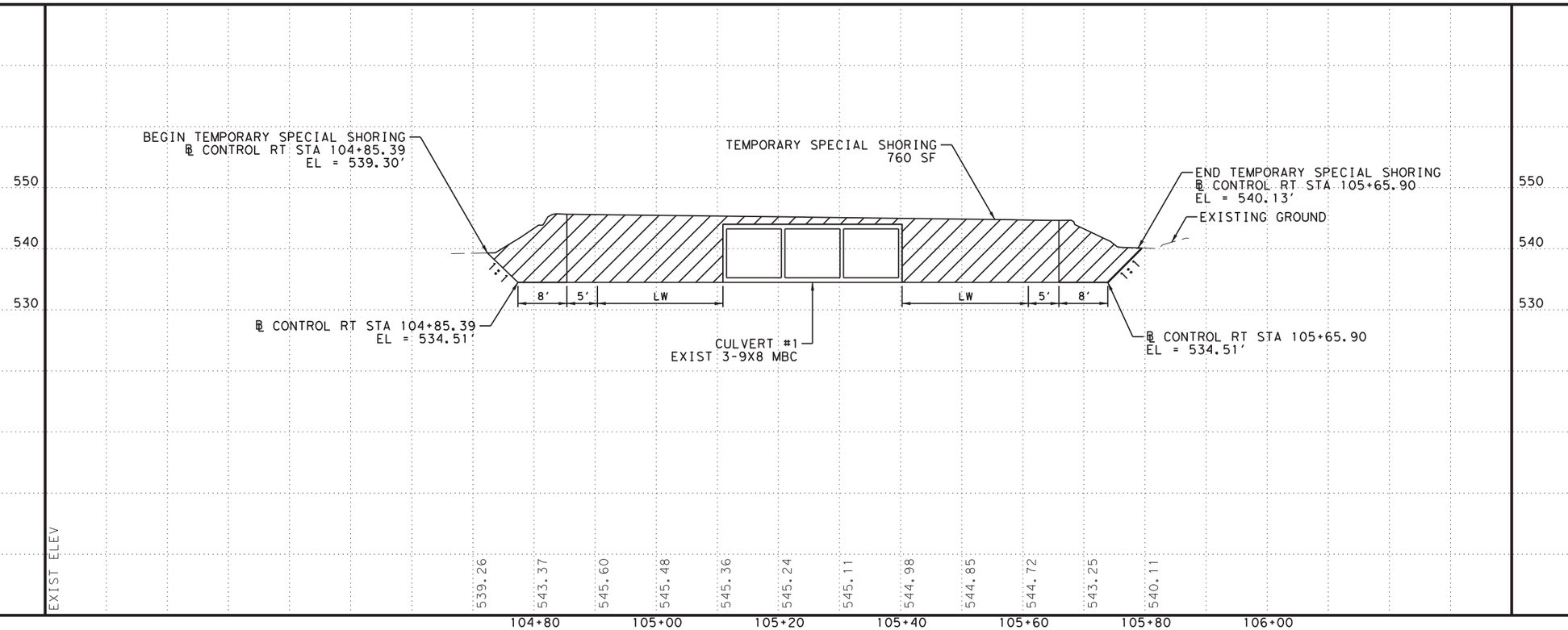

12/21/2020

Kimley»Horn F-928

© 2021

Texas Department of Transportation

TEMPORARY SPECIAL SHORING PLAN AND PROFILE CULVERT #1 (RT)

SHEET 2 OF 2

FED. RD. DIV. NO.	PROJECT ID.	HIGHWAY NO.
6	(SEE TITLE SHEET)	US 84

STATE	DIST.	COUNTY	SHEET NO.
TEXAS	WAC	MCLENNAN	200
CONT.	SECT.	JOB	
0055	15	072	

FILENAME: pw:\\kh-pw.bentley.com:kh-pw-01\Documents\01 Active Projects\TX-FTW-063586010 - US 84 (Waco Drive)\WAC 0055150724 - Design\Plan Set\S. Drainage\US84_CULVERT_TSS02.dgn
PLOTTED: 12/21/2020

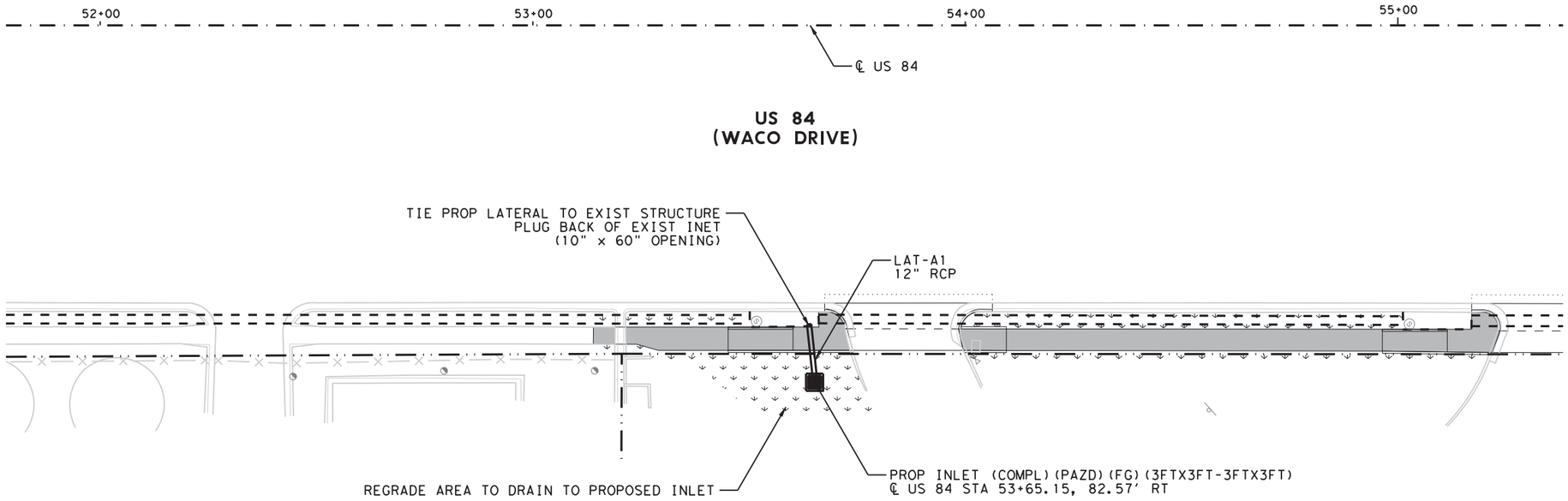

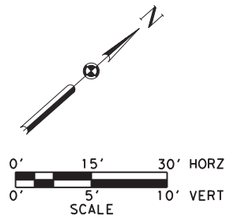

LEGEND

- PROP SIDEWALK CONSTRUCTION
- EXIST STORM SEWER
- PROP STORM SEWER
- PROP BLOCK SODDING
- RIPRAP (CONC)

NOTES:

1. STORM SEWER DESIGN BASED ON SURVEY AND AS-BUILT PLANS. CONTRACTOR TO VERIFY ALL EXISTING DRAINAGE STRUCTURES, PIPES AND FLOWLINES PRIOR TO CONSTRUCTION.
2. CONTRACTOR SHALL VERIFY ELEVATIONS AND DIMENSIONS IN THE FIELD PRIOR TO CONSTRUCTION.
3. DIMENSIONS SHOWN ARE APPROXIMATE. INLET LOCATION MAY BE ADJUSTED DUE TO FIELD CONDITIONS AT THE APPROVAL OF THE ENGINEER.
4. H&H CALCULATIONS NOT PERFORMED. EXIST DRAINAGE AREA, RUNOFF COEFF, AND DISCHARGE LESS THAN OR EQUAL TO EXIST.

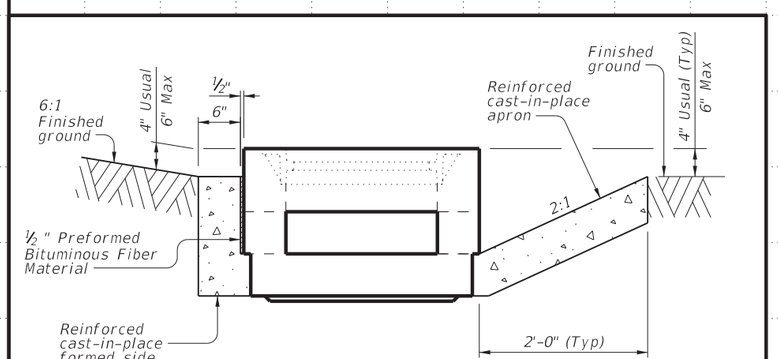

ELEVATION VIEW WITH FORMED SIDE

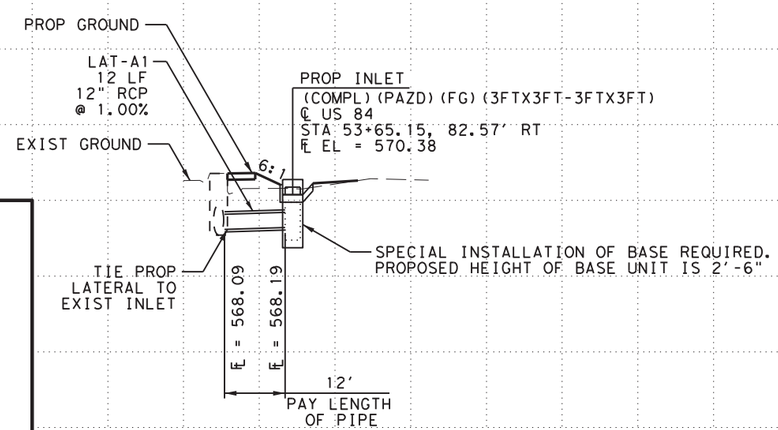

LATERAL-A1

585 580 575 570 565 560 555 550 545 540

12/21/2020

Kimley»Horn F-928

© 2021

Texas Department of Transportation

STORM SEWER PLAN AND PROFILE

BETWEEN FACTORY DR
AND N. INDUSTRIAL DR

SHEET 1 OF 3

FED. RD. DIV. NO.	PROJECT ID.	HIGHWAY NO.
6	(SEE TITLE SHEET)	US 84

STATE	DIST.	COUNTY	SHEET NO.
TEXAS	WAC	MCLENNAN	201
CONT.	SECT.	JOB	
0055	15	072	

FILENAME: pw:\\kh-pw.bentley.com:kh-pw-01\Documents\01 Active Projects\TX-FTW-063586010 - US 84 (Waco Drive)\WAC 0055150721\4 - Design\Plan Sets\5. Drainage\US84_DRN_SS01.dgn
PLOTTED: 12/21/2020

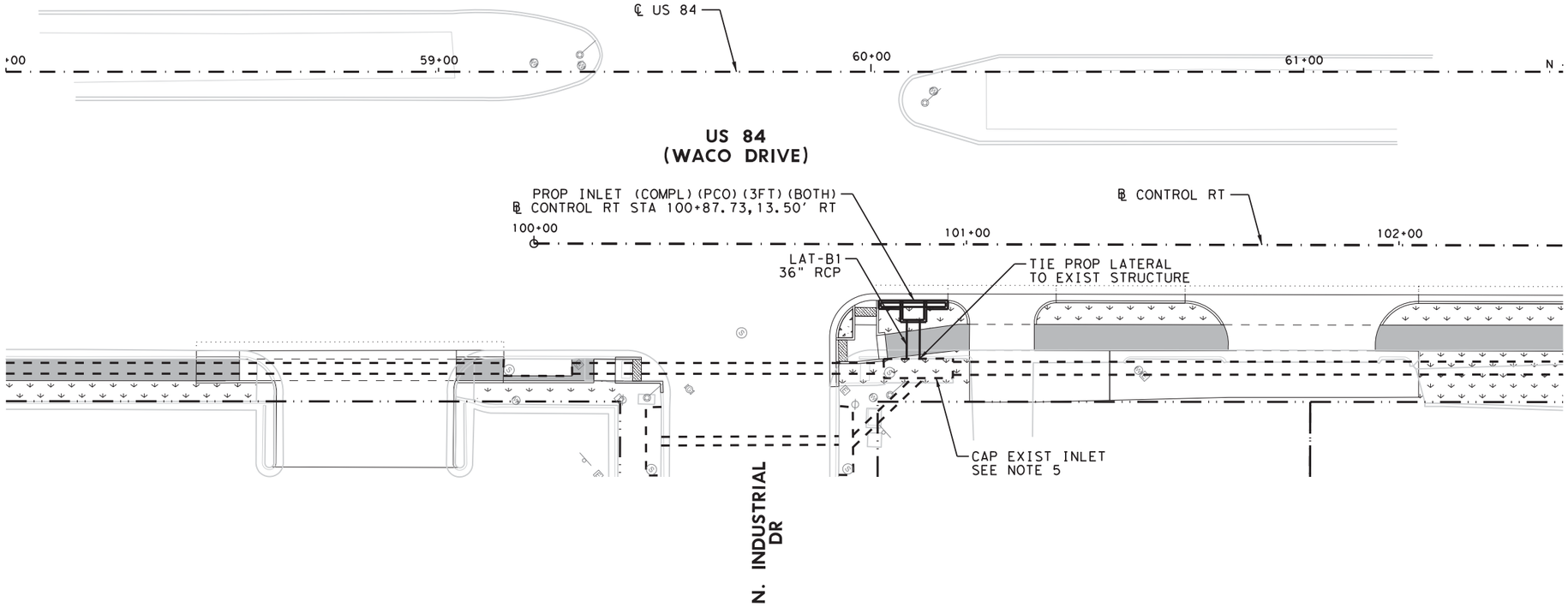

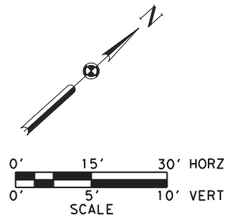

LEGEND

- PROP SIDEWALK CONSTRUCTION
- EXIST STORM SEWER
- PROP STORM SEWER
- PROP BLOCK SODDING
- RIPRAP (CONC)

NOTES:

1. STORM SEWER DESIGN BASED ON SURVEY AND AS-BUILT PLANS. CONTRACTOR TO VERIFY ALL EXISTING DRAINAGE STRUCTURES, PIPES AND FLOWLINES PRIOR TO CONSTRUCTION.
2. CONTRACTOR SHALL VERIFY ELEVATIONS AND DIMENSIONS IN THE FIELD PRIOR TO CONSTRUCTION.
3. DIMENSIONS SHOWN ARE APPROXIMATE. INLET LOCATION MAY BE ADJUSTED DUE TO FIELD CONDITIONS AT THE APPROVAL OF THE ENGINEER.
4. H&H CALCULATIONS NOT PERFORMED. EXIST DRAINAGE AREA, RUNOFF COEFF, AND DISCHARGE LESS THAN OR EQUAL TO EXIST.
5. REFER TO MANHOLE AND INLET CAP DETAILS SHEET FOR ADDITIONAL INFORMATION.

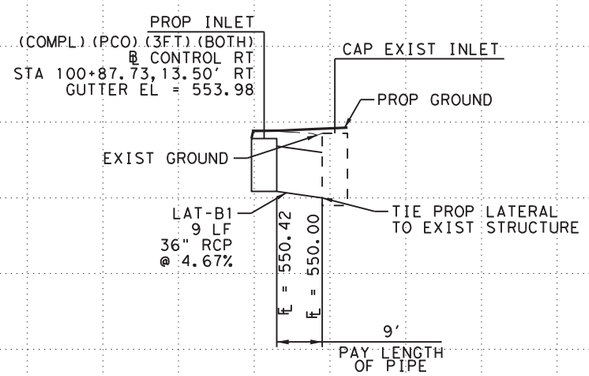

LATERAL-B1

STATE OF TEXAS
JOSHUA RUTH
103907
LICENSED
PROFESSIONAL ENGINEER

12/21/2020

Kimley»Horn F-928

© 2021

Texas Department of Transportation

STORM SEWER PLAN AND PROFILE

AT N INDUSTRIAL DR

SHEET 2 OF 3

FED. RD. DIV. NO.	PROJECT ID.	HIGHWAY NO.
6	(SEE TITLE SHEET)	US 84

STATE	DIST.	COUNTY	SHEET NO.
TEXAS	WAC	MCLENNAN	202
CONT.	SECT.	JOB	
0055	15	072	

FILENAME: pw:\\kh-pw.bentley.com:kh-pw-01\Documents\01 Active Projects\TX-FTW-063586010 - US 84 (Waco Drive)\WAC 0055150721\4 - Design\Plan Set\5. Drainage\US84_DRN_SS02.dgn
PLOTTED: 12/21/2020

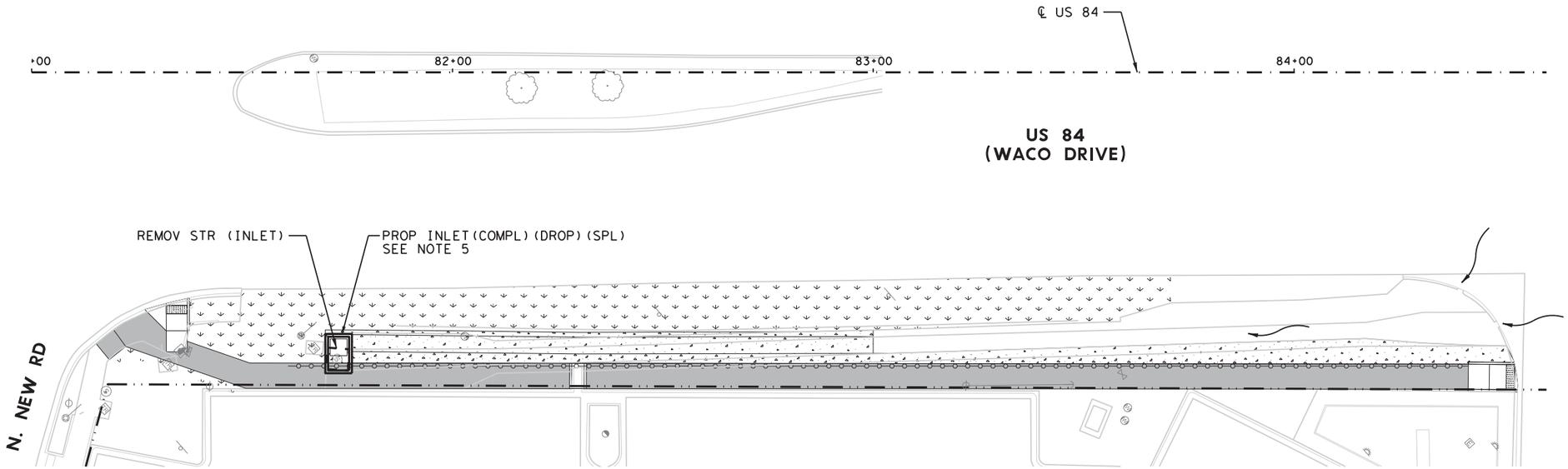

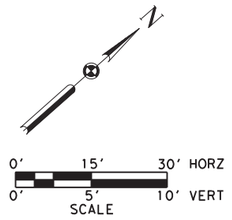

LEGEND

- PROP SIDEWALK CONSTRUCTION
- EXIST STORM SEWER
- PROP STORM SEWER
- PROP BLOCK SODDING
- RIPRAP (CONC)

NOTES:

1. STORM SEWER DESIGN BASED ON SURVEY AND AS-BUILT PLANS. CONTRACTOR TO VERIFY ALL EXISTING DRAINAGE STRUCTURES, PIPES AND FLOWLINES PRIOR TO CONSTRUCTION.
2. CONTRACTOR SHALL VERIFY ELEVATIONS AND DIMENSIONS IN THE FIELD PRIOR TO CONSTRUCTION.
3. DIMENSIONS SHOWN ARE APPROXIMATE. INLET LOCATION MAY BE ADJUSTED DUE TO FIELD CONDITIONS AT THE APPROVAL OF THE ENGINEER.
4. H&H CALCULATIONS NOT PERFORMED. EXIST DRAINAGE AREA, RUNOFF COEFF, AND DISCHARGE LESS THAN OR EQUAL TO EXIST.
5. REFER TO INLET(COMPL)(DROP)(SPL) SHEET FOR ADDITIONAL INFORMATION.

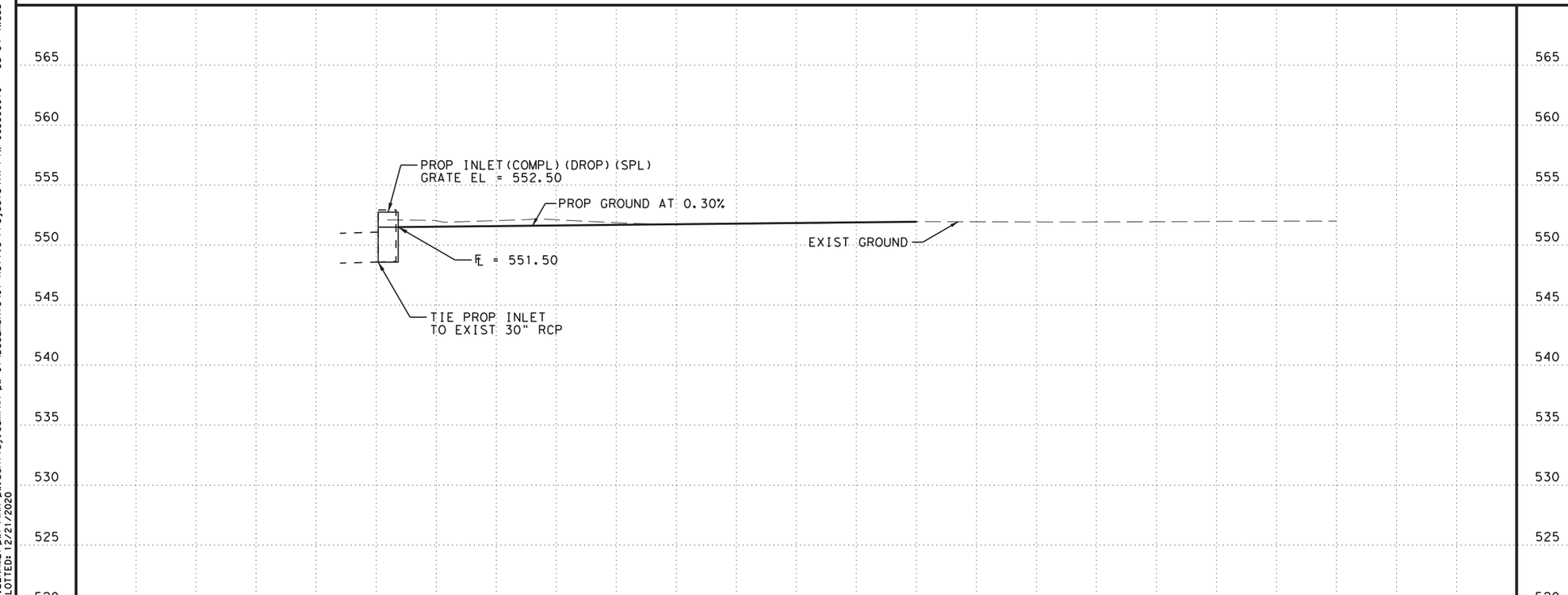

12/21/2020

Kimley»Horn F-928

© 2021 Texas Department of Transportation

STORM SEWER PLAN AND PROFILE

AT N NEW RD

SHEET 3 OF 3

FED.RD. DIV.NO.	PROJECT ID.	HIGHWAY NO.
6	(SEE TITLE SHEET)	US 84

STATE	DIST.	COUNTY	SHEET NO.
TEXAS	WAC	MCLENNAN	203
CONT.	SECT.	JOB	
0055	15	072	

FILENAME: pw:\\kh-pw.bentley.com:kh-pw-01\Documents\01 Active Projects\TX-FTW-063586010 - US 84 (Waco Drive)\WAC 005515072\4 - Design\Plan Set\5. Drainage\US84_DRN_SS03.dgn
PLOTTED: 12/21/2020

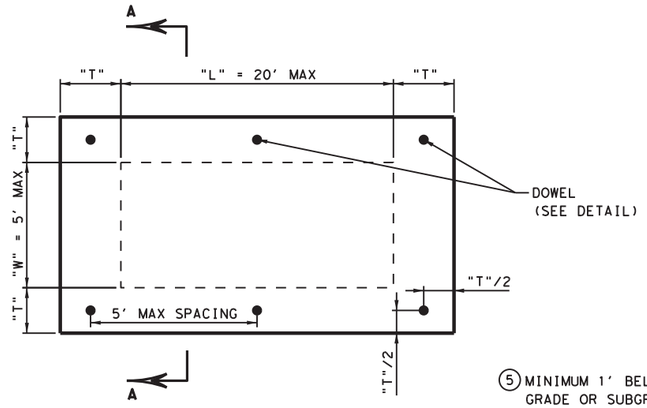

PLAN VIEW

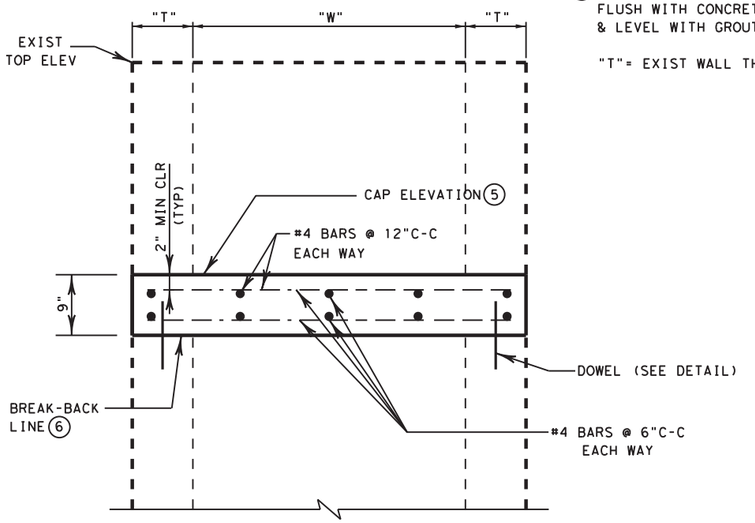

SECTION A-A

(5) MINIMUM 1' BELOW FINISHED GRADE OR SUBGRADE, UNLESS OTHERWISE APPROVED

(6) CUT EXISTING STEEL FLUSH WITH CONCRETE & LEVEL WITH GROUT.

"T"= EXIST WALL THICKNESS

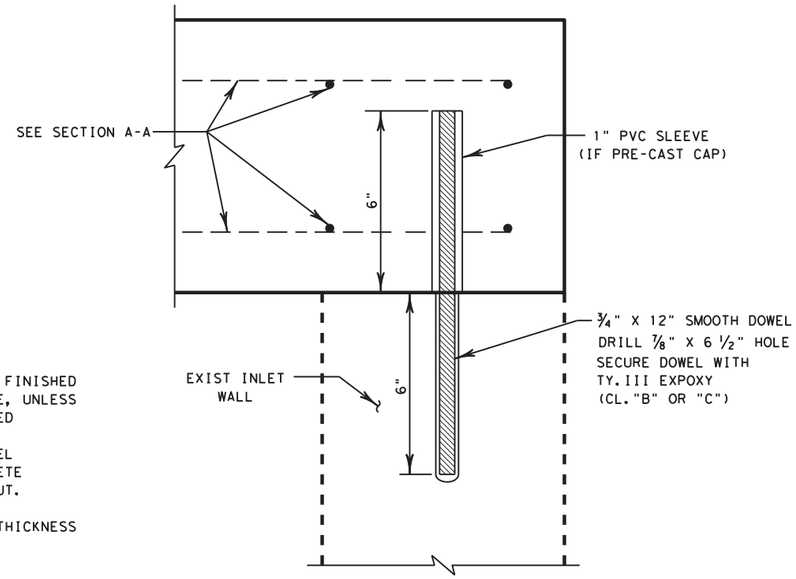

DOWEL DETAIL

MIN. - 4 EA. - PLACED AT CORNERS OF INLET OR MANHOLE FOR CURB INLETS, PLACE AT CORNERS AND AT 5'± C-C ALONG WALLS

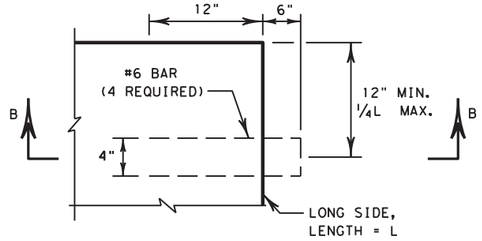

PLAN VIEW

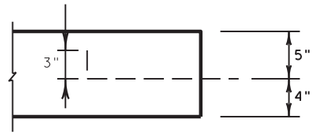

SECTION B-B

LIFTING LOOPS

USE WITH PRE-CAST CAP

GENERAL NOTES

1. USE CLASS "C" CONCRETE FOR CAST-IN-PLACE CAPS. USE CLASS "H" CONCRETE (MINIMUM DESIGN STRENGTH 5000 PSI) FOR PRECAST CAPS.
2. USE GRADE 60 STEEL FOR ALL REINFORCING.
3. MANHOLE AND INLET CAPS MAY BE CAST-IN-PLACE OR PRECAST. IF CAST-IN-PLACE, PERMANENT METAL DECK FORMS (PMFD) MAY BE USED. THE METHOD OF SUPPORTING PMFD TO BE APPROVED IN WRITING.

STATE OF TEXAS
JOSHUA RUTH
124631
LICENSED
PROFESSIONAL ENGINEER

12/21/2020

Kimley»Horn F-928

© 2021

Texas Department of Transportation

MANHOLE AND INLET CAP DETAILS

FED. RD. DIV. NO.	PROJECT ID.		HIGHWAY NO.
6	(SEE TITLE SHEET)		US 84
STATE	DIST.	COUNTY	SHEET NO.
TEXAS	WAC	MCLENNAN	204
CONT.	SECT.	JOB	
0055	15	072	

FILENAME: pw:\\kh-pw.bentley.com:kh-pw-01\Documents\01 Active Projects\TX-FTW-063586010 - US 84 (Waco Drive)\WAC 0055150724 - Design\Plan Set\5. Drainage\US84_DRN_DETAILS_01.dgn
PLOTTED: 12/21/2020

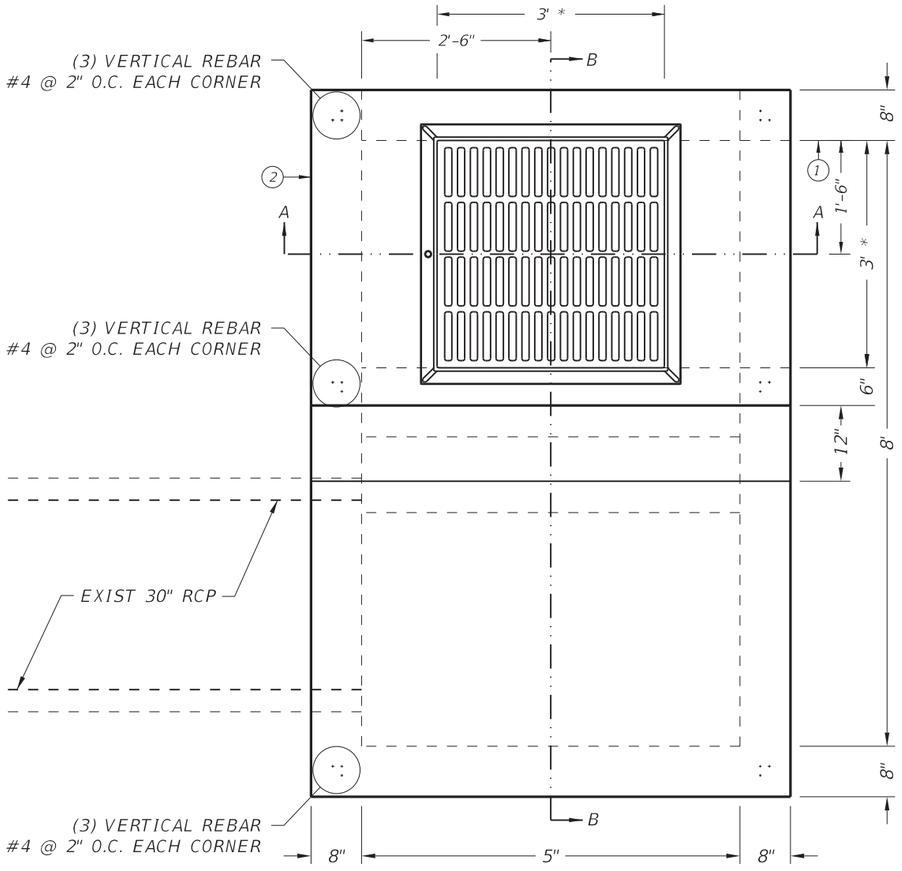

PLAN VIEW

* Nominal frame/grate size.

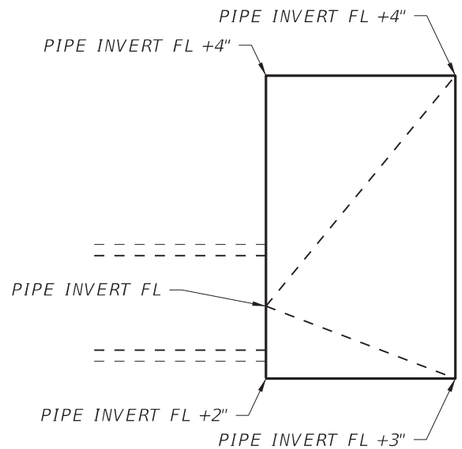

INVERT GRADING

See Installation Note 1

(1) Matches inside face of wall of base below inlet.

(2) 3'x6" inlet opening omitted at rear (South) face of box.

(3) Permissible construction joint.

FABRICATION NOTES:

1. Provide Class "H" concrete in accordance with Item 421 and having a minimum compressive strength of 5,000 psi.
2. Provide Grade 60 reinforcing steel or equivalent area of WWR.
3. Provide typical clear cover of 1 ½" to reinforcing steel at interior or exterior walls.
4. Walls or slabs with a thickness of 8" or greater require shrinkage and temperature reinforcing steel. Provide steel area = 0.11 in^2/ft each way.
5. No substitution is allowed for vertical and horizontal #4 bars in corners.
6. Inlet may be precast or cast-in-place.
7. Maximum spacing of reinforcement is 8".

INSTALLATION NOTES:

1. Invert grading to be provided by Contractor. Concrete or mortar used for invert grading is subsidiary to Item 465.
2. Seal tongue and groove joints with preformed or bulk mastic in conformance with Manufacturer's recommendations. Tongue and groove joints may be grouted no more than 1" between each section, or ½ the joint depth, whichever is greater.
3. Do not grout rubber gasket joints without Manufacturer's recommendation.
4. For rigid pipe, cut hole in base wall panel 4" Max, 2" Min larger than pipe OD.

GENERAL NOTES:

1. Designed according to ASTM C913.
2. Payment for inlet is per Item 465, "Junction Boxes, Manholes, and Inlets" section 5.2, "Complete Inlets."
3. Refer to Riprap Layout Between N New Rd and Loop 396 (N Valley Mills Dr) for additional information.
4. Refer to Storm Sewer Plan and Profile at N New Rd for additional information.
5. Refer TxDOT Standards PAZD, PB, and PDD for additional information.

Cover dimensions are clear dimensions, unless noted otherwise.

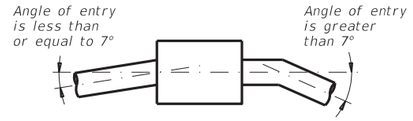

PIPE CONNECTION DETAIL

Connect pipes within 7° of normal to base wall. If necessary, use pipe elbow or curved approach alignment to stay within this limit.

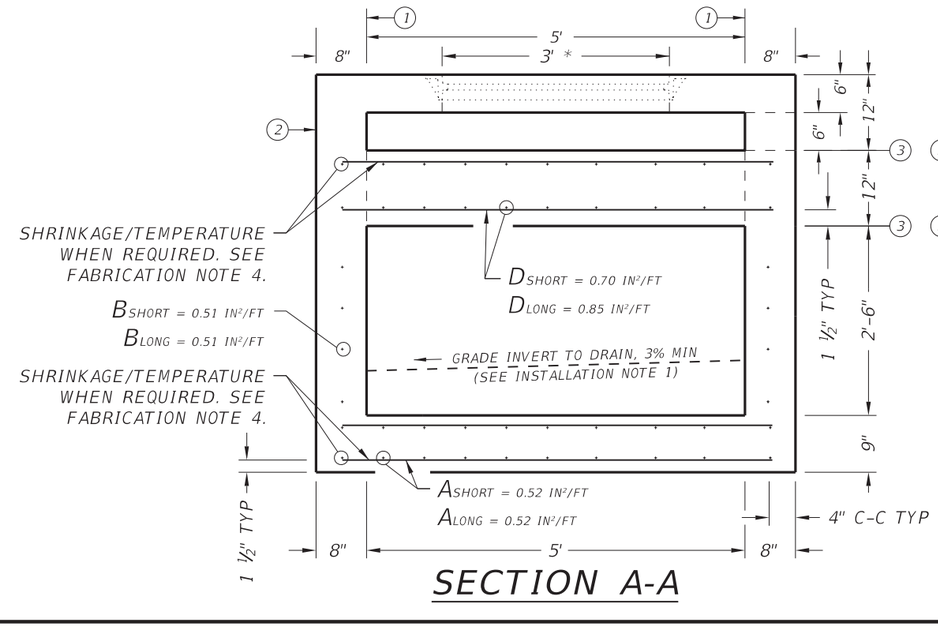

SECTION A-A

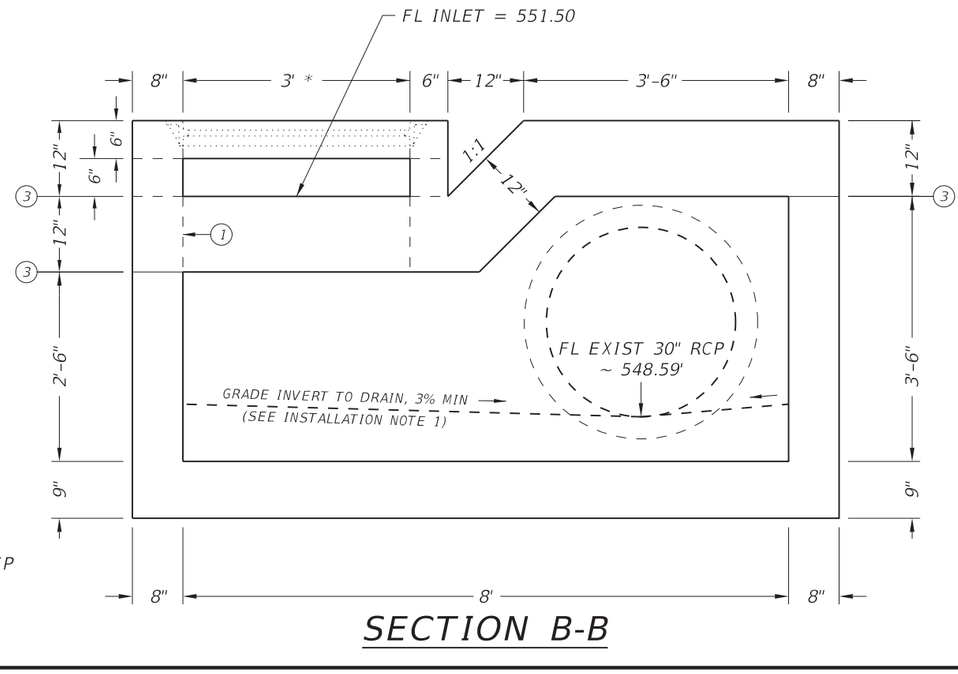

SECTION B-B

W. Travis Phemister
117182
LICENSED PROFESSIONAL ENGINEER
STATE OF TEXAS
12/21/2020

Kimley»Horn F-928

© 2021

Texas Department of Transportation

INLET(COMPL)(DROP)(SPL)

FED.RD. DIV.NO.	PROJECT ID.		HIGHWAY NO.
6	(SEE TITLE SHEET)		US 84
STATE	DIST.	COUNTY	SHEET NO.
TEXAS	WAC	MCLENNAN	205
CONT.	SECT.	JOB	
0055	15	072	

FILENAME: pw:\\kh-pw.bentley.com:kh-pw-01\Documents\01 Active Projects\TX-FTW-063586010 - US 84 (Waco Drive)\WAC 0055150724 - Design\Plan Set\5. Drainage\US84_DRN_DETAILS_02.dgn
PLOTTED: 12/21/2020

DISCLAIMER:
The use of this standard is governed by the "Texas Engineering Practice Act". No warranty of any kind is made by TxDOT for any purpose whatsoever. TxDOT assumes no responsibility for errors or omissions resulting from the use of this standard to other formats or for incorrect results or damages resulting from its use.

DATE: 12/21/2020
FILE: FILENAME: pw:\\kh-pw.bentley.com:kh-pw-01\Documents\01 Active Projects\TX-FTW-06358601\0 Aqua US 84 TWDG\Drainage\US84_DRN_CCO(MOD)01.dgn
PLOTTED: 12/21/2020

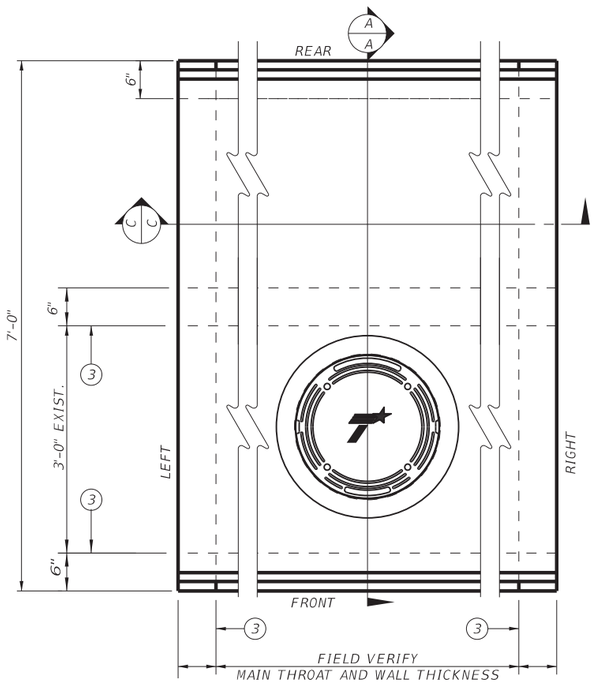

PLAN VIEW

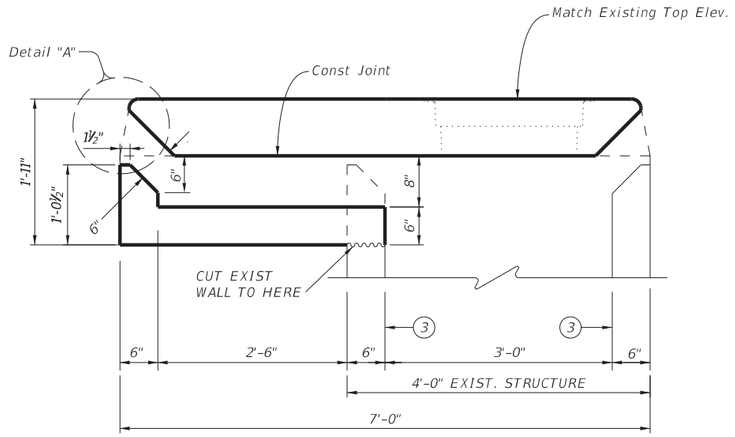

SIDE VIEW A-A

(Extensions not shown for clarity.)

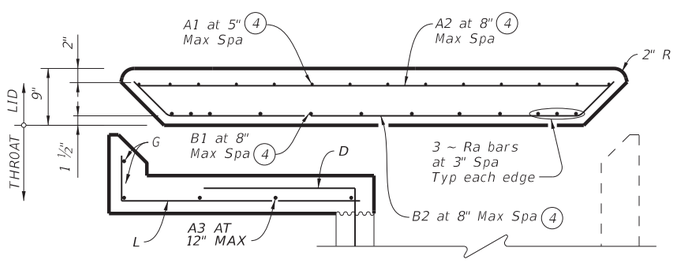

STRUCTURAL DET. THOUGH SECTION A-A

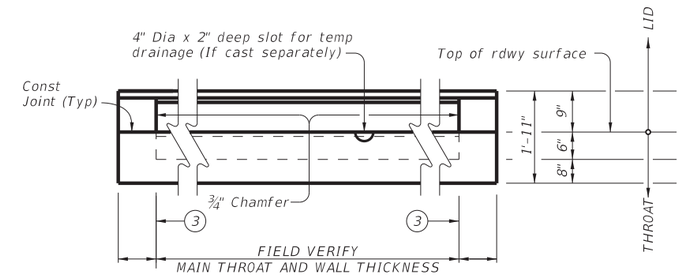

REAR VIEW

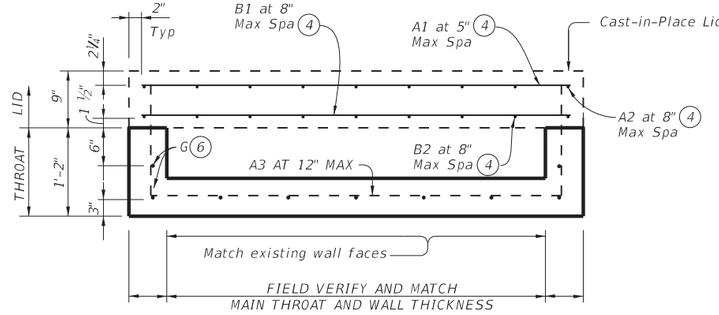

THROAT SECTION C-C

BAR TABLE	
BAR	SIZE
A1	#3
A2	#3
A3	#4
B1	#4
B2	#4
D	#4
G	#4
L	#4
Ra	#5

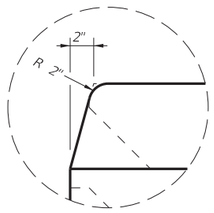

DETAIL "A"

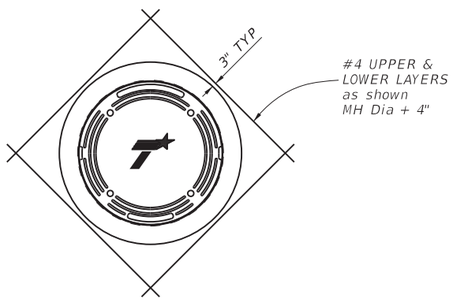

DETAIL AROUND MANHOLE (5)

BARS A3

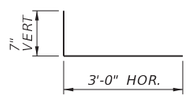

BARS L
(#4 @ 12" MAX)

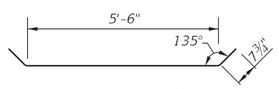

BARS B2 (4)

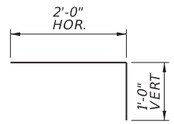

DOWELS D
(#4 @ 12" MAX)

CONSTRUCTION NOTES:
Chamfer all vertical edges of inlet lid ¾" as shown in Front/Rear View.
Maintain 1 ½" clear cover to ends of all vertical reinforcing bars, unless otherwise noted.

MATERIAL NOTES:
Provide Class "S" concrete (f'c = 4,000 psi).
Provide Grade 60 reinforcing steel or equivalent area of WWR.
Provide cast iron solid cover, unless noted otherwise elsewhere in the plans.

GENERAL NOTES:
Designed according to AASHTO LRFD Bridge Design Specifications.
The intent of this standard is to provide a cast-in-place lid to be used with precast base, precast riser or precast slab lid style "S1".
Inlet throat and lid are not intended for direct traffic. Do not place in roadway.
Lid and throat may be cast monolithically or separately.
See Precast Base (PB) standard for details and notes not shown.
See Precast Slab Lid (PSL) standard for details and notes not shown.
See Curb & Gutter Transitions Details (CGT-PCO) standard for transition examples.
Shop drawings for approval are not required.
Payment for inlet is per Item 465, "Junction Boxes, Manholes, and Inlets" by type, size, and extension placement.
Open area of added throat at rear to match the existing.
Cover dimensions are clear dimensions, unless noted otherwise.
Reinforcing bar dimensions shown are out-to-out of bar.

(1) Reinforcing bar used only with extension(s).
(2) Nominal ring and cover size.
(3) Matches inside face of wall of existing precast base or precast riser or precast slab lid (PSL) style "S1" below inlet.
(4) Cut reinforcing bars as needed to provide 1 ½" clear to manhole.
(5) Field verify and match existing manhole dimemeter and location.
(6) Dowel reinforcing bars G along this direction into existing walls for 1'-0".

12/21/2020

Kimley»Horn F-928

© 2021
Texas Department of Transportation

CAST-IN-PLACE CURB INLET OUTSIDE ROADWAY MODIFICATION (CCO MOD)

SHEET 1 OF 1

FED. RD. DIV. NO.	PROJECT ID.		HIGHWAY NO.
6	(SEE TITLE SHEET)		US 84
STATE	DIST.	COUNTY	SHEET NO.
TEXAS	WAC	MCLENNAN	206
CONT.	SECT.	JOB	
0055	15	072	

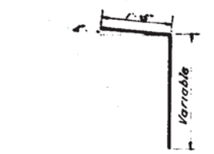

BARS "D"

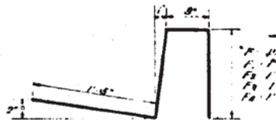

BARS "F"
At 4'-0"

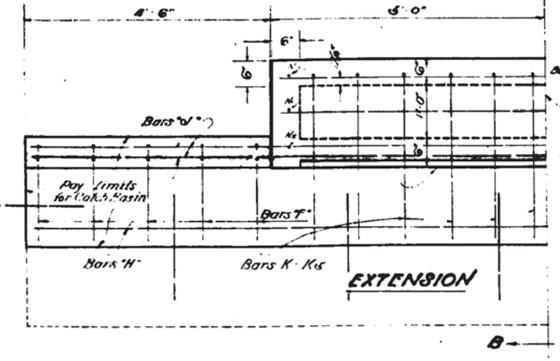

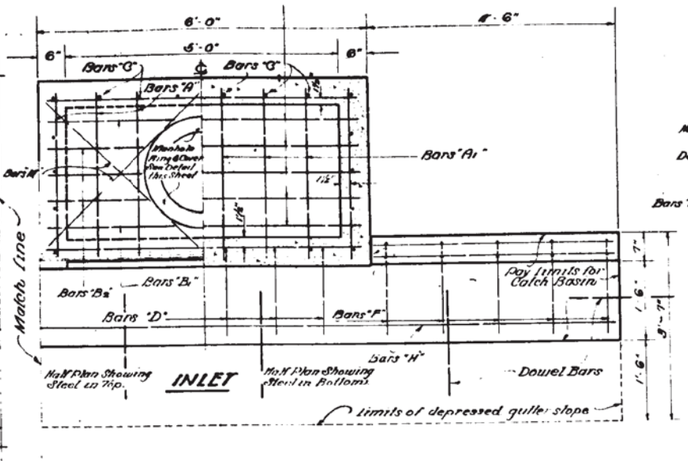

PLAN
(Showing Inlet and Extension)

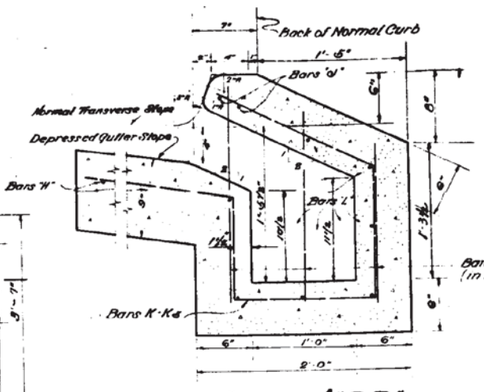

SECTION "B-B"
Thru Extension
Scale 1½" = 1'-0"

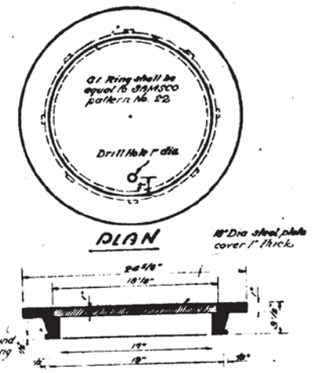

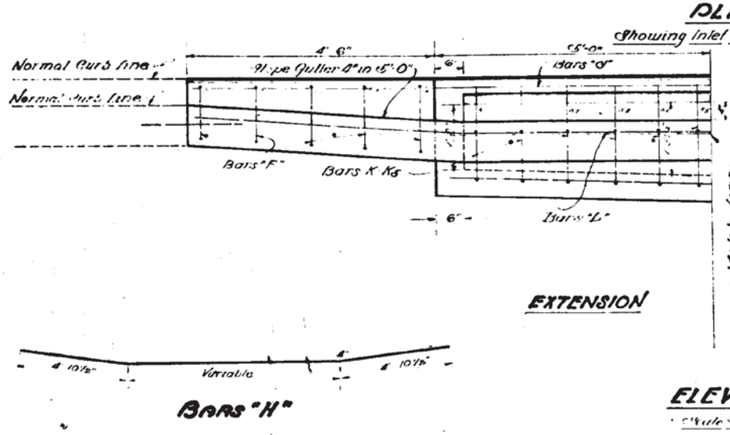

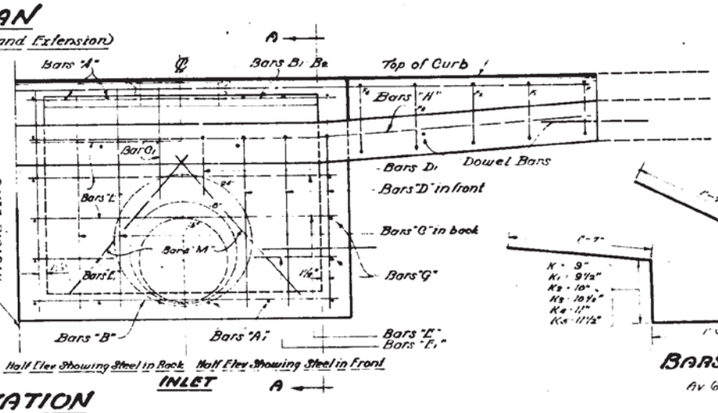

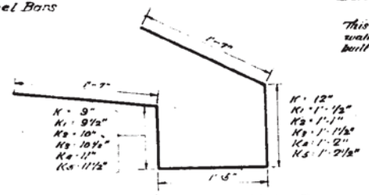

BARS "K·Ks"
Av 6' 6½"

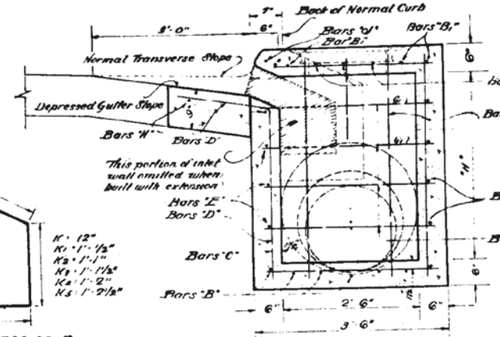

SECTION "A-A"
Thru Inlet
Scale ½" = 1'-0"

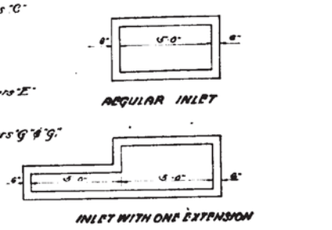

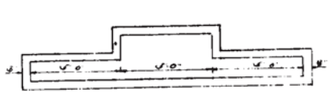

BARS "H"

ELEVATION
Scale ½" = 1'-0"

BILL OF REINFORCING STEEL

Bar	Size	Spacing	"H" = 3'-6" 15" Pipe in Front			15" Pipe in side			18" Pipe in front			18" Pipe in side			15" Pipe in front & 15" Pipe in Side			18" Pipe in front with one Extension			15" Pipe in front 24" in Side			"H" = 4'-0" 15" Pipe in Front & 15" Pipe in Back			18" Pipe in Front & 18" Pipe in Back			15" Pipe in Front & 18" Pipe in Back			18" Pipe in Front & 24" Pipe in Back			18" Pipe in front 24" in back with two Ext.			Bar
			No	Length	Wt	No	Length	Weight	No	Length	Weight	No	Length	Weight	No	Length	Weight	No	Length	Weight	No	Length	Weight	No	Length	Weight	No	Length	Weight	No	Length	Weight	No	Length	Weight	No	Length	Weight	
A	½"ø(4)	12"	6	2' 10"	11.36	6	2' 10"	11.36	6	2' 10"	11.36	6	2' 10"	11.36	6	2'-10"	11.36	6	2' 10"	11.36	6	2'-10"	11.86	6	2'-10"	11.36	6	2'-10"	11.36	6	2' 10"	11.36	6	2' 10"	11.36	6	2' 10"	11.36	A
A1	"	12"	8	3' 3"	17.37	8	3' 3"	17.37	8	5' 3"	17.37	8	3' 3"	17.37	8	5'-3"	17.37	8	5'-3"	17.37	8	3'-3"	17.37	8	3'-3"	17.37	8	3'-3"	17.37	8	3'-3"	17.37	8	3'-3"	17.37	8	3' 3"	17.37	B
B	"	6"	7	5' 9"	26.89	7	5' 9"	26.89	7	5'-9"	26.89	7	5' 9"	26.89	7	5'-9"	26.89	7	5'-9"	26.89	7	5'-9"	26.89	7	5'-9"	26.89	7	5'-9"	26.89	7	5'-9"	26.89	7	5'-9"	26.89	7	5' 9"	26.89	B1
B1	"	6"	3	5' 9"	11.52	3	5' 9"	11.52	3	5'-9"	11.52	3	5' 9"	11.52	3	5'-9"	11.52	3	5'-9"	11.52	3	5'-9"	11.52	3	5'-9"	11.52	3	5'-9"	11.52	3	5'-9"	11.52	3	5'-9"	11.52	3	5' 9"	11.52	B2
B2	"	6"	6	1' 9"	7.01	6	1' 9"	7.01	6	1'-9"	7.01	6	1' 9"	7.01	6	1'-9"	7.01	6	1'-9"	7.01	6	1'-9"	7.01	6	1'-9"	7.01	6	1'-9"	7.01	6	1'-9"	7.01	6	1'-9"	7.01	6	1' 9"	7.01	C
C	"	9"	14	4' 3"	39.75	11	4' 3"	31.23	14	4'-3"	39.75	11	4' 3"	31.23	11	4'-3"	31.23	13	4'-3"	36.91	10	4'-3"	28.39	2	2'-6"	5.34	4	2'-0"	5.36	3	2'-0"	4.01	C.
Q1	"	9"				3	2' 3"	4.51				3	2' 0"	4.01	3	2'-3"	4.51	1	2'-3"	1.50	4	1'-6"	4.01	6	5'-2"	20.71	6	5'-2"	20.71	6	5'-2"	20.71	D						D
D	"	9"	6	4' 8"	18.70	8	4' 8"	24.94	6	4'-8"	18.70	8	4' 8"	24.94	6	4'-8"	18.70	6	4'-8"	18.70	6	4'-8"	18.70	6	5'-2"	20.71	2	3'-9"	4.34	2	3'-0"	4.01	2	3'-0"	4.01	2	3' 0"	4.01	Q
D1	"	9"	2	2' 9"	3.67				2	2'-6"	3.34				2	2'-9	3.67	2	2'-6"	3.34	2	2'-9"	3.67	2	3'-3"	4.34	2	3'-0"	4.01	2	3'-0"	4.01	2	3'-0"	4.01	2	3' 0"	4.01	D
E	"	9"	6	5'-9"	23.05	7	5' 9"	26.89	5	5'-9"	19.21	7	5' 9"	26.89	6	5'-9"	23.05	5	5'-9"	19.21	6	5'-9"	23.05	7	5'-9"	26.89	5	5'-9"	19.21	6	5'-9"	23.05	5	5'-9"	19.21	4	5'-9"	15.36	E
E1	"	9"	2	1'-11"	2.56				4	1'-9"	4.68				2	1'-11"	2.56	4	1'-9"	4.68	2	1'-11"	2.56	7	5'-9"	26.89	6	5'-9"	23.05	8	1'-7"	8.46	8	1'-7"	8.06	E1
F-F4	"	12"	10	Av 4'-0"	26.72	10	Av 4'-0"	26.72	10	Av 4'-0"	26.72	10	Av 4'-0"	26.72	10	Av 4'-0"	26.72	10	Av 4'-0"	26.72	10	Av 4'-0"	26.72	4	1'-11"	5.11	8	1'-9"	9.35	6	1'-9"	7.01	8	1'-7"	8.46	8	1'-7"	8.06	E1
Q	"	9"	8	3' 3"	17.37	7	3' 3"	15.20	8	5' 3"	17.37	6	3' 3"	13.03	7	3'-8"	15.20	6	3'-3"	13.03	6	3'-3"	15.02	10	Av 4'-0"	26.72	10	Av 4'-0"	26.72	10	Av 4'-0"	26.72	10	Av 4'-0"	26.72	10	Av 4'-0"	26.72	F-F4
Q1	"	9"																2	1'-9"	2.34	2	1'-9"	2.34	10	3'-3"	21.71	10	3'-3"	21.71	10	3'-3"	21.71	10	3'-3"	21.71	10	3'-3"	21.71	Q
N	"	Shown	2	14'-9"	19.71	2	14'-9"	19.71	2	14'-9"	19.71	2	14'-9"	19.71	2	14'-9"	19.71	2	19'-9"	26.39	2	19'-9"	26.39	6	3'-3"	13.03	6	3'-3"	13.03	6	3'-3"	13.03	6	3'-3"	13.03	6	3'-3"	13.03	Q1
Q	"		2	14'-9"	19.71	2	14'-9"	19.71	2	14'-9"	19.71	2	14'-9"	19.71	2	14'-9"	19.71	2	19'-9"	26.39	2	19'-9"	26.39	2	1'-9"	2.34	2	1'-9"	2.34	2	1'-9"	2.34	2	1'-9"	2.34	2	1'-9"	2.34	N
K·Ks	"																	6	Av 6'-6½	26.22	Av 6'-6½		26.22	2	19'-9"	26.39	2	19'-9"	26.39	2	19'-9"	26.39	2	19'-9"	26.39	2	19'-9"	26.39	Q
L	"																	6	5'-3"	21.04	6	5'-3"	21.04	6	Av 6'-6½	26.22	Av 6'-6½		26.22	2	19'-9"	26.39	2	19'-9"	26.39	12	Av 6'-6½	52.44	N
M	"		6	5'-0"	12.02	6	3'-0"	12.02	6	5'-0"	12.02	6	5'-0"	12.02	6	3'-0"	12.02	6	5'-0"	12.02	6	5'-0"	12.02	6	5'-3"	21.04	6	5'-3"	21.04	6	5'-3"	21.04	6	5'-3"	21.04	12	5'-3"	42.08	K·Ks
N	"																	1	1'-6"	1.00	1	1'-6"	1.00	6	5'-3"	21.04	6	5'-3"	21.04	6	5'-3"	21.04	6	5'-3"	21.04	6	5'-3"	21.04	L
N1	"																	1	1'-9"	1.17	1	1'-9"	1.17	6	5'-0"	12.02	6	5'-0"	12.02	6	5'-0"	12.02	6	5'-0"	12.02	6	5'-0"	12.02	M
N2	"																	1	2'-0"	1.34	1	2'-0"	1.34	1	1'-6"	1.00	1	1'-6"	1.00	1	1'-6"	1.00	1	1'-6"	1.00	2	1'-6"	2.00	N
																								1	1'-9"	1.17	1	1'-9"	1.17	1	1'-9"	1.17	2	1'-9"	2.34	N1
																								1	2'-0"	1.34	1	2'-0"	1.34	1	2'-0"	1.34	2	2'-0"	2.67	N2
Dowels	3/4"ø		6	2' 0"	18.02	6	2'-0"	18.02	6	2'-0"	18.02	6	2'-0"	18.02	6	3'-0"	18.02	8	2'-0"	24.03	8	2'-0"	24.03	6	2'-0"	18.02	6	2'-0"	18.02	6	2'-0"	18.02	6	2'-0"	18.02	10	2'-0"	30.04	Dowels
																										294.52			290.75			292.58			285.51			419.77	
Reinforcing Steel Lb					275.03			273.10			273.98			276.43			269.25			340.18			336.21			2.74			2.71			2.73			2.68			4.04	
Class "A" Conc. C.Y.					2.62			2.62			2.61			2.61			2.59			3.29			3.21															

GENERAL NOTES

All concrete shall be Class "A"
All dimensions relating to reinforcing steel are to center of bars
Payment of Curb inlets and extensions thereto as shown on these plans will be made at the unit price bid for "Inlets", "Inlets with One Extension" & "Inlets with Two Extensions" as the case may be.

FOR CONTRACTOR'S INFORMATION ONLY

EXISTING CURB INLET DETAILS

TYPE E1

SHEET 1 OF 3

206A

BILL OF REINFORCING STEEL

H = 3'-6"

Bar	Size	Spa.	15" Pipe in Back			15" Pipe in Back (One Extension)			18" Pipe in Side (One Extension)			18" Pipe in Front (Two Extensions)		
			No.	Lgth.	Wt.	No.	Lgth.	Wt.	No.	Lgth.	Wt.	No.	Lgth.	Wt.
A	1/2 φ(4)	12"	6	2'-10"	11.36	6	2'-10"	11.36	6	2'-10"	11.36	6	2'-10"	11.36
A1	"	12"	8	3'-3"	17.37	8	3'-3"	17.37	8	3'-3"	17.37	8	3'-3"	17.37
B	"	6"	7	5'-9"	26.89	7	5'-9"	26.89	7	5'-9"	26.89	7	5'-9"	26.89
B1	"	6"	3	5'-9"	11.52	3	5'-9"	11.52	3	5'-9"	11.52	3	5'-9"	11.52
B2	"	6"	6	1'-9"	7.01	6	1'-9"	7.01	6	1'-9"	7.01	6	1'-9"	7.01
C	"	9"	12	4'-3"	34.09	12	4'-3"	34.09	11	4'-3"	31.23	12	4'-3"	34.09
C1	"	9"	2	2'-0"	2.67	2	2'-0"	2.67	3	2'-0"	4.00	2	1'-6"	2.00
D	"	9"	8	4'-8"	24.94	8	4'-8"	24.94	8	4'-8"	24.94	6	4'-8"	18.70
D1	"	9"										2	2'-6"	3.34
E	"	9"	6	5'-9"	23.05	6	5'-9"	23.05	7	5'-9"	26.89	5	5'-9"	19.21
E1	"	9"	2	1'-11"	2.66	2	1'-11"	2.66				4	1'-9"	4.68
F-F4	"	12"	10	Av.4'-0"	26.72	10	Av.4'-0"	26.72	10	Av.4'-0"	26.72	10	Av.4'-0"	26.72
G	"	9"	8	3'-3"	17.37	6	3'-3"	13.00	4	3'-3"	8.68	4	3'-3"	8.68
G1	"	9"				2	1'-9"	2.34	2	1'-9"	2.34	4	1'-9"	4.68
H	"	Shown	2	14'-9"	19.71	2	19'-9"	26.39	2	19'-9"	26.38	2	24'-9"	33.07
J	"	"	2	14'-9"	19.71	2	19'-9"	26.39	2	19'-9"	26.38	2	24'-9"	33.07
K-K5	"	"				6	Av.6'-6½"	26.22	6	Av.6'-6½"	26.22	12	Av.6'-6½"	52.44
L	"	"				6	5'-3	21.04	6	5'-3"	21.00	12	5'-8"	47.08
M	"	"	6	3'-0"	12.02	6	3'-0"	12.02	6	3'-0"	12.02	6	3'-0"	12.02
N	"	"				1	1'-6"	1.00	1	1'-6"	1.00	2	1'-6"	2.00
N1	"	"				1	1'-9"	1.17	1	1'-9"	1.17	2	1'-9"	2.34
N2	"	"				1	2'-0"	1.34	1	2'-0"	1.34	2	2'-0"	2.67
Dow.	3/4 φ(6)	"	6	2'-0"	18.02	8	2'-0"	24.03	8	2'-0"	24.03	10	2'-0"	30.04
Reinforcing Steel #					275.01			343.12			338.49			405.98
Class "A" Conc. Cu. Yds.					2.62			3.31			3.29			3.97

Bar	24" Pipe in Front (Two Extensions)			24" Pipe in Side			24" Pipe in Side (One Extension)			15" Pipe in Front 18" Pipe in Back			15" Pipe in Front 18" Pipe in Back (Two Extensions)		
	No.	Lgth.	Wt.	No.	Lgth.	Wt.	No.	Lgth.	Wt.	No.	Lgth.	Wt.	No.	Lgth.	Wt.
A	6	2'-10"	11.36	6	2'-10"	11.36	6	2'-10"	11.26	6	2'-10"	11.36	6	2'-10"	11.36
A1	8	3'-3"	17.37	8	3'-3"	17.37	8	3'-3"	17.37	8	3'-3"	17.37	8	3'-3"	17.37
B	7	5'-9"	26.89	7	5'-9"	26.89	7	5'-9"	26.89	7	5'-9"	26.89	7	5'-9"	26.89
B1	3	5'-9"	11.52	3	5'-9"	11.52	3	5'-9"	11.52	3	5'-9"	11.52	3	5'-9"	11.52
B2	6	1'-9"	7.01	6	1'-9"	7.01	6	1'-9"	7.01	6	1'-9"	7.01	6	1'-9"	7.01
C	12	4'-3"	34.09	11	4'-3"	31.23	10	4'-3"	28.39	12	4'-3"	34.09	10	4'-9"	31.70
C1	2	1'-6"	2.00	3	1'-6"	3.01	4	1'-6"	4.01	2	1'-6"	2.00	4	2'-6"	5.01
D	4	4'-8"	13.00	8	4'-8"	24.94	8	4'-8"	24.94	6	4'-8"	18.70	6	4'-8"	18.70
D1	4	2'-6"	6.68							2	2'-9"	3.67	2	2'-9"	3.67
E	5	5'-9"	19.21	7	5'-9"	26.89	7	5'-9"	26.89	4	5'-9"	16.36	4	5'-9"	16.36
E1	4	1'-9"	4.68							6	1'-9"	7.02	6	1'-9"	7.02
F-F4	10	Av.4'-0"	26.72	10	Av.4'-0"	26.72	10	Av.4'-0"	26.72	10	Av.4'-0"	26.72	10	Av.4'-0"	26.72
G	4	3'-3"	8.68	6	3'-3"	13.02	4	3'-3"	8.68	8	3'-3"	17.37	4	3'-3"	8.68
G1	4	1'-9"	4.68				2	1'-9"	2.34				4	1'-9"	4.68
H	2	24'-9"	33.07	2	14'-9"	19.71	2	19'-9"	26.39	2	14'-9"	19.71	2	24'-9"	33.07
J	2	24'-9"	33.07	2	14'-9"	19.71	2	19'-9"	26.39	2	14'-9"	19.71	2	24'-9"	33.07
K-K5	12	Av.6'-6½"	52.44				6	Av.6'-6½"	26.22				12	Av.6'-6½"	52.44
L	12	5'-3"	42.08				6	5'-3"	21.04				12	5'-3"	42.08
M	6	3'-0"	12.02	4	3'-0"	8.02	4	3'-0"	8.02	8	3'-0"	16.03	8	3'-0"	16.03
N	2	1'-6"	2.00				1	1'-6"	1.00				2	1'-6"	2.00
N1	2	1'-9"	2.34				1	1'-9"	1.17				2	1'-9"	2.34
N2	2	2'-0	2.67				1	2'-0"	1.34				2	2'-0"	2.67
Dow.	10	2'-0"	30.04	6	2'-0"	18.02	8	2'-0"	24.03	6	2'-0"	18.02	10	2'-0"	30.04
Reinforcing Steel #			403.62			265.42			331.72			272.65			409.43
Class "A" Conc. Cu. Yds.			3.93			2.57			3.25			2.57			3.93

Bar	15" Pipe in Front 15" Pipe in Back						H = 4'-0": 15" Pipe in Front 15" Pipe in Back (One Extension)			H = 4'-0": 24" Pipe in Side (Two Extension)			
	No.	Lgth.	Wt.	No	Lgth.	Wt.	No.	Lgth.	Wt.	No.	Lgth.	Wt.	
A	6	2'-10"	11.36				6	2'-10"	11.36	6	2'-10"	11.36	A
A1	8	3'-3"	17.37				8	3'-3"	17.37	8	3'-3"	17.37	A1
B	7	5'-9"	26.89				7	5'-9"	26.89	7	5'-9"	26.89	B
B1	3	5'-9"	11.52				3	5'-9"	11.52	3	5'-9"	11.52	B1
B2	6	1'-9"	7.01				6	1'-9"	7.01	6	1'-9"	7.01	B2
C	12	4'-9"	34.09				11	4'-9"	34.87	10	4'-9"	31.73	C
C1	2	2'-0"	2.67				3	2'-6"	5.01	4	2'-0"	5.34	C1
D	6	4'-8"	18.70				6	5'-3"	20.71	8	5'-2"	27.60	D
D1	2	2'-6"	3.34				2	3'-3"	4.34				D1
E	3	5'-9"	11.52				7	5'-9"	26.89	9	5'-9"	34.56	E
E1	8	1'-9"	9.36				4	1'-11"	5.11				E1
F-F4	10	Av.4'-0"	26.72				10	Av.4'-0"	26.72	10	Av.4'-0"	26.72	F-F4
G	8	3'-3"	17.37				6	3'-9"	13.03	4	3'-3"	8.68	G
G1							4	1'-9"	4.68	4	1'-9"	4.68	G1
H	2	14'-9"	19.71				2	19'-9"	26.39	2	24'-9"	33.07	H
J	2	14'-9"	19.71				2	19'-9"	26.39	2	24'-9"	33.07	J
K-K5							6	Av.6'-6½"	26.22	12	Av.6'-6½"	52.44	K-K5
L							6	5'-3"	21.04	12	5'-3"	42.08	L
M	8	3'-0"	16.03				8	3'-0"	16.03	4	3'-0"	8.02	M
N							1	1'-6"	1.00	2	1'-6"	2.00	N
N1							1	1'-9"	1.17	2	1'-9"	2.34	N1
N2							1	2'-0"	1.34	2	2'-0"	2.67	N2
Dow.	6	2'-0"	18.02				8	2'-0"	24.03	10	2'-0"	30.04	Dow
Reinforcing Steel #			271.39						359.12			419.19	
Class "A" Conc. Cu. Yds.			2.56						3.02			4.09	

H = 3'6" with One Extension

Bar	Size	Spa	15" Pipe in Front			15" Pipe in Side			24" Pipe in Front					
			No.	Lgth.	Wt.	No.	Lgth.	Wt.	No.	Lgth.	Wt.			
A	4	12"	6	2'-10"	11.36	6	2'-10"	11.36	6	2'-10"	11.36			
A1	4	12"	8	3'-3"	17.37	8	3'-3"	17.37	8	3'-3"	17.37			
B	4	6"	7	5'-9"	26.89	7	5'-9"	26.89	7	5'-9"	26.89			
B1	4	6"	3	5'-9"	11.52	3	5'-9"	11.52	3	5'-9"	11.52			
B2	4	6"	6	1'-9"	7.01	6	1'-9"	7.01	6	1'-9"	7.01			
C	4	9"	13	4'-3"	36.91	10	4'-3"	28.39	13	4'-3"	36.91			
C1	4	9"	1	2'-3"	1.50	4	2'-3"	6.01	1	2'-3"	1.50			
D	4	9"	6	4'-8"	18.70	8	4'-8"	24.94	4	4'-8	12.47			
D1	4	9"	2	2'-9"	3.67				4	2'-6"	6.68			
E	4	9"	6	5'-9"	23.09	7	5'-9"	26.89	5	5'-9"	19.21			
E1	4	9"	2	1'-11"	2.56				4	1'-7"	4.23			
F-F4	4	12"	10	Av.4'-0"	26.72	10	Av.4'-0"	26.72	10	Av.4'-0"	26.72			
G	4	9"	8	3'-3"	17.37	5	3'-3"	10.86	8	3'-3"	17.37			
G1	4	9"				2	1'-9"	2.34						
H	4	Shown	2	19'-9"	26.39	2	19'-9"	26.39	2	19'-9"	26.39			
J	4	"	2	19'-9"	26.39	2	19'-9"	26.39	2	19'-9"	26.39			
K-K6	4	"	6	Av.6'-6½"	26.22	6	Av.6'-6½"	26.22	6	Av.6'-6½"	26.22			
L	4	"	6	5'-3"	21.04	6	5'-3"	21.04	6	5'-3"	21.04			
M	4	"	6	3'-0"	12.02	6	3'-0"	12.02	6	3'-0"	12.02			
N	4	"	1	1'-6"	1.00	1	1'-6"	1.00	1	1'-6"	1.00			
N1	4	"	1	1'-9"	1.17	1	1'-9"	1.17	1	1'-9"	1.17			
N2	4	"	1	2'-0"	1.34	1	2'-0"	1.34	1	2'-0"	1.34			
Dow.	6	"	8	2'-0"	24.03	8	2'-0"	24.03	8	2'-0"	24.03			
Reinforcing Steel #					344.23			339.90			338.84			
Class "A" Conc. Cu. Yd.					3.31			3.31			3.25			

H = 3'-6" with Two Extensions

Bar	15" Pipe in Side			15" Pipe in Front			18" Pipe in Front			18" Pipe in Back			
	No.	Lgth.	Wt.	No.	Lgth.	Wt.	No.	Lgth.	Wt.	No.	Lgth.	Wt.	
A	6	2'-10"	11.36	6	2'-10"	11.36	6	2'-10"	11.36	6	2'-10"	11.36	A
A1	8	3'-3"	17.37	8	3'-3"	17.37	8	3'-3"	17.37	8	3'-3"	17.37	A1
B	7	5'-9"	26.89	7	5'-9"	26.89	7	5'-9"	26.89	7	5'-9"	26.89	B
B1	3	5'-9"	11.52	3	5'-9"	11.52	3	5'-9"	11.52	3	5'-9"	11.52	B1
B2	6	1'-9"	7.01	6	1'-9"	7.01	6	1'-9"	7.01	6	1'-9"	7.01	B2
C	10	4'-3"	28.39	12	4'-3"	34.07	12	4'-3"	34.07	10	4'-3"	34.07	C
C1	4	2'-3"	6.01	2	2'-3"	3.00	2	2'-3"	3.00	4	2'-0"	3.00	C1
D	8	4'-8"	24.94	6	4'-8"	18.70	6	4'-8"	18.70	8	4'-8"	24.94	D
D1				2	2'-9"	3.67	2	2'-6"	3.34				D1
E	7	5'-9"	26.89	6	5'-9"	23.05	5	5'-9"	19.21	5	5'-9"	19.21	E
E1				2	1'-11"	2.56	4	1'-9"	4.68	4	1'-9"	4.68	E1
F-F4	10	Av.4'-0"	26.72	10	Av.4'-0"	26.72	10	Av.4'-0"	26.72	10	Av.4'-0"	26.72	F-F4
G	5	3'-3"	10.86	8	3'-3"	17.37	8	3'-3"	17.37	8	3'-3"	17.37	G
G1	2	1'-9"	2.34										G1
H	2	24'-9"	33.07	2	24'-9"	33.07	2	24'-9"	33.07	2	24'-9"	33.07	H
J	2	24'-9"	33.07	2	24'-9"	33.07	2	24'-9"	33.07	2	24'-9"	33.07	J
K-K6	12	Av.6'-6½"	52.44	12	Av.6'-6½"	52.44	12	Av.6'-6½"	52.44	12	Av.6'-6½"	52.44	K-K6
L	12	5'-3"	42.08	12	5'-3"	42.08	12	5'-3"	42.08	12	5'-3"	42.08	L
M	6	3'-0"	12.02	6	3'-0"	12.02	6	3'-0"	12.02	6	3'-0"	12.02	M
N	2	1'-6"	2.00	2	1'-6"	2.00	2	1'-6"	2.00	2	1'-6"	2.00	N
N1	2	1'-9"	2.34	2	1'-9"	2.34	2	1'-9"	2.34	2	1'-9"	2.34	N1
N2	2	2'-0"	2.68	2	2'-0"	2.68	2	2'-0"	2.68	2	2'-0"	2.68	N2
Dow.	10	2'-0"	30.04	10	2'-0"	30.04	10	2'-0"	30.04	10	2'-0"	30.04	Dow
Reinforcing Steel #			410.04			413.03			410.98			413.88	
Class "A" Conc. Cu. Yd.			3.95			3.95			3.97			3.97	

FOR CONTRACTOR'S INFORMATION ONLY

EXISTING CURB INLET DETAILS

TYPE E1

SHEET 2 OF 3

206B

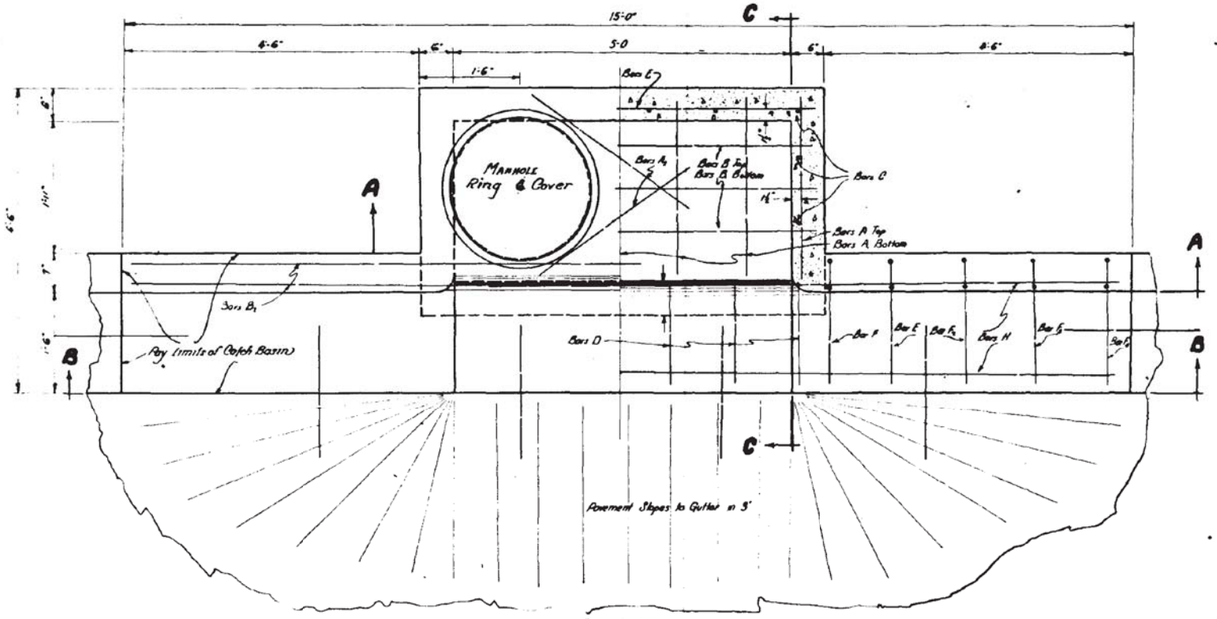

PLAN

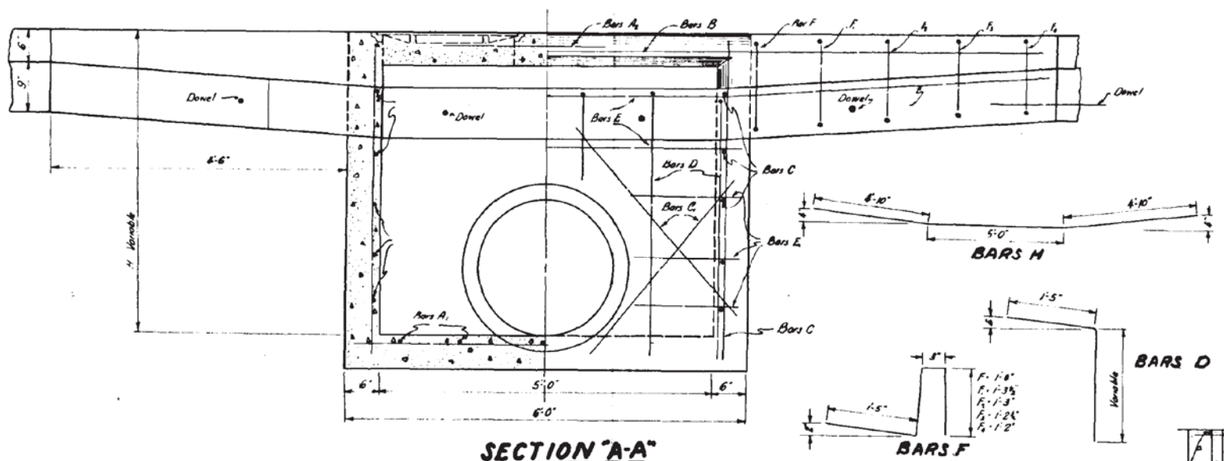

SECTION "A-A"

BARS H

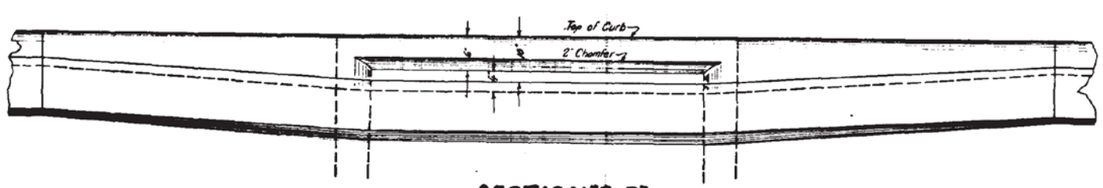

SECTION "B-B"

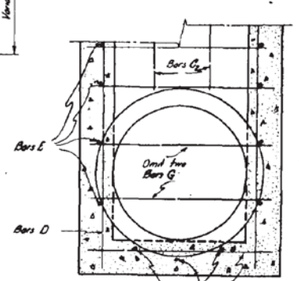

SECTION "C-C"
Showing Side Installation

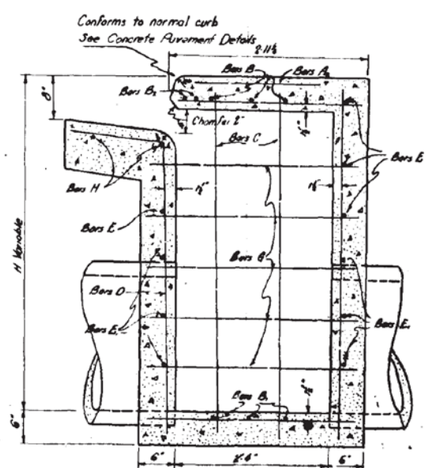

SECTION "C-C"
Showing Normal Installation

BILL OF REINFORCING STEEL

			H. 6'-0"																			
			15" Pipe Front			18" Pipe Back			18" Pipe Side			18" Pipe Bench 24" Pipe Front			24" Pipe Bench 30" Pipe Back							
Bars	Size	Spacing	No	Length	Wgt	No	Length	Wgt	No	Length	Wgt	No	Length	Wgt	No	Length	Wgt					
A	¾ ϕ	12"	4	2'-9"	7.35	4	2'-9"	7.35	4	2'-9"	7.35	6	2'-9"	7.35	6	2'-9"	7.35					
A	-	12"	5	3'-1"	10.29	5	3'-1"	10.29	5	3'-1"	10.29	5	3'-1"	10.29	5	3'-1"	10.29					
A_2	-	Shown	2	2'-9"	3.67	2	2'-9"	3.67	2	2'-9"	3.67	2	2'-9"	3.67	2	2'-9"	3.67					
B	-	6"	3	3'-5"	6.51	3	3'-5"	6.51	3	3'-5"	6.51	3	3'-5"	6.51	3	3'-5"	6.51					
B_1	-	6"	3	5'-9"	11.52	3	5'-9"	11.52	3	5'-9"	11.52	3	5'-9"	11.52	3	5'-9"	11.52					
B_2	-	Shown	2	16'-9"	19.71	2	16'-9"	19.71	2	16'-9"	19.71	2	16'-9"	19.71	2	16'-9"	19.71					
C	-	12"	10	6'-3"	22.39	8	6'-3"	22.71	8	6'-3"	22.71	8	6'-3"	22.71	8	6'-3"	22.71					
C_1	-	Shown	4	3'-6"	9.35	4	3'-6"	18.70	~			8	3'-6"	18.70	8	3'-6"	18.70					
C_2	-	12"	~			2	2'-0"	2.67	2	2'-0"	6.67	2	2'-0"	6.67	2	2'-0"	6.67					
D	-	12"	4	4'-8"	12.67	6	4'-8"	18.70	6	4'-8"	18.70	4	4'-8"	12.67	4	4'-8"	12.67					
D	-	12"	2	2'-3"	3.67	~			~			2	2'-2"	2.89	~							
E	-	9"	8	5'-9"	30.73	8	5'-9"	30.73	10	5'-8"	38.41	5	5'-9"	19.21	2	5'-9"	7.68					
E_1	-	9"	4	1'-10"	4.80	4	1'-10"	4.80	~			4 6	1'-10" 1'-7"	8.96	16	1'-4"						
$F-F_6$	-	12"	10		19.48	10		19.48	10		19.48	10		19.48	10		19.48					
G	-	9"	8	3'-1"	16.48	8	3'-1"	16.48	6	3'-1"	12.36	8	3'-1"	16.48	8	3'-1"	16.48					
H	-	Shown	2	16'-8"	19.59	2	16'-8"	19.59	2	16'-8"	19.58	2	16'-8"	19.59	2	16'-8"	19.59					
Dowels	¾ In.	Shown	6	2'-0"	18.02	6	2'-0"	18.02	6	2'-0"	18.02	6	2'-0"	18.02	6	2'-0"	18.02					
Reinf. Steel Lbs			222.13			231.05			214.99			226.52			195.52							
Class A Conc. CY			2.44			2.46			2.46			2.35			2.22							

			H. 4'-3"			H. 6'-6"					
			18" Pipe Front 30" Pipe Back			18" Pipe Front 18" Pipe Back			24" Pipe Front 24" Pipe Back		
Bars	Size	Spacing	No	Length	Wgt	No	Length	Wgt	No	Length	Wgt
A	¾ ϕ	12"	6	2'-9"	7.35	6	2'-9"	7.35	6	2'-9"	7.35
A	-	12"	5	3'-1"	10.29	5	3'-1"	10.29	5	3'-1"	10.29
A_2	-	Shown	2	2'-9"	3.67	2	2'-9"	3.67	2	2'-9"	3.67
B	-	6"	3	3'-5"	6.51	3	3'-5"	6.51	3	3'-5"	6.51
B_1	-	6"	3	5'-9"	11.52	3	5'-9"	11.52	3	5'-9"	11.52
B_2	-	Shown	2	16'-9"	19.71	2	16'-9"	19.71	2	16'-9"	19.71
C	-	12"	8	6'-8"	24.05	8	6'-9"	25.38	8	6'-9"	25.38
C_1	-	Shown	8	3'-6"	18.70	8	3'-6"	18.70	8	3'-6"	18.70
C_2	-	12"	2	1'-3"	1.87	2	2'-6"	3.38	2	2'-0"	2.67
O	-	12"	4	4'-11"	13.16	4	5'-2"	13.81	4	5'-8"	13.81
D	-	12"	2	2'-9"	3.67	2	3'-0"	4.01	2	2'-6"	3.34
L	-	9"	4	5'-9"	15.36	6	5'-9"	23.05	4	5'-9"	15.36
L_1	-	9"	6 6	7'-10" 1'-8"	2.36 2.36	10	1'-10"	12.26	12	1'-7"	9.31
$F-F_6$	-	12"	10		19.48	10		19.48	10		19.48
G	-	9"	8	3'-1"	16.48	10	3'-1"	20.60	10	3'-1"	20.60
H	-	Shown	2	16'-8"	19.59	2	16'-8"	19.59	2	16'-8"	19.59
Dowels	¾ In.	Shown	6	2'-0"	18.02	6	2'-0"	18.02	6	2'-0"	18.02
Reinf. Steel Lbs			219.85			237.28			225.31		
Class A Conc. CY			2.38			2.54			2.47		

General Notes

All Concrete shall be class "A"
Chamfer as indicated on plans
All dimensions pertaining to Reinforcing Steel are to center of Bars
For details of Manhole Ring and Cover see sheet 21

FOR CONTRACTOR'S INFORMATION ONLY

EXISTING CURB INLET DETAILS

TYPE E2

SHEET 3 OF 3

206C

PROFILE

Culvert Station and/or Creek Name followed by applicable end (Lt, Rt or Both)	Description of Box Culvert No. Spans ~ Span X Height	Max Fill Height (Ft)	Applicable Box Culvert Standard (4)	Applicable Wingwall or End Treatment Standard	Skew Angle (0°,15°, 30° or 45°)	Side Slope or Channel Slope Ratio (SL:1)	T Culvert Top Slab Thickness (In)	U Culvert Wall Thickness (In)	C Estimated Curb Height (Ft)	Hw Height of Wingwall (1) (Ft)	A Curb to End of Wingwall (Ft)	B Offset of End of Wingwall (Ft)	Lw Length of Longest Wingwall (Ft)	Ltw Culvert Toewall Length (Ft)	Atw Anchor Toewall Length (Ft)	Riprap Apron (CY)	Class "C" Conc (Curb) (2) (CY)	Class "C" Conc (Wingwall) (3) (CY)	Total Wingwall Area (SF)
BCC CULVERT #1 (Lt)	3 ~ 9' X 8'	1'	MC-9-10	PW-1	0	2:1	9"	7"	0.896	9.646	N/A	N/A	19.292	29.333	N/A	0.0	1.0	27.2	372
BCC CULVERT #1 (Rt)	3 ~ 9' X 8'	1.6'	MC-9-10	PW-1(MOD)	0	2:1	9"	7"	1.521	10.271	N/A	N/A	20.542	29.333	N/A	0.0	1.7	28.8	422

DISCLAIMER:
The use of this standard is governed by the "Texas Engineering Practice Act". No warranty of any kind is made by TxDOT for any purpose whatsoever. TxDOT assumes no responsibility for the conversion of this standard to other formats or for incorrect results or damages resulting from its use.

DATE: 12/21/2020 1:19:28 PM
FILE: c:\pdworking\khd\pwprod\seth.rutledge\d0101353\bcsstde1-20.dgn

NOTES:
Skew = 0° on SW-0, FW-0, SETB-CD, SETB-SW-0, and SETB-FW-0 standard sheets;
30° maximum for safety end treatment

SL:1 = Horizontal : 1 Vertical
- Side slope at culvert for flared or straight wingwalls.
- Channel slope for parallel wingwalls.
- Slope must be 3:1 or flatter for safety end treatments.

T = Box culvert top slab thickness. Dimension can be found on the applicable box culvert standard sheet.

U = Box culvert wall thickness. Dimension can be found on the applicable box culvert standard sheet.

C = Curb height

See applicable wing or end treatment standard sheets for calculations of Hw, A, B, Lw, Ltw, Atw, and Total Wingwall Area.

Hw = Height of wingwall

A = Distance from face of curb to end of wingwall (not applicable to parallel or straight wingwalls)

B = Offset of end of wingwall (not applicable to parallel or straight wingwalls)

Lw = Length of longest wingwall.

Ltw = Length of culvert toewall (not applicable when using riprap apron)

Atw = Length of anchor toewall (applicable to safety end treatment only)
Total Wingwall Area = Wingwall area in sq. ft. for two wingwalls (one structure end) if Lt or Rt.
Area for four wingwalls (two structure ends) if Both.

(1) Round the wall heights shown to the nearest foot for bidding purposes.

(2) Concrete volume shown is for box culvert curb only. For curbs using the Box Culvert Rail Mounting Details (RAC) standard sheet quantities shown must be increased by a factor of 2.25. If Class S concrete is required for the top slab of the culvert, also provide Class S concrete for the curb. Curb concrete is considered part of the Box Culvert for payment.

(3) Concrete volume shown is total of wings, footings, culvert toewall (if any), anchor toewalls (if any) and wingwall toewalls. Riprap aprons, culverts, and curb quantities are not included.

(4) Regardless of the type of culvert shown on this sheet, the Contractor has the option of furnishing cast-in-place or precast culverts unless otherwise shown elsewhere on the plans. If the Contractor elects to provide culverts of a different type than those shown on this sheet, it is the Contractor's responsibility to make the necessary adjustments to the dimensions and quantities shown.

SPECIAL NOTE TO CONTRACTOR:
THIS SHEET IS A SUPPLEMENT TO THE VARIOUS STANDARD DRAWINGS AND PROVIDES ADDITIONAL ESTIMATED QUANTITIES AND DIMENSIONS FOR THE CONTRACTOR'S INFORMATION, WITH REGARD TO BOX CULVERTS, WINGWALLS, AND SAFETY END TREATMENTS. THE DETAILS, NOTES, AND REQUIREMENTS PROVIDED ON THE APPLICABLE BOX CULVERT, WINGWALL, AND SAFETY END TREATMENT STANDARD DRAWINGS, GOVERN OVER THIS SHEET.

STATE OF TEXAS · SETH T. RUTLEDGE · 129231 · LICENSED · PROFESSIONAL ENGINEER

12/21/2020

Texas Department of Transportation

Bridge Division Standard

BOX CULVERT SUPPLEMENT
WINGS AND END TREATMENTS

BCS

FILE: bcsstde1-20.dgn	DN: TxDOT	CK: TxDOT	DW: TxDOT	CK: TxDOT
©TxDOT February 2020	CONT	SECT	JOB	HIGHWAY
REVISIONS	0055	15	072	US 84
	DIST	COUNTY		SHEET NO.
	WAC	MCLENNAN		207

DISCLAIMER:
The use of this standard is governed by the "Texas Engineering Practice Act". No warranty of any kind is made by TxDOT for any purpose whatsoever. TxDOT assumes no responsibility for the conversion of this standard to other formats or for incorrect results or damages resulting from its use.

DATE: 12/21/2020 1:19:32 PM
FILE: c:\pwworking\khot\pwprod\seth.rutledge\dms81346\racsts02-20(MOD).dgn

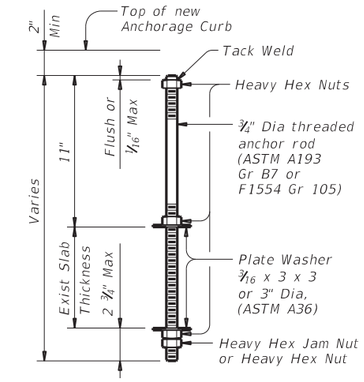

STRAIGHT ANCHOR (9)

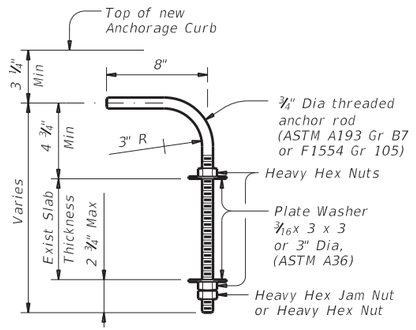

HOOKED ANCHOR (9)

ANCHOR DETAILS

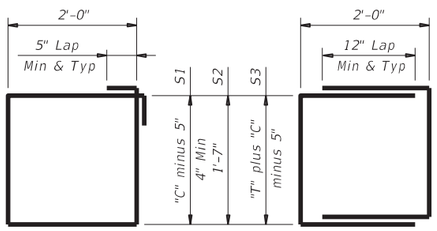

BARS S (#4)

OPTIONAL BARS S (#4)

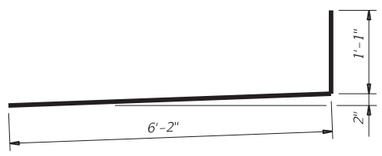

BARS L (#5)

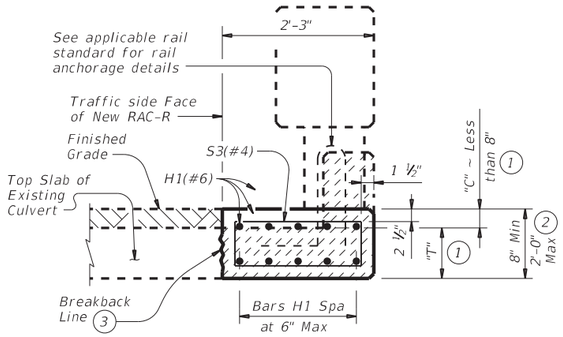

TYPICAL SECTION ~ TYPE 1

Used when the top of the Retrofit Curb is less than 8" above existing slab. Showing T223 Rail other rails similar. (Bars L(#5) on T223 and C223 Rails are not used for this structure). Bars RH(#5) required on standards T80HT, T80SS and T224 are not required when used with the RAC-R standard.

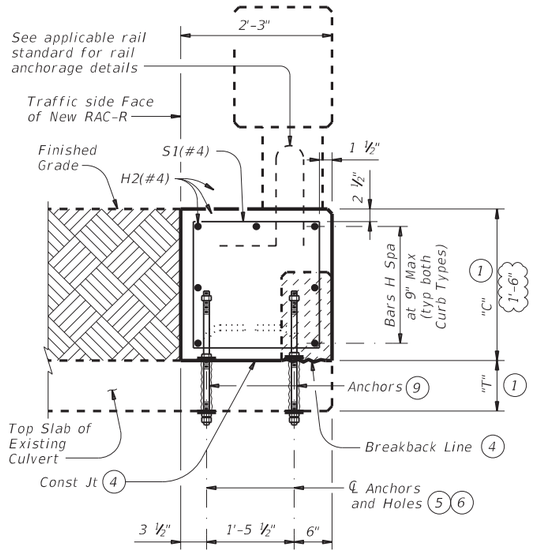

TYPICAL SECTION ~ TYPE 2

Used when the Retrofit Curb is 8" in height or greater. Showing T223 Rail, other rails similar. (Bars L(#5) on T223 and C223 Rails are not used for this structure). Bars RH(#5) required on standards T80HT, T80SS and T224 are not required when used with the RAC-R standard.

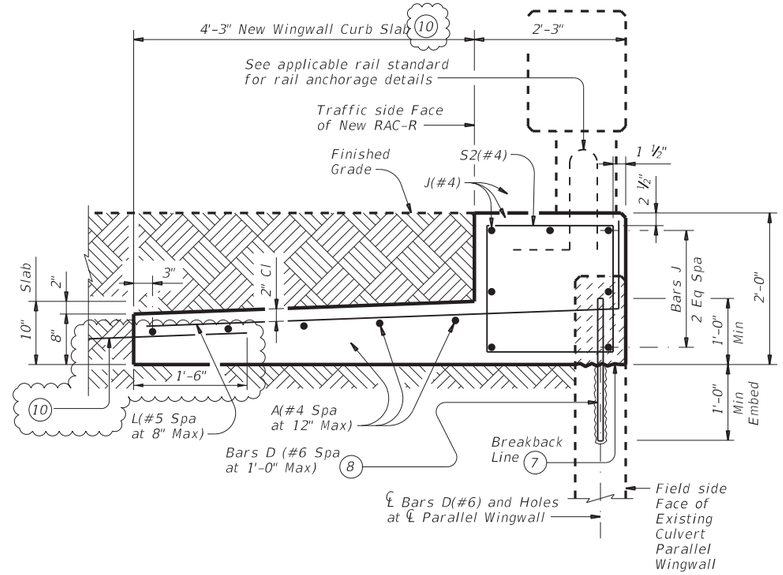

TYPICAL SECTION ~ PARALLEL WINGWALL

Wingwall Anchorage Curb is required on Parallel Wingwalls only. Omit Wingwall Anchorage Curb on Flared and Straight Wingwalls. Showing T223 Rail, other rails similar. (Bars L(#5) on T223 and C223 Rails are not used for this structure). Bars RH(#5) required on standards T80HT, T80SS and T224 are not required when used with RAC-R standard.

(1) *"T" is equal to the existing culvert top slab thickness. If "T" is less than 6", a special design will be required. "C" is equal to the Retrofit Rail Anchorage Curb thickness.*

(2) *The total thickness ("T" plus "C") must be 8" minimum in order to properly install the railing anchorage reinforcing.*

(3) *Remove shaded portion of existing concrete to Breakback Line shown. Care must be taken so as to not damage existing reinforcing. Replace damaged reinforcing with new, like reinforcing. Clean existing reinforcing and incorporate into new concrete construction.*

(4) *Saw cut (score) 1" deep flush with top of existing culvert slab, on the field side face of existing curb, if present. After scoring, remove shaded portion of existing concrete to Breakback Line shown. Do not damage existing reinforcing. Clean, bend and incorporate existing reinforcing into new concrete construction. Note that new anchors, as shown in the detail, are required even when existing reinforcing remains in use. Remove existing overlay and/or base material to flush with top of culvert in areas of new construction. Care must be taken to not damage the existing slab. In order to prevent existing asphalt remnants from acting as a bond breaker between the exposed, existing concrete and the retrofitted concrete curb, clean the newly exposed concrete with abrasive blasting or shot blasting. Remove all loose debris prior to placing new anchorage curb.*

(5) *Core drill 1" diameter holes through existing slab. Percussion drilling is not permitted. Patch spalls, when directed by the Engineer, in accordance with Item 429, "Concrete Structure Repair", at the Contractor's expense. Tighten nuts snug tight.*

(6) *Space field side anchors at 36" maximum. Space traffic side anchors at 11" maximum. Do not align field side and traffic side anchors transversely.*

(7) *Retrofit Wingwall Anchorage Curb must always be 2'-0" in height. Breakback existing wingwall as needed in order to properly align the wingwall Anchorage Curb with that placed on the existing culvert. Saw cut (score) 1" deep on field side face of the existing wingwall prior to breakback. Care must be taken so as to not damage existing reinforcing. Clean and extend existing reinforcing into new construction. Note that new Bars D(#6), as shown in the detail, are required even when existing reinforcing remains in use.*

(8) *Embed bars D(#6) into existing wingwall with a Type III, Class C, D, E, or F anchor adhesive. Minimum adhesive anchor embedment depth is 12". Anchor adhesive chosen must be able to achieve a basic bond strength in tension, Nba, of 26 kips. Submit signed and sealed calculations or the manufacturer's published literature showing the proposed anchor adhesive's ability to develop this load to the Engineer for approval prior to use. Anchor installation, including hole size, drilling, and clean out, must be in accordance with Item 450, "Railing." If existing parallel wingwall thickness is less than 8", a special design will be required.*

(9) *Use straight anchors if retrofit anchorage curb is 1'-2" or greater in thickness. Use hooked anchors for retrofit anchorage curb less than 1'-2" thick.*

This sheet is intended to be used as a guide for retrofitting existing box culverts with traffic railing. Details with appropriate notes taken from this guide should be prepared for the specific application. Dimensions of existing culvert top slab thickness, wingwall thickness, fill height at traffic side face of rail anchorage curb retrofit etc. should be shown. Particular care should be taken in identifying the box culvert wingwall conditions, and providing for proper railing post anchorage and approach guard fence post positioning. This sheet may not be used without modification. The details shown may need to be amended if the exact existing condition is not covered. In all cases details and notes not required must be crossed out or eliminated, "(MOD)" added, the phrase "(Not to be used as a standard)" removed and the sheet sealed and signed.

(10) *Where the required curb slab width of 4'-3" can not be satisfied due to conflict with the existing concrete structure, dowel #8 bars into the concrete structure for 1'-6" long with maximum spacing of 9". If the existing structure has limited horizontal dimension for the dowels to achieve 1'-6" embedment, dowel into the concrete as long as allowed in the direction shown, with 2" minimum end coverage.*

CONSTRUCTION NOTES:

Field verify dimensions before commencing work and ordering materials.

MATERIAL NOTES:

Provide Class "C" concrete (f'c=3,600 psi). Provide Class "C" (HPC) concrete if shown elsewhere in the plans.
Chamfer all exposed corners ¾" unless shown otherwise.
Provide Grade 60 reinforcing steel.
Galvanize all reinforcing steel if required elsewhere.
Provide bar laps, where required, as follows: Uncoated or galvanized ~ #4 = 1'-11"
Galvanize ¾" Dia threaded rods, heavy hex nuts and plate washers, unless otherwise shown on plans.

GENERAL NOTES:

Designed according to AASHTO LRFD Bridge Design Specifications.
The rail anchorage curb details have sufficient strength for use with all standard rail types.
See appropriate rail standard for approved speed restrictions, notes and details not shown.
For vehicle safety, the top of the new curb must be flush with the finished grade.
These details are for use with curbs with a maximum height of 2'-0" only. Curb heights greater than 2'-0" will require special design.
Removal and replacement of backfill, subgrade, and asphalt or concrete pavement necessary for this installation is considered subsidiary to the rail anchorage curb.
Payment for rail anchorage curb (including wingwall curb slab) will be by CY of Class "C" or Class "C" (HPC) concrete.
Not all possible combinations of existing box culverts, curbs, wingwalls etc. have been shown on this sheet. Other combinations and reinforcement arrangements are permissible if they meet the same strength requirements as indicated on this sheet.

Cover dimensions are clear dimensions, unless noted otherwise. Reinforcing bar dimensions shown are out-to-out of bar.

SHEET 1 OF 2

12/21/2020

Texas Department of Transportation — Bridge Division Standard

RAIL ANCHORAGE CURB RETROFIT GUIDE

BOX CULVERT RAIL MOUNTING DETAILS
(CURBS 2'-0" TALL AND LESS ONLY)
(NOT TO BE USED AS A STANDARD)

RAC-R(MOD)

FILE: racsts02-20.dgn	DN: TxDOT	CK: TxDOT	DW: TxDOT	CK: TxDOT
©TxDOT February 2020	CONT	SECT	JOB	HIGHWAY
REVISIONS	0055	15	072	US 84
	DIST	COUNTY		SHEET NO.
	WAC	MCLENNAN		208

DISCLAIMER:
The use of this standard is governed by the "Texas Engineering Practice Act". No warranty of any kind is made by TxDOT for any purpose whatsoever. TxDOT assumes no responsibility for the conversion of this standard to other formats or for incorrect results or damages resulting from its use.

DATE: 12/21/2020 1:19:34 PM
FILE: c:\pworking\kha\pwprod\seth.rutledge\dms81346\racsts02-20(MOD).dgn

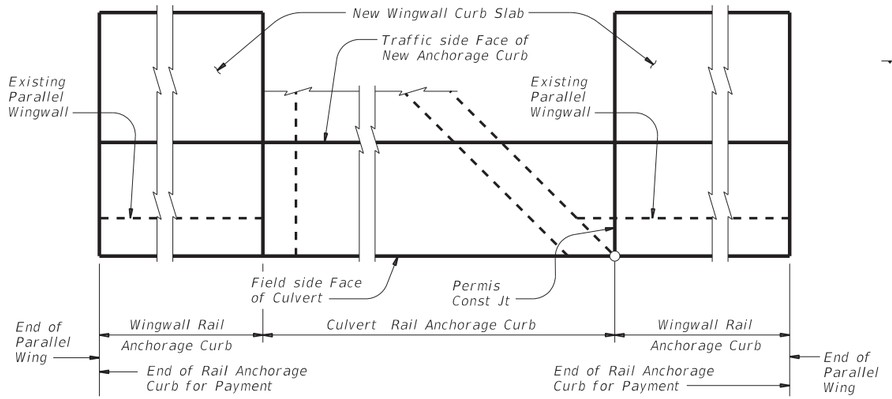

PARALLEL WINGWALL AT 0° SKEW CULVERT

PARALLEL WINGWALL AT SKEWED CULVERT

Note that Wingwall Rail Anchorage Curb is used only at culverts with parallel wingwalls.

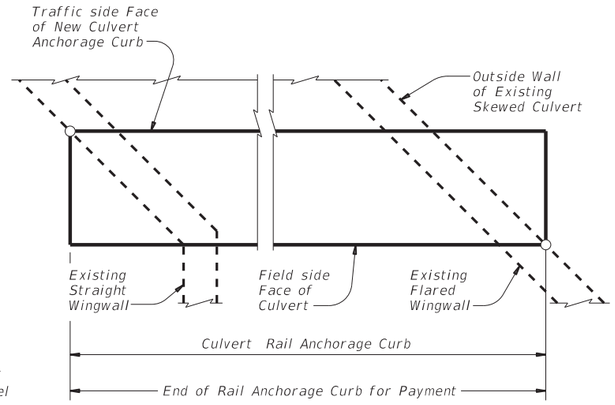

OPTION A ~ STRAIGHT WINGWALL AT SKEWED CULVERT (10)

OPTION A ~ FLARED WINGWALL AT SKEWED CULVERT (10)

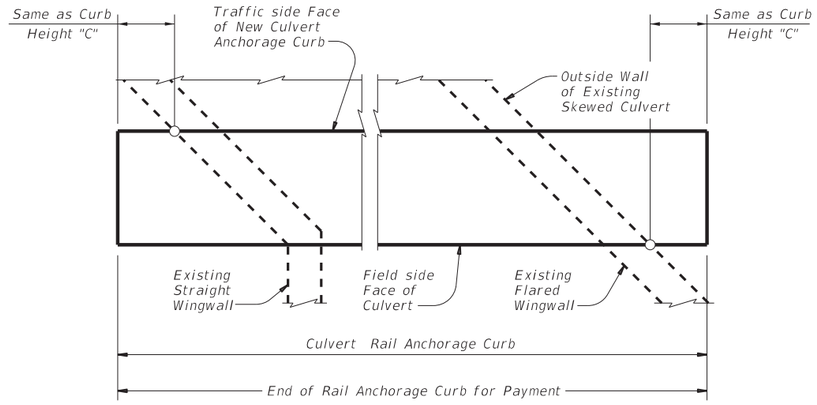

OPTION B ~ STRAIGHT WINGWALL AT SKEWED CULVERT (11)

OPTION B ~ FLARED WINGWALL AT SKEWED CULVERT (11)

TYPICAL CURB PLANS

Showing Geometry only. Reinforcing, Curb Anchors, and Railing not shown for clarity.

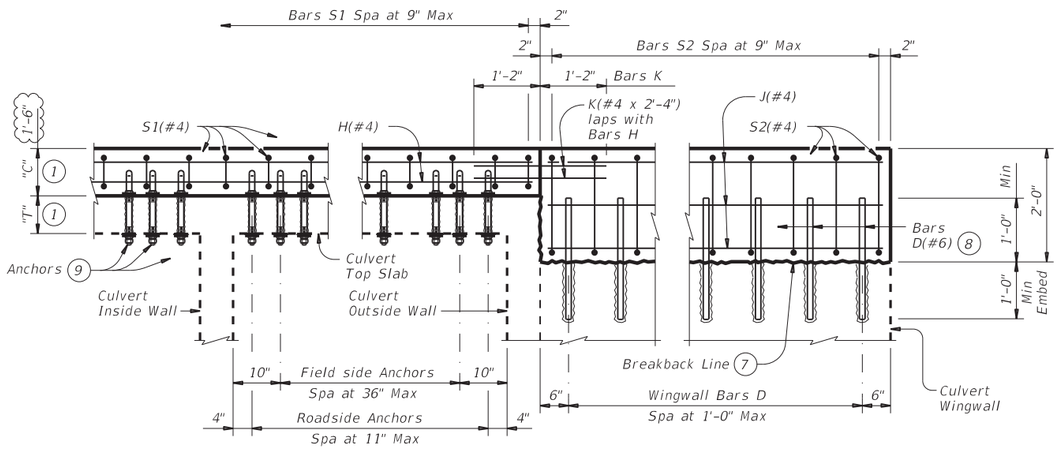

SHOWING CULVERT ANCHORAGE CURB

Showing Anchorage Curb Type 2. Anchor and Bars S spacing are the same for Anchorage Type 1.

SHOWING WINGWALL ANCHORAGE CURB

Curb Slab and Slab reinforcing not shown for clarity.

TYPICAL ELEVATIONS OF INSTALLATION

(1) "T" is equal to the existing culvert top slab thickness. If "T" is less than 6", a special design will be required. "C" is equal to the Retrofit Rail Anchorage Curb thickness.

(7) Retrofit Wingwall Anchorage Curb must always be 2'-0" in height. Breakback existing wingwall as needed in order to properly align the wingwall Anchorage Curb with that placed on the existing culvert. Saw cut (score) 1" deep on field side face of the existing wingwall prior to breakback. Care must be taken so as to not damage existing reinforcing. Clean and extend existing reinforcing into new construction. Note that new Bars D(#6), as shown in the detail, are required even when existing reinforcing remains in use.

(8) Embed bars D(#6) into existing wingwall with a Type III, Class C, D, E, or F anchor adhesive. Minimum adhesive anchor embedment depth is 12". Anchor adhesive chosen must be able to achieve a basic bond strength in tension, Nba, of 26 kips. Submit signed and sealed calculations or the manufacturer's published literature showing the proposed anchor adhesive's ability to develop this load to the Engineer for approval prior to use. Anchor installation, including hole size, drilling, and clean out, must be in accordance with Item 450, "Railing." If existing parallel wingwall thickness is less than 8", a special design will be required.

(9) Use straight anchors if retrofit anchorage curb is 1'-2" or greater in thickness. Use hooked anchors for retrofit anchorage curb less than 1'-2" thick.

(10) Use Option A if finished grade at face of rail anchorage curb remains unchanged, or if both wingwalls and rail anchorage curb will be vertically raised. Existing wingwalls must be checked for suitability of vertically raising.

(11) Use Option B if wingwalls will not be vertically raised when the curb height is increased. Verify adequacy of existing or proposed finished grade between end of rail anchorage curb and wingwall. Extension of rail anchorage curb beyond wingwall may need to be greater than "C" depending on side slope conditions.

Texas Department of Transportation

Bridge Division Standard

RAIL ANCHORAGE CURB RETROFIT GUIDE

BOX CULVERT RAIL MOUNTING DETAILS
(CURBS 2'-0" TALL AND LESS ONLY)
(NOT TO BE USED AS A STANDARD)

RAC-R(MOD)

FILE: racsts02-20.dgn	DN: TxDOT	CK: TxDOT	DW: TxDOT	CK: TxDOT
©TxDOT February 2020	CONT	SECT	JOB	HIGHWAY
REVISIONS	0055	15	072	US 84
	DIST	COUNTY		SHEET NO.
	WAC	MCLENNAN		209

12/21/2020

DISCLAIMER:
The use of this standard is governed by the "Texas Engineering Practice Act". No warranty of any kind is made by TxDOT for any purpose whatsoever. TxDOT assumes no responsibility for the conversion of this standard to other formats or for incorrect results or damages resulting from its use.

DATE: 12/21/2020 1:19:38 PM
FILE: c:\pwworking\khno\pwprod\seth.rutledge\dms81346\pwstde01-20(MOD).dgn

TABLE OF DIMENSIONS AND REINFORCING STEEL
(Wings for one structure end)

Dimensions					Variable Reinforcing				Estimated Quantities per ft of wing (2~wings) (4)	
					Bars J1		Bars J2			
Maximum Wingwall Height Hw	W	X	Y	Z	Size	Spa	Size	Spa	Reinf (Lb/Ft)	Conc (CY/Ft)
9'-6"	6'-0"	2'-10"	2'-2"	9"	#5	6"	#5	6"	156.93	1.136

TABLE OF WINGWALL REINFORCING
(2~wings)

Bar	Size	No.	Spa
D	#6	~	1'-0"
D2	#6	~	1'-0"
E1	#4	~	1'-0"
F	#4	~	1'-0"
G	#6	~	8"
M1	#4	4	~
P	#4	~	1'-0"
V	#4	~	1'-0"

TABLE OF TOEWALL REINFORCING

Bar	Size	No.	Spa
J3	#4	4	
M2	#4	7	~
E2	#4		1'-0"
N1	#4	2	
N2	#4	6	

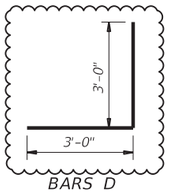

BARS D

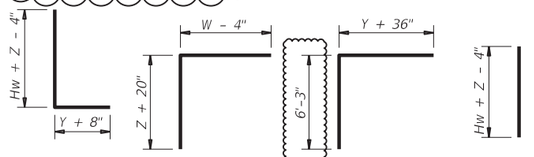

BARS J1 BARS J2 BARS J3 BARS V

WING DIMENSION FORMULAS:
(All values are in feet.)

Hw = H + T + C
Lw = (Hw) (SL) ÷ cosine (θ) for Type PW-1
= (Hw - 1') (SL) ÷ cosine (θ) for Type PW-2 and Hw ≥ 4'
= (Hw - 0.5') (SL) ÷ cosine (θ) for Type PW-2 and Hw < 4'

For cast-in-place culverts:
Ltw = [(N) (S) + (N + 1) (U)] ÷ cosine (θ)

For precast culverts:
Ltw = [(N) (2 U + S) + (N - 1) (0.5')] ÷ cosine (θ)
Total Wingwall Area (two wings ~ SF)
= (2)(Hw)(Lw) for Type PW-1
= (2)(Hw)(Lw) - 6 SF for Type PW-2 and Hw ≥ 4'
= (2)(Hw)(Lw) - 1.5 SF for Type PW-2 and Hw < 4'

Hw = Height of wingwall
Lw = Length of wingwall
Ltw = Culvert toewall length
N = Number of culvert spans
SL:1 = Channel slope ratio. (horizontal: 1 vertical, usual value is 2:1)
θ = Culvert skew

See applicable box culvert standard sheet for S, H, T, and U values.

1. Skew = 0°
2. At discharge end, chamfer may be ¾" minimum.
3. For 15° skew ~ 1"
   For 30° skew ~ 2"
   For 45° skew ~ 3"
4. Quantities shown are for two Type PW-1 wings. Adjust concrete volume for Type PW-2 wings. To determine estimated quantities for two wings, multiply the tabulated values by Lw. Quantities shown do not include weight of Bars D.
5. Provide weepholes for Hw = 5'-0" and greater. Fill around weepholes with coarse gravel.
6. Short walls at Section B-B ends & Perpendicular to toe face.
7. Lap Bars M1 1'-6" minimum with Bars N2.
8. Place Bars G as shown, equally spaced at 8" maximum. Provide at least two pairs of Bars G per wing.
9. 0" Min to 5'-0" Max. Estimated curb heights are shown elsewhere in the plans. For structures with pedestrian rail or curbs taller than 1'-0, refer to the Extended Curb Details (ECD) standard sheet. For structures with T631 or T631LS bridge rail, refer to the Mounting Details for T631 & T631LS Rails (T631-CM) standard sheet. Refer to the Box Culvert Rail Mounting Details (RAC) standard sheet for structures with bridge rail other than T631 or T631LS.
10. For vehicle safety, the following requirements must be met:
    - For structures without bridge rail, construct curbs no more than 3" above finished grade.
    - For structures with bridge rail, construct curbs flush with finished grade.

    Reduce curb heights, if necessary, to meet the above requirements. No changes will be made in quantities and no additional compensation will be allowed for this work.
11. 1'-0" typical. 2'-3" when the Box Culvert Rail Mounting Details (RAC) standard sheet is referred to elswhere in the plans.
12. 3'-0" for Hw < 4'.
13. 6" for Hw < 4'.

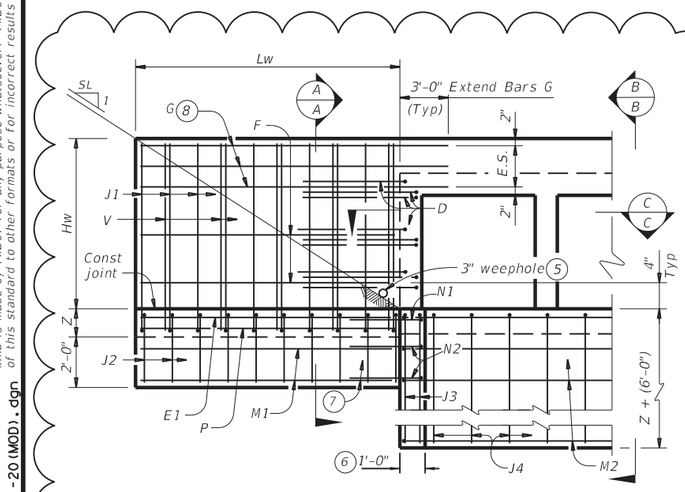

PARTIAL ELEVATION - PW-1

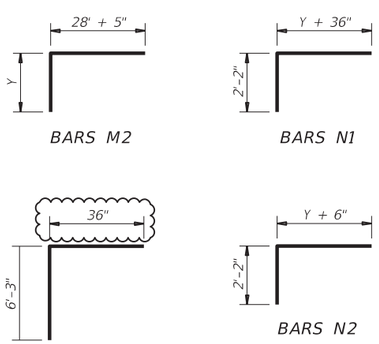

BARS M2 BARS N1 BARS J4 BARS N2

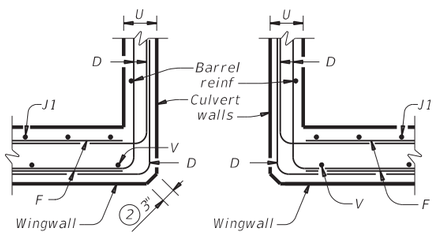

SECTION C-C - PW-1

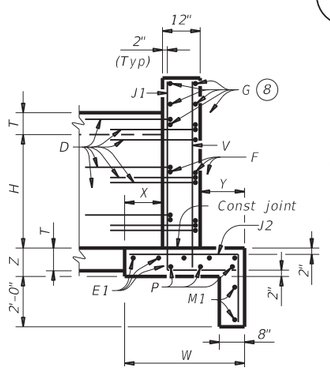

SECTION A-A
(Showing wing reinforcement.)

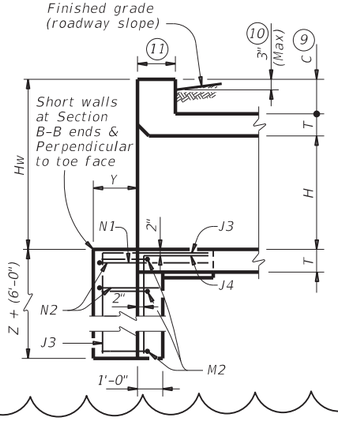

SECTION B-B
(Showing wing reinforcement.)

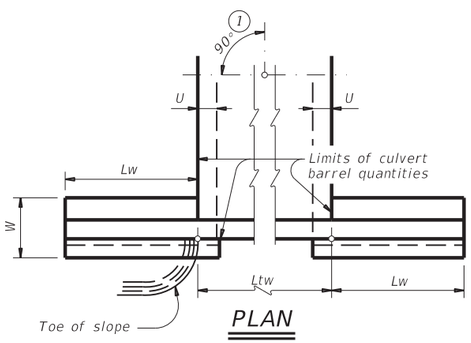

PLAN

DETAILS FOR NON-SKEWED BOX CULVERTS

DESIGNER NOTES:
Type PW-1 can be used for all applications and must be used if railing is to be mounted to the wingwall.
Type PW-2 can only be used for applications without a railing mounted to the wingwall.

MATERIAL NOTES:
Provide Class C concrete (f'c=3,600 psi).
Provide Grade 60 reinforcing steel.
Provide galvanized reinforing steel if required elsewhere in the plans.

GENERAL NOTES:
Designed in accordance with AASHTO LRFD Bridge Design Specifications.
Depth of toewalls for wingwalls and culverts may be reduced or eliminated when founded on solid rock, when directed by the Engineer.
See Box Culvert Supplement (BCS) standard sheet for wingwall type and additional dimensions and information.
Quantities for concrete and reinforcing steel resulting from the formulas given on this sheet are for the Contractor's information only.

Cover dimensions are clear dimensions, unless noted otherwise. Reinforcing dimensions are out-to-out of bars.

12/21/2020

Texas Department of Transportation
Bridge Division Standard

CONCRETE WINGWALLS
WITH PARALLEL WINGS FOR BOX CULVERTS TYPES PW-1 AND PW-2

PW(MOD)

FILE: pwstde01-20.dgn	DN: GAF	CK: CAT	DW: TxDOT	CK: TxDOT
©TxDOT February 2020	CONT	SECT	JOB	HIGHWAY
REVISIONS	0055	15	072	US 84
	DIST	COUNTY		SHEET NO.
	WAC	MCLENNAN		210

DISCLAIMER:
The use of this standard is governed by the "Texas Engineering Practice Act". No warranty of any kind is made by TxDOT for any purpose whatsoever. TxDOT assumes no responsibility for the conversion of this standard to other formats or for incorrect results or damages resulting from its use.

DATE: 12/21/2020 11:20:36 PM
FILE: c:\pwworking\kho\pwprod\seth.rutledge\d0101353\prestd13-20.dgn

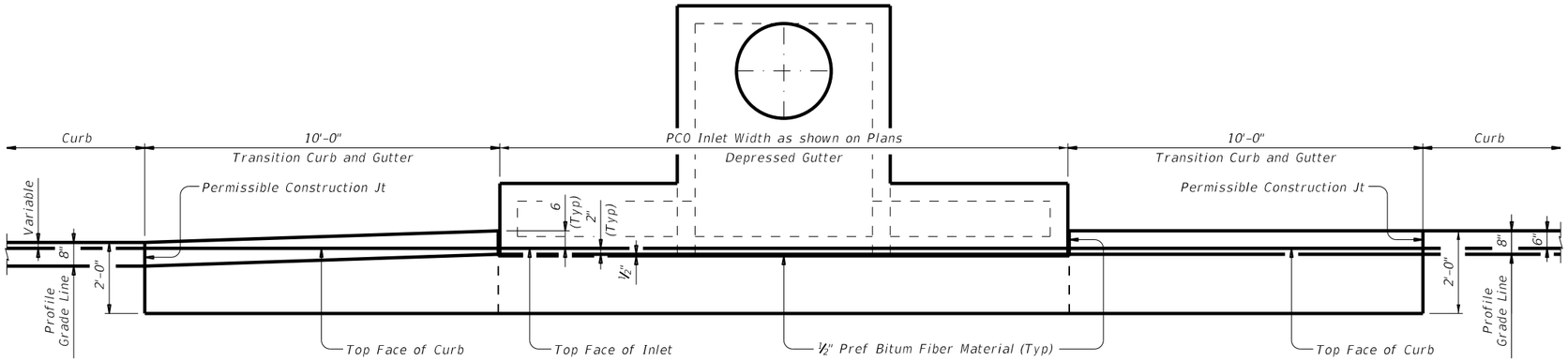

SHOWING TYPE I, IIa & III Curb and Gutter

PLAN

SHOWING TYPE II & IV Curb and Gutter

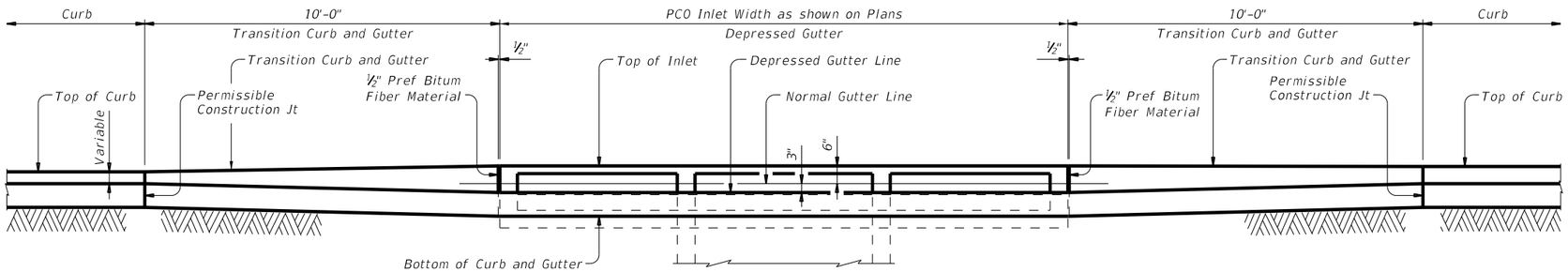

SHOWING TYPE I, IIa & III Curb and Gutter

ELEVATION

SHOWING TYPE II & IV Curb and Gutter

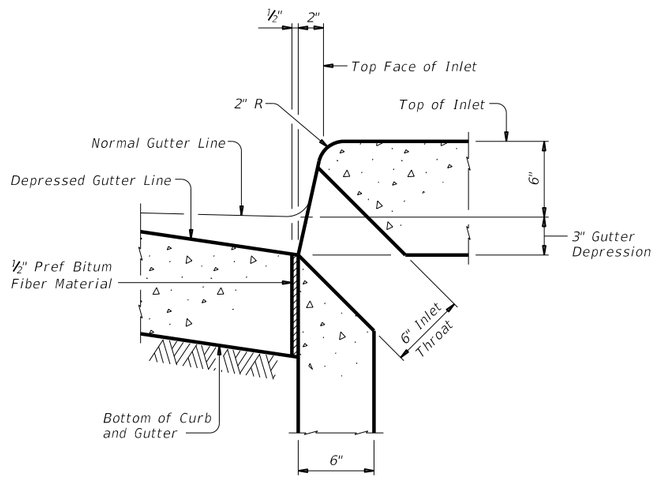

SECTION AT GUTTER AND INLET

Reinforcing steel not shown for clarity.

CONSTRUCTION NOTES:
Align top face of curb with PCO Inlet as shown.

MATERIAL NOTES:
Provide ½" Preformed Bituminous Fiber Material.

GENERAL NOTES:
See Precast Curb Inlet Outside Roadway (PCO) standard for details and notes not shown.
See Concrete Curb and Curb and Gutter (CCCG-12) standard for details and notes not shown.
Curb and Gutter Transitions is paid for and in accordance with Item 529, "Concrete Curb, Gutter, and Combined Curb and Gutter."
Preformed Bituminous Fiber Material is subsidiary to PCO Inlet.

Texas Department of Transportation

Bridge Division Standard

CURB AND GUTTER TRANSITION DETAILS FOR PCO INLET

CGT-PCO

FILE: prestd13-20.dgn	DN: TxDOT	CK: AES	DW: JTR	CK: AES
©TxDOT February 2020	CONT	SECT	JOB	HIGHWAY
REVISIONS	0055	15	072	US 84
	DIST	COUNTY		SHEET NO.
	WAC	MCLENNAN		210A

DISCLAIMER:
The use of this standard is governed by the "Texas Engineering Practice Act". No warranty of any kind is made by TxDOT for any purpose whatsoever. TxDOT assumes no responsibility for the conversion of this standard to other formats or for incorrect results or damages resulting from its use.

DATE: 12/21/2020 11:20:40 PM
FILE: c:\pworking\khd\pwprod\seth.rutledge\d0101353\crrstde1-19.dgn

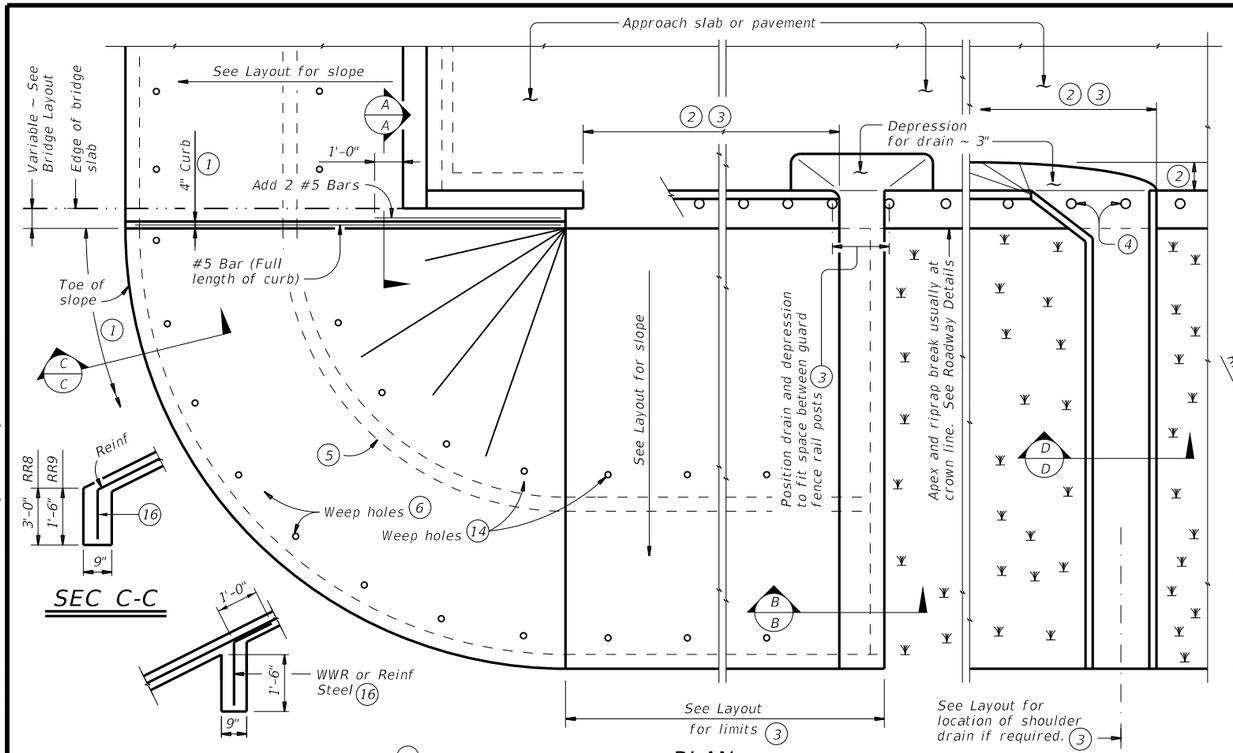

PLAN

SEC C-C

INTERMEDIATE TOEWALL (5)

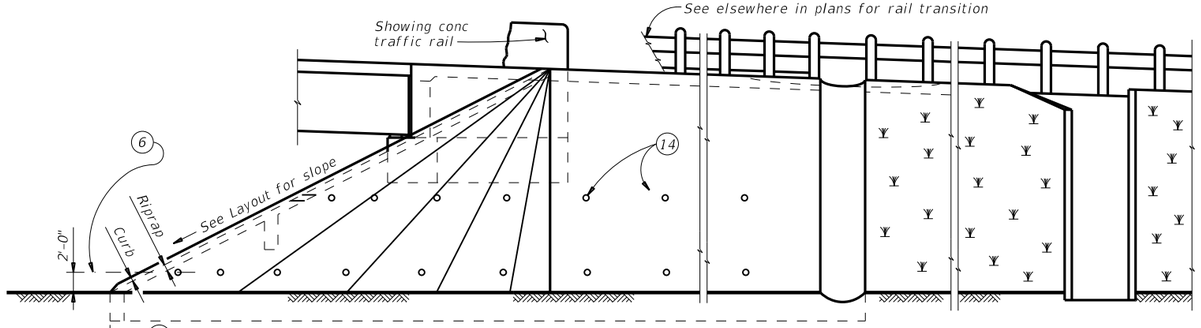

ELEVATION

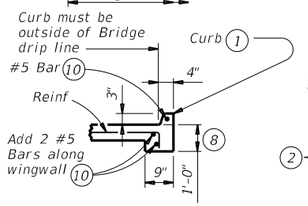

SEC A-A

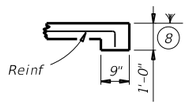

SEC B-B

(No drain)

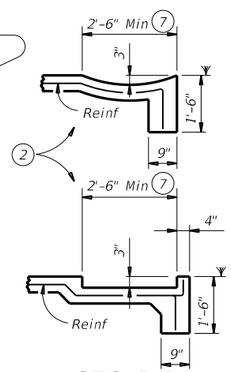

SEC B-B

(Shoulder drain integral with riprap)

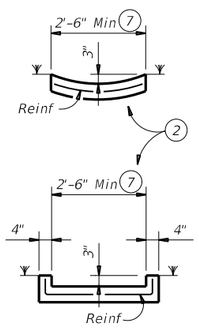

SEC D-D

(Shoulder drain)

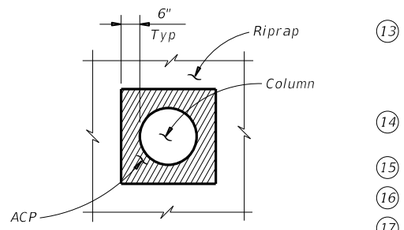

Riprap blockout to be filled with ACP. (Subsidiary to riprap)

RIPRAP DETAIL AT COLUMNS

(As directed by the Engineer)

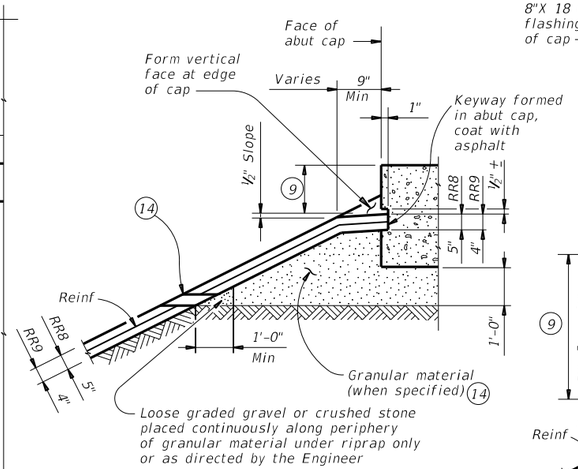

SHOWING KEYWAY OPTION

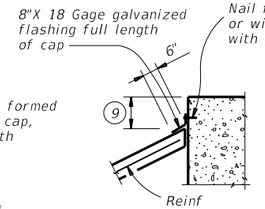

CAP OPTION A

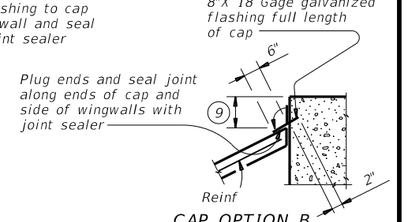

CAP OPTION B

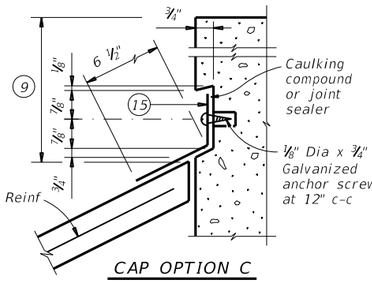

CAP OPTION C

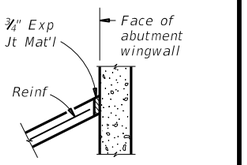

SECT THRU RIPRAP AT WINGWALL (12)

SECTIONS THRU RIPRAP AT CAP (11)

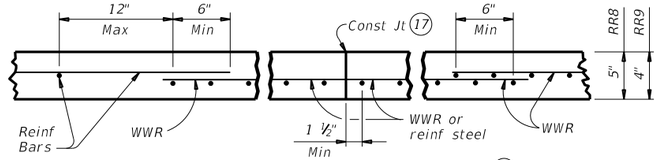

REINFORCEMENT DETAILS (13)

See General Notes for optional synthetic fiber reinforcement.

(1) When riprap is shown extended around header on layout, extend slab and toewall as shown and eliminate 4" curb.

(2) Limits and configuration of drains and depressions are as shown elsewhere in plans or as directed by the Engineer.

(3) Location of shoulder drain must consider limitations imposed by rail transition. Do not locate shoulder drains at expansion joints between approach slab and concrete pavement.

(4) See details elsewhere in plans for installation of guard fence posts through concrete riprap.

(5) Provide intermediate toewall only when designated elsewhere in the plans or included in the specifications.

(6) Provide lower level of 2" Dia weep holes at 10' c-c backed by 1 CF packet of gravel and galvanized hardware cloth at all locations unless directed by the Engineer to eliminate.

(7) Use wider or other drain configurations if shown elsewhere in plans or if directed by the Engineer.

(8) Wall extension may be reduced or modified if approved by the Engineer. Increase wall extension to 1'-6" whenever the optional intermediate toewall is called for in the plans.

(9) Top of cap to top of riprap dimension varies as directed by the Engineer. Should be 9" Min for beam/slab type bridges and 1'-6" for slab span, box beam, or slab beam bridges.

(10) #5 bars shown are required even when synthetic fiber reinforcing option is selected.

(11) Provide sealing option for joint between the face of cap and riprap as designated by the Engineer or as shown elsewhere on plans.

(12) Flashing (shown in Cap Option A) may be used at wingwall in addition to Exp Jt Mat'l if shown on plans or directed by the Engineer.

(13) Provide #3 reinforcing bars at 18" Spa c-c. Provide Welded Wire Reinforcement (WWR) as 6x6-D2.9xD2.9 or D3xD3. Combinations of WWR and reinforcing bars may be used if both are permitted. Use lap splices of a minimum 6 inches, measured from the transverse wire of WWR, and the ends of reinforcing bars.

(14) If granular material is specified, provide upper level of 2" Dia weep holes at 10' c-c backed by galvanized hardware cloth.

(15) 8" x 18 Gage Galv Sheet Metal

(16) Provide WWR or #3 bars, with 1'-0" extension into slope.

(17) WWR or reinforcing steel is continuous through riprap construction joints. Provide WWR or reinforcing steel that extends 1'-1" minimum into adjacent riprap on each side of construction joint even if synthetic reinforcing fiber is utilized.

FOR CONTRACTOR'S INFORMATION ONLY:
5" of RR8 = 0.015 CY/SF
4" of RR9 = 0.012 CY/SF
#3 Reinf at 18" c-c = 0.501 Lbs/SF
6x6-D3xD3 = 0.408 Lbs/SF

GENERAL NOTES:

Provide Class "B" concrete (f'c = 2,000 psi) unless noted elsewhere in plans.

Provide Grade 60 reinforcing steel.

Provide deformed welded wire reinforcement (WWR) meeting ASTM A1064, unless otherwise shown.

Provide reinforcing bars, deformed WWR, or any suitable combination of both types for riprap reinforcing, unless specified elsewhere in the plans.

Optionally synthetic fibers may be used if approved by the Engineer. Provide synthetic fibers listed on the "Fibers for Concrete" Material Producer List (MPL) in lieu of steel reinforcing in riprap concrete.

Install construction joints or grooved joints extending the full slant slope height at intervals of approximately 20 feet unless otherwise directed by the Engineer.

Hardware cloth, loose grade stone behind weep holes, flashing, or other sealing material are subsidiary to the bid item "Riprap".

See Layout for limits of riprap.

RR8 is to be used on stream crossings.

RR9 is to be used on other embankments.

Texas Department of Transportation

Bridge Division Standard

CONCRETE RIPRAP AND SHOULDER DRAINS
EMBANKMENTS AT BRIDGE ENDS (TYPES RR8 & RR9)

CRR

FILE: crrstde1-19.dgn	DN: TxDOT	CK: TxDOT	DW: TxDOT	CK: TxDOT
©TxDOT April 2019	CONT	SECT	JOB	HIGHWAY
REVISIONS	0055	15	072	US 84
	DIST	COUNTY		SHEET NO.
	WAC	MCLENNAN		211

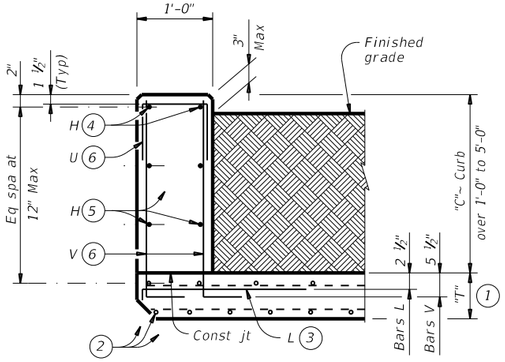

TYPICAL SECTION

Used for curbs over 1'–0" to 5'–0"

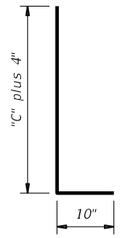

BARS V (#5) (6)

Spaced at 12" Max

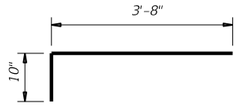

BARS L (#5) (3)

Spaced at 12" Max

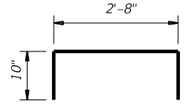

OPTIONAL BARS L (#5) (3) (7)

Spaced at 12" Max

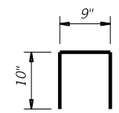

BARS U (#4) (6)

Spaced at 12" Max

(1) "T" is equal to the culvert top slab thickness. For precast boxes with slabs less than 8" thick, see SCP-MD standard for additional details.

(2) Adjust normal culvert slab bars as necessary to clear obstructions.

(3) Place bars L as shown. Tilt hook as necessary to maintain cover.

(4) Place normal culvert curb bars H(#4) as shown. Adjust as necessary to clear obstructions.

(5) Additional bars H(#4) as required to maintain 12" Max spacing.

(6) Replace normal culvert curb bars K with one bar U and two bars V as shown spaced at 12" Max. Adjust length of bars V as necessary to maintain clear cover.

(7) Optional bars L are to be used only for precast box culverts with 3'–0" closure pour.

(8) Quantities shown are for Contractor's information only. Quantities are per linear foot of curb length. The value in table can be interpolated for intermediate values of curb height, "C". Quantity includes bars K (when applicable).

TABLE OF ESTIMATED CURB QUANTITIES (8)

Curb Height "C"	Conc (CY/LF)	Reinf Steel (Lb/LF)
1'–0"	0.037	10.4
1'–6"	0.056	14.5
2'–0"	0.074	15.6
2'–6"	0.093	18.0
3'–0"	0.111	19.0
3'–6"	0.130	21.3
4'–0"	0.148	22.4
4'–6"	0.167	24.8
5'–0"	0.185	25.9

CONSTRUCTION NOTES:

Adjust reinforcing steel as necessary to provide 1 ¼" cover.

For vehicle safety, top of the curb must not project more than 3" above the finished grade.

MATERIAL NOTES:

Provide Grade 60 reinforcing steel.

Provide galvanized reinforcing steel if required elsewhere in the plans.

Provide Class "C" concrete (f'_c = 3,600 psi) minimum for curbs.

Provide bar laps, where required, as follows:

- Uncoated or galvanized ~ #4 = 1'–8" Min

GENERAL NOTES:

Designed according to AASHTO LRFD Bridge Design Specifications.

These extended curb details have sufficient strength to allow for future retrofit of Type T631 or T631LS railing. These details are suitable for use with PR11, PR22 and PR3 type rails. These details are not suitable for the mounting of other rail types. For new construction using T631 or T631LS railing, use the T631-CM standard.

This Curb is considered as part of the Box Culvert for payment.

Cover dimensions are clear dimensions, unless noted otherwise.

Reinforcing bar dimensions shown are out-to-out of bar.

Texas Department of Transportation

Bridge Division Standard

EXTENDED CURB DETAILS

FOR BOX CULVERTS WITH CURBS OVER 1'-0" TO 5'-0" TALL

ECD

FILE: ecdstde1-20.dgn	DN: GAF	CK: TxDOT	DW: TxDOT	CK: GAF
©TxDOT February 2020	CONT	SECT	JOB	HIGHWAY
REVISIONS	0055	15	072	US 84
	DIST	COUNTY		SHEET NO.
	WAC	MCLENNAN		212

DISCLAIMER:
The use of this standard is governed by the "Texas Engineering Practice Act". No warranty of any kind is made by TxDOT for any purpose whatsoever. TxDOT assumes no responsibility for the conversion of this standard to other formats or for incorrect results or damages resulting from its use.

DATE: 12/21/2020 11:20:44 PM
FILE: c:\pworking\khq\pwprod\seth.rutledge\d0101353\ecdstde1-20.dgn

DISCLAIMER:
The use of this standard is governed by the "Texas Engineering Practice Act". No warranty of any kind is made by TxDOT for any purpose whatsoever. TxDOT assumes no responsibility for the conversion of this standard to other formats or for incorrect results or damages resulting from its use.

DATE: 12/21/2020 11:20:48 PM
FILE: c:\pwworking\khd\pwprod\seth.rutledge\d0101353\mc910ste-20.dgn

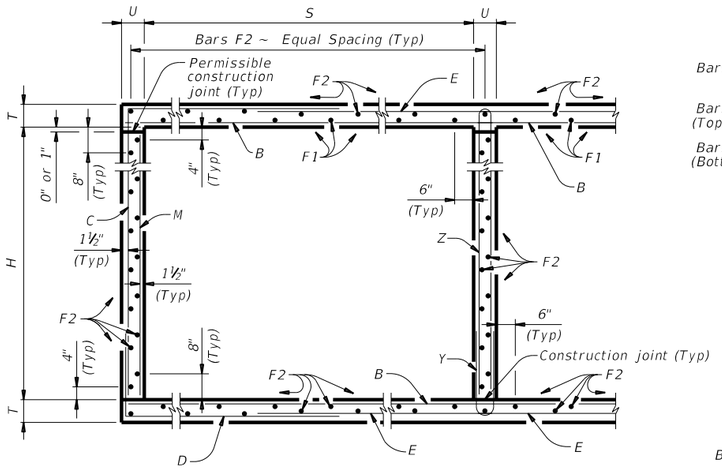

TYPICAL SECTION

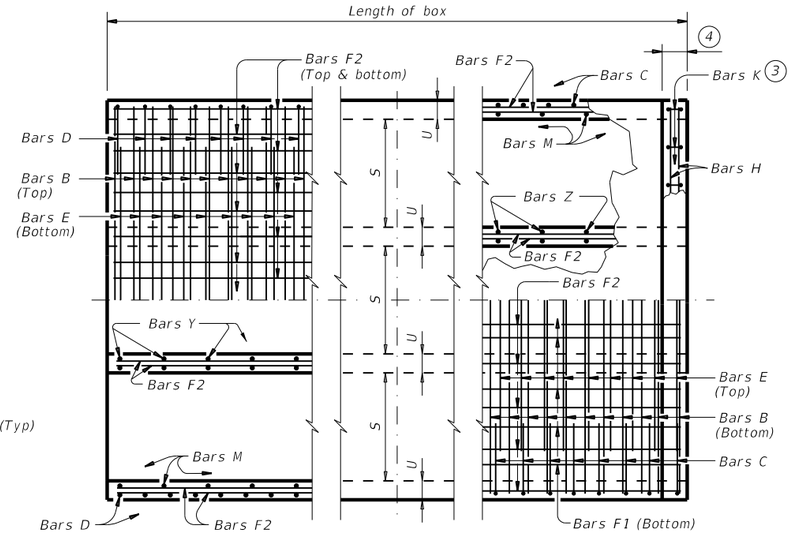

BOTTOM SLAB TOP SLAB

PART PLANS

1. 0" Min to 5'-0" Max. Estimated curb heights are shown elsewhere in the plans. For structures with pedestrian rail or curbs taller than 1'-0", refer to the Extended Curb Details (ECD) standard sheet. For structures with T631 or T631LS bridge rail, refer to the Mounting Details for T631 & T631LS Rails (T631-CM) standard sheet. Refer to the Rail Anchorage Curb (RAC) standard sheet for structures with bridge rail other than T631 or T631LS.

2. For vehicle safety, the following requirements must be met:
   - For structures without bridge rail, construct curbs no more than 3" above finished grade.
   - For structures with bridge rail, construct curbs flush with finished grade.

   Reduce curb heights, if necessary, to meet the above requirements. No changes will be made in quantities and no additional compensation will be allowed for this work.

3. For curbs less than 1'-0" high, tilt Bars K or reduce bar height as necessary to maintain cover. For curbs less than 3" high, Bars K may be omitted.

4. 1'-0" typical. 2'-3" when the Rail Anchorage Curb (RAC) standard sheet is referred to elsewhere in the plans.

The Contractor may replace Bars B, C, D, E, F1, F2, M, Y, and/or Z with deformed welded wire reinforcement (WWR) meeting the requirements of ASTM A1064. The area of required reinforcement may be reduced by the ratio of 60 ksi / 70 ksi. Spacing of WWR is limited to 4" Min and 18" Max. When required, provide lap splices in the WWR of the same length required for the equivalent bar size, rounded up for wire sizes between conventional bar sizes. The lap length required for WWR is never less than the lap length required for uncoated #4 bars.

Example conversion: Replacing No. 6 Gr 60 at 6" Spacing with WWR
Required WWR = (0.44 sq. in. per 0.5 ft.) x (60 ksi / 70 ksi) = 0.755 sq. in. per ft.
If D30.6 wire is used to meet the 0.755 sq. in. per ft. requirement in this example, the required spacing = (0.306 sq. in.) / (0.755 sq. in. per ft.) x (12 in. per ft.) = 4.86" Max spacing. Required lap length for the provided D30.6 wire is 2'-1" (the same minimum lap length required for uncoated #5 bars, as listed under MATERIAL NOTES).

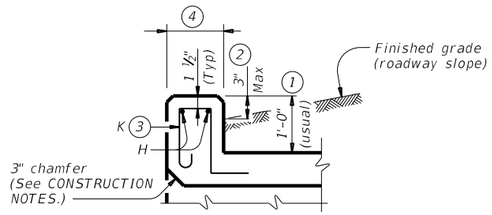

SECTION THRU CURB

TABLE OF BAR DIMENSIONS		
H	"X"	"Y"
4'-0"	4'-7 ½"	5'-5"
5'-0"	5'-7 ½"	5'-5"
6'-0"	6'-7 ½"	5'-5"
7'-0"	7'-7 ½"	5'-5"
8'-0"	8'-7 ½"	5'-5"
9'-0"	9'-7 ½"	5'-5"

CONSTRUCTION NOTES:
Do not use permanent forms.
Chamfer the bottom edge of the top slab 3" at the entrance.
Optionally, raise construction joints shown at the flow line by a maximum of 6". If this option is taken, Bars M may be cut off or raised, Bars C and D may be reversed, and Bars Y and Z may be reversed.

MATERIAL NOTES:
Provide Grade 60 reinforcing steel.
Provide galvanized reinforcing steel if required elsewhere in the plans.
Provide Class C concrete (f'c = 3,600 psi) for culvert barrel and curb, with the following exceptions: provide Class S concrete (f'c = 4,000 psi) for top slabs of:
- culverts with overlay,
- culverts with 1-to-2 course surface treatment, or
- culverts with the top slab as the final riding surface.

Provide bar laps, where required, as follows:
- Uncoated or galvanized ~ #4 = 1'-8" Min
- Uncoated or galvanized ~ #5 = 2'-1" Min
- Uncoated or galvanized ~ #6 = 2'-6" Min

GENERAL NOTES:
Designed according to AASHTO LRFD Bridge Design Specifications for the range of fill heights shown.
See the Multiple Box Culverts Cast-In-Place Miscellaneous Detail (MC-MD) standard sheet for details pertaining to skewed ends, angle sections, and lengthening.

Cover dimensions are clear dimensions, unless noted otherwise.
Reinforcing bar dimensions shown are out-to-out of bar.

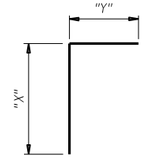

BARS C

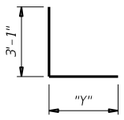

BARS D

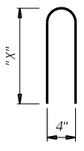

BARS Z

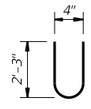

BARS Y

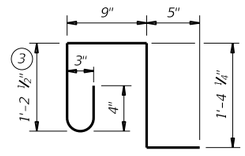

BARS K (#4)
(Spa = 1'-0" Max)
(Length = 4'-2")

HL93 LOADING SHEET 1 OF 2

Texas Department of Transportation | Bridge Division Standard

MULTIPLE BOX CULVERTS CAST-IN-PLACE
9'-0" SPAN
0' TO 10' FILL

MC-9-10

FILE: mc910ste-20.dgn	DN: TBE	CK: BMP	DW: TxDOT	CK: TxDOT
©TxDOT February 2020	CONT	SECT	JOB	HIGHWAY
REVISIONS	0055	15	072	US 84
	DIST	COUNTY		SHEET NO.
	WAC	MCLENNAN		213

NUMBER OF SPANS	SECTION DIMENSIONS				BILLS OF REINFORCING STEEL (For Box Length = 40 feet)																																QUANTITIES					
					Bars B					Bars C & D							Bars E					Bars F1 ~ #4				Bars F2 ~ #4				Bars M ~ #4				Bars Y & Z ~ #4								Bars H 4 ~ #4		Bars K		Per Foot of Barrel		Curb		Total	
	S	H	T	U	No.	Size	Spa	Length	Wt	No.	Size	Spa	Bars C Length	Bars C Wt	Bars D Length	Bars D Wt	No.	Size	Spa	Length	Wt	No.	Spa	Length	Wt	No.	Spa	Length	Wt	No.	Spa	Length	Wt	No.	Spa	Bars Y Length	Bars Y Wt	Bars Z Length	Bars Z Wt	Length	Wt	No.	Wt	Conc (CY)	Renf (Lb)	Conc (CY)	Renf (Lb)	Conc (CY)	Renf (Lb)
2	9' – 0"	4' – 0"	9"	7"	162	#6	6"	19' – 6"	4,745	108	#6	9"	10' – 1"	1,636	8' – 7"	1,392	162	#6	6"	14' – 1"	3,427	14	18"	39' – 9"	372	62	18"	39' – 9"	1,646	108	9"	4' – 0"	289	54	9"	4' – 9"	171	9' – 5"	340	19' – 6"	52	42	117	1.356	350.5	1.5	169	55.7	14,187
3	9' – 0"	4' – 0"	9"	7"	162	#6	6"	29' – 1"	7,077	108	#6	9"	10' – 1"	1,636	8' – 7"	1,392	162	#6	6"	23' – 8"	5,759	21	18"	39' – 9"	558	89	18"	39' – 9"	2,363	108	9"	4' – 0"	289	108	9"	4' – 9"	343	9' – 5"	679	29' – 1"	78	62	173	1.975	502.4	2.2	251	81.2	20,347
4	9' – 0"	4' – 0"	9"	7"	162	#6	6"	38' – 8"	9,409	108	#6	9"	10' – 1"	1,636	8' – 7"	1,392	162	#6	6"	33' – 3"	8,091	28	18"	39' – 9"	743	116	18"	39' – 9"	3,080	108	9"	4' – 0"	289	162	9"	4' – 9"	514	9' – 5"	1,019	38' – 8"	103	80	223	2.594	654.3	2.9	326	106.6	26,499
5	9' – 0"	4' – 0"	9"	7"	162	#6	6"	48' – 3"	11,740	108	#6	9"	10' – 1"	1,636	8' – 7"	1,392	162	#6	6"	42' – 10"	10,422	35	18"	39' – 9"	929	143	18"	39' – 9"	3,797	108	9"	4' – 0"	289	216	9"	4' – 9"	685	9' – 5"	1,359	48' – 3"	129	100	278	3.213	806.2	3.6	407	132.1	32,656
6	9' – 0"	4' – 0"	9"	7"	162	#6	6"	57' – 10"	14,072	108	#6	9"	10' – 1"	1,636	8' – 7"	1,392	162	#6	6"	52' – 5"	12,754	42	18"	39' – 9"	1,115	170	18"	39' – 9"	4,514	108	9"	4' – 0"	289	270	9"	4' – 9"	857	9' – 5"	1,698	57' – 10"	155	118	328	3.832	958.2	4.3	483	157.6	38,810
2	9' – 0"	5' – 0"	9"	7"	162	#6	6"	19' – 6"	4,745	108	#6	9"	11' – 1"	1,798	8' – 7"	1,392	162	#6	6"	14' – 1"	3,427	14	18"	39' – 9"	372	68	18"	39' – 9"	1,806	108	9"	5' – 0"	361	54	9"	4' – 9"	171	11' – 5"	412	19' – 6"	52	42	117	1.421	362.1	1.5	169	58.3	14,653
3	9' – 0"	5' – 0"	9"	7"	162	#6	6"	29' – 1"	7,077	108	#6	9"	11' – 1"	1,798	8' – 7"	1,392	162	#6	6"	23' – 8"	5,759	21	18"	39' – 9"	558	97	18"	39' – 9"	2,576	108	9"	5' – 0"	361	108	9"	4' – 9"	343	11' – 5"	824	29' – 1"	78	62	173	2.062	517.2	2.2	251	84.6	20,939
4	9' – 0"	5' – 0"	9"	7"	162	#6	6"	38' – 8"	9,409	108	#6	9"	11' – 1"	1,798	8' – 7"	1,392	162	#6	6"	33' – 3"	8,091	28	18"	39' – 9"	743	126	18"	39' – 9"	3,346	108	9"	5' – 0"	361	162	9"	4' – 9"	514	11' – 5"	1,235	38' – 8"	103	80	223	2.702	672.2	2.9	326	111.0	27,215
5	9' – 0"	5' – 0"	9"	7"	162	#6	6"	48' – 3"	11,740	108	#6	9"	11' – 1"	1,798	8' – 7"	1,392	162	#6	6"	42' – 10"	10,422	35	18"	39' – 9"	929	155	18"	39' – 9"	4,116	108	9"	5' – 0"	361	216	9"	4' – 9"	685	11' – 5"	1,647	48' – 3"	129	100	278	3.343	827.3	3.6	407	137.3	33,497
6	9' – 0"	5' – 0"	9"	7"	162	#6	6"	57' – 10"	14,072	108	#6	9"	11' – 1"	1,798	8' – 7"	1,392	162	#6	6"	52' – 5"	12,754	42	18"	39' – 9"	1,115	184	18"	39' – 9"	4,886	108	9"	5' – 0"	361	270	9"	4' – 9"	857	11' – 5"	2,059	57' – 10"	155	118	328	3.983	982.4	4.3	483	163.6	39,777
2	9' – 0"	6' – 0"	9"	7"	162	#6	6"	19' – 6"	4,745	108	#6	9"	12' – 1"	1,960	8' – 7"	1,392	162	#6	6"	14' – 1"	3,427	14	18"	39' – 9"	372	74	18"	39' – 9"	1,965	108	9"	6' – 0"	433	54	9"	4' – 9"	171	13' – 5"	484	19' – 6"	52	42	117	1.486	373.7	1.5	169	60.9	15,118
3	9' – 0"	6' – 0"	9"	7"	162	#6	6"	29' – 1"	7,077	108	#6	9"	12' – 1"	1,960	8' – 7"	1,392	162	#6	6"	23' – 8"	5,759	21	18"	39' – 9"	558	105	18"	39' – 9"	2,788	108	9"	6' – 0"	433	108	9"	4' – 9"	343	13' – 5"	968	29' – 1"	78	62	173	2.148	532.0	2.2	251	88.1	21,529
4	9' – 0"	6' – 0"	9"	7"	162	#6	6"	38' – 8"	9,409	108	#6	9"	12' – 1"	1,960	8' – 7"	1,392	162	#6	6"	33' – 3"	8,091	28	18"	39' – 9"	743	136	18"	39' – 9"	3,611	108	9"	6' – 0"	433	162	9"	4' – 9"	514	13' – 5"	1,452	38' – 8"	103	80	223	2.810	690.1	2.9	326	115.3	27,931
5	9' – 0"	6' – 0"	9"	7"	162	#6	6"	48' – 3"	11,740	108	#6	9"	12' – 1"	1,960	8' – 7"	1,392	162	#6	6"	42' – 10"	10,422	35	18"	39' – 9"	929	167	18"	39' – 9"	4,434	108	9"	6' – 0"	433	216	9"	4' – 9"	685	13' – 5"	1,936	48' – 3"	129	100	278	3.472	848.3	3.6	407	142.5	34,338
6	9' – 0"	6' – 0"	9"	7"	162	#6	6"	57' – 10"	14,072	108	#6	9"	12' – 1"	1,960	8' – 7"	1,392	162	#6	6"	52' – 5"	12,754	42	18"	39' – 9"	1,115	198	18"	39' – 9"	5,257	108	9"	6' – 0"	433	270	9"	4' – 9"	857	13' – 5"	2,420	57' – 10"	155	118	328	4.134	1,006.5	4.3	483	169.6	40,743
2	9' – 0"	7' – 0"	9"	7"	162	#6	6"	19' – 6"	4,745	108	#6	9"	13' – 1"	2,122	8' – 7"	1,392	162	#6	6"	14' – 1"	3,427	14	18"	39' – 9"	372	74	18"	39' – 9"	1,965	108	9"	7' – 0"	505	54	9"	4' – 9"	171	15' – 5"	556	19' – 6"	52	42	117	1.551	381.4	1.5	169	63.5	15,424
3	9' – 0"	7' – 0"	9"	7"	162	#6	6"	29' – 1"	7,077	108	#6	9"	13' – 1"	2,122	8' – 7"	1,392	162	#6	6"	23' – 8"	5,759	21	18"	39' – 9"	558	105	18"	39' – 9"	2,788	108	9"	7' – 0"	505	108	9"	4' – 9"	343	15' – 5"	1,112	29' – 1"	78	62	173	2.235	541.4	2.2	251	91.6	21,907
4	9' – 0"	7' – 0"	9"	7"	162	#6	6"	38' – 8"	9,409	108	#6	9"	13' – 1"	2,122	8' – 7"	1,392	162	#6	6"	33' – 3"	8,091	28	18"	39' – 9"	743	136	18"	39' – 9"	3,611	108	9"	7' – 0"	505	162	9"	4' – 9"	514	15' – 5"	1,668	38' – 8"	103	80	223	2.918	701.4	2.9	326	119.6	28,381
5	9' – 0"	7' – 0"	9"	7"	162	#6	6"	48' – 3"	11,740	108	#6	9"	13' – 1"	2,122	8' – 7"	1,392	162	#6	6"	42' – 10"	10,422	35	18"	39' – 9"	929	167	18"	39' – 9"	4,434	108	9"	7' – 0"	505	216	9"	4' – 9"	685	15' – 5"	2,224	48' – 3"	129	100	278	3.602	861.3	3.6	407	147.7	34,860
6	9' – 0"	7' – 0"	9"	7"	162	#6	6"	57' – 10"	14,072	108	#6	9"	13' – 1"	2,122	8' – 7"	1,392	162	#6	6"	52' – 5"	12,754	42	18"	39' – 9"	1,115	198	18"	39' – 9"	5,257	108	9"	7' – 0"	505	270	9"	4' – 9"	857	15' – 5"	2,781	57' – 10"	155	118	328	4.285	1,021.4	4.3	483	175.7	41,338
2	9' – 0"	8' – 0"	9"	7"	162	#6	6"	19' – 6"	4,745	108	#6	9"	14' – 1"	2,285	8' – 7"	1,392	162	#6	6"	14' – 1"	3,427	14	18"	39' – 9"	372	80	18"	39' – 9"	2,124	108	9"	8' – 0"	577	54	9"	4' – 9"	171	17' – 5"	628	19' – 6"	52	42	117	1.616	393.0	1.5	169	66.1	15,890
3	9' – 0"	8' – 0"	9"	7"	162	#6	6"	29' – 1"	7,077	108	#6	9"	14' – 1"	2,285	8' – 7"	1,392	162	#6	6"	23' – 8"	5,759	21	18"	39' – 9"	558	113	18"	39' – 9"	3,000	108	9"	8' – 0"	577	108	9"	4' – 9"	343	17' – 5"	1,257	29' – 1"	78	62	173	2.321	556.2	2.2	251	95.0	22,499
4	9' – 0"	8' – 0"	9"	7"	162	#6	6"	38' – 8"	9,409	108	#6	9"	14' – 1"	2,285	8' – 7"	1,392	162	#6	6"	33' – 3"	8,091	28	18"	39' – 9"	743	146	18"	39' – 9"	3,877	108	9"	8' – 0"	577	162	9"	4' – 9"	514	17' – 5"	1,885	38' – 8"	103	80	223	3.026	719.3	2.9	326	123.9	29,099
5	9' – 0"	8' – 0"	9"	7"	162	#6	6"	48' – 3"	11,740	108	#6	9"	14' – 1"	2,285	8' – 7"	1,392	162	#6	6"	42' – 10"	10,422	35	18"	39' – 9"	929	179	18"	39' – 9"	4,753	108	9"	8' – 0"	577	216	9"	4' – 9"	685	17' – 5"	2,513	48' – 3"	129	100	278	3.731	882.4	3.6	407	152.8	35,703
6	9' – 0"	8' – 0"	9"	7"	162	#6	6"	57' – 10"	14,072	108	#6	9"	14' – 1"	2,285	8' – 7"	1,392	162	#6	6"	52' – 5"	12,754	42	18"	39' – 9"	1,115	212	18"	39' – 9"	5,629	108	9"	8' – 0"	577	270	9"	4' – 9"	857	17' – 5"	3,141	57' – 10"	155	118	328	4.437	1,045.6	4.3	483	181.8	42,305
2	9' – 0"	9' – 0"	9"	7"	162	#6	6"	19' – 6"	4,745	108	#6	9"	15' – 1"	2,447	8' – 7"	1,392	162	#6	6"	14' – 1"	3,427	14	18"	39' – 9"	372	86	18"	39' – 9"	2,284	108	9"	9' – 0"	649	54	9"	4' – 9"	171	19' – 5"	700	19' – 6"	52	42	117	1.681	404.7	1.5	169	68.7	16,356
3	9' – 0"	9' – 0"	9"	7"	162	#6	6"	29' – 1"	7,077	108	#6	9"	15' – 1"	2,447	8' – 7"	1,392	162	#6	6"	23' – 8"	5,759	21	18"	39' – 9"	558	121	18"	39' – 9"	3,213	108	9"	9' – 0"	649	108	9"	4' – 9"	343	19' – 5"	1,401	29' – 1"	78	62	173	2.407	571.0	2.2	251	98.4	23,090
4	9' – 0"	9' – 0"	9"	7"	162	#6	6"	38' – 8"	9,409	108	#6	9"	15' – 1"	2,447	8' – 7"	1,392	162	#6	6"	33' – 3"	8,091	28	18"	39' – 9"	743	156	18"	39' – 9"	4,142	108	9"	9' – 0"	649	162	9"	4' – 9"	514	19' – 5"	2,101	38' – 8"	103	80	223	3.134	737.2	2.9	326	128.2	29,814
5	9' – 0"	9' – 0"	9"	7"	162	#6	6"	48' – 3"	11,740	108	#6	9"	15' – 1"	2,447	8' – 7"	1,392	162	#6	6"	42' – 10"	10,422	35	18"	39' – 9"	929	191	18"	39' – 9"	5,072	108	9"	9' – 0"	649	216	9"	4' – 9"	685	19' – 5"	2,802	48' – 3"	129	100	278	3.861	903.5	3.6	407	158.0	36,545
6	9' – 0"	9' – 0"	9"	7"	162	#6	6"	57' – 10"	14,072	108	#6	9"	15' – 1"	2,447	8' – 7"	1,392	162	#6	6"	52' – 5"	12,754	42	18"	39' – 9"	1,115	226	18"	39' – 9"	6,001	108	9"	9' – 0"	649	270	9"	4' – 9"	857	19' – 5"	3,502	57' – 10"	155	118	328	4.588	1,069.7	4.3	483	187.8	43,272

DISCLAIMER:
The use of this standard is governed by the "Texas Engineering Practice Act". No warranty of any kind is made by TxDOT for any purpose whatsoever. TxDOT assumes no responsibility for the conversion of this standard to other formats or for incorrect results or damages resulting from its use.

DATE: 12/21/2020 11:20:48 PM
FILE: c:\pwworking\khq\pwprod\seth.rutledge\d0101353\mc910ste-20.dgn

HL93 LOADING SHEET 2 OF 2

Texas Department of Transportation

Bridge Division Standard

MULTIPLE BOX CULVERTS CAST-IN-PLACE

9'-0" SPAN

0' TO 10' FILL

MC-9-10

FILE: mc910ste-20.dgn	DN: TBE	CK: BMP	DW: TxDOT	CK: TxDOT
©TxDOT February 2020	CONT	SECT	JOB	HIGHWAY
REVISIONS	0055	15	072	US 84
	DIST	COUNTY		SHEET NO.
	WAC	MCLENNAN		214

DISCLAIMER:
The use of this standard is governed by the "Texas Engineering Practice Act". No warranty of any kind is made by TxDOT for any purpose whatsoever. TxDOT assumes no responsibility for the conversion of this standard to other formats or for incorrect results or damages resulting from its use.

DATE: 12/21/2020 11:20:52 PM
FILE: c:\pwworking\khoa\pwprod\seth.rutledge\d0101353\mc-mdste-20.dgn

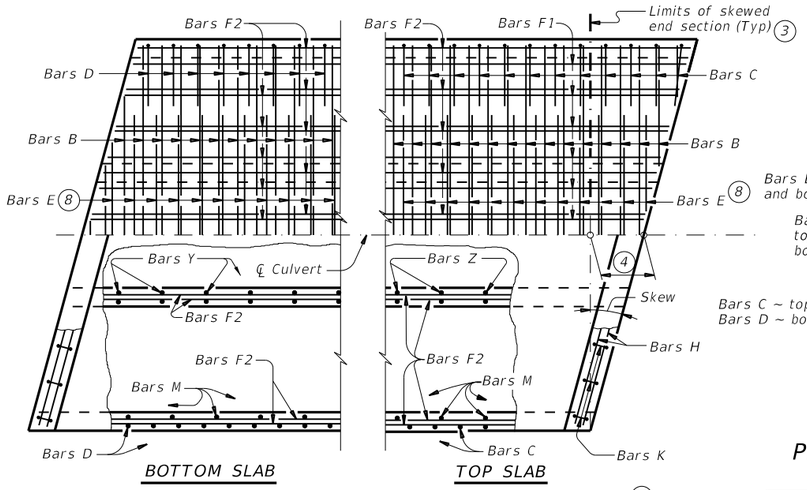

PLAN OF SKEWED ENDS ~ FROM 0° TO 15° 7

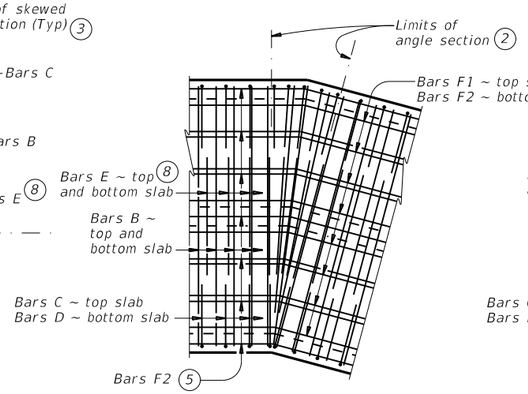

PLAN OF ANGLE SECTION ~ FROM 0° TO 15°

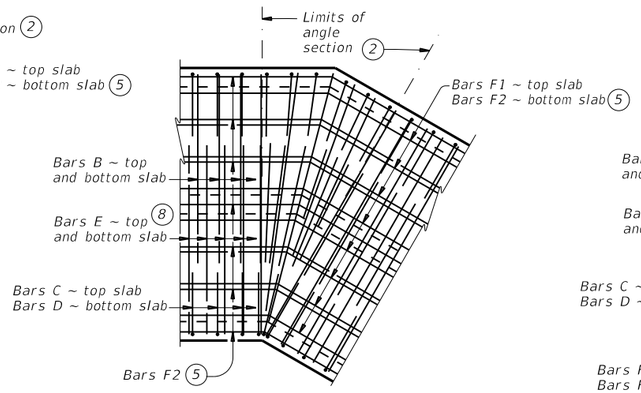

PLAN OF ANGLE SECTION ~ OVER 15° TO 30°

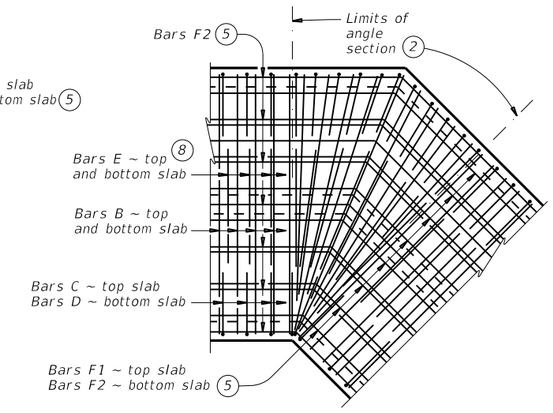

PLAN OF ANGLE SECTION ~ OVER 30° TO 45°

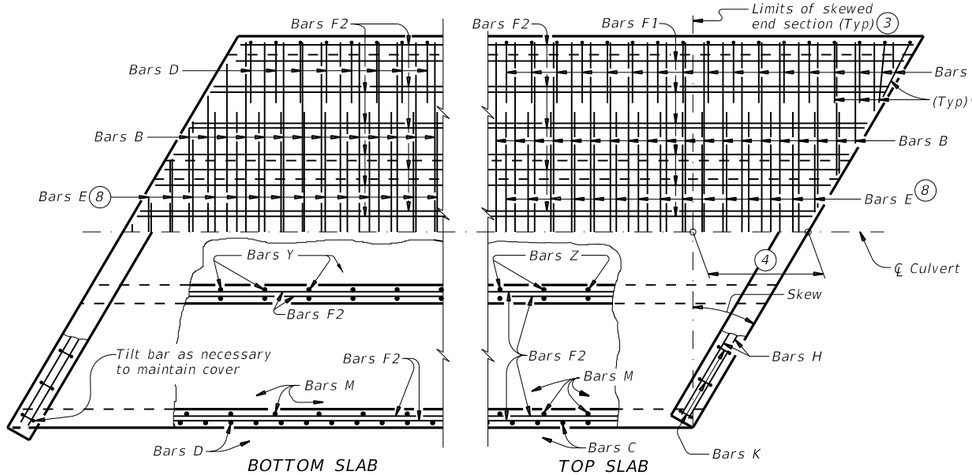

PLAN OF SKEWED ENDS ~ OVER 15° TO 30°

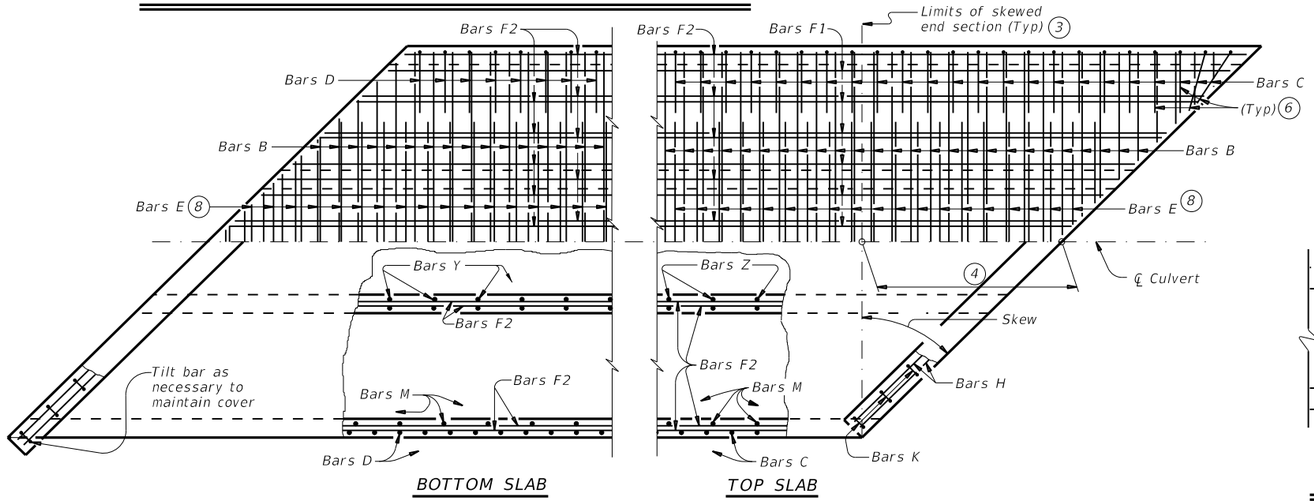

PLAN OF SKEWED ENDS ~ OVER 30° TO 45°

1 For skewed box culverts with less than 2'-0" of fill, break back the top slab to provide a 1'-10" minimum lap of the existing longitudinal bars with the longitudinal bars in the extension.

For non-skewed box culverts with less than 2'-0" of fill and for skewed or non-skewed culverts with a fill depth of 2'-0" or greater, break back the top slab to provide a 1'-10" minimum lap of the existing longitudinal bars with the longitudinal bars in the extension. Alternatively, if the box is non-skewed, embed #6 anchor bars with a Type III, Class C, D, E, or F anchor adhesive into the existing walls, top and bottom slab at 1'-6" center-to-center spacing. Minimum embedment depth is 8". Anchor adhesive chosen must be able to achieve a basic bond strength in tension, Nba, of 26.4 kips. Submit signed and sealed calculations or the manufacturer's published literature showing the proposed anchor adhesive's ability to develop this load to the Engineer for approval prior to use. Anchor installation, including hole size, drilling, and clean out, must be in accordance with Item 450, "Railing." Test adhesive anchors in accordance with Item 450.3.3, "Tests." Test 3 anchors per 100 anchors installed.

Break back wings and apron as necessary to install the extension. Clean and extend the exposed wingwall and apron reinforcing into the extension. When lengthening existing box culverts with dimensions different than current standard dimensions, form horizontal and vertical transitions as directed by the Engineer. Match bottom slabs to maintain an uninterrupted flow line. Field bend existing and new reinforcing into transitions and maintain specified cover requirements. For top slabs of culverts with overlay, with 1-to-2 course surface treatment, or with the top slab as the final riding surface, adjust the "H" dimension to provide a smooth riding surface.

2 When the spacing between Bars B or Bars E becomes less than half of the normal spacing, cut bars to avoid conflict.

3 The length of Bars B and Bars E will vary in the skewed end sections.

4 [One half of overall width] x [tangent of the skew angle]

5 Place Bars F1 and F2 continuously through the angle section. Bend Bars F1 and F2 to remain parallel to the walls of the box culvert.

6 When necessary to avoid conflict in acute corners, shorten the slab extension leg of Bars C and Bars D to a minimum of 1'-6" for skews of 30° thru 45°.

7 At the Contractor's option, for skews of 15° or less, place Bars B, C, D, and E parallel to the skewed end while maintaining spacing along centerline of box. Increase lengths of Bars B and Bars E shown on the Multiple Box Culverts Cast-In-Place (MC) standard sheets to accommodate the skew.

8 Extend Bars E as shown on the MC standard sheet for direct traffic culverts.

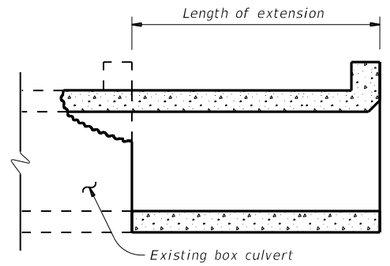

LENGTHENING DETAIL 1

CONSTRUCTION NOTES:

Do not use permanent forms.
When required, lap Bars H 1'-8" for uncoated or galvanized bars.
Provide a minimum of 1 ½" clear cover.

MATERIAL NOTES:

Provide Grade 60 reinforcing steel.
Provide galvanized reinforcing steel, if required elsewhere in the plans.
Provide Class C concrete (f'c = 3,600 psi) with these exceptions: provide Class S concrete (f'c = 4,000 psi) for top slabs of culverts with overlay, with 1-to-2 course surface treatment, or with the top slab as the final riding surface.

GENERAL NOTES:

Designed according to AASHTO LRFD Bridge Design Specifications.
Refer to Multiple Box Culverts Cast-in-Place (MC) standard sheets for details of straight sections of culvert.
For skewed sections and angle sections, refer to Multiple Box Culverts Cast-in-Place (MC) standard sheets for slab and wall dimensions, bar sizes, maximum bar spacing, and any other details not shown.
For skewed ends with curbs, adjust length of Bars H, number of Bars K, curb concrete volume, and reinforcing steel weight by dividing the values shown on the Multiple Box Culverts Cast-In-Place (MC) standard sheets by the cosine of the skew angle.

Cover dimensions are clear dimensions, unless noted otherwise.

HL93 LOADING

Texas Department of Transportation

Bridge Division Standard

MULTIPLE BOX CULVERTS CAST-IN-PLACE MISCELLANEOUS DETAILS

MC-MD

FILE: mc-mdste-20.dgn	DN: TxDOT	CK: TxDOT	DW: TxDOT	CK: TxDOT
©TxDOT February 2020	CONT	SECT	JOB	HIGHWAY
REVISIONS	0055	15	072	US 84
	DIST	COUNTY		SHEET NO.
	WAC	MCLENNAN		215

DISCLAIMER:
The use of this standard is governed by the "Texas Engineering Practice Act". No warranty of any kind is made by TxDOT for any purpose whatsoever. TxDOT assumes no responsibility for the conversion of this standard to other formats or for incorrect results or damages resulting from its use.

DATE: 12/21/2020 11:20:56 PM
FILE: c:\pwworking\khd\pwprod\seth.rutledge\d0101353\prestd08-20.dgn

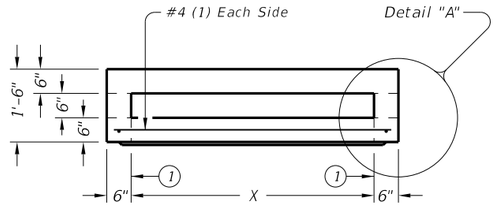

ELEVATION VIEW

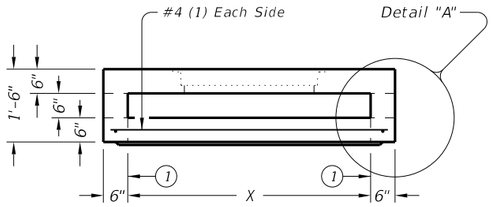

ELEVATION VIEW

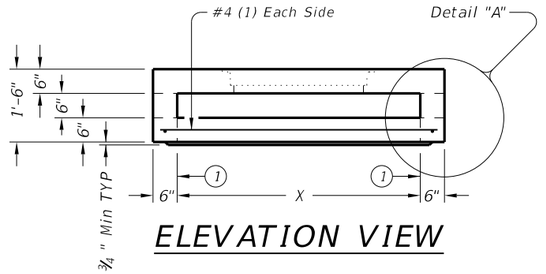

ELEVATION VIEW

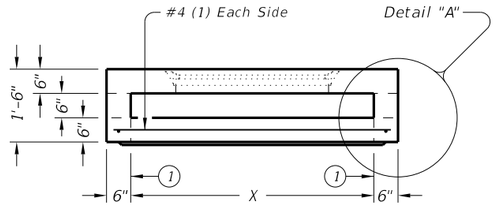

ELEVATION VIEW

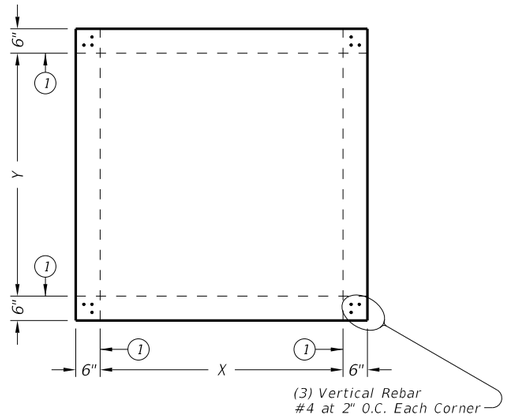

PLAN VIEW
NO OPENINGS

STYLE 'SL'

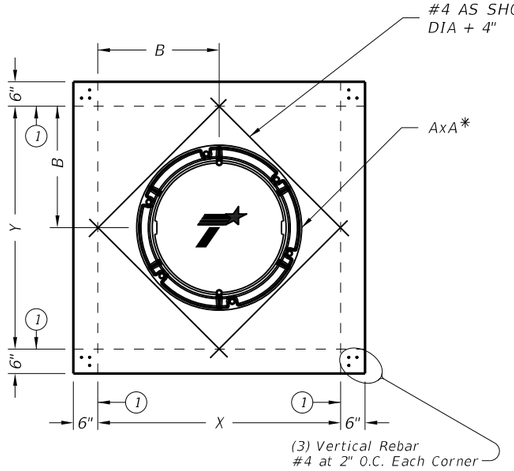

PLAN VIEW
32" DIA CAST-IN RING & COVER

STYLE 'RC'

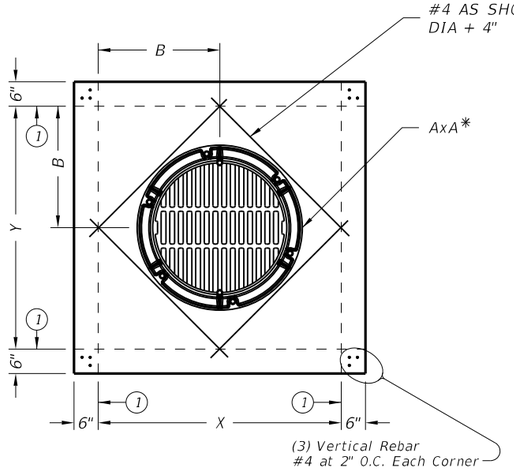

PLAN VIEW
32" DIA CAST-IN RING & GRATE

STYLE 'RG'

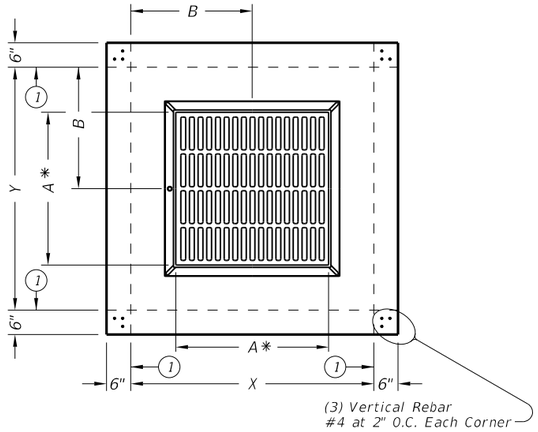

PLAN VIEW
CAST-IN FRAME & GRATE

STYLE 'FG'

Style	Size (X x Y)	A x A *	B x B	Short Span Reinf Steel Area	Long Span Reinf Steel Area
SL	3'x3'	n/a	n/a	0.37 in²/ft	0.37 in²/ft
RC,RG	3'x3'	32" Dia	1.5'x1.5'	0.37 in²/ft	0.37 in²/ft
FG	3'x3'	3'x3'	1.5'x1.5'	0.37 in²/ft	0.37 in²/ft
SL	4'x4'	n/a	n/a	0.34 in²/ft	0.34 in²/ft
RC,RG	4'x4'	32" Dia	2'x2'	0.34 in²/ft	0.34 in²/ft
FG	4'x4'	3'x3'	2'x2'	0.34 in²/ft	0.34 in²/ft
FG	4'x4'	4'x4'	2'x2'	0.34 in²/ft	0.34 in²/ft
SL	5'x5'	n/a	n/a	0.43 in²/ft	0.43 in²/ft
RC,RG	5'x5'	32" Dia	2.5'x2.5'	0.68 in²/ft	0.68 in²/ft
FG	5'x5'	3'x3'	2.5'x2.5'	0.43 in²/ft	0.43 in²/ft
FG	5'x5'	4'x4'	2.5'x2.5'	0.43 in²/ft	0.43 in²/ft

* Nominal frame/grate or ring/cover size.

(1) Matches inside face of wall of precast base or riser below inlet.

FABRICATION NOTES:
1. Provide Class "H" concrete in accordance with Item 421 and having a minimum compressive strength of 5,000 psi.
2. Provide Grade 60 reinforcing steel or equivalent area of WWR.
3. Provide clear cover of ¾" to reinforcing from bottom of slab for structural reinforcement. Place short span reinforcing closest to surface.
4. No substitution is allowed for diagonal #4 bars around openings.
5. Design tongue and groove joints for full closure on both shoulders. Minimum spigot depth is ¾".
6. Provide lifting devices in conformance with Manufacturer's recommendations.

INSTALLATION NOTES:
1. PAZD is for use in ditches and medians outside of the horizontal clearance (clear zone). Precast Area Zone Drain is not intended for direct traffic and may not be placed in roadway.
2. Seal tongue and groove joints with preformed or bulk mastic in conformance with Manufacturer's recommendations. Tongue and groove joints may be grouted no more than 1" between each section, or ½ the joint depth, whichever is greater.
3. Do not grout rubber gasket joints without Manufacturer's recommendation.

GENERAL NOTES:
1. Designed according to ASTM C913.
2. Payment for inlet is per Item 465, "Junction Boxes, Manholes, and Inlets" by type, style, size, and opening size (when applicable).

Construct cast-in-place reinforced concrete apron when shown elsewhere in plans. Use Class "A" concrete. Apron is subsidiary to PAZD. Apron is 1'-6" Min width around precast zone drain.

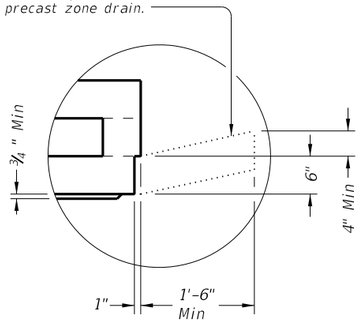

DETAIL "A"

(Reinforcing not shown for clarity)

When an apron is to be cast around PAZD, use detail above to create an apron ledge on all 4 sides.

Texas Department of Transportation

Bridge Division Standard

PRECAST AREA ZONE DRAIN

PAZD

FILE: prestd08-20.dgn	DN: TxDOT	CK: TxDOT	DW: TxDOT	CK: TxDOT
©TxDOT February 2020	CONT	SECT	JOB	HIGHWAY
REVISIONS	0055	15	072	US 84
	DIST	COUNTY		SHEET NO.
	WAC	MCLENNAN		216

DISCLAIMER:
The use of this standard is governed by the "Texas Engineering Practice Act". No warranty of any kind is made by TxDOT for any purpose whatsoever. TxDOT assumes no responsibility for the conversion of this standard to other formats or for incorrect results or damages resulting from its use.

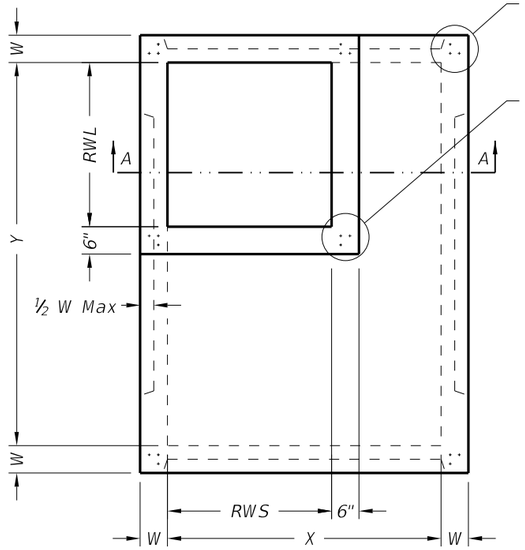

PLAN VIEW "A"

SQUARE REDUCED RISER OPTION

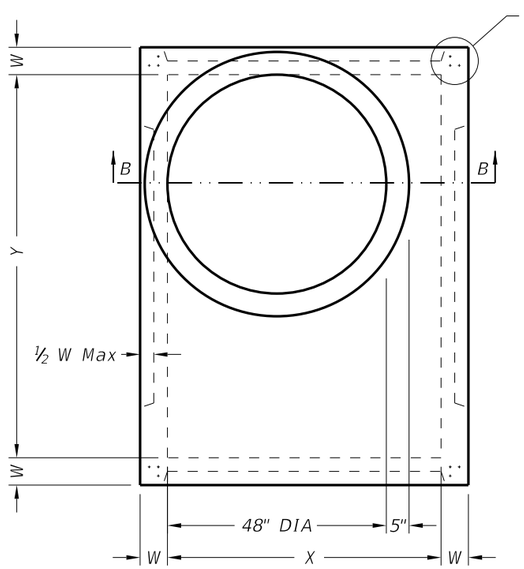

PLAN VIEW "B"

ROUND REDUCED RISER OPTION

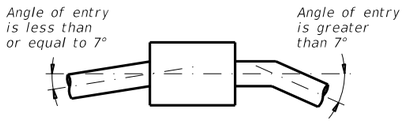

PIPE CONNECTION DETAIL

Connect pipes within 7° of normal to PB wall.
If necessary, use pipe elbow or curved
approach alignment to stay within this limit.

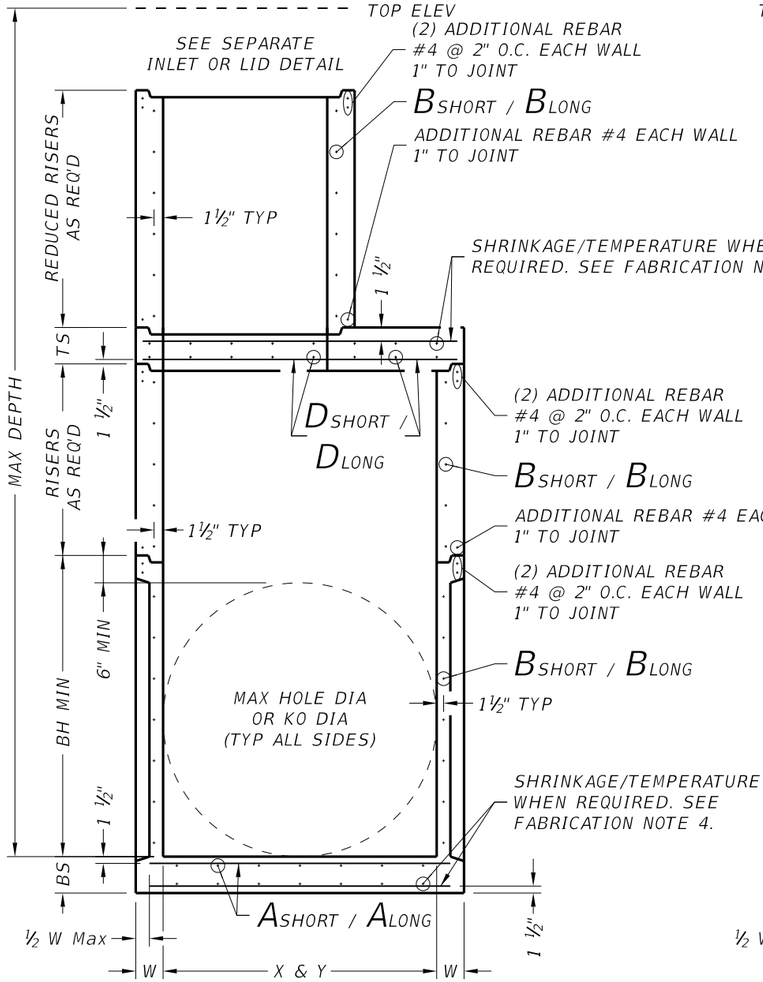

SECTION A-A

SQUARE REDUCED RISER OPTION

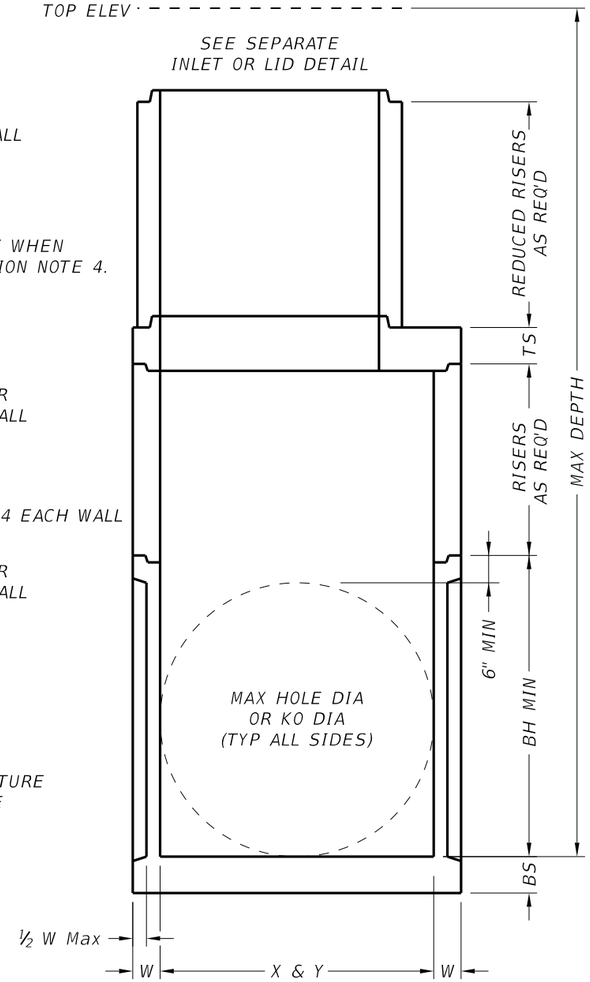

SECTION B-B

ROUND REDUCED RISER OPTION

FABRICATION NOTES:

1. Provide Class "H" concrete in accordance with Item 421 and having a minimum compressive strength of 5,000 psi.
2. Provide Grade 60 reinforcing steel or equivalent area of WWR.
3. Provide typical clear cover of 1 ½" to reinforcing steel at interior or exterior walls.
4. Walls or slabs with a thickness of 8" or greater require shrinkage and temperature reinforcing steel. Provide steel area = 0.11 in²/ft each way.
5. No substitution is allowed for vertical and horizontal #4 bars in corners.
6. Manufacture base and risers to nearest 3" increment.
7. Design tongue and groove joints for full closure on both shoulders. Minimum spigot depth is ¾".
8. Provide lifting devices in conformance with Manufacturer's recommendations.
9. See sheet PDD for sizes, dimensions, and reinforcing steel not shown.

Cover dimensions are clear dimensions, unless noted otherwise.

INSTALLATION NOTES:

1. If required elsewhere. Inverts (benching) to be provided by Contractor. Concrete or mortar used for invert is subsidiary to specified inlet or manhole.
2. Seal tongue and groove joints with preformed or bulk mastic in conformance with Manufacturer's recommendations. Tongue and groove joints may be grouted no more than 1" between each section, or ½ the joint depth, whichever is greater.
3. Do not grout rubber gasket joints without Manufacturer's recommendation.
4. For rigid pipe, cut hole in thin wall panel (KO) 4" Max, 2" Min larger than pipe OD.
5. For flexible pipe, consult boot/seal Manufacturer's specification for placement tolerance and hole size. Center pipe in hole and install boot/seal per Manufacturer's specification.

GENERAL NOTES:

1. Precast Base consists of base slab, base unit, risers (as required), reducing slab (as required), and reduced risers (as required). See sheet PDD for sizes.
2. Designed according to ASTM C913.
3. Payment for precast base is subsidiary to the specified inlet, per Item 465, "Junction Boxes, Manholes, and Inlets."

HL93 LOADING

Texas Department of Transportation

Bridge Division Standard

PRECAST BASE

PB

FILE: prestd01-20.dgn	DN: TxDOT	CK: TxDOT	DW: TxDOT	CK: TxDOT
©TxDOT February 2020	CONT	SECT	JOB	HIGHWAY
REVISIONS	0055	15	072	US 84
	DIST	COUNTY		SHEET NO.
	WAC	MCLENNAN		217

DATE: 12/21/2020 11:21:00 PM
FILE: c:\pworking\xkha\pwprod\seth.rutledge\d0101353\prestd01-20.dgn

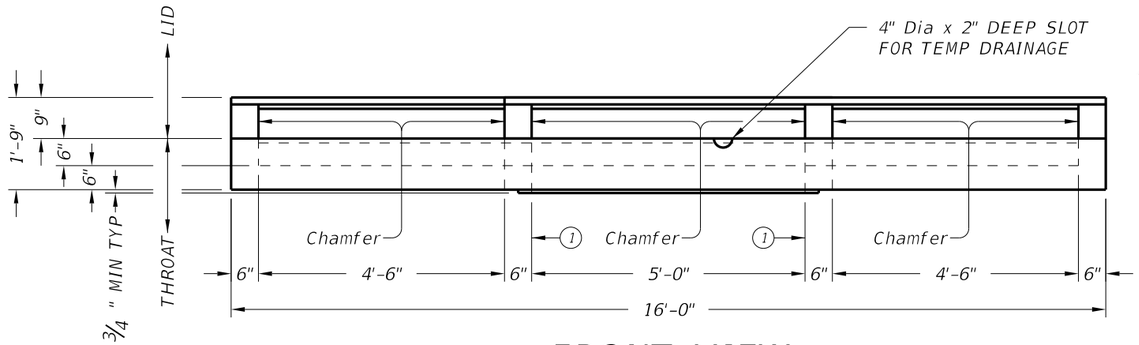

FRONT VIEW

(SHOWING LEFT AND RIGHT EXTENSIONS)

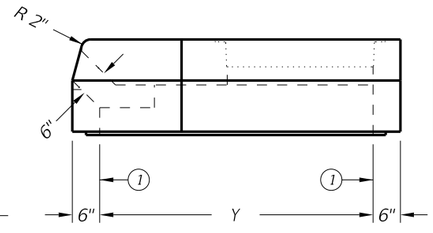

RIGHT VIEW

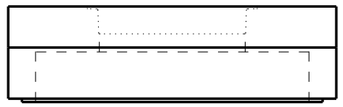

REAR VIEW

(EXTENSIONS NOT SHOWN)

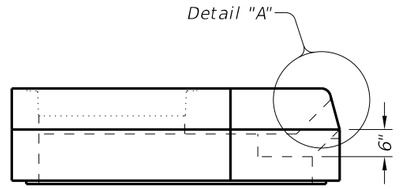

LEFT VIEW

(1) Matches inside face of wall of precast base or riser below inlet.

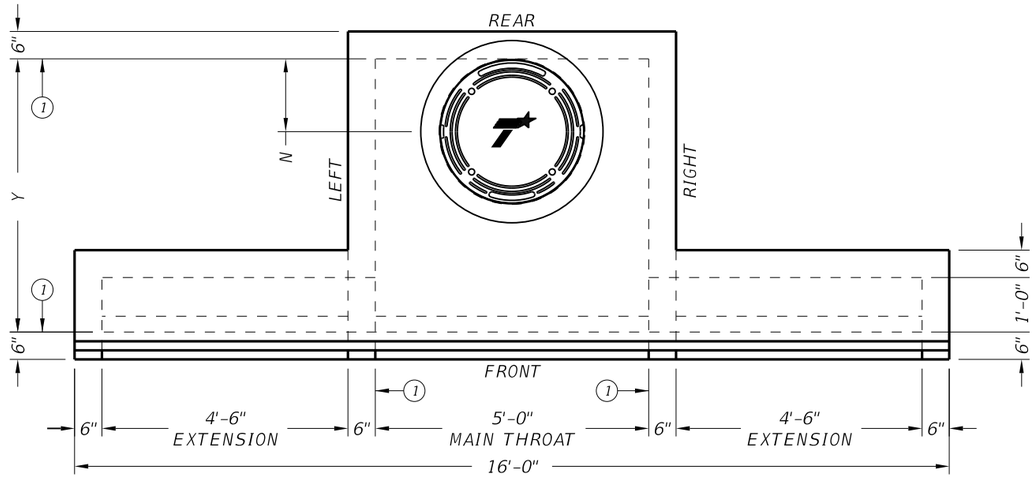

PLAN VIEW

(SHOWING LEFT AND RIGHT EXTENSIONS)

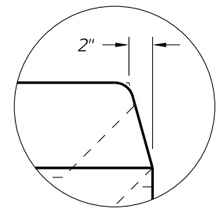

DETAIL "A"

HS20 LOADING

Texas Department of Transportation

Bridge Division Standard

PRECAST CURB INLET OUTSIDE ROADWAY

PCO

FILE: prestd03-20.dgn	DN: TxDOT	CK: TxDOT	DW: TxDOT	CK: TxDOT
©TxDOT February 2020	CONT	SECT	JOB	HIGHWAY
REVISIONS	0055	15	072	US 84
	DIST	COUNTY		SHEET NO.
	WAC	MCLENNAN		218

DISCLAIMER:
The use of this standard is governed by the "Texas Engineering Practice Act". No warranty of any kind is made by TxDOT for any purpose whatsoever. TxDOT assumes no responsibility for the conversion of this standard to other formats or for incorrect results or damages resulting from its use.

DATE: 12/21/2020 11:21:04 PM
FILE: c:\pwworking\xko\pwprod\seth.rutledge\d0101353\prestd03-20.dgn

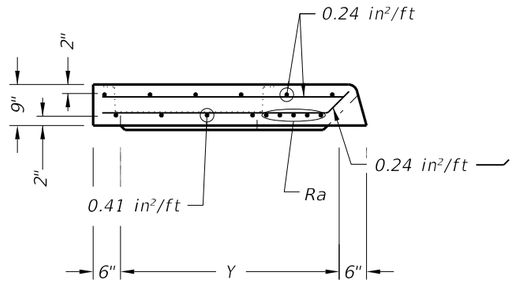

LID SECTION A-A

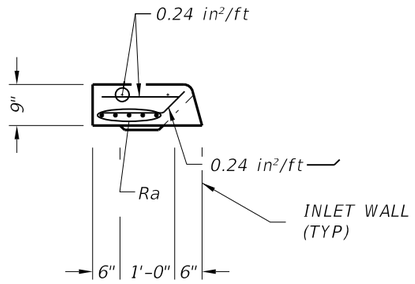

LID SECTION B-B

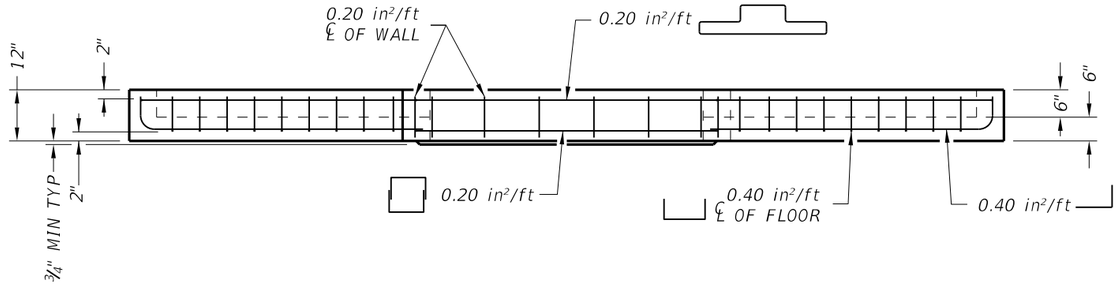

THROAT ELEVATION VIEW

(SHOWING LEFT AND RIGHT EXTENSIONS)

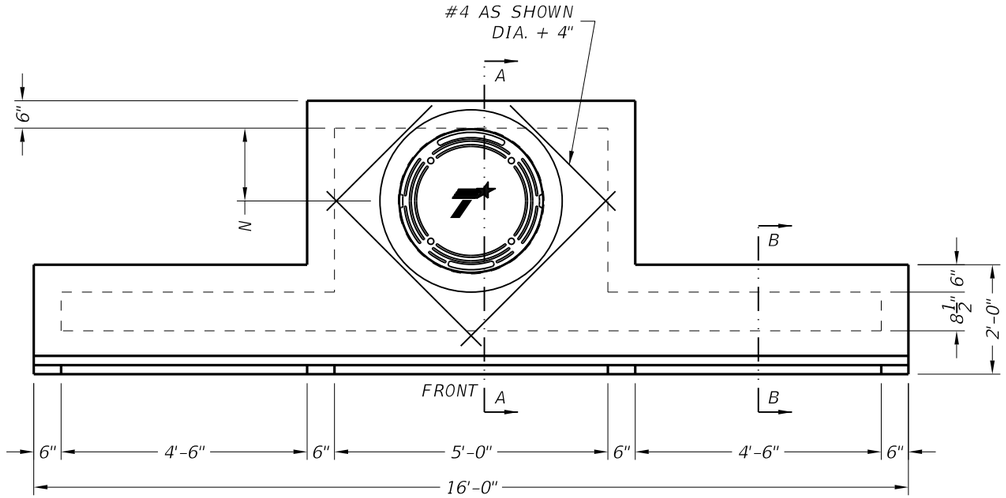

LID PLAN VIEW

(SHOWING LEFT AND RIGHT EXTENSIONS)

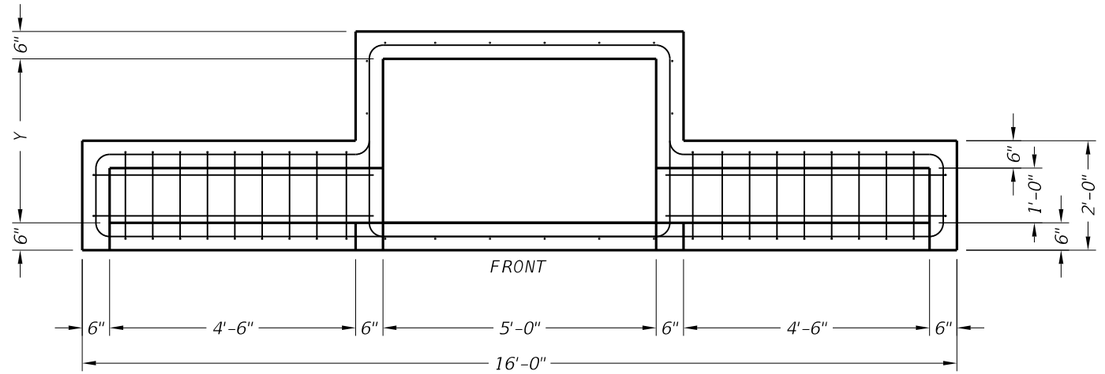

THROAT PLAN VIEW

(SHOWING LEFT AND RIGHT EXTENSIONS)

SIZE(Y)	N	MH DIA*	Ra
3'	9"	18"	(4) #5 Additional
4'	16"	32"	(4) #5 Additional
5'	16"	32"	(4) #5 Additional
6'	16"	32"	(4) #5 Additional

* Nominal ring and cover size.

FABRICATION NOTES:

1. Provide Class "H" concrete in accordance with Item 421 and having a minimum compressive strength of 5,000 psi.
2. Provide Grade 60 reinforcing steel or equivalent area of WWR.
3. Extensions may be right, left, both or none. Provide extensions as specified elsewhere in the plans.
4. Design tongue and groove joints for full closure on both shoulders. Minimum spigot depth is ¾". Lid may employ a butt joint with dowels at the Contractor's option.
5. Provide lifting devices in conformance with Manufacturer's recommendations.
6. Provide cast iron solid cover, unless noted otherwise elsewhere in the plans.
7. Chamfer vertical edges of inlet lid ¾" as shown in Front View, sheet 1.

INSTALLATION NOTES:

1. Inlet throat and lid are not intended for direct traffic. Do not place in roadway.
2. Seal tongue and groove joints and butt joints with preformed or bulk mastic in conformance with Manufacturer's recommendations. Tongue and groove joints may be grouted no more than 1" between each section, or ½ the joint depth, whichever is greater.
3. Do not grout rubber gasket joints without Manufacturer's recommendation.

GENERAL NOTES:

1. Designed according to ASTM C913.
2. Open area of main throat = 360 sq in. Open area of one extension throat = 324 sq in.
3. Payment for inlet is per Item 465, "Junction Boxes, Manholes, and Inlets" by type, size, and extension placement. Extensions are subsidiary to inlet.

Cover dimensions are clear dimensions, unless noted otherwise.

HS20 LOADING SHEET 2 OF 2

Texas Department of Transportation

Bridge Division Standard

PRECAST CURB INLET OUTSIDE ROADWAY

PCO

FILE: prestd03-20.dgn	DN: TxDOT	CK: TxDOT	DW: TxDOT	CK: TxDOT
©TxDOT February 2020	CONT	SECT	JOB	HIGHWAY
REVISIONS	0055	15	072	US 84
	DIST	COUNTY		SHEET NO.
	WAC	MCLENNAN		219

DISCLAIMER:
The use of this standard is governed by the "Texas Engineering Practice Act". No warranty of any kind is made by TxDOT for any purpose whatsoever. TxDOT assumes no responsibility for the conversion of this standard to other formats or for incorrect results or damages resulting from its use.

DATE: 12/21/2020 11:21:04 PM
FILE: c:\pwworking\khoa\pwprod\seth.rutledge\d0101353\prestd03-20.dgn

	Size	MAX DEPTH = 15 ft. to top of BASE SLAB										MAX DEPTH = 25 ft. to top of BASE SLAB										Min Height (See Gen Note 3)	Max HOLE DIA (See Fab Note 2)	Max KO DIA (See Fab Note 2)
		Base Slab			Base Unit or Riser Walls			Below Grade Slab (w/PJB) Reducing Slab (w/PB)				Base Slab			Base Unit or Riser Walls			Below Grade Slab (w/PJB) Reducing Slab (w/PB)						
		Short Span Reinf Steel Area	Long Span Reinf Steel Area	Thickness	Short Span Reinf Steel Area	Long Span Reinf Steel Area	Thickness	Reduced Riser Size	Short Span Reinf Steel Area	Long Span Reinf Steel Area	Thickness	Short Span Reinf Steel Area	Long Span Reinf Steel Area	Thickness	Short Span Reinf Steel Area	Long Span Reinf Steel Area	Thickness	Reduced Riser Size	Short Span Reinf Steel Area	Long Span Reinf Steel Area	Thickness			
	X x Y	Ashort	Along	BS	Bshort	Blong	W	RWSxRWL or ID	Dshort	Dlong	TS	Ashort	Along	BS	Bshort	Blong	W	RWSxRWL or ID	Dshort	Dlong	TS	BH MIN	HOLE DIA	KO DIA
	ft.	in^2/ft	in^2/ft	in.	in^2/ft	in^2/ft	in.	ft. **	in^2/ft	in^2/ft	in.	in^2/ft	in^2/ft	in.	in^2/ft	in^2/ft	in.	ft. **	in^2/ft	in^2/ft	in.	ft.	in.	in.
Precast Junction Box (PJB)	3x3	0.23	0.23	6	0.19	0.19	6	N/A	0.37	0.37	9	0.29	0.29	6	0.24	0.24	6	N/A	0.37	0.37	9	3.5	36	36
	4x4	0.29	0.29	6	0.24	0.24	6	N/A	0.41	0.41	9	0.47	0.47	6	0.38	0.38	6	N/A	0.41	0.41	9	4.5	48	48
	3x5	0.29	0.18	6	0.19	0.35	6	N/A	0.48	0.48	9	0.39	0.18	6	0.23	0.59	6	N/A	0.48	0.48	9	3.5	36/60	36/60
	4x5	0.36	0.18	6	0.22	0.34	6	N/A	0.42	0.42	9	0.53	0.26	6	0.39	0.59	6	N/A	0.42	0.42	9	4.5	48/60	48/60
	5x5	0.36	0.36	6	0.34	0.34	6	N/A	0.43	0.43	9	0.62	0.62	6	0.59	0.59	6	N/A	0.43	0.43	9	5.5	60	60
	5x6	0.27	0.27	9	0.34	0.45	6	N/A	0.48	0.48	9	0.47	0.45	9	0.38	0.54	8	N/A	0.48	0.48	9	5.5	60/72	60/72
	6x6	0.27	0.27	9	0.45	0.45	6	N/A	0.56	0.56	9	0.52	0.52	9	0.54	0.54	8	N/A	0.56	0.56	9	6.5	72	72
	8x8	0.46	0.46	9	0.51	0.51	8	N/A	0.45	0.45	12	0.87	0.87	9	0.59	0.59	10	N/A	0.45	0.45	12	8.5	96	72
Precast Base (PB)	3x3	0.23	0.23	6	0.19	0.19	6	N/A	N/A	N/A	N/A	0.29	0.29	6	0.24	0.24	6	N/A	N/A	N/A	N/A	3.5	36	36
	4x4	0.29	0.29	6	0.24	0.24	6	N/A	N/A	N/A	N/A	0.47	0.47	6	0.38	0.38	6	N/A	N/A	N/A	N/A	4.5	48	48
	3x5	0.29	0.18	6	0.19	0.35	6	3x3	0.30	0.34	9	0.39	0.18	6	0.23	0.59	6	3x3	0.40	0.40	9	3.5	36/60	36/60
	4x5	0.36	0.18	6	0.22	0.34	6	3x3	0.30	0.30	9	0.53	0.26	6	0.39	0.59	6	3x3	0.46	0.37	9	4.5	48/60	48/60
	4x5	0.36	0.18	6	0.22	0.34	6	4x4	0.30	0.30	9	0.53	0.26	6	0.39	0.59	6	4x4	0.39	0.39	9	4.5	48/60	48/60
	4x5	0.36	0.18	6	0.22	0.34	6	48"	0.39	0.39	9	0.53	0.26	6	0.39	0.59	6	48"	0.47	0.47	9	4.5	48/60	48/60
	4x5	0.36	0.18	6	0.22	0.34	6	3x5	0.33	0.40	9	0.53	0.26	6	0.39	0.59	6	3x5	0.48	0.48	9	4.5	48/60	48/60
	5x5	0.36	0.36	6	0.34	0.34	6	3x3	0.34	0.34	9	0.62	0.62	6	0.59	0.59	6	3x3	0.53	0.53	9	5.5	60	60
	5x5	0.36	0.36	6	0.34	0.34	6	4x4	0.36	0.36	9	0.62	0.62	6	0.59	0.59	6	4x4	0.64	0.64	9	5.5	60	60
	5x5	0.38	0.38	6	0.34	0.34	6	48"	0.36	0.36	9	0.62	0.62	6	0.59	0.59	6	48"	0.64	0.64	9	5.5	60	60
	5x5	0.36	0.36	6	0.34	0.34	6	3x5	0.34	0.40	9	0.62	0.62	6	0.59	0.59	6	3x5	0.53	0.53	9	5.5	60	60
	5x6	0.31	0.31	9	0.34	0.45	6	3x3	0.34	0.34	9	0.47	0.45	9	0.38	0.54	8	3x3	0.61	0.50	9	5.5	60/72	60/72
	5x6	0.27	0.27	9	0.34	0.45	6	4x4	0.36	0.45	9	0.47	0.45	9	0.38	0.54	8	4x4	0.74	0.57	9	5.5	60/72	60/72
	5x6	0.29	0.29	9	0.34	0.45	6	48"	0.36	0.45	9	0.47	0.45	9	0.38	0.54	8	48"	0.74	0.57	9	5.5	60/72	60/72
	5x6	0.29	0.29	9	0.34	0.45	6	3x5	0.45	0.45	9	0.47	0.45	9	0.38	0.54	8	3x5	0.61	0.61	9	5.5	60/72	60/72
	6x6	0.29	0.29	9	0.45	0.45	6	3x3	0.41	0.41	9	0.52	0.52	9	0.54	0.54	8	3x3	0.74	0.74	9	6.5	72	72
	6x6	0.27	0.27	9	0.45	0.45	6	4x4	0.45	0.45	9	0.52	0.52	9	0.54	0.54	8	4x4	0.87	0.87	9	6.5	72	72
	6x6	0.29	0.29	9	0.45	0.45	6	48"	0.45	0.45	9	0.52	0.52	9	0.54	0.54	8	48"	0.87	0.87	9	6.5	72	72
	6x6	0.29	0.29	9	0.45	0.45	6	3x5	0.45	0.45	9	0.52	0.52	9	0.54	0.54	8	3x5	0.87	0.87	9	6.5	72	72
	8x8	0.52	0.52	9	0.51	0.51	8	3x3	0.61	0.61	12	0.91	0.91	9	0.70	0.70	10	3x3	0.85	0.85	12	8.5	96	72
	8x8	0.52	0.52	9	0.51	0.51	8	4x4	0.70	0.70	12	0.87	0.87	9	0.70	0.70	10	4x4	1.01	1.01	12	8.5	96	72
	8x8	0.52	0.52	9	0.51	0.51	8	48"	0.70	0.70	12	0.87	0.87	9	0.70	0.70	10	48"	1.01	1.01	12	8.5	96	72
	8x8	0.52	0.52	9	0.51	0.51	8	3x5	0.70	0.85	12	0.87	0.87	9	0.70	0.70	10	3x5	1.01	1.01	12	8.5	96	72

** Unless otherwise indicated.

FABRICATION NOTES:
1. Maximum spacing of reinforcement is 8".
2. At manufacturer's option, provide cast or cored holes or thin wall panels (KO) to the maximum diameter shown for each. When no penetration is required, it is acceptable to provide a wall with no sectional reduction.

GENERAL NOTES:
1. Precast Junction Box consists of base slab, base unit, risers (as required), and below grade slab. See sheet PJB for details.
2. Precast Base consists of base slab, base unit, risers (as required), reducing slab (as required), and reduced risers (as required). See sheet PB for details.
3. Min Height shown is for stock base units. Use stock base units whenever practical. Smaller height base units can be used in special installation circumstances, when noted elsewhere in the plans. Absolute minimum height of base units is 2'-6".

HL93 LOADING

Texas Department of Transportation

Bridge Division Standard

DESIGN DATA FOR PRECAST BASE AND JUNCTION BOX

PDD

FILE: prestd10-20.dgn	DN: TxDOT	CK: TxDOT	DW: TxDOT	CK: TxDOT
©TxDOT February 2020	CONT	SECT	JOB	HIGHWAY
REVISIONS	0055	15	072	US 84
	DIST	COUNTY		SHEET NO.
	WAC	MCLENNAN		219A

DISCLAIMER:
The use of this standard is governed by the "Texas Engineering Practice Act". No warranty of any kind is made by TxDOT for any purpose whatsoever. TxDOT assumes no responsibility for the conversion of this standard to other formats or for incorrect results or damages resulting from its use.

DATE: 12/21/2020 11:21:08 PM
FILE: c:\pwworking\khq\pwprod\seth.rutledge\d0101353\prestd10-20.dgn

DISCLAIMER:
The use of this standard is governed by the "Texas Engineering Practice Act". No warranty of any kind is made by TxDOT for any purpose whatsoever. TxDOT assumes no responsibility for the conversion of this standard to other formats or for incorrect results or damages resulting from its use.

DATE: 12/21/2020 1:19:43 PM
FILE: c:\pwworking\khq\pwprod\seth.rutledge\d0101353\pwstde01-20.dgn

TABLE OF DIMENSIONS AND REINFORCING STEEL
(Wings for one structure end)

Dimensions					Variable Reinforcing				Estimated Quantities per ft of wing (2–wings) (4)		Estimated Quantities per ft of Toewall (1–toewall)	
					Bars J1		Bars J2					
Maximum Wingwall Height Hw	W	X	Y	Z	Size	Spa	Size	Spa	Reinf (Lb/Ft)	Conc (CY/Ft)	Reinf (Lb/Ft)	Conc (CY/Ft)
2'–6"	2'–10"	10"	1'–0"	7"	#4	1'–0"	#4	1'–0"	48.64	0.406	6.85	0.071
2'–9"	2'–10"	10"	1'–0"	7"	#4	1'–0"	#4	1'–0"	49.31	0.424	6.85	0.071
3'–0"	2'–10"	10"	1'–0"	7"	#4	1'–0"	#4	1'–0"	49.98	0.444	6.85	0.071
3'–3"	2'–10"	10"	1'–0"	7"	#4	1'–0"	#4	1'–0"	53.32	0.462	6.85	0.071
3'–6"	2'–10"	10"	1'–0"	7"	#4	1'–0"	#4	1'–0"	53.98	0.480	6.85	0.071
4'–0"	3'–2"	1'–2"	1'–0"	7"	#4	1'–0"	#4	1'–0"	55.77	0.532	6.85	0.071
4'–6"	3'–2"	1'–2"	1'–0"	7"	#4	1'–0"	#4	1'–0"	59.77	0.568	6.85	0.071
5'–0"	3'–9"	1'–7"	1'–2"	7"	#4	1'–0"	#4	1'–0"	63.45	0.632	6.96	0.075
5'–6"	3'–9"	1'–7"	1'–2"	7"	#4	1'–0"	#4	1'–0"	67.46	0.668	6.96	0.075
6'–0"	4'–4"	2'–0"	1'–4"	7"	#5	1'–0"	#5	1'–0"	80.67	0.730	7.07	0.078
6'–6"	4'–4"	2'–0"	1'–4"	7"	#5	1'–0"	#5	1'–0"	85.05	0.768	7.07	0.078
7'–0"	5'–0"	2'–3"	1'–9"	8"	#5	1'–0"	#5	1'–0"	92.15	0.864	8.07	0.093
7'–6"	5'–0"	2'–3"	1'–9"	8"	#5	1'–0"	#5	1'–0"	96.54	0.902	8.07	0.093
8'–0"	5'–6"	2'–8"	1'–10"	8"	#5	6"	#5	6"	139.04	0.962	8.13	0.095
8'–6"	5'–6"	2'–8"	1'–10"	8"	#5	6"	#5	6"	144.47	1.000	8.13	0.095
9'–6"	6'–0"	2'–10"	2'–2"	9"	#5	6"	#5	6"	156.93	1.136	8.41	0.110
10'–6"	6'–5"	3'–0"	2'–5"	9"	#6	6"	#5	6"	196.27	1.234	8.57	0.117
11'–6"	7'–2"	3'–6"	2'–8"	11"	#6	6"	#6	6"	230.13	1.438	9.52	0.140
12'–6"	7'–8"	3'–9"	2'–11"	1'–0"	#7	6"	#6	6"	283.41	1.592	9.74	0.157
13'–6"	8'–2"	4'–0"	3'–2"	1'–2"	#8	6"	#6	6"	348.72	1.804	10.02	0.186
14'–6"	8'–10"	4'–5"	3'–5"	1'–4"	#9	6"	#6	6"	432.94	2.046	10.30	0.218
15'–6"	9'–6"	4'–10"	3'–8"	1'–6"	#9	6"	#7	6"	489.52	2.302	11.24	0.253
16'–0"	9'–11"	5'–0"	3'–11"	1'–7"	#9	6"	#7	6"	505.72	2.448	11.47	0.279

TABLE OF WINGWALL REINFORCING
(2–wings)

Bar	Size	No.	Spa
D1	#6	~	1'–0"
D2	#6	~	1'–0"
E1	#4	~	1'–0"
F	#4	~	1'–0"
G	#6	~	8"
M1	#4	4	~
P	#4	~	1'–0"
V	#4	~	1'–0"

TABLE OF TOEWALL REINFORCING

Bar	Size	No.	Spa
J3	#4	~	1'–0"
M2	#4	2	~
E2	#4	~	1'–0"

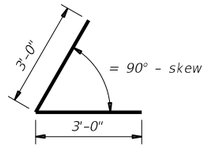

BARS D1

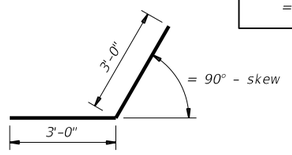

BARS D2

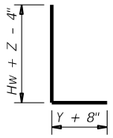

BARS J1

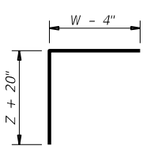

BARS J2

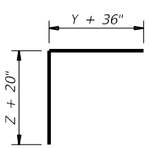

BARS J3

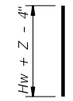

BARS V

WING DIMENSION FORMULAS:
(All values are in feet.)

Hw = H + T + C
Lw = (Hw) (SL) ÷ cosine (θ) for Type PW–1
= (Hw – 1') (SL) ÷ cosine (θ) for Type PW–2 and Hw ≥ 4'
= (Hw – 0.5') (SL) ÷ cosine (θ) for Type PW–2 and Hw < 4'

For cast–in–place culverts:
Ltw = [(N) (S) + (N + 1) (U)] ÷ cosine (θ)

For precast culverts:
Ltw = [(N) (2 U + S) + (N – 1) (0.5')] ÷ cosine (θ)
Total Wingwall Area (two wings ~ SF)
= (2)(Hw)(Lw) for Type PW–1
= (2)(Hw)(Lw) – 6 SF for Type PW–2 and Hw ≥ 4'
= (2)(Hw)(Lw) – 1.5 SF for Type PW–2 and Hw < 4'

Hw = Height of wingwall
Lw = Length of wingwall
Ltw = Culvert toewall length
N = Number of culvert spans
SL:1 = Channel slope ratio. (horizontal: 1 vertical, usual value is 2:1)
θ = Culvert skew

See applicable box culvert standard sheet for S, H, T, and U values.

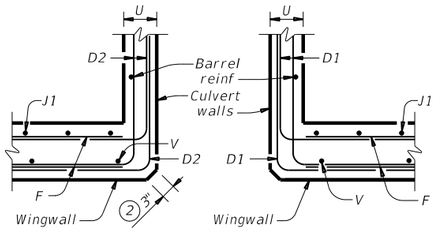

SECTION C-C - PW-1

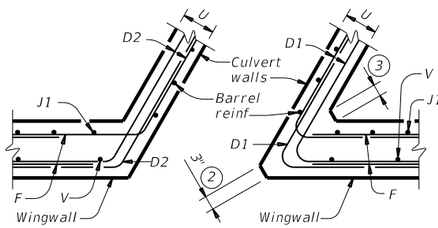

SECTION C-C - PW-2

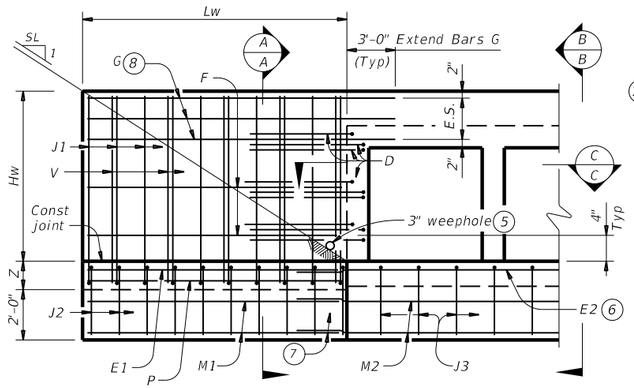

PARTIAL ELEVATION - PW-1

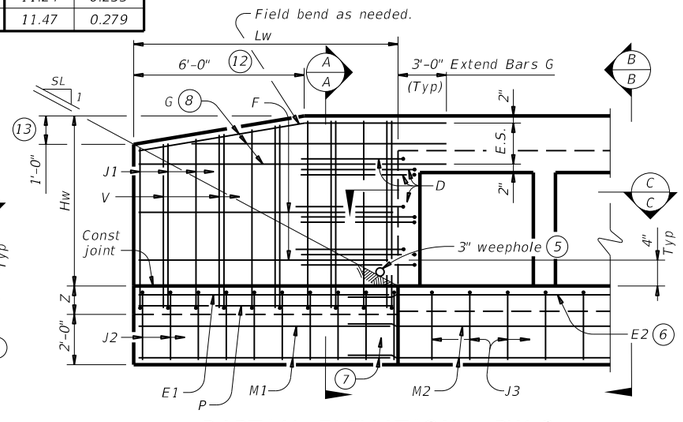

PARTIAL ELEVATION - PW-2

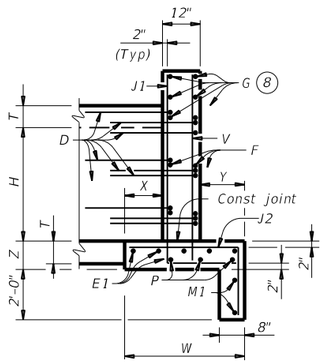

SECTION A-A
(Showing wing reinforcement.)

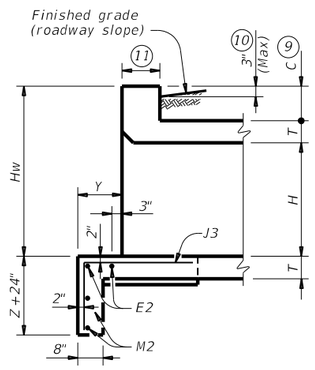

SECTION B-B
(Showing wing reinforcement.)

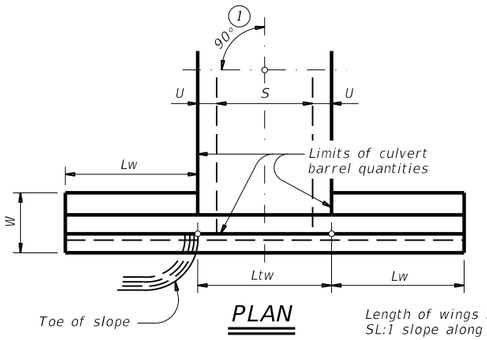

PLAN

DETAILS FOR NON-SKEWED BOX CULVERTS

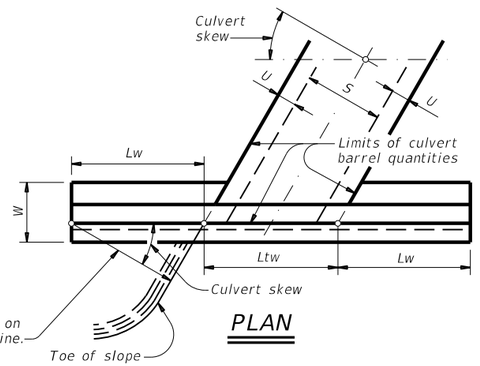

PLAN

DETAILS FOR SKEWED BOX CULVERTS
(Showing 30° skew.)

1. Skew = 0°
2. At discharge end, chamfer may be ¾" minimum.
3. For 15° skew ~ 1"
   For 30° skew ~ 2"
   For 45° skew ~ 3"
4. Quantities shown are for two Type PW–1 wings. Adjust concrete volume for Type PW–2 wings. To determine estimated quantities for two wings, multiply the tabulated values by Lw. Quantities shown do not include weight of Bars D.
5. Provide weepholes for Hw = 5'–0" and greater. Fill around weepholes with coarse gravel.
6. Extend Bars E2 1'–6" minimum into the wingwall footing.
7. Lap Bars M1 1'–6" minimum with Bars M2.
8. Place Bars G as shown, equally spaced at 8" maximum. Provide at least two pairs of Bars G per wing.
9. 0" Min to 5'–0" Max. Estimated curb heights are shown elsewhere in the plans. For structures with pedestrian rail or curbs taller than 1'–0, refer to the Extended Curb Details (ECD) standard sheet. For structures with T631 or T631LS bridge rail, refer to the Mounting Details for T631 & T631LS Rails (T631–CM) standard sheet. Refer to the Box Culvert Rail Mounting Details (RAC) standard sheet for structures with bridge rail other than T631 or T631LS.
10. For vehicle safety, the following requirements must be met:
    - For structures without bridge rail, construct curbs no more than 3" above finished grade.
    - For structures with bridge rail, construct curbs flush with finished grade.

    Reduce curb heights, if necessary, to meet the above requirements. No changes will be made in quantities and no additional compensation will be allowed for this work.
11. 1'–0" typical. 2'–3" when the Box Culvert Rail Mounting Details (RAC) standard sheet is referred to elswhere in the plans.
12. 3'–0" for Hw < 4'.
13. 6" for Hw < 4'.

DESIGNER NOTES:
Type PW–1 can be used for all applications and must be used if railing is to be mounted to the wingwall.
Type PW–2 can only be used for applications without a railing mounted to the wingwall.

MATERIAL NOTES:
Provide Class C concrete (f'c=3,600 psi).
Provide Grade 60 reinforcing steel.
Provide galvanized reinforing steel if required elsewhere in the plans.

GENERAL NOTES:
Designed in accordance with AASHTO LRFD Bridge Design Specifications.
Depth of toewalls for wingwalls and culverts may be reduced or eliminated when founded on solid rock, when directed by the Engineer.
See Box Culvert Supplement (BCS) standard sheet for wingwall type and additional dimensions and information.
Quantities for concrete and reinforcing steel resulting from the formulas given on this sheet are for the Contractor's information only.

Cover dimensions are clear dimensions, unless noted otherwise. Reinforcing dimensions are out–to–out of bars.

Texas Department of Transportation
Bridge Division Standard

CONCRETE WINGWALLS
WITH PARALLEL WINGS FOR BOX CULVERTS
TYPES PW-1 AND PW-2

PW

FILE: pwstde01-20.dgn	DN: GAF	CK: CAT	DW: TxDOT	CK: TxDOT
©TxDOT February 2020	CONT	SECT	JOB	HIGHWAY
REVISIONS	0055	15	072	US 84
	DIST	COUNTY		SHEET NO.
	WAC	MCLENNAN		220

DISCLAIMER:
The use of this standard is governed by the "Texas Engineering Practice Act". No warranty of any kind is made by TxDOT for any purpose whatsoever. TxDOT assumes no responsibility for the conversion of this standard to other formats or for incorrect results or damages resulting from its use.

DATE: 12/21/2020 11:21:16 PM
FILE: c:\pwworking\kha\pwprod\seth.rutledge\d0101353\racste01-20.dgn

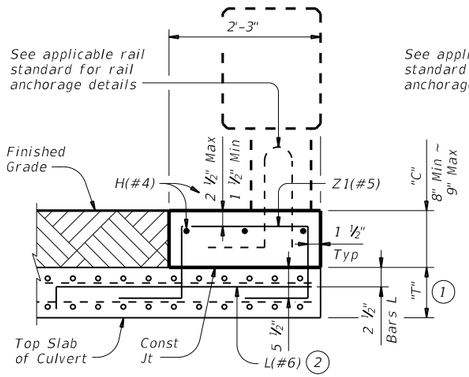

SECTION A-A

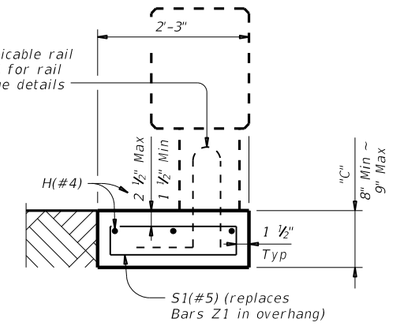

SECTION B-B

TYPE 1 CURB

Used for curbs from 8" to 9" (Showing "C" = 9"). Showing T223 Rail, other rails similar. (Bars L(#5) on T223 and C223 Rails are not used for this structure). Bars RH(#5) required on standards T80HT, T80SS and T224 are not required when used with the RAC standard.

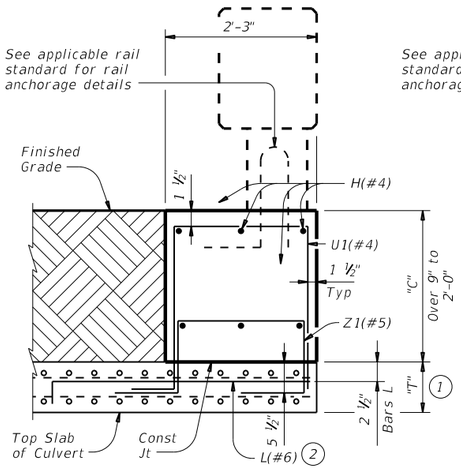

SECTION A-A

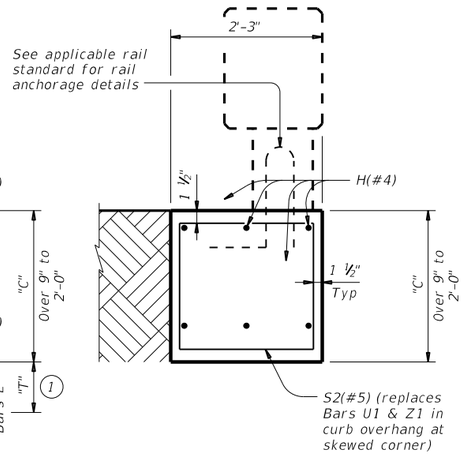

SECTION B-B

TYPE 2 CURB

Used for curbs over 9" to 2'-0" (Showing "C" = 2'-0"). Showing T223 Rail, other rails similar. (Bars L(#5) on T223 and C223 Rails are not used for this structure). Bars RH(#5) required on standards T80HT, T80SS and T224 are not required when used with the RAC standard.

TABLE OF REINFORCING SPACING

Curb Height "C"	Section Type	Bars S, U, & Z Spa
8" to 9"	1	12"
Over 9" to 2'-0"	2	9"
Over 2'-0" to 3'-0"	3	7"
Over 3'-0" to 5'-0"	3	5"

TABLE OF ESTIMATED QUANTITIES (4)

Curb Height "C"	Section Type	Reinf Steel (Lb/LF)	Class "C" Concrete (CY/LF)
8"	1	21.5	0.056
9"	1	21.5	0.063
1'-0"	2	29.7	0.083
1'-6"	2	30.6	0.125
2'-0"	2	31.5	0.167
3'-0"	3	44.6	0.250
4'-0"	3	56.8	0.333
5'-0"	3	60.0	0.417

(1) *"T" is equal to the culvert top slab thickness. For Precast Boxes with slabs less than 8" thick, see SCP-MD Standard for additional details.*

(2) *Tilt Bars L hook as necessary to maintain cover.*

(3) *Optional Bars L are to be used only for Precast Box Culverts with 3'-0" closure pours.*

(4) *Quantities shown are for Contractor's information only. Quantities are per Linear Foot of curb length. The values for each section type in table can be interpolated for intermediate values of Curb Height, "C".*

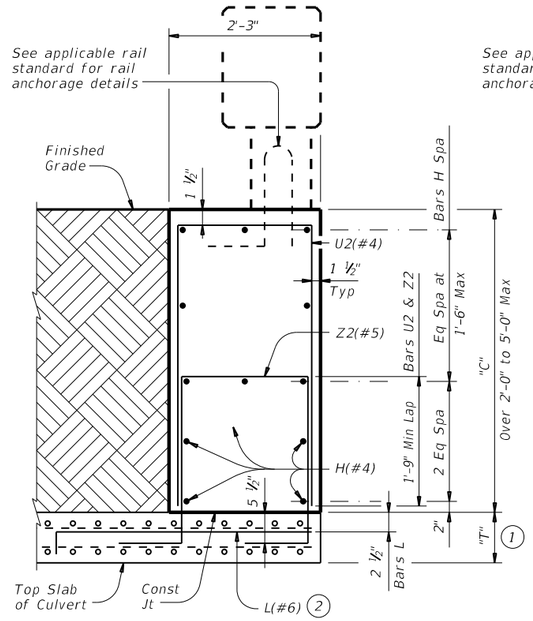

SECTION A-A

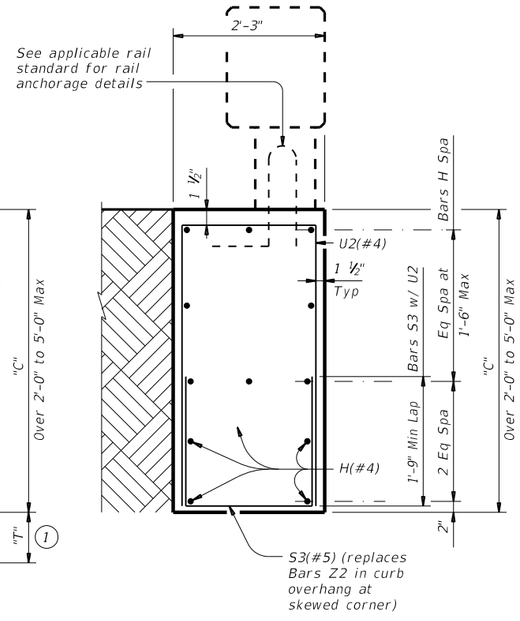

SECTION B-B

TYPE 3 CURB

Used for curbs over 2'-0" to 5'-0" (Showing "C" = 4'-0"). Showing T223 Rail, other rails similar. (Bars L(#5) on T223 and C223 Rails are not used for this structure). Bars RH(#5) required on standards T80HT, T80SS and T224 are not required when used with the RAC standard.

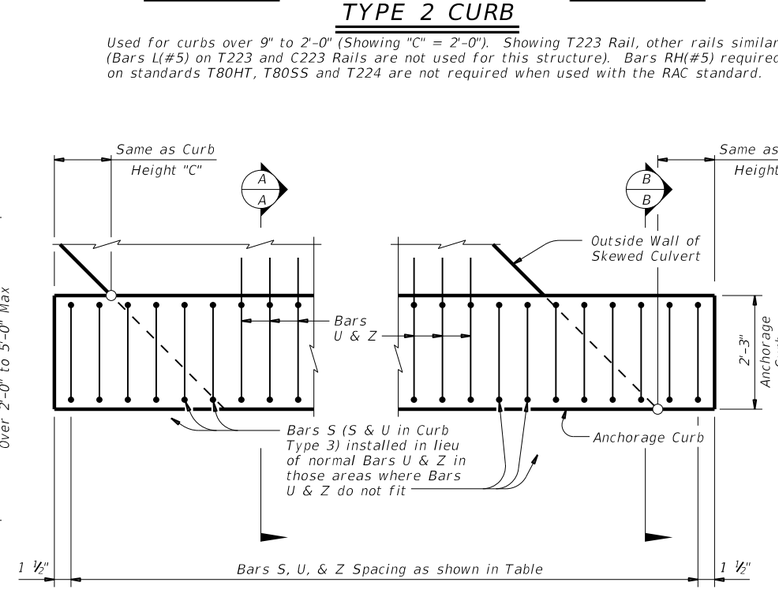

TYPICAL CURB PLAN

Showing typical installation on skewed culvert. (Bars L(#5) on T223 and C223 Rails are not used for this structure). Bars RH(#5) required on standards T80HT, T80SS and T224 are not required when used with the RAC standard.

CONSTRUCTION NOTES:

When using this anchorage curb, omit normal culvert curb reinforcing bars K and H shown on the culvert standard sheets.

For vehicle safety, the top of the curb must be flush with the finished grade.

MATERIAL NOTES:

Provide Grade 60 reinforcing steel.

Galvanize all reinforcing steel if required elsewhere.

Provide bar laps, where required, as follows:
Uncoated or galvanized ~ #4 = 1'-11"

Provide Class "C" concrete (f'c=3,600 psi). Provide Class "C" (HPC) concrete if shown elsewhere in the plans.

GENERAL NOTES:

Designed according to AASHTO LRFD Bridge Design Specifications.

The rail anchorage curb details have sufficient strength for use with all standard rail types.

See appropriate rail standard for approved design speed restrictions, notes and details not shown.

This anchorage curb is considered part of the Box Culvert for payment.

These details are for use with curbs that are 8" to 5'-0" tall only. Curb heights that are less than or greater than those shown will require special design.

Cover dimensions are clear dimensions, unless noted otherwise.
Reinforcing bar dimensions shown are out-to-out of bar.

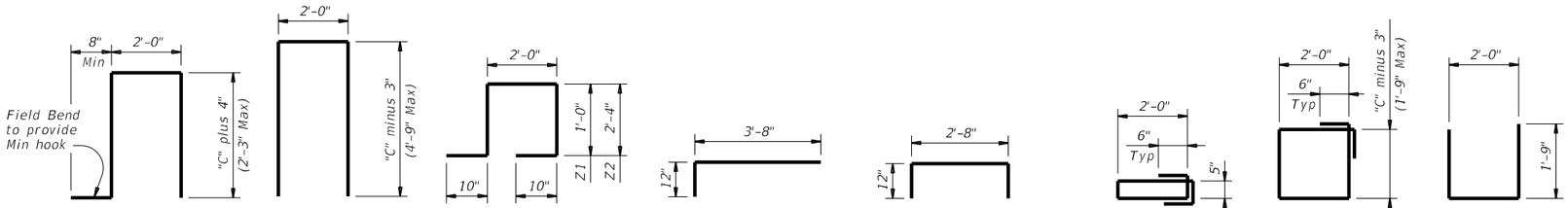

BARS U1 (#4) | BARS U2 (#4) | BARS Z (#5) | BARS L (#6) (2) Spaced at 6" Max | OPTIONAL BARS L (#6) (3) (2) Spaced at 6" Max | BARS S1 (#5) | BARS S2 (#5) | BARS S3 (#5)

SHEET 1 OF 2

Texas Department of Transportation

Bridge Division Standard

RAIL ANCHORAGE CURB
BOX CULVERT RAIL MOUNTING DETAILS
(CURBS 8" TO 5'-0" TALL ONLY)

RAC

FILE: racste01-20.dgn	DN: GAF	CK: TxDOT	DW: TxDOT	CK: GAF
©TxDOT February 2020	CONT	SECT	JOB	HIGHWAY
REVISIONS	0055	15	072	US 84
	DIST	COUNTY		SHEET NO.
	WAC	MCLENNAN		221

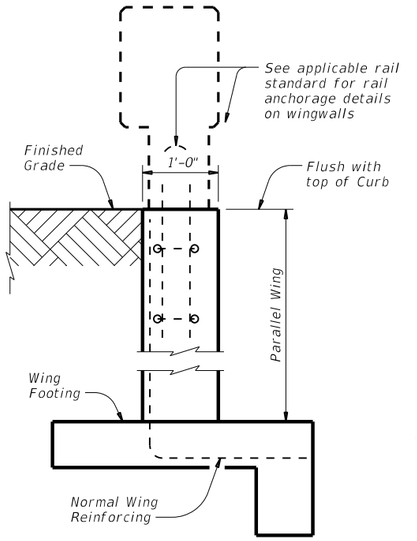

SECTION C-C

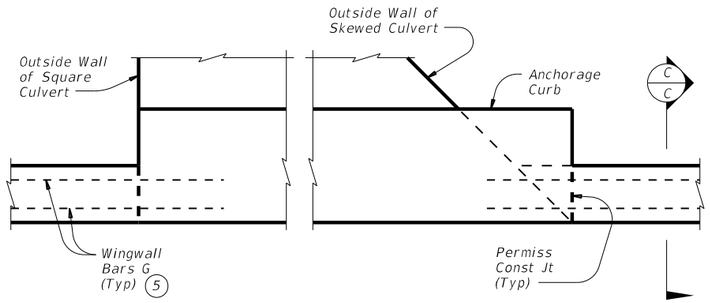

TYPICAL CURB PLAN

Curb reinforcing and footings not shown for clarity

INSTALLATION AT PARALLEL CULVERT WINGWALLS

See culvert wingwall standard for bars and details not shown.

(5) Bars G (#5), as identified on the PARALLEL WINGS PW standard sheet, must extend 1'-6" into the Anchorage Curb similar to that shown for a normal culvert curb.

DISCLAIMER:
The use of this standard is governed by the "Texas Engineering Practice Act". No warranty of any kind is made by TxDOT for any purpose whatsoever. TxDOT assumes no responsibility for the conversion of this standard to other formats or for incorrect results or damages resulting from its use.

DATE: 12/21/2020 11:21:17 PM
FILE: c:\pwworking\khd\pwprod\seth.rutledge\d0101353\racste01-20.dgn

Texas Department of Transportation

Bridge Division Standard

RAIL ANCHORAGE CURB

BOX CULVERT
RAIL MOUNTING DETAILS
(CURBS 8" TO 5'-0" TALL ONLY)

RAC

FILE: racste01-20.dgn	DN: GAF	CK: TxDOT	DW: TxDOT	CK: GAF
©TxDOT February 2020	CONT	SECT	JOB	HIGHWAY
REVISIONS	0055	15	072	US 84
	DIST	COUNTY		SHEET NO.
	WAC	MCLENNAN		222

DISCLAIMER:
The use of this standard is governed by the "Texas Engineering Practice Act". No warranty of any kind is made by TxDOT for any purpose whatsoever. TxDOT assumes no responsibility for the conversion of this standard to other formats or for incorrect results or damages resulting from its use.

DATE: 12/21/2020 3:09:11 PM
FILE: c:\pworking\khd\pwprod\seth.rutledge\d0101353\psetrpss-20.dgn

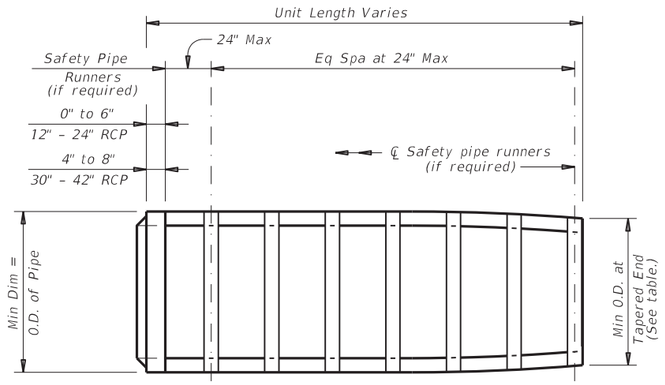

PLAN VIEW – 12" THRU 24"

(Showing spigot end connection.)

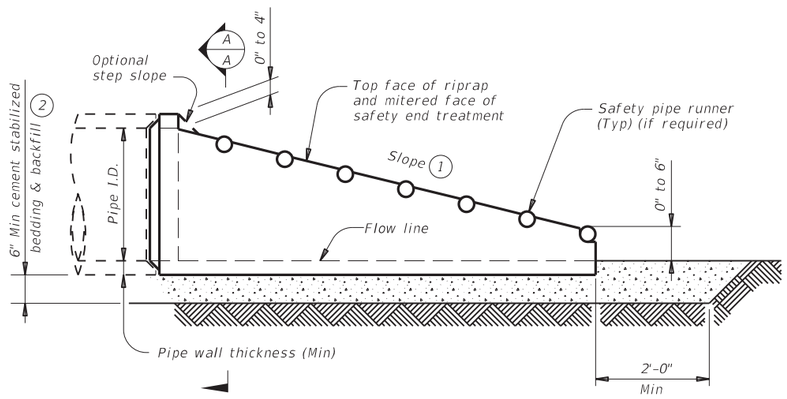

LONGITUDINAL ELEVATION - 12" THRU 24"

(Showing spigot end connection.)

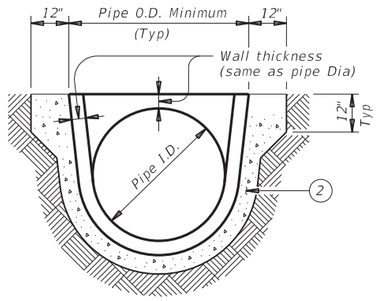

SECTION A-A

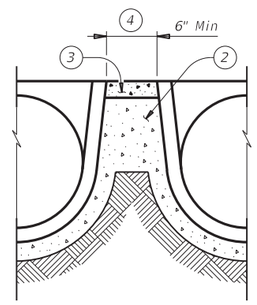

MULTIPLE PIPE INSTALLATION

(1) Slope as shown elsewhere in the plans. Slope of 6:1 or flatter is required for vehicle safety.

Provide cement stabilized bedding and backfill in accordance with the Item, "Excavation and Backfill for Structures". Bedding and backfill is considered subsidiary to the Item 467, "Safety End Treatment". When concrete riprap is specified around the safety end treatment, backfill as directed by Engineer.

(3) Fill the top 4" of void between precast end treatments with concrete riprap. Concrete riprap is considered subsidiary to the Item 467, "Safety End Treatment".

(4) Adjust clear distance between pipes to provide for the minimum distance between safety end treatments.

(5) Safety pipe runners are required for multiple pipe culverts with more than two pipes.

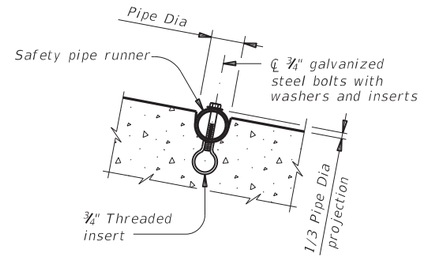

INSTALLATION DETAIL FOR SAFETY PIPE RUNNERS

(If required)

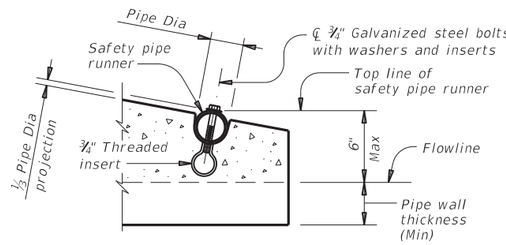

OPTION A

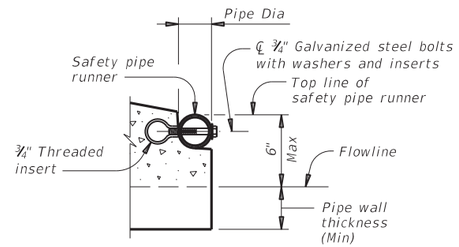

OPTION B

END DETAILS FOR INSTALLATION OF SAFETY PIPE RUNNERS

(If required)

REQUIREMENTS FOR CULVERT PIPES AND SAFETY PIPE RUNNERS

Pipe I.D.	Min Wall Thickness	Min O.D.	Min O.D. at Tapered End	Min Reinf Requirements (sq. in. per ft. of Pipe)	Max Slope	Min Length of Unit	Pipe Runner Requirements		Required Pipe Runner Sizes		
							Single Pipe	Multiple Pipe	Nominal Dia	O.D.	I.D.
12"	2"	16"	16"	0.07 Circ.	6:1	4'–0"	No	(5)	3" STD	3.500"	3.068"
15"	2 ¼"	19 ½"	19"	0.07 Circ.	6:1	5'–8"	No	(5)	3" STD	3.500"	3.068"
18"	2 ½"	23"	21 ½"	0.07 Circ.	6:1	7'–3"	No	(5)	3" STD	3.500"	3.068"
24"	3"	30"	27"	0.07 Circ.	6:1	10'–6"	No	(5)	3" STD	3.500"	3.068"
30"	3 ½"	37"	31"	0.18 Circ.	6:1	12'–1"	No	Yes	4" STD	4.500"	4.026"
36"	4"	44"	36"	0.19 Ellip.	6:1	15'–4"	Yes	Yes	4" STD	4.500"	4.026"
42"	4 ½"	51"	41 ½"	0.23 Ellip.	6:1	18'–7"	Yes	Yes	4" STD	4.500"	4.026"

MATERIAL NOTES:

Synthetic fibers listed on the "Fibers for Concrete" Material Producer List (MPL) may be used in lieu of steel reinforcing in riprap concrete unless noted otherwise.

Provide pipe runners meeting the requirements of ASTM A53 (Type E or S, Gr B), ASTM A500 Gr B, or API 5LX52.

Galvanize steel components except reinforcing steel after fabrication. Repair galvanizing damaged during transport or construction in accordance with the specifications.

GENERAL NOTES:

Precast safety end treatment for reinforced concrete pipe (RCP) may be used for TYPE II end treatment as specified in Item 467, "Safety End Treatment".

When precast safety end treatment is used as a Contractor's alternate to mitered RCP, riprap will not be required unless noted otherwise on the plans.

Manufacture precast concrete end sections in accordance with Item 464, "Reinforced Concrete Pipe" and in accordance with ASTM Specification C-76, Class III, Wall B for circular pipe.

Provide precast concrete end sections with a spigot or bell end for compatibility to upstream or downstream end conditions with sufficient annular space to allow for grout, mortar, cold applied asphalt joint compound or pre-formed plastic gasket material.

Methods of lifting shall be provided by the manufacturer for ease of loading, unloading and installation.

Pipe runners are designed for a traversing load of 10,000 Lbs at yield as recommended by Research Report 280-2F, "Safety Treatment of Roadside Parallel-Drainage Structures", Texas Transportation Institute, March 1981.

Texas Department of Transportation

Bridge Division Standard

PRECAST SAFETY END TREATMENT

TYPE II ~ PARALLEL DRAINAGE

PSET-RP

FILE: psetrpss-20.dgn	DN: RLW	CK: KLR	DW: JTR	CK: GAF
©TxDOT February 2020	CONT	SECT	JOB	HIGHWAY
REVISIONS	0055	15	072	US 84
	DIST	COUNTY		SHEET NO.
	WAC	MCLENNAN		223

DISCLAIMER:
The use of this standard is governed by the "Texas Engineering Practice Act". No warranty of any kind is made by TxDOT for any purpose whatsoever. TxDOT assumes no responsibility for the conversion of this standard to other formats or for incorrect results or damages resulting from its use.

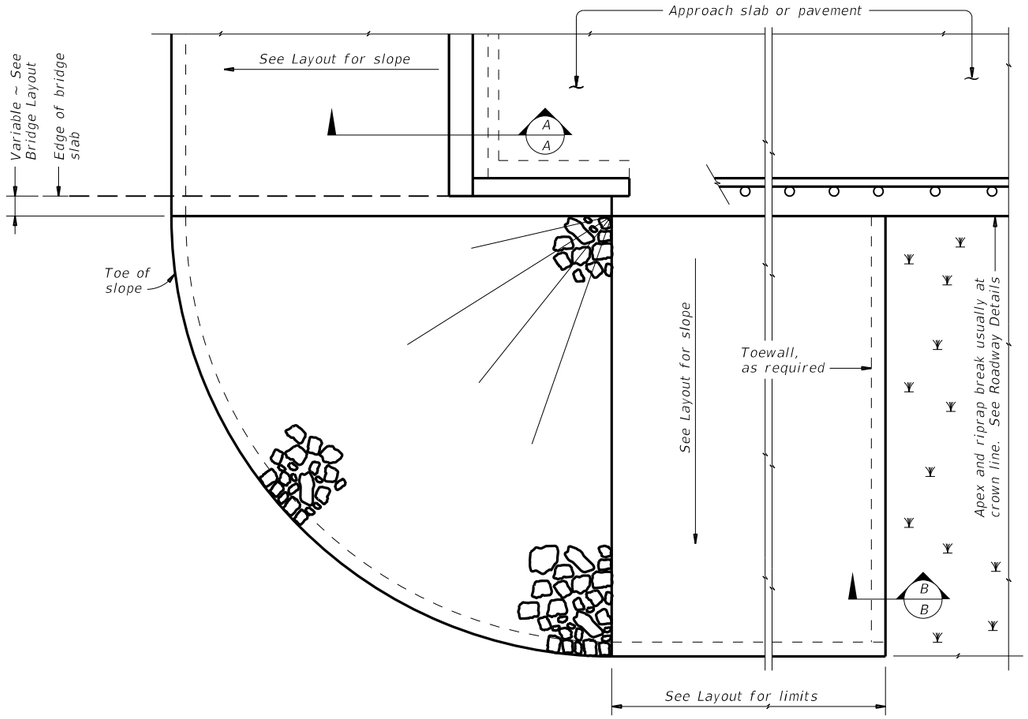

PLAN

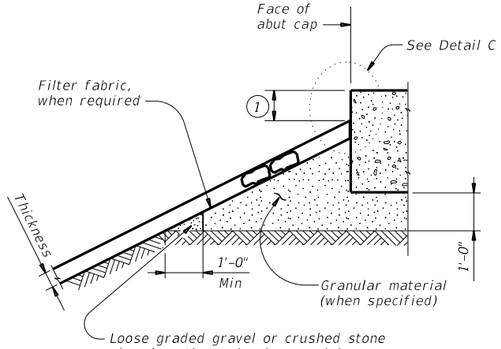

SECTION A-A AT CAP

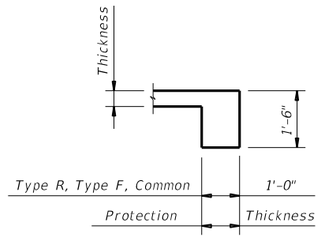

SECTION B-B

Provide toewall when shoulder drain is located adjacent to limits of stone riprap. Omit toewall when thickness of protection riprap is greater than 18".

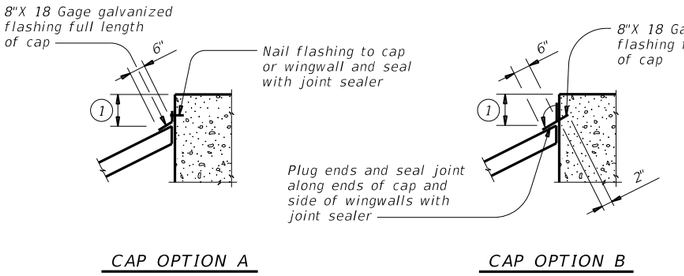

CAP OPTION A

CAP OPTION B

DETAIL C

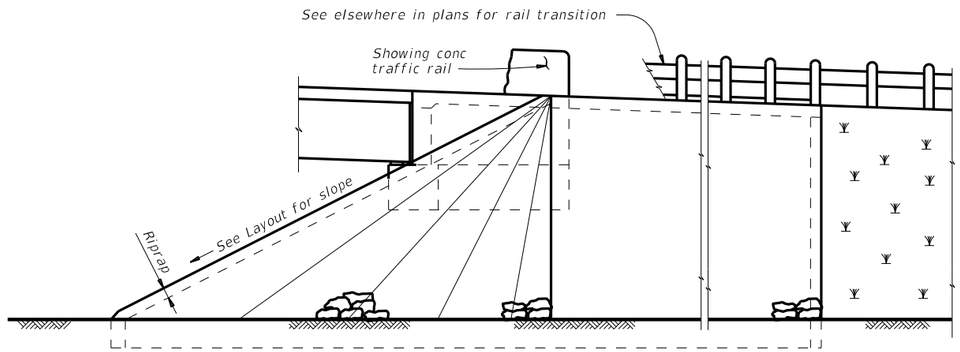

ELEVATION

(1) Top of cap to top of riprap dimension varies as directed by the Engineer. Provide 9" Min for beam/slab type bridges and 1'-6" for slab span, box beam, or slab beam bridges.

GENERAL NOTES:
Refer to Item 432, "Riprap" for stone size and gradation, and construction details. See Layout for limits and thickness of riprap specified.
See elsewhere in plans for locations and details of shoulder drains.

SHEET 1 OF 2

Texas Department of Transportation

Bridge Division Standard

STONE RIPRAP

SRR

FILE: srrstde1-19.dgn	DN: AES	CK: JGD	DW: BWH	CK: AES
©TxDOT April 2019	CONT	SECT	JOB	HIGHWAY
REVISIONS	0055	15	072	US 84
	DIST	COUNTY		SHEET NO.
	WAC	MCLENNAN		224

DATE: 12/21/2020 11:21:24 PM
FILE: c:\pwworking\khd\pwprod\seth.rutledge\d0101353\srrstde1-19.dgn

DISCLAIMER:
The use of this standard is governed by the "Texas Engineering Practice Act". No warranty of any kind is made by TxDOT for any purpose whatsoever. TxDOT assumes no responsibility for the conversion of this standard to other formats or for incorrect results or damages resulting from its use.

DATE: 12/21/2020 11:21:28 PM
FILE: c:\pworking\kha\pwprod\seth.rutledge\d0101353\rlstd013-19.dgn

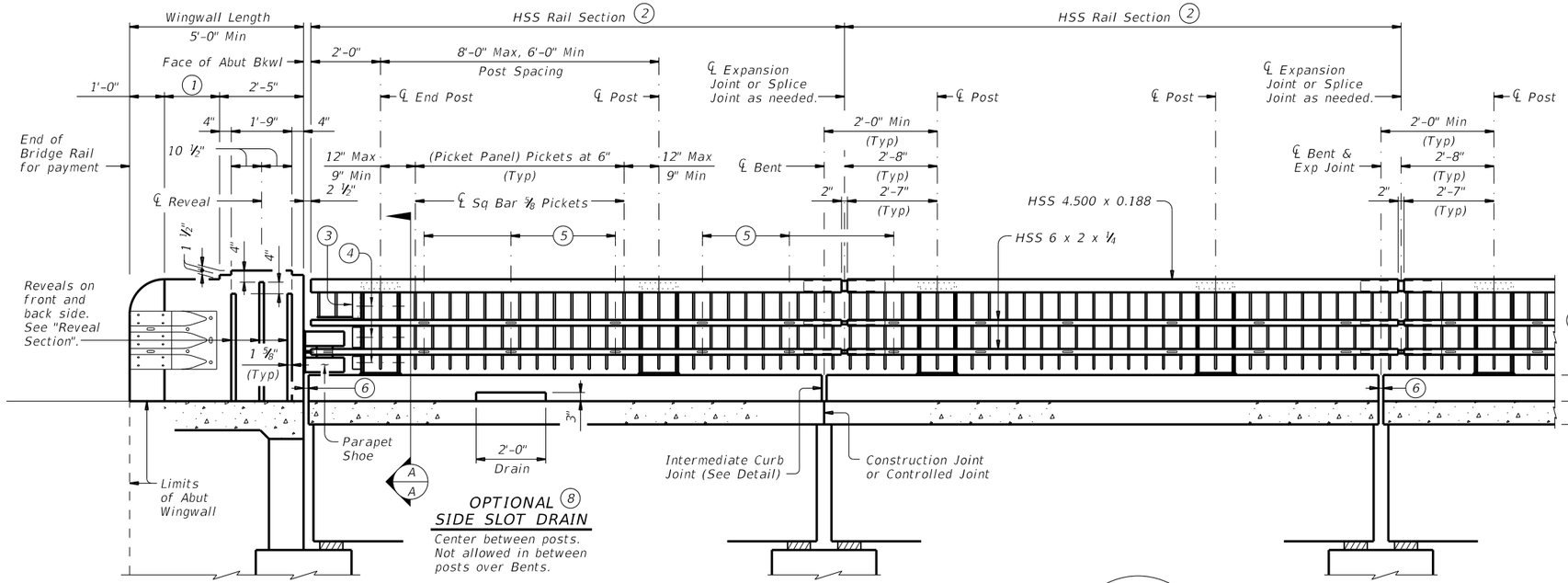

AT ABUTMENTS

AT BENTS WITHOUT SLAB EXP JOINTS

AT BENTS WITH SLAB EXP JOINTS

OPTIONAL (8) SIDE SLOT DRAIN

Center between posts. Not allowed in between posts over Bents.

ROADWAY ELEVATION OF RAIL

Showing combination rail without raised sidewalk.

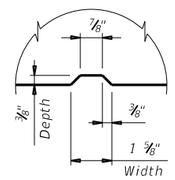

REVEAL SECTION

(Showing reveal dimensions)

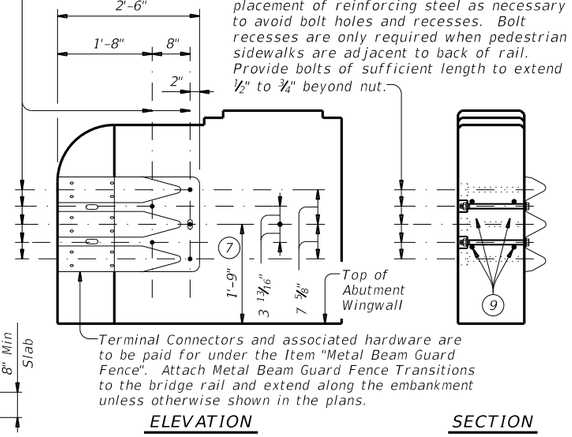

ELEVATION SECTION

TERMINAL CONNECTION DETAILS

Reveals not shown for clarity.

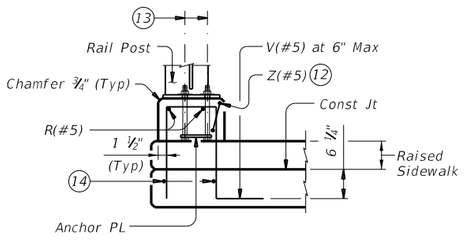

SECTION THRU RAIL WITH RAISED SIDEWALK

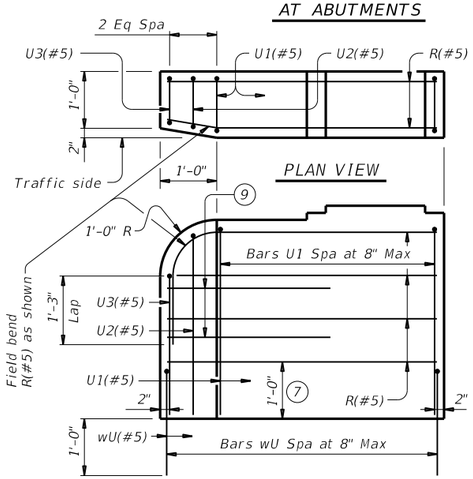

AT ABUTMENT WINGWALLS OR CIP RETAINING WALLS

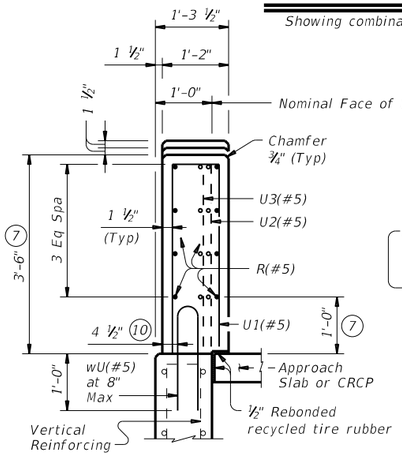

SECTION AT ABUTMENT WINGWALLS OR CIP RETAINING WALLS

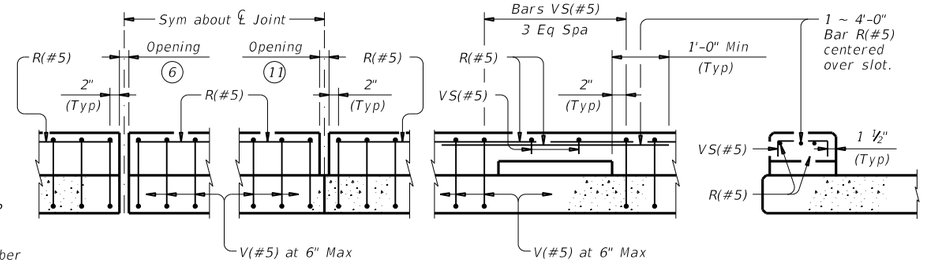

AT BENTS WITH SLAB EXPANSION JOINTS

AT BENTS WITHOUT SLAB EXPANSION JOINTS

AT OPTIONAL DRAIN

SECTION AT OPTIONAL DRAIN

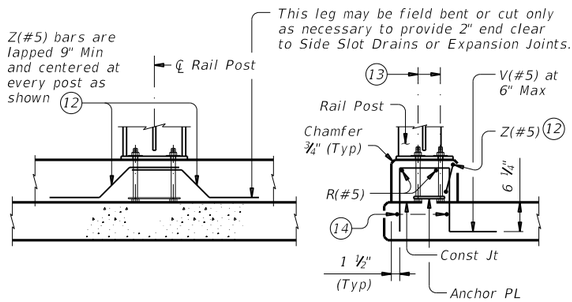

AT POST

SECTION AT POST

Bars V and R omitted for clarity.

ELEVATION SHOWING TYPICAL REINFORCING PLACEMENT WITHOUT RAISED SIDEWALK

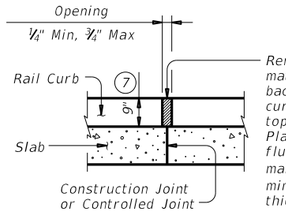

INTERMEDIATE CURB JOINT DETAIL

Showing without raised sidewalk. Provide at all interior bents without slab expansion joints.

(1) Wingwall length minus 3'-5" (Variable) 1'-7" Min.

(2) HSS rail sections must have at least two posts but not more than four.

(3) See "Picket End Panel Detail".

(4) ℄ Bolt locations for attaching picket end panel to end post.

(5) ℄ Bolt locations for attaching picket panel to back of HSS 6 x 2 x ¼. See "Section M-M".

(6) Same as slab joint opening. (5" Max Expansion Joint)

(7) Increase 2" for structures with overlay.

(8) Drains may be used where shown elsewhere on the plans or as directed by the Engineer. Do not place drains over railroad tracks, lower roadways, or sidewalks. When this rail is used as a separator between a roadway and a sidewalk, side slot drains are not permitted.

(9) Place 4 additional Bars R(#5) 3'-8" in length inside Bars U(#5) and centered 2'-0" from end of rail when Terminal Connections are required. Field bend as needed.

(10) 5 ¼" when vertical reinforcing has closer clear cover over horizontal reinforcing in abutment wingwalls or retaining walls on traffic side of wall.

(11) ¼" Min, ¾" Max.

(12) Adjust Bars Z(#5) as necessary to avoid Bars V(#5).

(13) ℄ ⅞" Dia Anchor Bolts. See "Anchor Bolt Assembly Details".

(14) Top longitudinal slab bar may be adjusted laterally 3" plus or minus to tie reinforcing.

SHEET 1 OF 4

Texas Department of Transportation

Bridge Division Standard

COMBINATION RAIL

TYPE C2P

FILE: rlstd013-19.dgn	DN: TxDOT	CK: TAR	DW: JTR	CK: TAR
©TxDOT September 2019	CONT	SECT	JOB	HIGHWAY
REVISIONS	0055	15	072	US 84
	DIST	COUNTY		SHEET NO.
	WAC	MCLENNAN		225

DISCLAIMER:
The use of this standard is governed by the "Texas Engineering Practice Act". No warranty of any kind is made by TxDOT for any purpose whatsoever. TxDOT assumes no responsibility for the conversion of this standard to other formats or for incorrect results or damages resulting from its use.

DATE: 12/21/2020 11:21:29 PM
FILE: c:\pwworking\khq\pwprod\seth.rutledge\d0101353\rlstd013-19.dgn

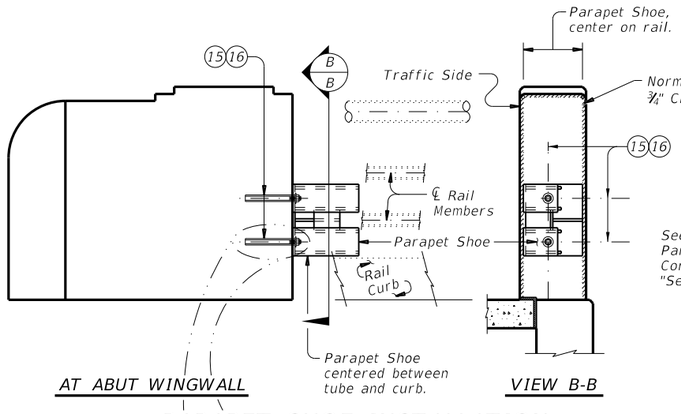

PARAPET SHOE INSTALLATION

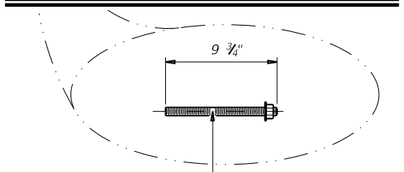

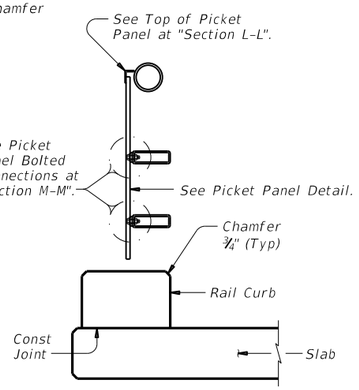

SECTION THRU BRIDGE RAIL IN BETWEEN POSTS

Reinforcing steel not shown for clarity.
Shown without raised sidewalk.

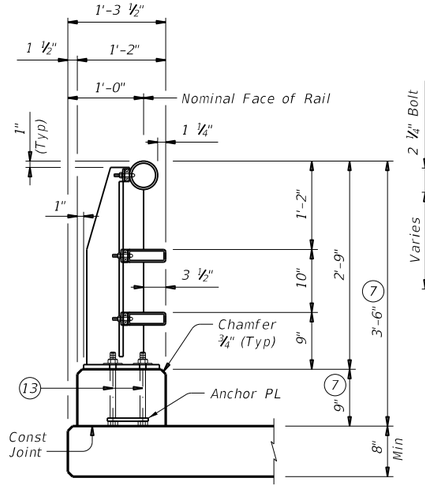

SECTION THRU BRIDGE RAIL AT POST

Reinforcing steel not shown for clarity.
Shown without raised sidewalk.

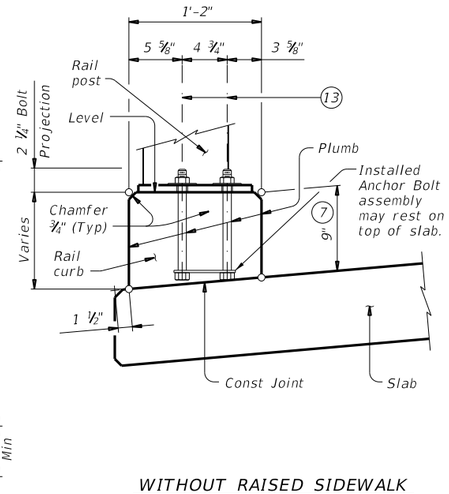

WITHOUT RAISED SIDEWALK

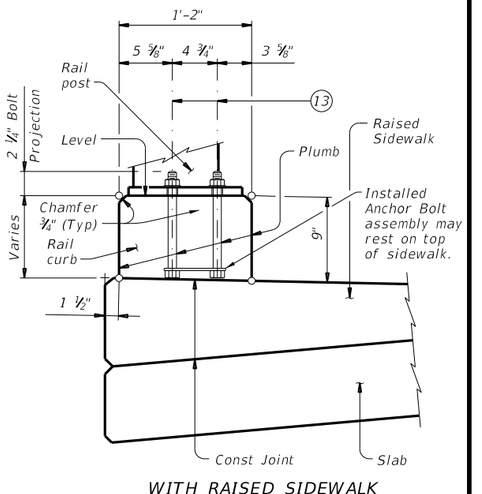

WITH RAISED SIDEWALK

RAIL CURB FORMING DETAIL

Reinforcing steel not shown for clarity.

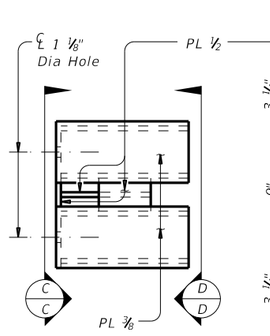

PARAPET SHOE

Parapet Shoe weight = 78 lb each, for contractor's information only.

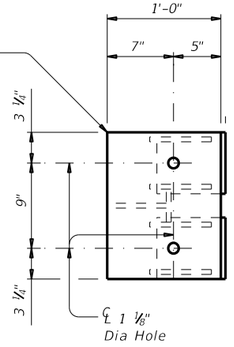

VIEW C-C

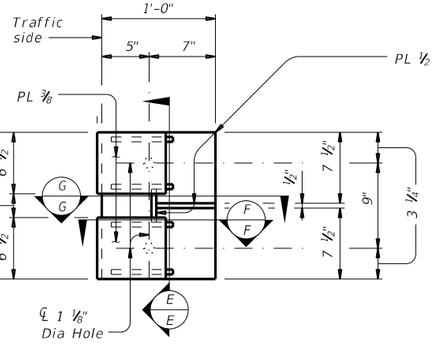

VIEW D-D

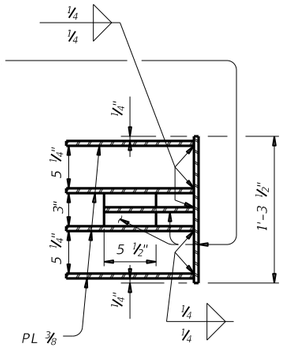

SECTION E-E

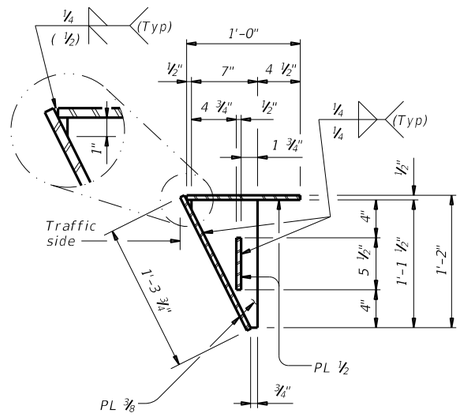

SECTION F-F

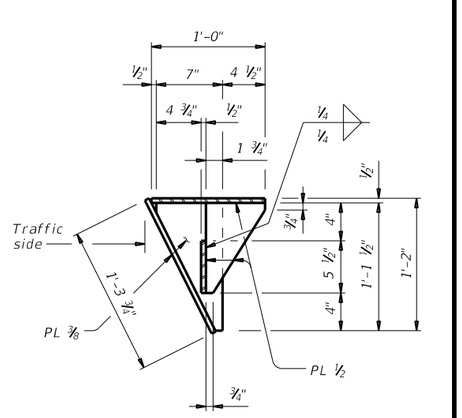

SECTION G-G

(7) Increase 2" for structures with overlay.

(13) ℄ ⅞" Dia Anchor Bolts. See "Anchor Bolt Assembly Details".

(15) Anchor bolts must be ⅞" Dia ASTM A193 Gr B7 or F1554 Gr 105 fully threaded rods with heavy hex nuts and one hardened steel washer (ASTM F436) each. Nuts must conform to ASTM A563 requirements. Embed fully threaded rods into parapet wall with a Type III, Class C, D, E, or F anchor adhesive. Adesive anchor embedment depth is 8". Anchor installation, including hole size, drilling, and clean out, must be in accordance with Item 450, "Railing".

(16) Install Parapet Shoe after rail has been placed. To ease installation, temporarily brace parapet shoe until the anchorage system achieves manufacturer's recommended curing time. Anchorage system must be assembled with one hardened steel washer (ASTM F436) and one heavy hex nut (ASTM A563) each. Remove temporary bracing after anchorage systems has been firmly tightened.

(17) Length shown for 6 ¼" Min bar embedment with no overlay. Adjust as required.

(18) Increase 2 ¾" for structures with overlay.

(19) For raised sidewalks, add sidewalk height to total bar height. Use sidewalk height at rail's location.

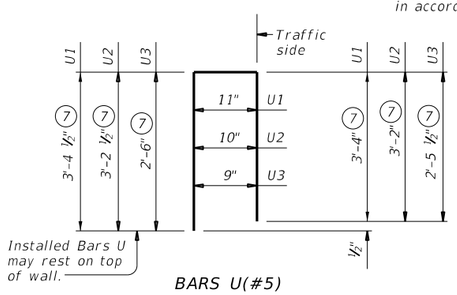

BARS U(#5)

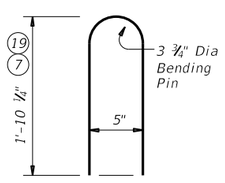

BARS wU(#5)

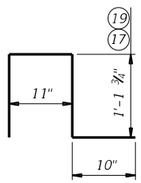

BARS V(#5)

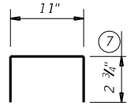

BARS VS(#5)

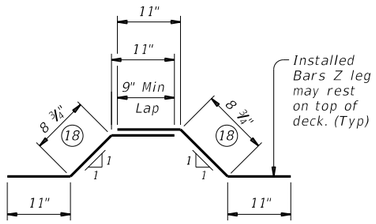

BARS Z(#5)

SHEET 2 OF 4

Texas Department of Transportation

Bridge Division Standard

COMBINATION RAIL

TYPE C2P

FILE: rlstd013-19.dgn	DN: TxDOT	CK: TAR	DW: JTR	CK: TAR
©TxDOT September 2019	CONT	SECT	JOB	HIGHWAY
REVISIONS	0055	15	072	US 84
	DIST	COUNTY		SHEET NO.
	WAC	MCLENNAN		226

DISCLAIMER:
The use of this standard is governed by the "Texas Engineering Practice Act". No warranty of any kind is made by TxDOT for any purpose whatsoever. TxDOT assumes no responsibility for the conversion of this standard to other formats or for incorrect results or damages resulting from its use.

DATE: 12/21/2020 11:21:30 PM
FILE: c:\pwworking\khn\pwprod\seth.rutledge\d0101353\r1std013-19.dgn

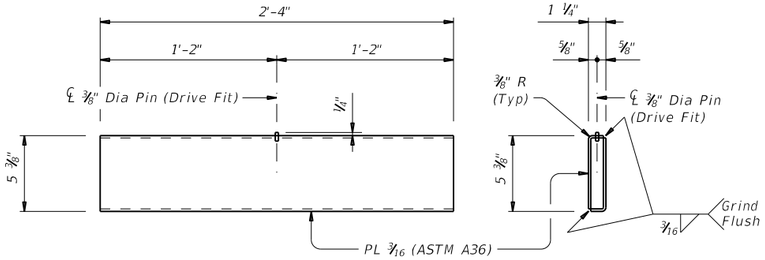

RECTANGULAR SLEEVE MEMBER

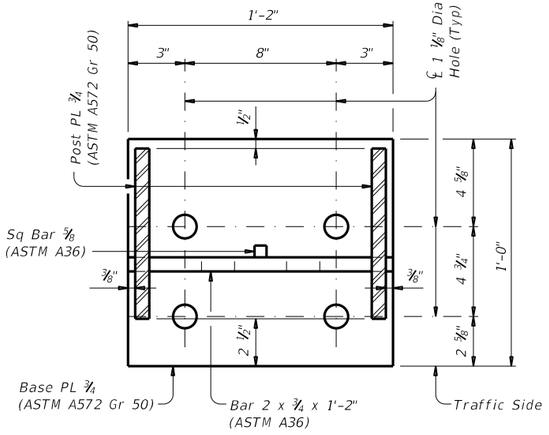

SECTION I-I

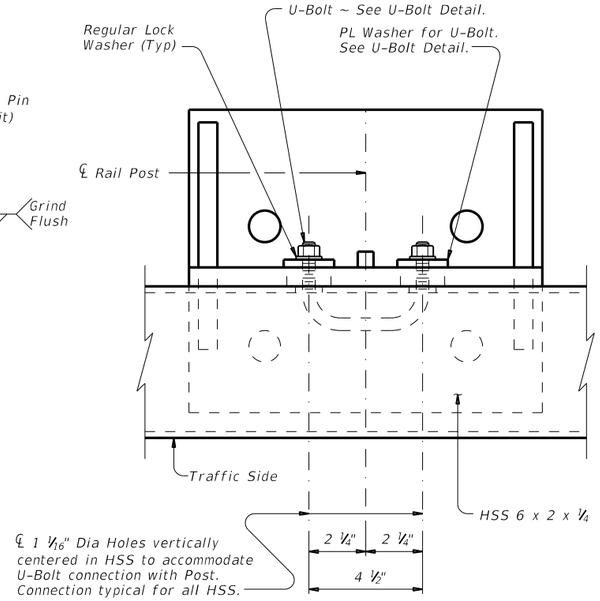

TOP VIEW OF RAIL POST

Showing connection for rail post and HSS 6 x 2 x ¼. HSS 4.5 x 0.188 not shown for clarity. HSS 4.5 x 0.188 connection similar.

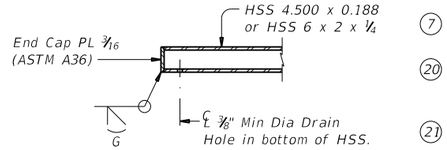

END CAP DETAIL

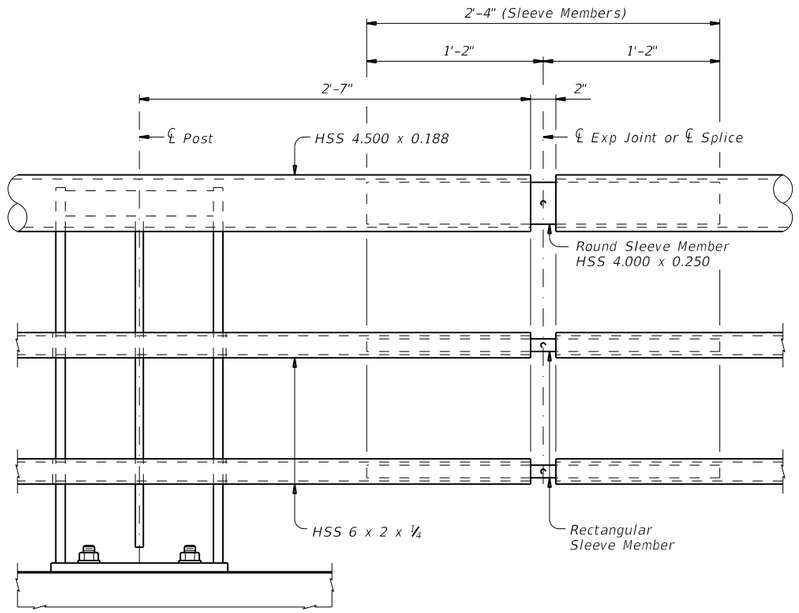

EXPANSION JOINT OR SPLICE

Picket panels not shown for clarity.

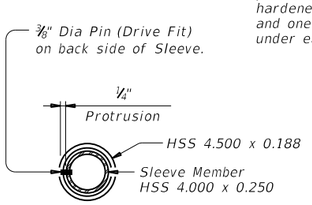

ROUND SLEEVE MEMBER

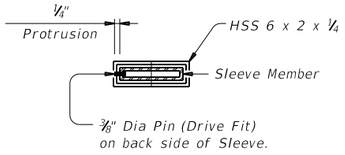

RECTANGULAR SLEEVE MEMBER

SECTIONS THRU SLEEVE MEMBERS

Sections shown at ℄ Exp Jt or ℄ Splice

(7) *Increase 2" for structures with overlay.*

(20) *See "Section A-A" for end post hole placement in each end post PL for picket end panel.*

(21) *℄ 3 ~ ⅝" Dia holes in each end post PL. Attach picket end panel with 3 ~ ½" Dia hex head bolts (ASTM F3125 Gr A325) with one hardened steel washer (ASTM F436) placed under each hex head and one hardened steel washer (ASTM F436) and one regular lock washer placed under each heavy hex nut (ASTM A563).*

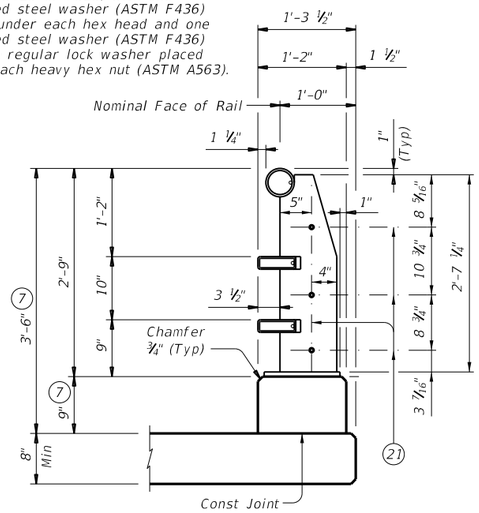

SECTION A-A

Showing end post ⅜" Dia hole placement in each post PL for picket end panel. Shown without raised sidewalk. Reinforcing steel not shown for clarity.

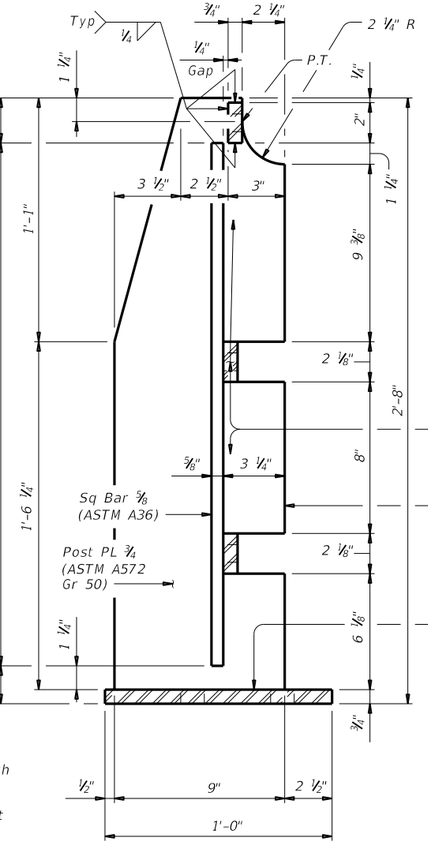

SECTION H-H (20)

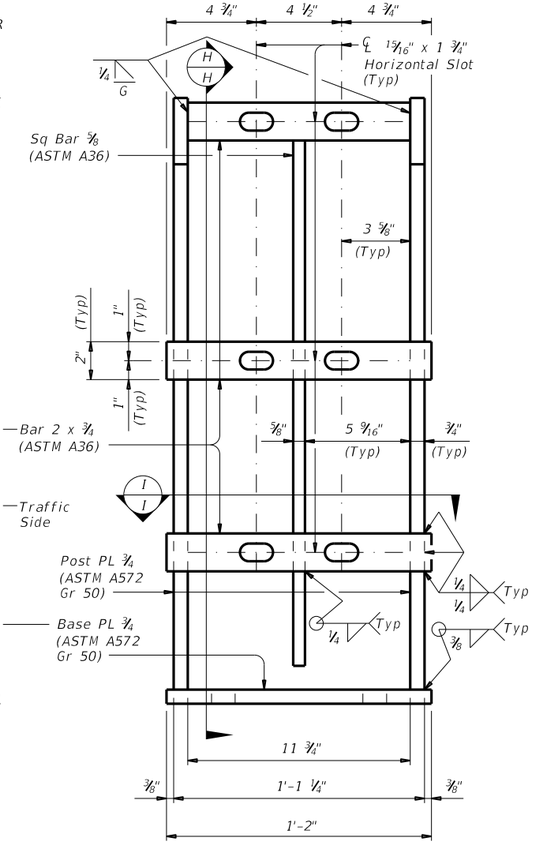

POST DETAIL (20)

Showing Traffic Side of Post

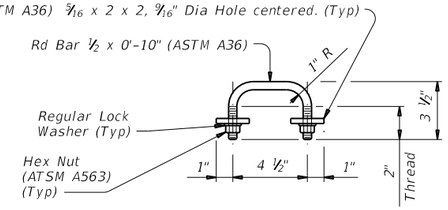

U-BOLT DETAIL

(Showing U-Bolt for rail post and HSS)

Texas Department of Transportation

Bridge Division Standard

COMBINATION RAIL

TYPE C2P

FILE: r1std013-19.dgn	DN: TxDOT	CK: TAR	DW: JTR	CK: TAR
©TxDOT September 2019	CONT	SECT	JOB	HIGHWAY
REVISIONS	0055	15	072	US 84
	DIST	COUNTY		SHEET NO.
	WAC	MCLENNAN		227

DISCLAIMER:
The use of this standard is governed by the "Texas Engineering Practice Act". No warranty of any kind is made by TxDOT for any purpose whatsoever. TxDOT assumes no responsibility for the conversion of this standard to other formats or for incorrect results or damages resulting from its use.

DATE: 12/21/2020 11:21:31 PM
FILE: c:\pwworking\khal\pwprod\seth.rutledge\d0101353\r1std013-19.dgn

(7) Increase 2" for structures with overlay.

(21) ℄ 3 ~ ⅝" Dia holes. Attach picket end panel to end post with 3 ~ ½" Dia heavy hex head bolts (ASTM F3125 Gr A325) with one hardened steel washer (ASTM F436) placed under each hex head and one hardened steel washer (ASTM F436) and one regular lock washer placed under each heavy hex nut (ASTM A563).

(22) ℄ Sq Bar ⅞ (ASTM A36) spaced at 6".

(23) ℄ Bolt locations for attaching picket panel to back of HSS 6 x 2 x ¼. Six ½" Dia heavy hex head bolts (ASTM F3125 Gr A325) with one hardened steel washer (ASTM F436) placed under each hex head and one hardened steel washer (ASTM F436) placed under each heavy hex nut (ASTM A563) required per picket panel. ℄ 9⁄16" x 3 ½" Horizontal Slot in ⅞ x 1 ½ Bar for ½" Dia heavy hex head bolts (ASTM F3125 Gr A325). See "Section M-M".

(24) ℄ Bolt locations at ends of picket panel as shown. See "Roadway Elevation Of Rail".

(25) ℄ Bolt locations for attaching picket panel must always be in next adjacent picket panel bay from end of sleeve members to allow for joint movement, when sleeve members are present.

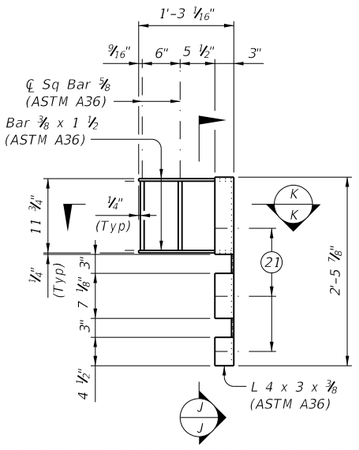

PICKET END PANEL DETAIL

Showing traffic side of picket end panel. Picket end panel is detailed for one side only, other side similar. For other side picket end panel must be built for opposite hand. Picket end panel weight = 27 lb each, for contractor's information only.

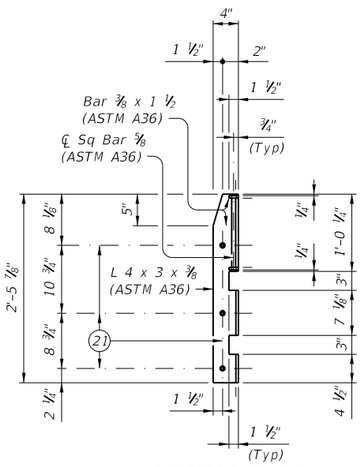

SECTION J-J

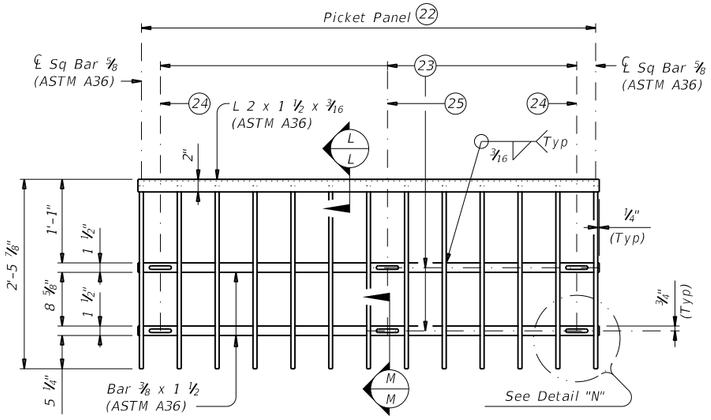

PICKET PANEL DETAIL

Showing field side of picket panel. 6'-0" Max picket panel weight = 70 lb each, for contractor's information only.

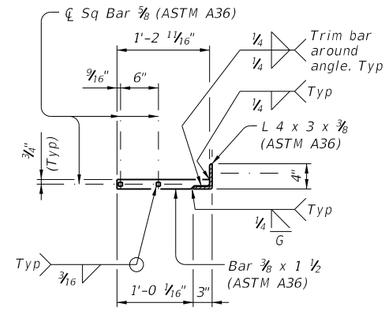

SECTION K-K

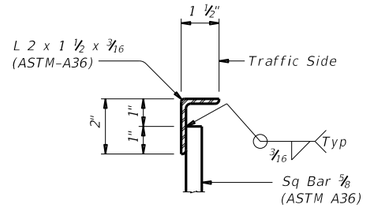

SECTION L-L

CONSTRUCTION NOTES:

The face of tubular sections and rail curb must be plumb unless otherwise approved by the Engineer. Steel posts must be square to the top of curb. Use epoxy mortar under post base plates if gaps larger than 1⁄16" exist.

Bend tubes to required radius for curved rails. Shop drawings for approval are required for curved rails.

One shop splice per rail member section is permitted with minimum 85 percent penetration. The weld may be square groove or single vee groove. Grind smooth.

Cap all ends of HSS at parapet.

Round or chamfer exposed edges of rail members and rail posts to approximately 1⁄16" by grinding.

Chamfer all exposed concrete corners.

MATERIAL NOTES:

Provide ASTM A1085 or A500 Gr B for all HSS.

Provide Grade 60 reinforcing steel.

Epoxy coat or galvanize all reinforcing steel if slab bars are epoxy coated or galvanized.

Galvanize all metal components of steel rail system. Apply additional coatings when shown elsewhere on the plans. When plans require paint over gavanizing, follow the requirements for painting galvanized steel in Item 445, "Galvanizing" and when field painting, Item 446, "Field Cleaning and Painting Steel". Sleeve members and anchor bolts must receive galvanization prior to installation and only field paint after installation unless directed otherwise by Engineer.

Provide ⅞" Dia ASTM F3125 Gr A325 or A449 bolts (or ASTM A193 Gr B7 or F1554 Gr 105 threaded rods with one tack welded heavy hex nut each) with one hardened steel washer (ASTM F436) placed under each heavy hex nut. Nuts must conform to ASTM A563 requirements.

Provide ½" Dia ASTM F3125 Gr A325 hex head bolts with one hardened steel washer (ASTM F436) placed under each hex head and one hardened steel washer (ASTM F436) and one regular lock washer placed under each heavy hex nut (ASTM A563).

Provide ½" Dia round bar U-bolts (ASTM A36) with plate washers (ASTM A36) and regular lock washers placed under hex nuts that conform to ASTM A563 requirements. See "U-Bolt Detail".

Provide Class "S" concrete. When Class "S" concrete for slab is HPC, include a minimum of 3 gallons of calcium nitrite inorganic corrosion inhibitor per cubic yard of Class "S" concrete.

Provide bar laps, where required, as follows:
Uncoated or galvanized ~ #5 = 2'-0"
Epoxy coated ~ #5 = 3'-0"

GENERAL NOTES:

This rail has been successfully evaluated by full-scale crash test to meet MASH TL-4 criteria. This rail can be used for speeds of 50 mph and greater when a TL-3 rated guard fence transition is used. When a TL-2 rated guard fence transition is used, this rail can only be used for speeds of 45 mph and less.

This railing cannot be used on bridges with expansion joints providing more than 5" movement or on cast-in-place retaining walls, unless otherwise noted.

Rail anchorage details shown on this standard may require modification for select structure types. See appropriate details elsewhere in plans for these modifications.

Submit erection drawings showing panel lengths, rail post spacing, and anchor bolt setting, to the Engineer for approval.

Average weight of railing with no overlay:
203 plf total
131 plf (Conc)
72 plf (Steel).

Cover dimensions are clear dimensions, unless noted otherwise.
Reinforcing bar dimensions shown are out-to-out of bar.

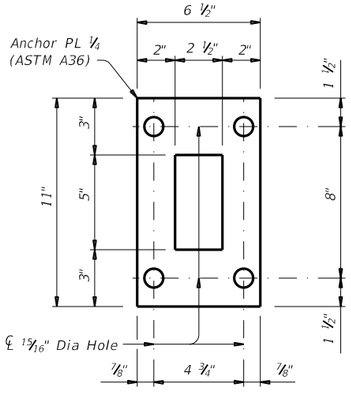

PLAN OF ANCHOR PLATE

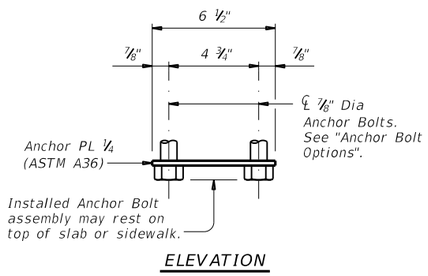

ELEVATION

ANCHOR BOLT ASSEMBLY DETAILS

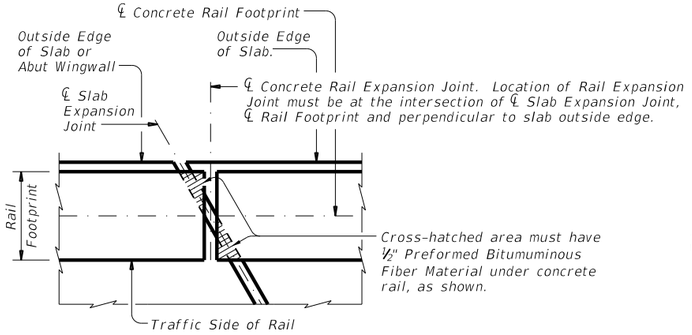

PLAN OF RAIL AT EXPANSION JOINTS

Example showing Slab Expansion Joints without breakbacks.

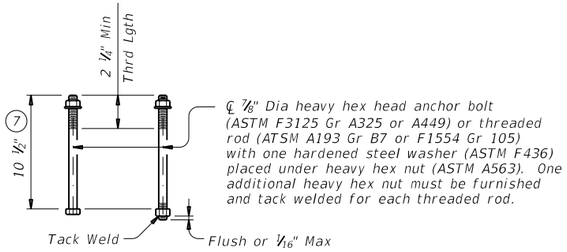

ANCHOR BOLT OPTIONS

(Showing Anchor Bolts for Base Plate)

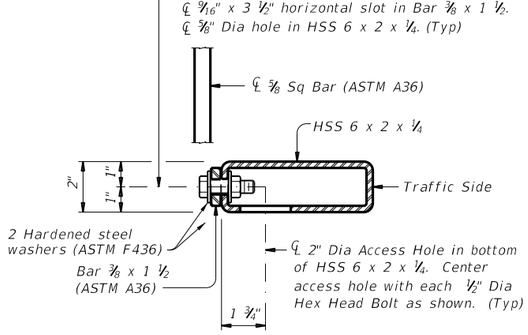

SECTION M-M

Showing Picket Panel connecting to HSS 6 x 2 x ¼. (Typ)

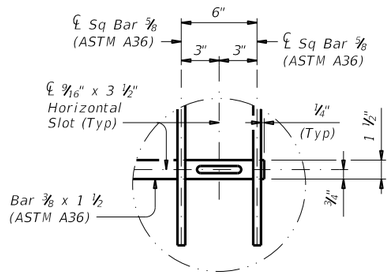

DETAIL "N"

SHEET 4 OF 4

Texas Department of Transportation

Bridge Division Standard

COMBINATION RAIL

TYPE C2P

FILE: r1std013-19.dgn	DN: TxDOT	CK: TAR	DW: JTR	CK: TAR
©TxDOT September 2019	CONT	SECT	JOB	HIGHWAY
REVISIONS	0055	15	072	US 84
	DIST	COUNTY		SHEET NO.
	WAC	MCLENNAN		228

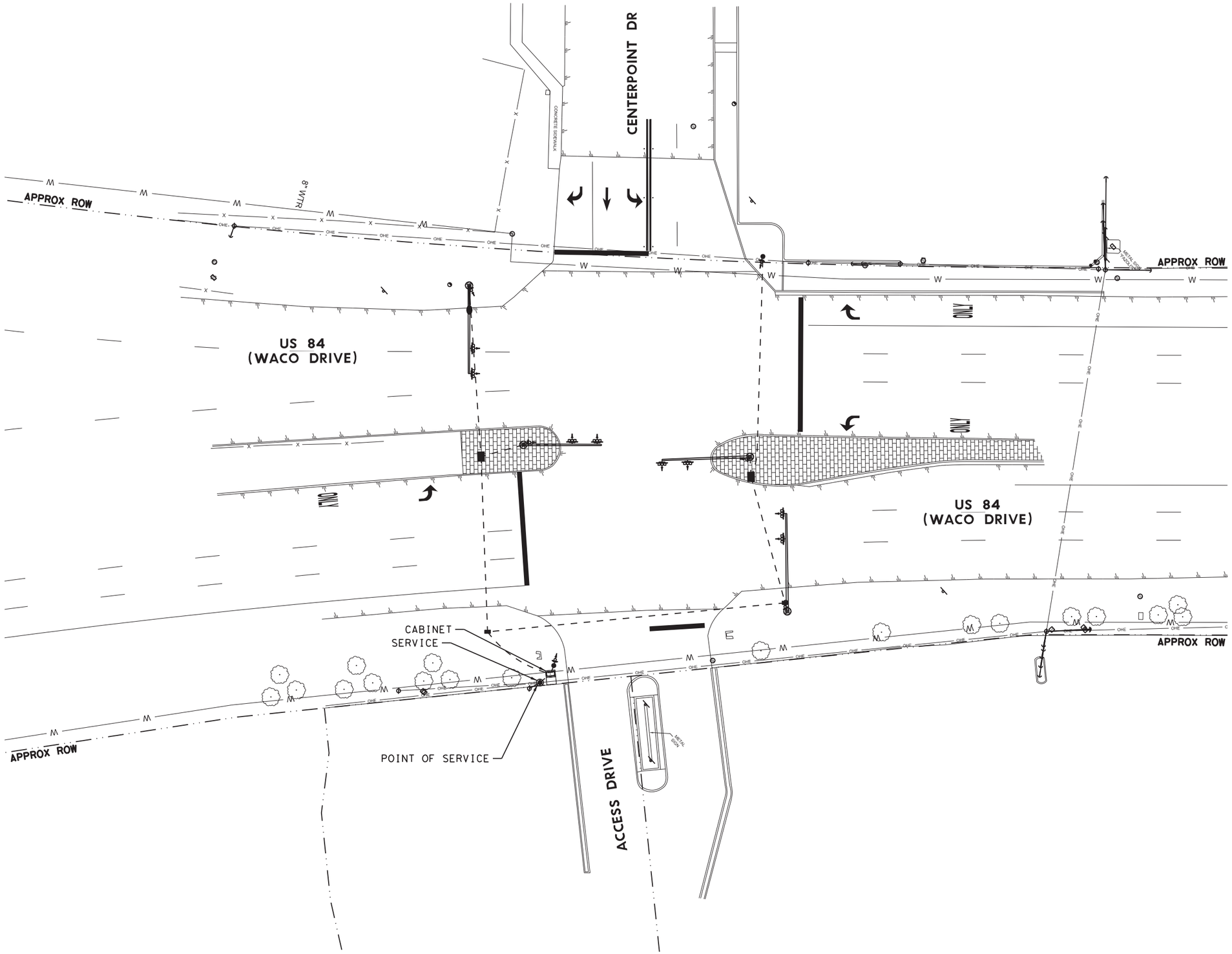

N

0' 20' 40'

LEGEND

- POINT OF SERVICE
- ELECTRICAL SERVICE
- CONDUIT, PVC
- GROUND BOX

NOTES

1. THE LOCATIONS SHOWN AS EXISTING CONDUIT RUNS ARE APPROXIMATE. THE EXACT LOCATION WILL BE DETERMINED IN THE FIELD. NO EXISTING CONDUIT WILL BE USED, SEE PROPOSED TRAFFIC SIGNAL SHEETS.

STATE OF TEXAS
SCOTT R. ARNOLD
96782
LICENSED
PROFESSIONAL ENGINEER

Scott R. Arnold, P.E.
12/21/2020

Kimley»Horn F-928

© 2021

Texas Department of Transportation

CONDITION DIAGRAM

AT CENTERPOINT DRIVE

SHEET 1 OF 5

FED. RD. DIV. NO.	PROJECT ID.	HIGHWAY NO.
6	(SEE TITLE SHEET)	US 84

STATE	DIST.	COUNTY	SHEET NO.
TEXAS	WAC	MCLENNAN	229
CONT.	SECT.	JOB	
0055	15	072	

FILENAME: pw:\\kh-pw.bentley.com:kh-pw-01\Documents\01 Active Projects\TX-FTW-063586010 - US 84 (Waco Drive)\WAC 005515072\4 - Design\Plan Set\8. Traffic\US84_EXCON_CP.dgn
PLOTTED: 12/21/2020

PROPOSED RING AND STRUCTURE

Ø1 OL-B	Ø2 WALK	Ø3 NOT USED	Ø4 WALK
Ø5	Ø6 WALK	Ø7 NOT USED	Ø8 OL-A

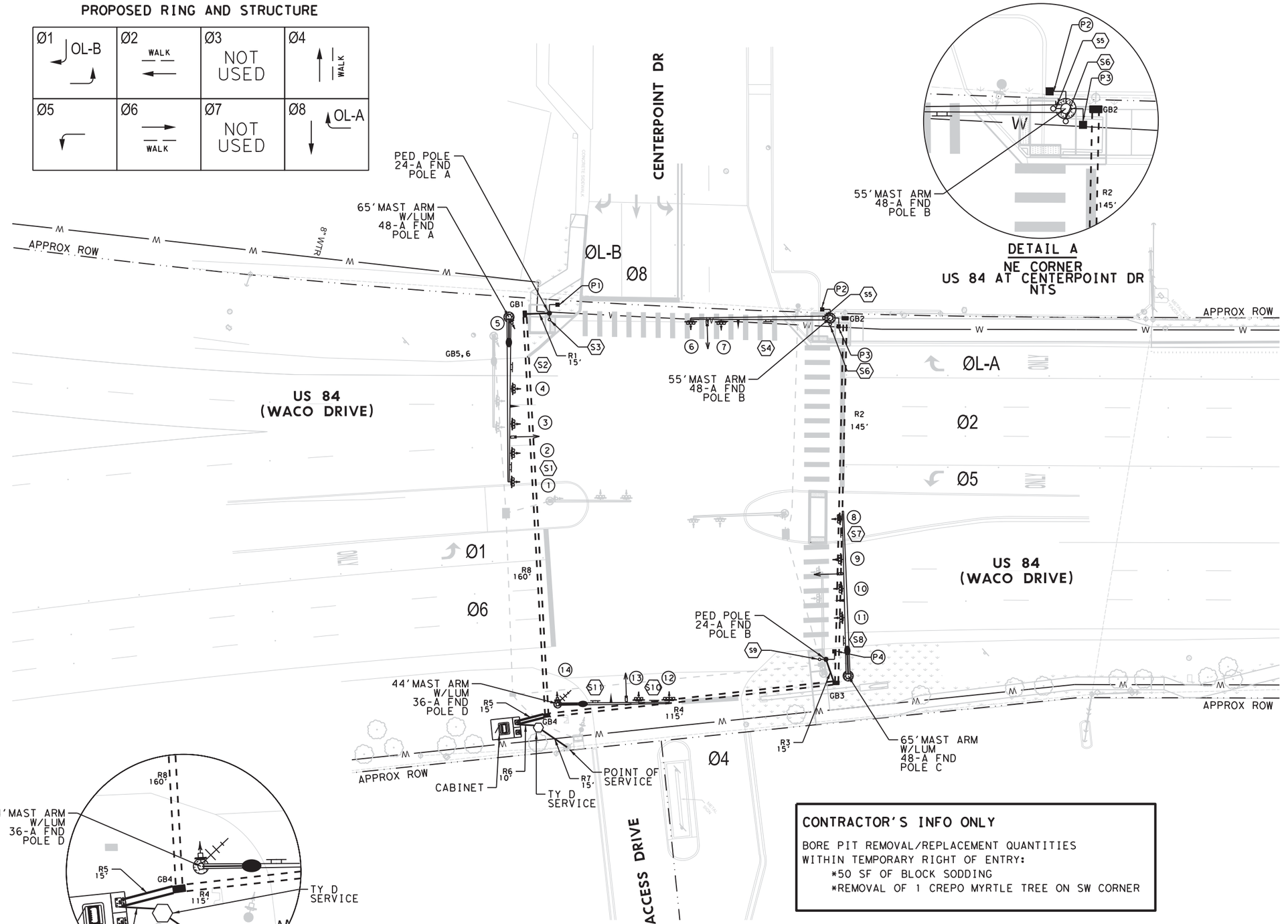

DETAIL A
NE CORNER
US 84 AT CENTERPOINT DR
NTS

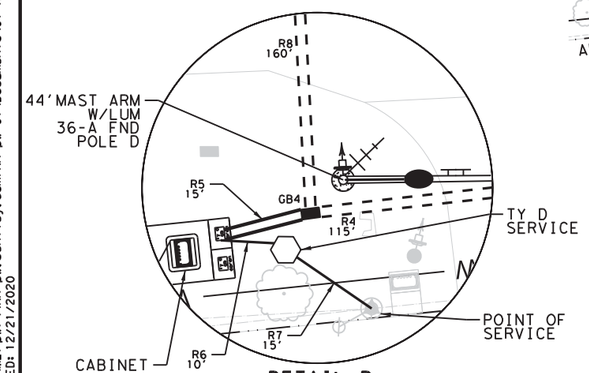

DETAIL B
SW CORNER
US 84 AT CENTERPOINT DR
NTS

LEGEND

- EXISTING POINT OF SERVICE
- PROPOSED ELECTRICAL SERVICE
- PROPOSED CONDUIT, PVC
- PROPOSED CONDUIT, BORE
- PROPOSED VIVDS
- PROPOSED GROUND BOX (TY D)
- PROPOSED LED COUNTDOWN & APS
- PROPOSED LUMINAIRE
- PROPOSED SIGNAL POLE ASSEMBLY
- PROPOSED OPTICOM DETECTOR (INSTALL ONLY)
- PROPOSED ITS RADIO ANTENNA
- PROPOSED SIGNAL CABINET

NOTES

1. SHORT RUNS FROM THE GROUND BOXES TO THE SIGNAL / PEDESTRIAN FOUNDATIONS WILL NOT BE PAID DIRECTLY, BUT SUBSIDIARY TO VARIOUS BID ITEMS. FOR THE SIGNAL POLES, THIS WILL BE 2 (3") CONDUITS.
2. INSTALL TRAFFIC SIGNAL CONTROLLER FOUNDATION PER TS-CF DETAIL.
3. ALL ROAD BORES TO BE (2) 3" SCH 80.

CONTRACTOR'S INFO ONLY

BORE PIT REMOVAL/REPLACEMENT QUANTITIES WITHIN TEMPORARY RIGHT OF ENTRY:
- *50 SF OF BLOCK SODDING
- *REMOVAL OF 1 CREPO MYRTLE TREE ON SW CORNER

ELECTRICAL SERVICE DATA

Electrical Service ID	Plan Sheet Number	Electrical Service Description	Service Conduit Size	Service Conductors No./Size	Safety Switch Amps	Main Ckt. Bkr. Pole/Amps	Two-Pole Contactor Amps	Panelbed/ Loadcenter Amp Rating	Branch Circuit ID	Branch Ckt. Bkr. Pole/Amps	Branch Circuit Amps	KVA Load
ES~~20~~1		ELEC SRV TY D 120/240 060 (NS)SS(E)PS(U)	2"	3/#6	N/A	2P/60	30	100	Sig. Controller	1P/30	32.4	4.7
									Luminaires	2P/20	6.9	

Scott R. Arnold, P.E.
03/01/2021

Kimley»Horn F-928

© 2021
Texas Department of Transportation

PROPOSED TRAFFIC SIGNAL

AT CENTERPOINT DRIVE

SHEET 2 OF 5

FED. RD. DIV. NO.	PROJECT ID.		HIGHWAY NO.
6	(SEE TITLE SHEET)		US 84
STATE	DIST.	COUNTY	SHEET NO.
TEXAS	WAC	MCLENNAN	230
CONT.	SECT.	JOB	
0055	15	072	

FILENAME: pw:\\kh-pw.bentley.com:kh-pw-01\Documents\01 Active Projects\TX-FTW-063586010 - US 84 (Waco Drive)\WAC 005515072\4 - Design\Plan Set\8. Traffic\US84_SIG01_CP.dgn
PLOTTED: 12/21/2020

SIGNAL WIRING DETAIL

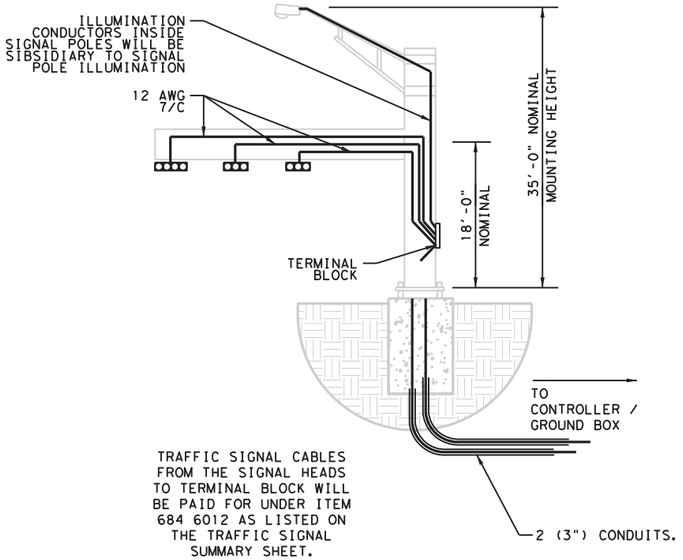

TRAFFIC SIGNAL CABLES FROM THE SIGNAL HEADS TO TERMINAL BLOCK WILL BE PAID FOR UNDER ITEM 684 6012 AS LISTED ON THE TRAFFIC SIGNAL SUMMARY SHEET.

EACH SIGNAL HEAD WILL BE WIRED TO TERMINAL BLOCK.

SIGNAL HEADS

PED SIGNAL HEADS P1, P2, P3, P4

SIGNAL HEADS #12

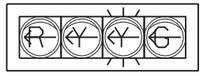

SIGNAL HEADS #1, 8

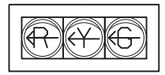

SIGNAL HEADS #2, 3, 4, 6, 7, 9, 10, 11, 13

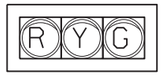

SIGNAL HEADS #5, 14

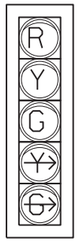

NOTES:

1. TY A SIGNS MOUNTED ON SIGNAL EQUIPMENT IS SHOWN FOR CONTRACTOR INFORMATION ONLY AND SUBSIDIARY TO ITEM 680 6002.

SIGNS

S3 S5 — R10-3E(R)

9" X 15" TY A ALUM

(0.94 SQ FT) EACH

S6 S9 — R10-3E(L)

9" X 15" TY A ALUM

(0.94 SQ FT) EACH

S10 — R10-17T

36" X 42" TY A ALUM

(10.5 SQ FT) EACH

S1 S7 — R10-5

30" X 36" TY A ALUM

(7.5 SQ FT) EACH

S2 — D3-1G

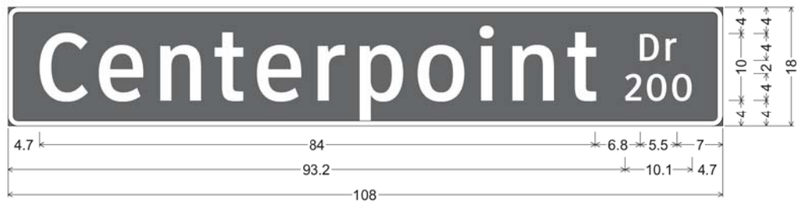

108" X 18" TY A ALUM

(14 SQ FT) EACH

D3-1G;
1.5" Radius, 0.8" Border, White on, Green;
"Centerpoint", ClearviewHwy-3-W; "Dr", ClearviewHwy-3-W; "200", ClearviewHwy-3-W;

S11 — D3-1G

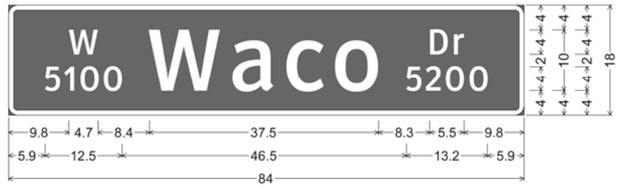

84" X 18" TY A ALUM

(10.5 SQ FT) EACH

D3-1G;
1.5" Radius, 0.8" Border, White on, Green;
"W", ClearviewHwy-3-W; "5100", ClearviewHwy-3-W; "Waco", ClearviewHwy-3-W;
"Dr", ClearviewHwy-3-W; "5200", ClearviewHwy-3-W;

S8 — D3-1G

114" X 18" TY A ALUM

(15 SQ FT) EACH

D3-1G;
1.5" Radius, 0.8" Border, White on, Green;
"200", ClearviewHwy-3-W; "Centerpoint", ClearviewHwy-3-W; "Dr", ClearviewHwy-3-W;

S4 — D3-1G

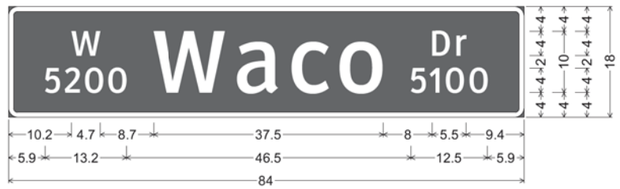

84" X 18" TY A ALUM

(10.5 SQ FT) EACH

D3-1G;
1.5" Radius, 0.8" Border, White on, Green;
"W", ClearviewHwy-3-W; "5200", ClearviewHwy-3-W; "Waco", ClearviewHwy-3-W;
"Dr", ClearviewHwy-3-W; "5100", ClearviewHwy-3-W;

Scott R. Arnold, P.E.

03/01/2021

Kimley»Horn F-928

© 2021

Texas Department of Transportation

TRAFFIC SIGNAL SIGNS AND HEADS

AT CENTERPOINT DRIVE

SHEET 3 OF 5

FED.RD. DIV.NO.	PROJECT ID.	HIGHWAY NO.
6	(SEE TITLE SHEET)	US 84

STATE	DIST.	COUNTY	SHEET NO.
TEXAS	WAC	MCLENNAN	231
CONT.	SECT.	JOB	
0055	15	072	

FILENAME: pw:\\kh-pw.bentley.com:kh-pw-01\Documents\01 Active Projects\TX-FTW-063586010 - US 84 (Waco Drive)\WAC 0055150724 - Design\Plan Set\8. Traffic\US84_SIGSIGN01_CP.DGN
PLOTTED: 12/21/2020

PROJECT	US 84 (0055-15-072)
SHEET	232

			618 6046	618 6029	618 6054	620 6007	620 6008	620 6009	620 6010	684 6007	684 6012	684 6021	684 6049	6306 6007	OPTICOM CABLE	ITS RADIO CABLE
			CONDT (PVC) (SCH 80) (2")	CONDT (PVC) (SCH 40) (3")	CONDT (PVC) (SCH 80) (3") (BORE)	ELEC CONDR (NO.8) BARE	ELEC CONDR (NO.8) INSULATED	ELEC CONDR (NO.6) BARE	ELEC CONDR (NO.6) INSULATED	TRF SIG CBL (TY A)(12 AWG)(2 CONDR)	TRF SIG CBL (TY A)(12 AWG)(7 CONDR)	TRF SIG CBL (TY A)(12 AWG)(16 CONDR)	TRF SIG CBL (TY A)(16 AWG)(3 CONDR)	VIVDS CABLING	FOR CONTRACTOR INFO ONLY	FOR CONTRACTOR INFO ONLY
TRF ID	TABLE	Location	LF	LF	LF	LF	LF	LF	LF	LF	LF	LF	LF	LF	LF	LF
CONDUIT R01*	CONDUIT	TRENCH		15		15				15			15			
CONDUIT R02-1	CONDUIT	BORE			145	145										
CONDUIT R02-2	CONDUIT	BORE			145	145				290		145		145	145	
CONDUIT R03	CONDUIT	TRENCH		15		15				15			15			
CONDUIT R04-1	CONDUIT	BORE			115	115	230									
CONDUIT R04-2	CONDUIT	BORE			115	115				345		230	115	230	230	
CONDUIT R05-1	CONDUIT	TRENCH		15		15	60									
CONDUIT R05-2	CONDUIT	TRENCH		15		15				60		60	30	60	60	15
CONDUIT R06	CONDUIT	TRENCH		10			40	10	20							
CONDUIT R07*	CONDUIT	TRENCH	15													
CONDUIT R08-1	CONDUIT	BORE			160	160	320									
CONDUIT R08-2	CONDUIT	BORE			160	160				160		160	160	160	160	
PED POLE A	CONDUIT	IN PED POLE								5			10			
PED POLE B	CONDUIT	IN PED POLE								5			10			
SIGNAL POLE A	CONDUIT	IN SIGNAL POLE									285			75	65	
SIGNAL POLE B	CONDUIT	IN SIGNAL POLE								10	155		20	80	65	
SIGNAL POLE C	CONDUIT	IN SIGNAL POLE									275			70	60	
SIGNAL POLE D	CONDUIT	IN SIGNAL POLE									155			55	50	30
Grand Total			15	70	840	900	650	10	20	905	870	595	375	875	835	45

*CONDUIT RUN 7 SHALL INCLUDE A SWEEPING 90° PVC AND SHALL STUB UP AT BOTTOM OF ONCOR POLE.

FILENAME: pw:\\kh-pw.bentley.com:kh-pw-01\Documents\01 Active Projects\TX-FTW-063586010 - US 84 (Waco Drive)\WAC 005515072\4 - Design\Plan Set\8. Traffic\US84_CONSUM01_CP.DGN
PLOTTED: 12/21/2020

Scott R. Arnold, P.E.

12/21/2020

Kimley»Horn F-928

© 2021

Texas Department of Transportation

CONDUIT AND CONDUCTOR SUMMARY

AT CENTERPOINT DRIVE

SHEET 4 OF 5

FED.RD. DIV.NO.	PROJECT ID.	HIGHWAY NO.
6	(SEE TITLE SHEET)	US 84

STATE	DIST.	COUNTY	SHEET NO.
TEXAS	WAC	MCLENNAN	232
CONT.	SECT.	JOB	
0055	15	072	

PROJECT	US 84 (0055-15-072)
SHEET	233

		624 6010	628 6144	680 6002	680 6004	682 6018	683 6001	688 6003	6062 6038	6306 6001	6306 6002	CABINET	OPTICOM	TY A SIGN
		GROUND BOX TY D (162922)W/APRON	ELC SRV TY D 120/240 060(NS)SS(E)PS(U)	INSTALL HWY TRF SIG (ISOLATED)	REMOVING TRAFFIC SIGNALS	PED SIG SEC (LED)(COUNTDOWN)	PED DETECT PUSH BUTTON (APS)	PED DETECTOR CONTROLLER UNIT	ITS RADIO (DUAL)(5 GHZ/5 GHZ)-C-U	VIVDS PROSR SYS	VIVDS CAM ASSY FXD LNS	TxDOT CABINET AND CONTROLLER	FOR CONTRACTOR INFO ONLY	FOR CONTRACTOR INFO ONLY
TRF ID	TABLE	EA	EA	EA	EA	EA	EA	EA	EA	EA	EA	EA	EA	SF
CABINET	MISCELLANEOUS											1		
GROUND BOX	MISCELLANEOUS	6												
ITS RADIO	MISCELLANEOUS								1					
OPTICOM	MISCELLANEOUS												4	
P1	MISCELLANEOUS					1								
P2	MISCELLANEOUS					1								
P3	MISCELLANEOUS					1								
P4	MISCELLANEOUS					1								
PED	MISCELLANEOUS						4	1						
SERVICE	MISCELLANEOUS		1											
SIGN	MISCELLANEOUS													83
SIGNAL	MISCELLANEOUS			1	1									
VIVDS	MISCELLANEOUS									1	4			
Grand Total		6	1	1	1	4	4	1	1	1	4	1	4	83

PROJECT	US 84 (0055-15-072)
SHEET	233

		682 6001	682 6002	682 6003	682 6004	682 6005	682 6006	682 6054	682 6055	682 6056
		VEH SIG SEC (12")LED(GRN)	VEH SIG SEC (12")LED(GRN ARW)	VEH SIG SEC (12")LED(YEL)	VEH SIG SEC (12")LED(YEL ARW)	VEH SIG SEC (12")LED(RED)	VEH SIG SEC (12")LED(RED ARW)	BACKPLATE W/REF BRDR(3 SEC)(VENT)ALUM	BACKPLATE W/REF BRDR(4 SEC)(VENT)ALUM	BACKPLATE W/REF BRDR(5 SEC)(VENT)ALUM
TRF ID	TABLE	EA	EA	EA	EA	EA	EA	EA	EA	EA
SIGNAL HEAD 01	SIGNAL HEAD		1		1		1	1		
SIGNAL HEAD 02	SIGNAL HEAD	1		1		1		1		
SIGNAL HEAD 03	SIGNAL HEAD	1		1		1		1		
SIGNAL HEAD 04	SIGNAL HEAD	1		1		1		1		
SIGNAL HEAD 05	SIGNAL HEAD	1	1	1	1	1				1
SIGNAL HEAD 06	SIGNAL HEAD	1		1		1		1		
SIGNAL HEAD 07	SIGNAL HEAD	1		1		1		1		
SIGNAL HEAD 08	SIGNAL HEAD		1		1		1	1		
SIGNAL HEAD 09	SIGNAL HEAD	1		1		1		1		
SIGNAL HEAD 10	SIGNAL HEAD	1		1		1		1		
SIGNAL HEAD 11	SIGNAL HEAD	1		1		1		1		
SIGNAL HEAD 12	SIGNAL HEAD		1		2		1		1	
SIGNAL HEAD 13	SIGNAL HEAD	1		1		1		1		
SIGNAL HEAD 14	SIGNAL HEAD	1	1	1	1	1				1
Grand Total		11	5	11	6	11	3	11	1	2

PROJECT	US 84 (0055-15-072)
SHEET	233

		686 6047	686 6057	686 6067	687 6001
		INS TRF SIG PL AM(S)1 ARM(44')LUM	INS TRF SIG PL AM(S)1 ARM(55')	INS TRF SIG PL AM(S)1 ARM(65')LUM	PED POLE ASSEMBLY
TRF ID	TABLE	EA	EA	EA	EA
PED POLE A	POLE				1
PED POLE B	POLE				1
TRAFFIC SIGNAL POLE A	POLE			1	
TRAFFIC SIGNAL POLE B	POLE		1		
TRAFFIC SIGNAL POLE C	POLE			1	
TRAFFIC SIGNAL POLE D	POLE	1			
Grand Total		1	1	2	2

PROJECT	US 84 (0055-15-072)
SHEET	233

		PED POLE FND	416 6032	416 6034
		FOR CONTRACTOR INFO ONLY	DRILL SHAFT (TRF SIG POLE) (36 IN)	DRILL SHAFT (TRF SIG POLE) (48 IN)
TRF ID	TABLE	LF	LF	LF
PED POLE FND A	FOUNDATIONS	5.7		
PED POLE FND B	FOUNDATIONS	5.7		
SIGNAL POLE FND A	FOUNDATIONS			21.9
SIGNAL POLE FND B	FOUNDATIONS			21.9
SIGNAL POLE FND C	FOUNDATIONS			21.9
SIGNAL POLE FND D	FOUNDATIONS		13.2	
Grand Total		11.4	13.2	65.7

Scott R Arnold, P.E.

03/01/2021

Kimley»Horn F-928

© 2021

Texas Department of Transportation

TRAFFIC SIGNAL SUMMARY

AT CENTERPOINT DRIVE

SHEET 5 OF 5

FED.RD. DIV.NO.	PROJECT ID.	HIGHWAY NO.
6	(SEE TITLE SHEET)	US 84

STATE	DIST.	COUNTY	SHEET NO.
TEXAS	WAC	MCLENNAN	
CONT.	SECT.	JOB	233
0055	15	072	

FILENAME: pw:\\kh-pw.bentley.com:kh-pw-01\Documents\01 Active Projects\TX-FTW-063586010 - US 84 (Waco Drive)\WAC 005515072\4 - Design\Plan Set\8. Traffic\US84_SIGSUM01_CP.dgn
PLOTTED: 12/21/2020

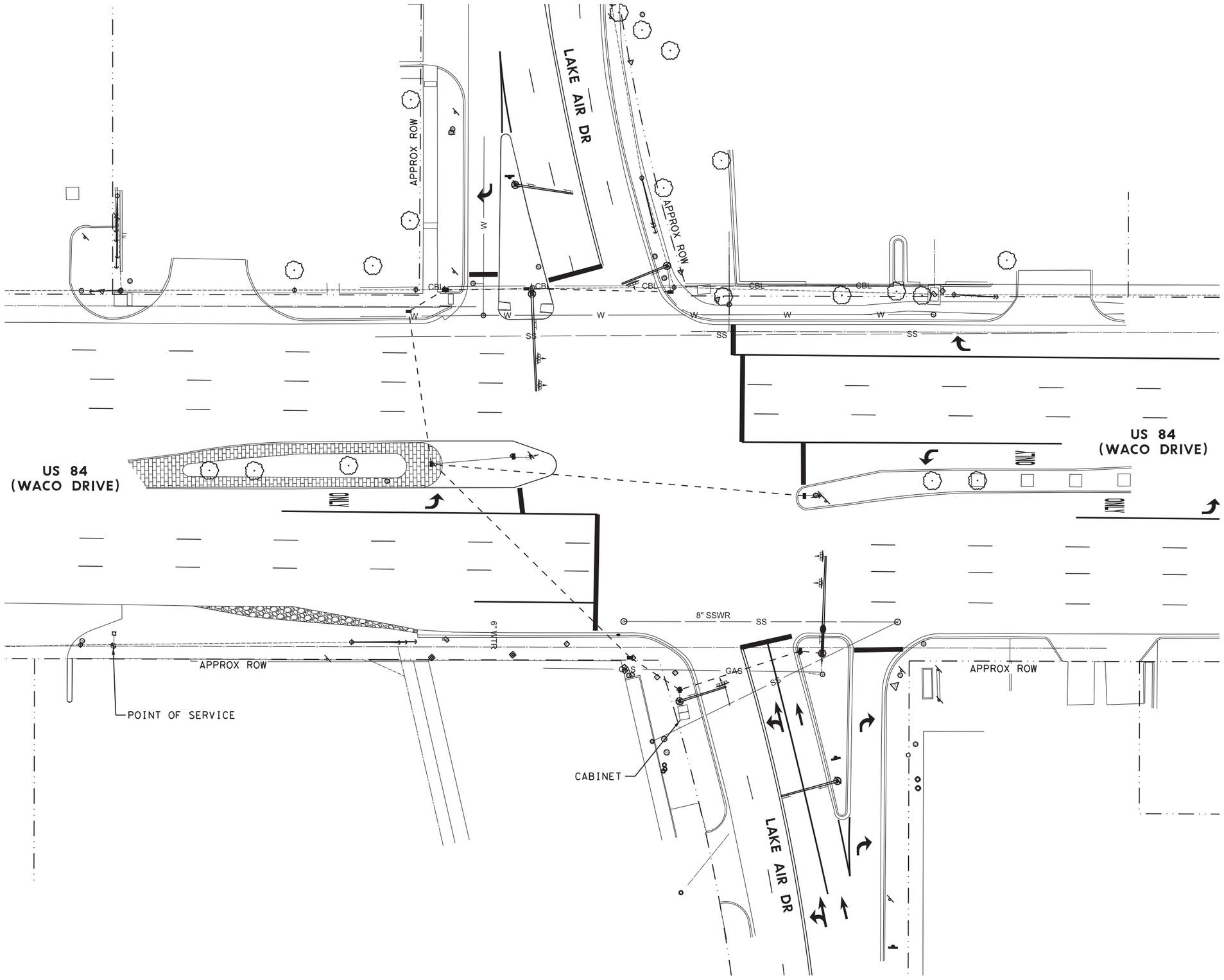

N

0' 20' 40'

SCALE

LEGEND

- POINT OF SERVICE
- ELECTRICAL SERVICE
- CONDUIT, PVC
- GROUND BOX

NOTES

1. THE LOCATIONS SHOWN AS EXISTING CONDUIT RUNS ARE APPROXIMATE. THE EXACT LOCATION WILL BE DETERMINED IN THE FIELD. NO EXISTING CONDUIT WILL BE USED, SEE PROPOSED TRAFFIC SIGNAL SHEETS.

SCOTT R. ARNOLD 96782 LICENSED PROFESSIONAL ENGINEER STATE OF TEXAS

Scott R. Arnold, P.E.

12/21/2020

Kimley»Horn F-928

© 2021

Texas Department of Transportation

CONDITION DIAGRAM

AT LAKE AIR DRIVE

SHEET 1 OF 5

FED.RD. DIV.NO.	PROJECT ID.	HIGHWAY NO.
6	(SEE TITLE SHEET)	US 84

STATE	DIST.	COUNTY	SHEET NO.
TEXAS	WAC	MCLENNAN	234
CONT.	SECT.	JOB	
0055	15	072	

FILENAME: pw:\\kh-pw.bentley.com:kh-pw-01\Documents\01 Active Projects\TX-FTW-063586010 - US 84 (Waco Drive)\WAC 0055150724 - Design\Plan Set\8. Traffic\US84_COND01_LA.dgn
PLOTTED: 12/21/2020

PROPOSED RING AND STRUCTURE

Ø1	Ø2 WALK	Ø3 OL-A	Ø4 WALK, OL-B
Ø5	Ø6 WALK	Ø7 NOT USED	Ø8 NOT USED

CONTRACTOR'S INFO ONLY

BORE PIT REMOVAL/REPLACEMENT QUANTITIES WITHIN TEMPORARY RIGHT OF ENTRY:
- *200 SF OF LANDSCAPE/IRRIGATION REMOVAL/REPLACEMENT ON NW CORNER
- *50 SF OF CONCRETE MEDIAN

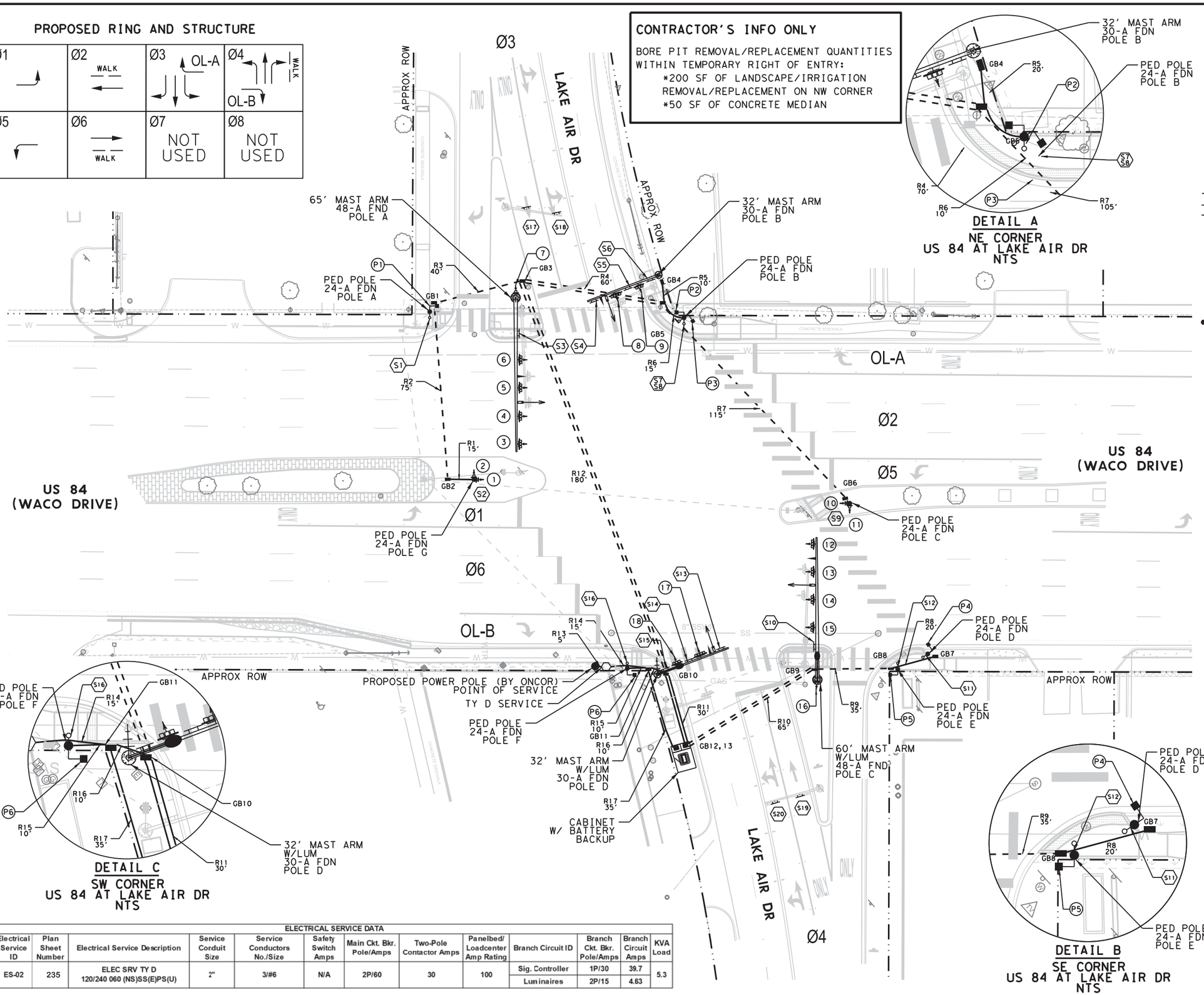

DETAIL A
NE CORNER
US 84 AT LAKE AIR DR
NTS

DETAIL B
SE CORNER
US 84 AT LAKE AIR DR
NTS

DETAIL C
SW CORNER
US 84 AT LAKE AIR DR
NTS

0' 20' 40'

LEGEND

- PROPOSED POINT OF SERVICE
- PROPOSED ELECTRICAL SERVICE
- PROPOSED CONDUIT, PVC
- PROPOSED CONDUIT, BORE
- PROPOSED VIVDS
- PROPOSED GROUND BOX (TY D)
- PROPOSED LED COUNTDOWN & APS
- PROPOSED LUMINAIRE
- PROPOSED SIGNAL POLE ASSEMBLY
- PROPOSED OPTICOM DETECTOR (INSTALL ONLY)
- PROPOSED ITS RADIO ANTENNA
- PROPOSED SIGNAL CABINET

NOTES:

1. SHORT RUNS FROM THE GROUND BOXES TO THE SIGNAL / PEDESTRIAN FOUNDATIONS WILL NOT BE PAID DIRECTLY, BUT SUBSIDIARY TO VARIOUS BID ITEMS. FOR THE SIGNAL POLES, THIS WILL BE 2 (3") CONDUITS.
2. INSTALL TRAFFIC SIGNAL CONTROLLER FOUNDATION PER TS-CF DETAIL.
3. ALL ROAD BORES TO BE (2) 3" SCH 80.

ELECTRICAL SERVICE DATA

Electrical Service ID	Plan Sheet Number	Electrical Service Description	Service Conduit Size	Service Conductors No./Size	Safety Switch Amps	Main Ckt. Bkr. Pole/Amps	Two-Pole Contactor Amps	Panelbed/ Loadcenter Amp Rating	Branch Circuit ID	Branch Ckt. Bkr. Pole/Amps	Branch Circuit Amps	KVA Load
ES-02	235	ELEC SRV TY D 120/240 060 (NS)SS(E)PS(U)	2"	3/#6	N/A	2P/60	30	100	Sig. Controller	1P/30	39.7	5.3
									Luminaires	2P/15	4.63	

Scott R. Arnold, P.E.
03/01/2021

Kimley»Horn F-928

© 2021 Texas Department of Transportation

PROPOSED TRAFFIC SIGNAL

AT LAKE AIR DRIVE

SHEET 2 OF 5

FED. RD. DIV. NO.	PROJECT ID.		HIGHWAY NO.
6	(SEE TITLE SHEET)		US 84
STATE	DIST.	COUNTY	SHEET NO.
TEXAS	WAC	MCLENNAN	235
CONT.	SECT.	JOB	
0055	15	072	

FILENAME: pw:\\kh-pw.bentley.com:kh-pw-01\Documents\01 Active Projects\TX-FTW-063586010 - US 84 (Waco Drive)\WAC 0055150724 - Design\Plan Set\8. Traffic\US84_SIG01_LA.dgn
PLOTTED: 12/21/2020

SIGNAL WIRING DETAIL

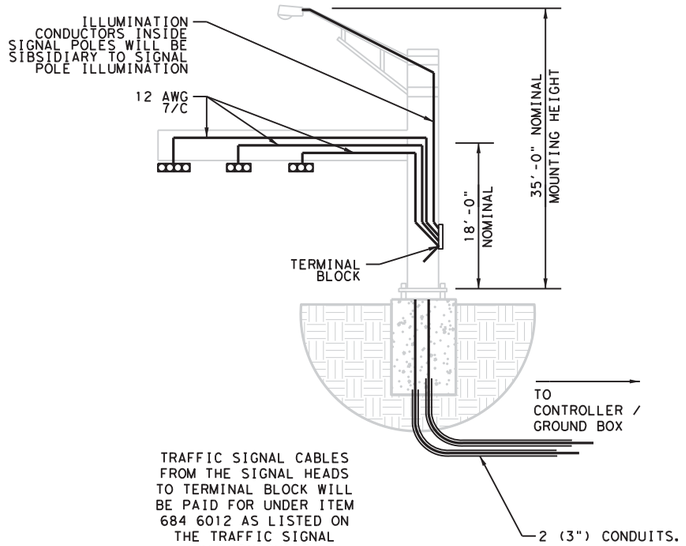

TRAFFIC SIGNAL CABLES FROM THE SIGNAL HEADS TO TERMINAL BLOCK WILL BE PAID FOR UNDER ITEM 684 6012 AS LISTED ON THE TRAFFIC SIGNAL SUMMARY SHEET.

EACH SIGNAL HEAD WILL BE WIRED TO TERMINAL BLOCK.

SIGNAL HEADS

PED SIGNAL HEADS P1, P2, P3, P4, P5, P6

SIGNAL HEADS #2, 11

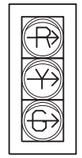

SIGNAL HEADS #1, 10

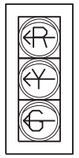

SIGNAL HEADS #7, 16

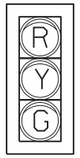

SIGNAL HEADS #3, 4, 5, 9, 12, 13, 14, 18

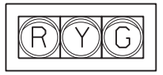

SIGNAL HEADS #6, 15

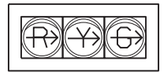

SIGNAL HEADS #8, 17

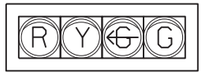

NOTES:

1. TY A SIGNS MOUNTED ON SIGNAL EQUIPMENT IS SHOWN FOR CONTRACTOR INFORMATION ONLY AND SUBSIDIARY TO ITEM 680 6002.

SIGNS

(S1) (S7) (S12) (S16)

R10-3E(R)

9" X 15"
TY A
ALUM

(0.94 SQ FT)
EACH

(S8) (S11)

R10-3E(L)

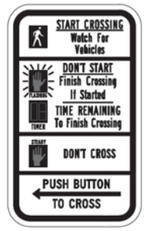

9" X 15"
TY A
ALUM

(0.94 SQ FT)
EACH

(S2) (S9)

R10-5

30" X 36"
TY A
ALUM

(7.5 SQ FT)
EACH

(S4) (S13) (S18) (S20)

R3-6

30" X 36"
TY A
ALUM

(7.5 SQ FT)
EACH

(S5) (S14) (S17) (S19)

R3-5A

30" X 36"
TY A
ALUM

(7.5 SQ FT)
EACH

(S3)

D3-1G

96" X 18"
TY A
ALUM

(12 SQ FT)
EACH

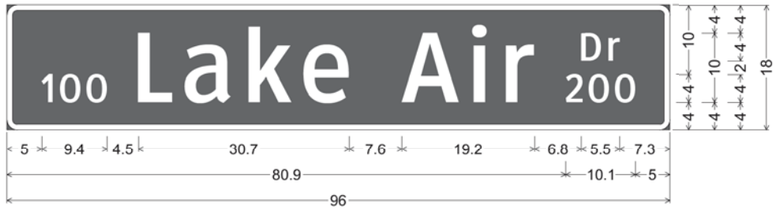

D3-1G;
1.5" Radius, 0.8" Border, White on, Green;
" ", ClearviewHwy-3-W; "100", ClearviewHwy-3-W; "Lake Air", ClearviewHwy-3-W;
"Dr", ClearviewHwy-3-W; "200", ClearviewHwy-3-W;

(S10)

D3-1G

96" X 18"
TY A
ALUM

(12 SQ FT)
EACH

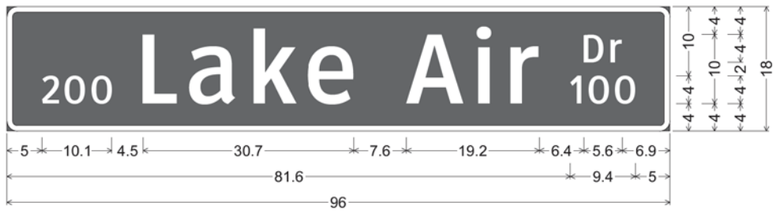

D3-1G;
1.5" Radius, 0.8" Border, White on, Green;
" ", ClearviewHwy-3-W; "200", ClearviewHwy-3-W; "Lake Air", ClearviewHwy-3-W;
"Dr", ClearviewHwy-3-W; "100", ClearviewHwy-3-W;

(S6)

D3-1G

84" X 18"
TY A
ALUM

(10.5 SQ FT)
EACH

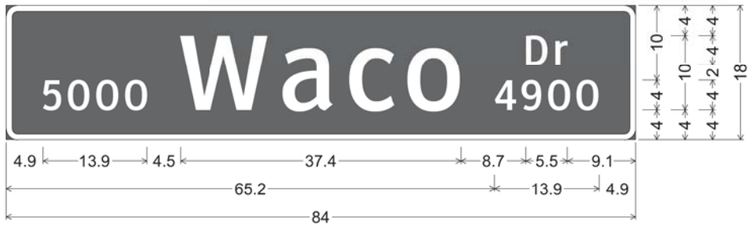

D3-1G;
1.5" Radius, 0.8" Border, White on, Green;
" ", ClearviewHwy-3-W; "5000", ClearviewHwy-3-W; "Waco", ClearviewHwy-3-W;
"Dr", ClearviewHwy-3-W; "4900", ClearviewHwy-3-W;

(S15)

D3-1G

84" X 18"
TY A
ALUM

(10.5 SQ FT)
EACH

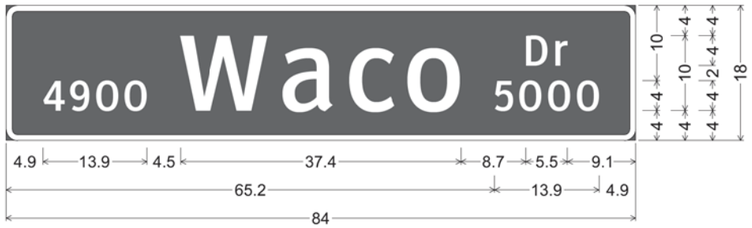

D3-1G;
1.5" Radius, 0.8" Border, White on, Green;
" ", ClearviewHwy-3-W; "4900", ClearviewHwy-3-W; "Waco", ClearviewHwy-3-W;
"Dr", ClearviewHwy-3-W; "5000", ClearviewHwy-3-W;

STATE OF TEXAS
96782
LICENSED
PROFESSIONAL
ENGINEER

Scott R. Arnold, P.E.

03/01/2021

Kimley»Horn F-928

© 2021

Texas Department of Transportation

TRAFFIC SIGNAL SIGNS AND HEADS

AT LAKE AIR DRIVE

SHEET 3 OF 5

FED.RD. DIV.NO.	PROJECT ID.	HIGHWAY NO.
6	(SEE TITLE SHEET)	US 84

STATE	DIST.	COUNTY	SHEET NO.
TEXAS	WAC	MCLENNAN	236
CONT.	SECT.	JOB	
0055	15	072	

FILENAME: pw:\\kh-pw.bentley.com:kh-pw-01\Documents\01 Active Projects\TX-FTW-063586010 - US 84 (Waco Drive)\WAC 0055150724 - Design\Plan Set\8. Traffic\US84_SIGSIGN01_LA.dgn
PLOTTED: 12/21/2020

PROJECT	US 84 (0055-15-072)
SHEET	237

			618 6046	618 6029	618 6054	620 6007	620 6008	620 6009	620 6010	684 6007	684 6012	684 6021	684 6049	6306 6007	OPTICOM CABLE	ITS RADIO CABLE
			CONDT (PVC) (SCH 80) (2")	CONDT (PVC) (SCH 40) (3")	CONDT (PVC) (SCH 80) (3") (BORE)	ELEC CONDR (NO.8) BARE	ELEC CONDR (NO.8) INSULATED	ELEC CONDR (NO.6) BARE	ELEC CONDR (NO.6) INSULATED	TRF SIG CBL (TY A)(12 AWG)(2 CONDR)	TRF SIG CBL (TY A)(12 AWG)(7 CONDR)	TRF SIG CBL (TY A)(12 AWG)(16 CONDR)	TRF SIG CBL (TY A)(16 AWG)(3 CONDR)	VIVDS CABLING	FOR CONTRACTOR INFO ONLY	FOR CONTRACTOR INFO ONLY
TRF ID	TABLE	Location	LF	LF	LF	LF	LF	LF	LF	LF	LF	LF	LF	LF	LF	LF
CONDUIT R01	CONDUIT	TRENCH		15		15						15				
CONDUIT R02	CONDUIT	BORE			75	75						75				
CONDUIT R03	CONDUIT	BORE			40	40				40		40	40			
CONDUIT R04-1	CONDUIT	BORE			70	70				140		140	140	70	70	
CONDUIT R04-2	CONDUIT	BORE			70	70										
CONDUIT R05	CONDUIT	TRENCH		20		20						20		20	20	
CONDUIT R06	CONDUIT	TRENCH		10		10				20			20			
CONDUIT R07	CONDUIT	BORE			105	105						105				
CONDUIT R08	CONDUIT	TRENCH		20		20				20			20			
CONDUIT R09	CONDUIT	BORE			35	35				70			70			
CONDUIT R10-1	CONDUIT	BORE			65	65	130			130		65	130	65	65	
CONDUIT R10-2	CONDUIT	BORE			65	65										
CONDUIT R11-1	CONDUIT	TRENCH		30		30				120		150	150	120	120	30
CONDUIT R11-2	CONDUIT	TRENCH		30		30	60									
CONDUIT R12-1	CONDUIT	BORE			180	180				540		720	540	360	360	
CONDUIT R12-2	CONDUIT	BORE			180	180										
CONDUIT R13*	CONDUIT	TRENCH	5													
CONDUIT R14-1	CONDUIT	TRENCH		15				15	30							
CONDUIT R14-2	CONDUIT	TRENCH		15		15	30									
CONDUIT R15	CONDUIT	TRENCH		10		10				10			10			
CONDUIT R16	CONDUIT	TRENCH		10		20	20			10			10			
CONDUIT R17	CONDUIT	TRENCH		10				10	20							
PED POLE A	CONDUIT	IN PED POLE								5			10			
PED POLE B	CONDUIT	IN PED POLE								10			20			
PED POLE C	CONDUIT	IN PED POLE									30					
PED POLE D	CONDUIT	IN PED POLE								5			10			
PED POLE E	CONDUIT	IN PED POLE								5			10			
PED POLE F	CONDUIT	IN PED POLE								5			10			
PED POLE G	CONDUIT	IN PED POLE									30					
SIGNAL POLE A	CONDUIT	IN SIGNAL POLE									260			70	60	
SIGNAL POLE B	CONDUIT	IN SIGNAL POLE									70			50	45	
SIGNAL POLE C	CONDUIT	IN SIGNAL POLE									235			60	70	
SIGNAL POLE D	CONDUIT	IN SIGNAL POLE									70			50	45	30
Grand Total			5	185	885	1055	240	25	50	1130	695	1330	1190	865	855	60

*CONDUIT RUN 13 SHALL INCLUDE A SWEEPING 90° PVC AND SHALL STUB UP AT BOTTOM OF ONCOR POLE.

Scott R. Arnold, P.E.

12/21/2020

Kimley»Horn F-928

© 2021

Texas Department of Transportation

CONDUIT AND CONDUCTOR SUMMARY

AT LAKE AIR DRIVE

SHEET 4 OF 5

FED.RD. DIV.NO.	PROJECT ID.		HIGHWAY NO.
6	(SEE TITLE SHEET)		US 84
STATE	DIST.	COUNTY	SHEET NO.
TEXAS	WAC	MCLENNAN	237
CONT.	SECT.	JOB	
0055	15	072	

FILENAME: pw:\\kh-pw.bentley.com:kh-pw-01\Documents\01 Active Projects\TX-FTW-063586010 - US 84 (Waco Drive)\WAC 005515072\4 - Design\Plan Set\8. Traffic\US84_CONSUM01_LA.dgn
PLOTTED: 12/21/2020

PROJECT	US 84 (0055-15-072)													
SHEET	238													
		624 6010	628 6144	680 6002	680 6004	682 6018	688 6001	688 6003	6058 6001	6062 6038	6306 6001	6306 6002	CABINET	OPTICOM	TY A SIGN
		GROUND BOX TY D (162922)W/APRON	ELC SRV TY D 120/240 060(NS)SS(E)PS(U)	INSTALL HWY TRF SIG (ISOLATED)	REMOVING TRAFFIC SIGNALS	PED SIG SEC (LED)(COUNTDOWN)	PED DETECT PUSH BUTTON (APS)	PED DETECTOR CONTROLLER UNIT	BBU SYSTEM (EXTERNAL BATT CABINET)	ITS RADIO (DUAL)(5 GHZ/5 GHZ)-C-U	VIVDS PROSR SYS	VIVDS CAM ASSY FXD LNS	TxDOT CABINET AND CONTROLLER	FOR CONTRACTOR INFO ONLY	FOR CONTRACTOR INFO ONLY
TRF ID	TABLE	EA	EA	EA	EA	EA	EA	EA	EA	EA	EA	EA	EA	EA	SF
BBU	MISCELLANEOUS								1						
CABINET	MISCELLANEOUS												1		
GROUND BOX	MISCELLANEOUS	12													
ITS RADIO	MISCELLANEOUS									1					
OPTICOM	MISCELLANEOUS														
P1	MISCELLANEOUS					1									
P2	MISCELLANEOUS					1									
P3	MISCELLANEOUS					1									
P4	MISCELLANEOUS					1									
P5	MISCELLANEOUS					1									
P6	MISCELLANEOUS					1									
PED	MISCELLANEOUS						6	1							
SERVICE	MISCELLANEOUS		1												
SIGN	MISCELLANEOUS														128
SIGNAL	MISCELLANEOUS			1	1									4	
VIVDS	MISCELLANEOUS										1	4			
Grand Total		12	1	1	1	6	6	1	1	1	1	4	1	4	128

PROJECT	US 84 (0055-15-072)								
SHEET	238								
		682 6001	682 6002	682 6003	682 6004	682 6005	682 6006	682 6054	682 6055
		VEH SIG SEC (12")LED(GRN)	VEH SIG SEC (12")LED(GRN ARW)	VEH SIG SEC (12")LED(YEL)	VEH SIG SEC (12")LED(YEL ARW)	VEH SIG SEC (12")LED(RED)	VEH SIG SEC (12")LED(RED ARW)	BACKPLATE W/REF BRDR(3 SEC)(VENT)ALUM	BACKPLATE W/REF BRDR(4 SEC)(VENT)ALUM
TRF ID	TABLE	EA	EA	EA	EA	EA	EA	EA	EA
SIGNAL HEAD 01	SIGNAL HEAD		1		1		1	1	
SIGNAL HEAD 02	SIGNAL HEAD		1		1		1	1	
SIGNAL HEAD 03	SIGNAL HEAD	1		1		1		1	
SIGNAL HEAD 04	SIGNAL HEAD	1		1		1		1	
SIGNAL HEAD 05	SIGNAL HEAD	1		1		1		1	
SIGNAL HEAD 06	SIGNAL HEAD		1		1		1	1	
SIGNAL HEAD 07	SIGNAL HEAD	1		1		1		1	
SIGNAL HEAD 08	SIGNAL HEAD	1	1	1		1			1
SIGNAL HEAD 09	SIGNAL HEAD	1		1		1		1	
SIGNAL HEAD 10	SIGNAL HEAD		1		1		1	1	
SIGNAL HEAD 11	SIGNAL HEAD		1		1		1	1	
SIGNAL HEAD 12	SIGNAL HEAD	1		1		1		1	
SIGNAL HEAD 13	SIGNAL HEAD	1		1		1		1	
SIGNAL HEAD 14	SIGNAL HEAD	1		1		1		1	
SIGNAL HEAD 15	SIGNAL HEAD		1		1		1	1	
SIGNAL HEAD 16	SIGNAL HEAD	1		1		1		1	
SIGNAL HEAD 17	SIGNAL HEAD	1	1	1		1			1
SIGNAL HEAD 18	SIGNAL HEAD	1		1		1		1	
Grand Total		12	8	12	6	12	6	16	2

PROJECT	US 84 (0055-15-072)					
SHEET	238					
		686 6033	686 6035	686 6063	686 6065	687 6001
		INS TRF SIG PL AM(S)1 ARM(32')	INS TRF SIG PL AM(S)1 ARM(32')LUM	INS TRF SIG PL AM(S)1 ARM(60')LUM	INS TRF SIG PL AM(S)1 ARM(65')	PED POLE ASSEMBLY
TRF ID	TABLE	EA	EA	EA	EA	EA
PED POLE A	POLE					1
PED POLE B	POLE					1
PED POLE C	POLE					1
PED POLE D	POLE					1
PED POLE E	POLE					1
PED POLE F	POLE					1
TRAFFIC SIGNAL POLE A	POLE				1	
TRAFFIC SIGNAL POLE B	POLE	1				
TRAFFIC SIGNAL POLE C	POLE			1		
TRAFFIC SIGNAL POLE D	POLE		1			
Grand Total		1	1	1	1	6

PROJECT	US 84 (0055-15-072)			
SHEET	238			
		PED POLE FND	416 6031	416 6034
		FOR CONTRACTOR INFO ONLY	DRILL SHAFT (TRF SIG POLE) (30 IN)	DRILL SHAFT (TRF SIG POLE) (48 IN)
TRF ID	TABLE	LF	LF	LF
PED POLE FND A	FOUNDATIONS	5.7		
PED POLE FND B	FOUNDATIONS	5.7		
PED POLE FND C	FOUNDATIONS	5.7		
PED POLE FND D	FOUNDATIONS	5.7		
PED POLE FND E	FOUNDATIONS	5.7		
PED POLE FND F	FOUNDATIONS	5.7		
SIGNAL POLE FND A	FOUNDATIONS			21.9
SIGNAL POLE FND B	FOUNDATIONS		11.3	
SIGNAL POLE FND C	FOUNDATIONS			21.9
SIGNAL POLE FND D	FOUNDATIONS		11.3	
Grand Total		34.2	22.6	43.8

FILENAME: pw:\\kh-pw.bentley.com:kh-pw-01\Documents\01 Active Projects\TX-FTW-063586010 - US 84 (Waco Drive)\WAC 0055150721\4 - Design\Plan Set\8. Traffic\US84_SIGSUM01_LA.dgn
PLOTTED: 12/21/2020

STATE OF TEXAS
SCOTT K. ARNOLD
96782
LICENSED
PROFESSIONAL ENGINEER
Scott K. Arnold, P.E.
03/01/2021

Kimley»Horn F-928

© 2021

Texas Department of Transportation

TRAFFIC SIGNAL SUMMARY

AT LAKE AIR DRIVE

SHEET 5 OF 5

FED.RD. DIV.NO.	PROJECT ID.	HIGHWAY NO.
6	(SEE TITLE SHEET)	US 84

STATE	DIST.	COUNTY	SHEET NO.
TEXAS	WAC	MCLENNAN	238
CONT.	SECT.	JOB	
0055	15	072	

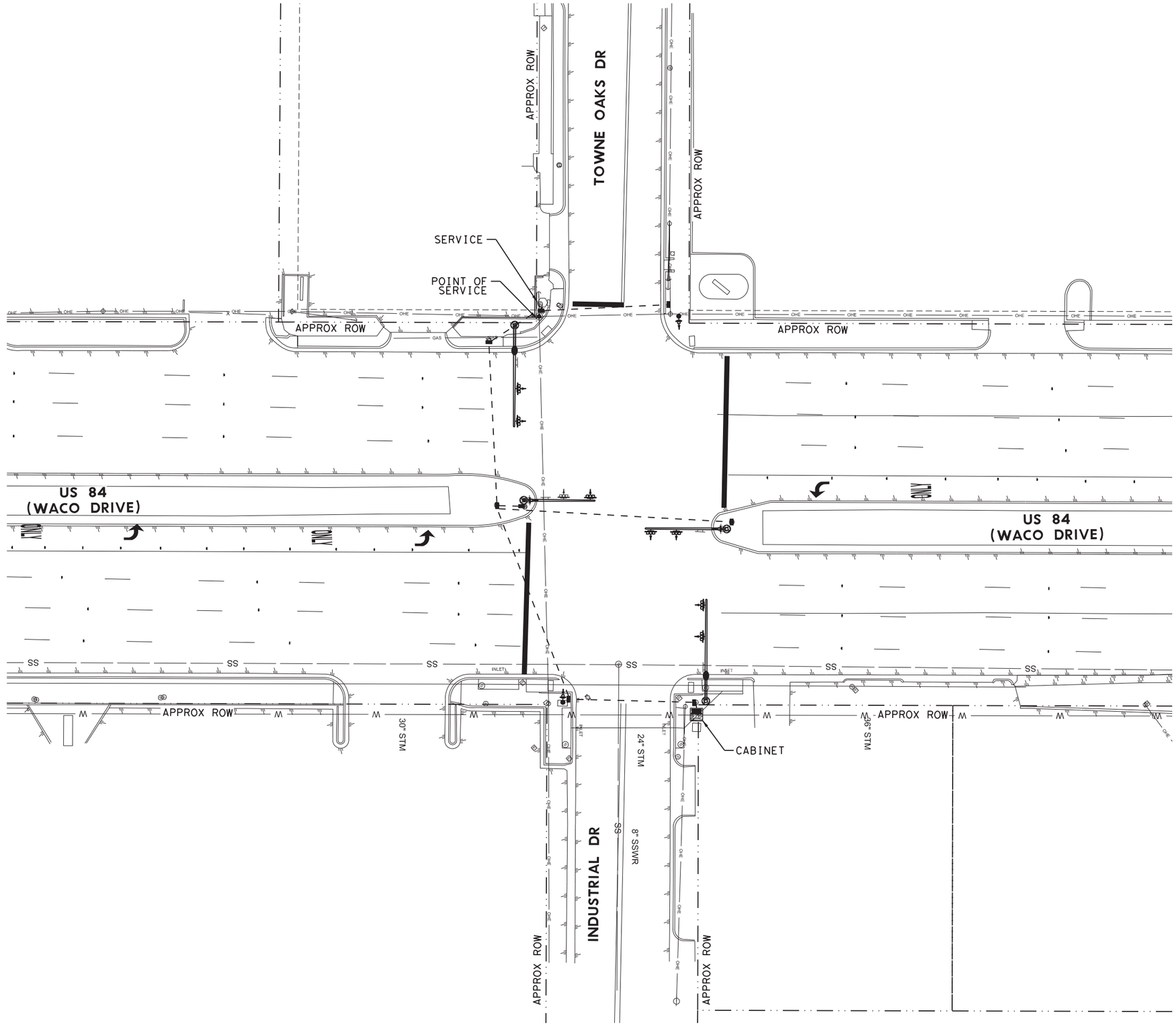

0′ 20′ 40′ HORZ

LEGEND

- POINT OF SERVICE
- ELECTRICAL SERVICE
- CONDUIT, PVC
- GROUND BOX

NOTES:

1. THE LOCATIONS SHOWN AS EXISTING CONDUIT ARE APPROXIMATE. THE EXACT LOCATION WILL BE DETERMINED IN THE FIELD. NO EXISTING CONDUIT WILL BE USED. SEE PROPOSED TRAFFIC SIGNAL SHEETS.

STATE OF TEXAS
SCOTT R. ARNOLD
96782
LICENSED
PROFESSIONAL ENGINEER

Scott R. Arnold, P.E.
12/21/2020

Kimley»Horn F-928

© 2021
Texas Department of Transportation

CONDITION DIAGRAM

AT TOWNE OAKS DRIVE

SHEET 1 OF 5

FED.RD. DIV.NO.	PROJECT ID.	HIGHWAY NO.
6	(SEE TITLE SHEET)	US 84

STATE	DIST.	COUNTY	SHEET NO.
TEXAS	WAC	MCLENNAN	239
CONT.	SECT.	JOB	
0055	15	072	

FILENAME: pw:\\kh-pw.bentley.com:kh-pw-01\Documents\01 Active Projects\TX-FTW-063586010 - US 84 (Waco Drive)\WAC 0055150724 - Design\Plan Set\8. Traffic\US84_EXCON_TO.dgn
PLOTTED: 12/21/2020

ELECTRICAL SERVICE DATA												
Electrical Service ID	Plan Sheet Number	Electrical Service Description	Service Conduit Size	Service Conductors No./Size	Safety Switch Amps	Main Ckt. Bkr. Pole/Amps	Two-Pole Contactor Amps	Panelbed/ Loadcenter Amp Rating	Branch Circuit ID	Branch Ckt. Bkr. Pole/Amps	Branch Circuit Amps	KVA Load
ES-03	240	ELEC SRV TY D 120/240 060 (NS)SS(E)PS(U)	2"	3/#6	N/A	2P/60	30	100	Sig. Controller	1P/40	31.4	4
									Luminaires	1P/15	2.3	

PROPOSED RING AND STRUCTURE

Ø1	Ø2 WALK	Ø3 NOT USED	Ø4 WALK
Ø5	Ø6 WALK	Ø7 NOT USED	Ø8

CONTRACTOR'S INFO ONLY

BORE PIT REMOVAL/REPLACEMENT QUANTITIES WITHIN TEMPORARY RIGHT OF ENTRY:
- *25 SF OF BLOCK SODDING ON SW CORNER
- *50 SF OF ASPHALT PARKING LOT ON SE CORNER

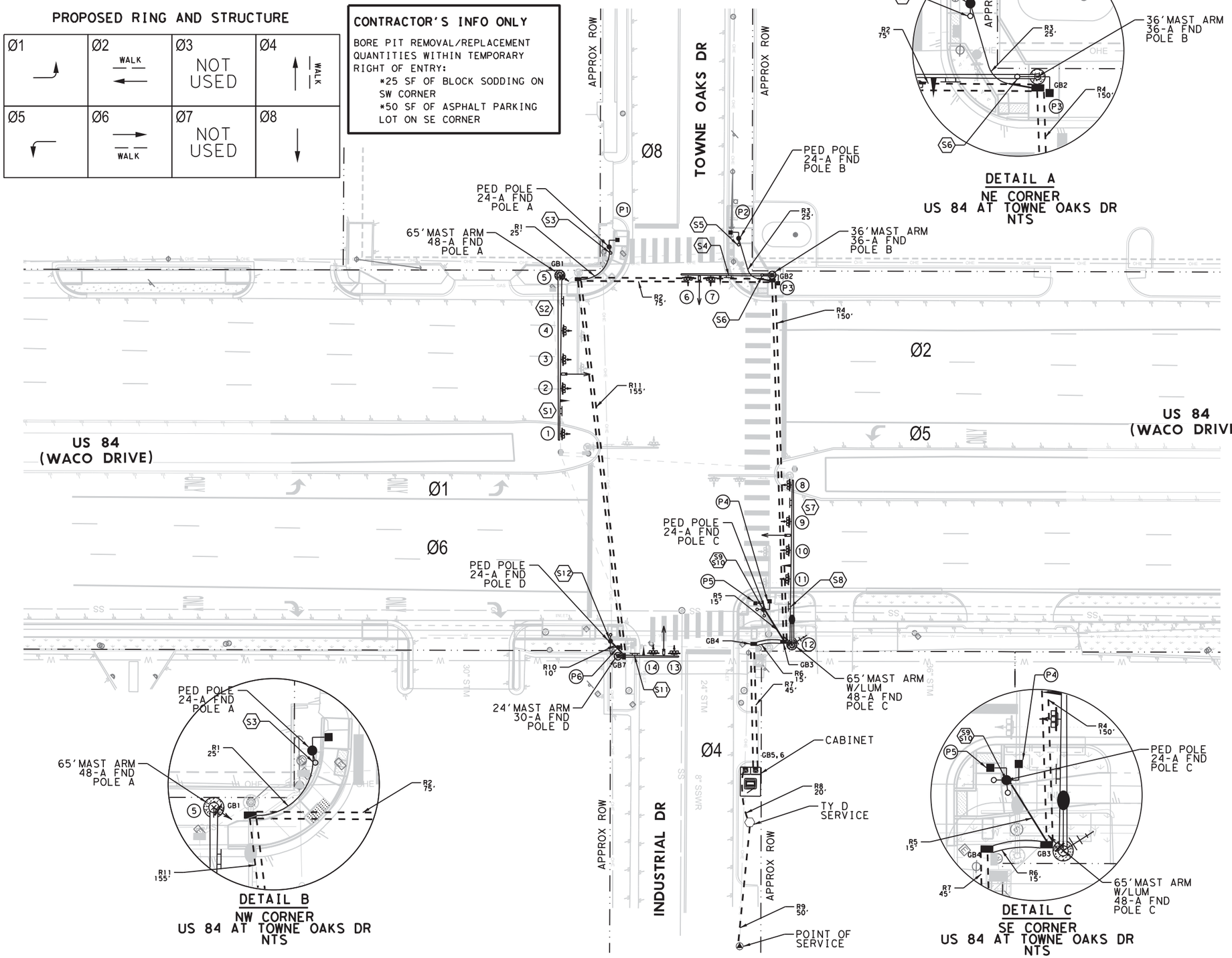

DETAIL A
NE CORNER
US 84 AT TOWNE OAKS DR
NTS

DETAIL B
NW CORNER
US 84 AT TOWNE OAKS DR
NTS

DETAIL C
SE CORNER
US 84 AT TOWNE OAKS DR
NTS

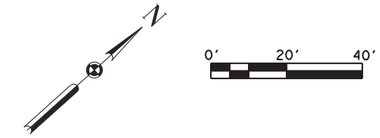

LEGEND

- PROPOSED POINT OF SERVICE
- PROPOSED ELECTRICAL SERVICE
- PROPOSED CONDUIT, PVC
- PROPOSED CONDUIT, BORE
- PROPOSED VIVDS
- PROPOSED GROUND BOX (TY D)
- PROPOSED LED COUNTDOWN & APS
- PROPOSED LUMINAIRE
- PROPOSED SIGNAL POLE ASSEMBLY
- PROPOSED OPTICOM DETECTOR (INSTALL ONLY)
- PROPOSED ITS RADIO ANTENNA
- PROPOSED SIGNAL CABINET

NOTES:

1. SHORT RUNS FROM THE GROUND BOXES TO THE SIGNAL / PEDESTRIAN FOUNDATIONS WILL NOT BE PAID DIRECTLY, BUT SUBSIDIARY TO VARIOUS BID ITEMS. FOR THE SIGNAL POLES, THIS WILL BE 2 (3") CONDUITS.
2. INSTALL TRAFFIC SIGNAL CONTROLLER FOUNDATION PER TS-CF DETAIL.
3. ALL ROAD BORES TO BE (2) 3" SCH 80.

STATE OF TEXAS — SCOTT R. ARNOLD — 96782 — LICENSED — PROFESSIONAL ENGINEER

Scott R. Arnold, P.E.

03/01/2021

Kimley»Horn F-928

© 2021

Texas Department of Transportation

PROPOSED TRAFFIC SIGNAL

AT TOWNE OAKS DRIVE

SHEET 2 OF 5

FED. RD. DIV. NO.	PROJECT ID.	HIGHWAY NO.
6	(SEE TITLE SHEET)	US 84

STATE	DIST.	COUNTY	SHEET NO.
TEXAS	WAC	MCLENNAN	240
CONT.	SECT.	JOB	
0055	15	072	

FILENAME: pw:\\kh-pw.bentley.com:kh-pw-01\Documents\01 Active Projects\TX-FTW-063586010 - US 84 (Waco Drive)\WAC 0055150721\4 - Design\Plan Set\8. Traffic\US84_SIG01_TO.dgn
PLOTTED: 12/21/2020

SIGNAL WIRING DETAIL

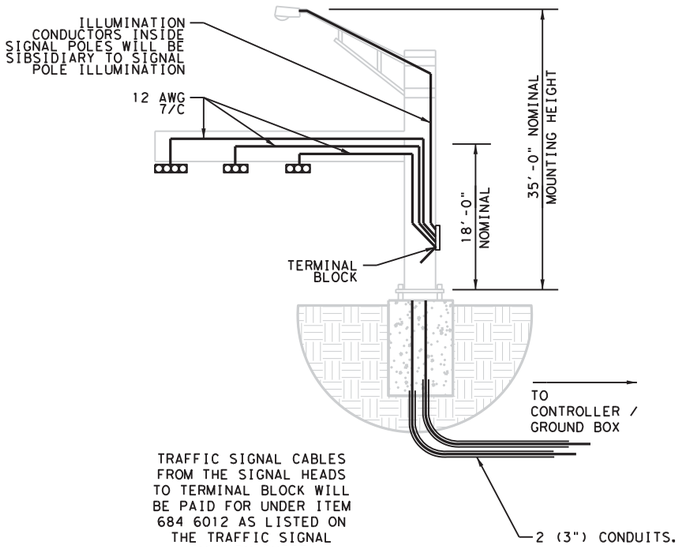

TRAFFIC SIGNAL CABLES FROM THE SIGNAL HEADS TO TERMINAL BLOCK WILL BE PAID FOR UNDER ITEM 684 6012 AS LISTED ON THE TRAFFIC SIGNAL SUMMARY SHEET.

EACH SIGNAL HEAD WILL BE WIRED TO TERMINAL BLOCK.

SIGNAL HEADS

PED SIGNAL HEADS P1, P2, P3, P4, P5, P6

SIGNAL HEADS #1, 8

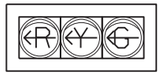

SIGNAL HEADS #2, 3, 4, 6, 7, 9, 10, 11, 13, 14

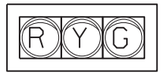

SIGNAL HEADS #5, 12

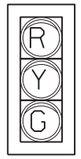

NOTES:

1. TY A SIGNS MOUNTED ON SIGNAL EQUIPMENT IS SHOWN FOR CONTRACTOR INFORMATION ONLY AND SUBSIDIARY TO ITEM 680 6002.

SIGNS

S3 S6

R10-3E(R)

9" X 15" TY A ALUM

(0.94 SQ FT) EACH

S5 S9 S10 S12

R10-3E(L)

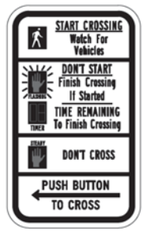

9" X 15" TY A ALUM

(0.94 SQ FT) EACH

S1 S7

R10-5

30" X 36" TY A ALUM

(7.5 SQ FT) EACH

S2 S8

D3-1G

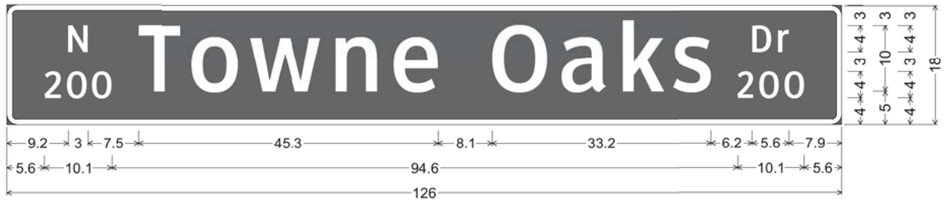

126" X 18" TY A ALUM

(15.75 SQ FT) EACH

D3-1G;
1.5" Radius, 0.8" Border, White on, Green;
"N", ClearviewHwy-3-W; "200", ClearviewHwy-3-W; "Towne Oaks", ClearviewHwy-3-W; "Dr", ClearviewHwy-3-W; "200", ClearviewHwy-3-W;

S11

D3-1G

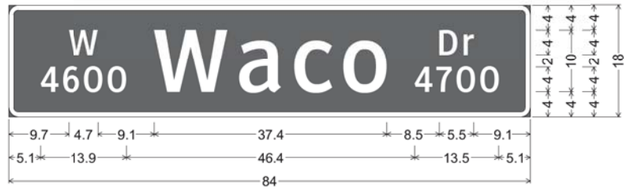

84" X 18" TY A ALUM

(10.5 SQ FT) EACH

D3-1G;
1.5" Radius, 0.8" Border, White on, Green;
"W", ClearviewHwy-3-W; "4600", ClearviewHwy-3-W; "Waco", ClearviewHwy-3-W; "Dr", ClearviewHwy-3-W; "4700", ClearviewHwy-3-W;

S4

D3-1G

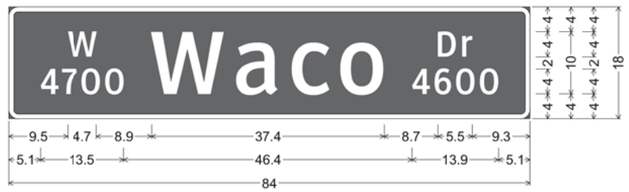

84" X 18" TY A ALUM

(10.5 SQ FT) EACH

D3-1G;
1.5" Radius, 0.8" Border, White on, Green;
"W", ClearviewHwy-3-W; "4700", ClearviewHwy-3-W; "Waco", ClearviewHwy-3-W; "Dr", ClearviewHwy-3-W; "4600", ClearviewHwy-3-W;

Scott K. Arnold, P.E.

03/01/2021

Kimley»Horn F-928

© 2021

Texas Department of Transportation

TRAFFIC SIGNAL SIGNS AND HEADS

AT TOWNE OAKS DRIVE

SHEET 3 OF 5

FED.RD. DIV.NO.	PROJECT ID.	HIGHWAY NO.
6	(SEE TITLE SHEET)	US 84

STATE	DIST.	COUNTY	SHEET NO.
TEXAS	WAC	MCLENNAN	
CONT.	SECT.	JOB	241
0055	15	072	

FILENAME: pw:\\kh-pw.bentley.com:kh-pw-01\Documents\01 Active Projects\TX-FTW-063586010 - US 84 (Waco Drive)\WAC 005515072\4 - Design\Plan Set\8. Traffic\US84_SIGSIGN01_TO.dgn
PLOTTED: 12/21/2020

PROJECT	US 84 (0055-15-072)
SHEET	242

			618 6047	618 6029	618 6054	620 6007	620 6008	620 6009	620 6010	684 6007	684 6012	684 6021	684 6049	6306 6007	OPTICOM CABLE	ITS RADIO CABLE
			CONDT (PVC) (SCH 80) (2") (BORE)	CONDT (PVC) (SCH 40) (3")	CONDT (PVC) (SCH 80) (3") (BORE)	ELEC CONDR (NO.8) BARE	ELEC CONDR (NO.8) INSULATED	ELEC CONDR (NO.6) BARE	ELEC CONDR (NO.6) INSULATED	TRF SIG CBL (TY A)(12 AWG)(2 CONDR)	TRF SIG CBL (TY A)(12 AWG)(7 CONDR)	TRF SIG CBL (TY A)(12 AWG)(16 CONDR)	TRF SIG CBL (TY A)(16 AWG)(3 CONDR)	VIVDS CABLING	FOR CONTRACTOR INFO ONLY	FOR CONTRACTOR INFO ONLY
TRF ID	TABLE	Location	LF	LF	LF	LF	LF	LF	LF	LF	LF	LF	LF	LF	LF	LF
CONDUIT R01	CONDUIT	TRENCH		25		25				25			25			
CONDUIT R02-1	CONDUIT	BORE			75	75				150		150	150	150	150	
CONDUIT R02-2	CONDUIT	BORE			75	75										
CONDUIT R03	CONDUIT	TRENCH		25		25				25			25			
CONDUIT R04-1	CONDUIT	BORE			150	150										
CONDUIT R04-2	CONDUIT	BORE			150	150				600		450	450	450	450	
CONDUIT R05	CONDUIT	TRENCH		15		15				30			30			
CONDUIT R06-1	CONDUIT	BORE			15	15	30			90		75	60	60	60	15
CONDUIT R06-2	CONDUIT	BORE			15	15										
CONDUIT R07-1	CONDUIT	BORE			45	45	90			270		180	225	180	180	45
CONDUIT R07-2	CONDUIT	BORE			45	45										
CONDUIT R08	CONDUIT	TRENCH		20			40	20	40							
CONDUIT R09*	CONDUIT	BORE	50													
CONDUIT R10	CONDUIT	TRENCH		10		10				10			10			
CONDUIT R11-1	CONDUIT	BORE			155	155				155		155	155	155	155	
CONDUIT R11-2	CONDUIT	BORE			155	155										
PED POLE A	CONDUIT	IN PED POLE								5			10			
PED POLE B	CONDUIT	IN PED POLE								10						
PED POLE C	CONDUIT	IN PED POLE								10			20			
PED POLE D	CONDUIT	IN PED POLE								5			10			
SIGNAL POLE A	CONDUIT	IN SIGNAL POLE									265			40	50	
SIGNAL POLE B	CONDUIT	IN SIGNAL POLE									100		20	50	40	
SIGNAL POLE C	CONDUIT	IN SIGNAL POLE									275			45	35	30
SIGNAL POLE D	CONDUIT	IN SIGNAL POLE									80			20	20	
Grand Total			50	95	880	955	160	20	40	1385	720	1010	1190	1150	1140	90

*CONDUIT RUN 9 SHALL INCLUDE A SWEEPING 90° PVC AND SHALL STUB UP AT BOTTOM OF ONCOR POLE.

FILENAME: pw:\\kh-pw.bentley.com:kh-pw-01\Documents\01 Active Projects\TX-FTW-063586010 - US 84 (Waco Drive)\WAC 00551507\4 - Design\Plan Set\8. Traffic\US84_CONSUM01_TO.dgn
PLOTTED: 12/21/2020

SCOTT R. ARNOLD 96782 LICENSED PROFESSIONAL ENGINEER STATE OF TEXAS

Scott R. Arnold, P.E.

12/21/2020

Kimley»Horn F-928

© 2021

Texas Department of Transportation

CONDUIT AND CONDUCTOR SUMMARY

AT TOWNE OAKS DRIVE

SHEET 4 OF 5

FED.RD. DIV.NO.	PROJECT ID.	HIGHWAY NO.
6	(SEE TITLE SHEET)	US 84

STATE	DIST.	COUNTY	SHEET NO.
TEXAS	WAC	MCLENNAN	242
CONT.	SECT.	JOB	
0055	15	072	

PROJECT	US 84 (0055-15-072)												
SHEET	243												
		624 6010	628 6144	680 6002	680 6004	682 6018	688 6001	688 6003	6062 6038	6306 6001	6306 6002	CABINET	OPTICOM	TY A SIGN
		GROUND BOX TY D (162922)W/APRON	ELC SRV TY D 120/240 060(NS)SS(E)PS(U)	INSTALL HWY TRF SIG (ISOLATED)	REMOVING TRAFFIC SIGNALS	PED SIG SEC (LED)(COUNTDOWN)	PED DETECTOR PUSH BUTTON (APS)	PED DETECTOR CONTROLLER UNIT	ITS RADIO (DUAL)(5 GHZ/5 GHZ)-C-U	VIVDS PROSR SYS	VIVDS CAM ASSY FXD LNS	TxDOT CABINET AND CONTROLLER	FOR CONTRACTOR INFO ONLY	FOR CONTRACTOR INFO ONLY
TRF ID	TABLE	EA	EA	EA	EA	EA	EA	EA	EA	EA	EA	EA	EA	SF
CABINET	MISCELLANEOUS											1		
GROUND BOX	MISCELLANEOUS	7												
ITS RADIO	MISCELLANEOUS								1					
OPTICOM	MISCELLANEOUS												4	
P1	MISCELLANEOUS					1								
P2	MISCELLANEOUS					1								
P3	MISCELLANEOUS					1								
P4	MISCELLANEOUS					1								
P5	MISCELLANEOUS					1								
P6	MISCELLANEOUS					1								
PED	MISCELLANEOUS						6	1						
SERVICE	MISCELLANEOUS		1											
SIGN	MISCELLANEOUS													70
SIGNAL	MISCELLANEOUS			1	1									
VIVDS	MISCELLANEOUS									1	4			
Grand Total		7	1	1	1	6	6	1	1	1	4	1	4	70

PROJECT	US 84 (0055-15-072)							
SHEET	243							
		682 6001	682 6002	682 6003	682 6004	682 6005	682 6006	682 6054
		VEH SIG SEC (12")LED(GRN)	VEH SIG SEC (12")LED(GRN ARW)	VEH SIG SEC (12")LED(YEL)	VEH SIG SEC (12")LED(YEL ARW)	VEH SIG SEC (12")LED(RED)	VEH SIG SEC (12")LED(RED ARW)	BACKPLATE W/REF BRDR(3 SEC)(VENT)ALUM
TRF ID	TABLE	EA	EA	EA	EA	EA	EA	EA
SIGNAL HEAD 01	SIGNAL HEAD		1		1		1	1
SIGNAL HEAD 02	SIGNAL HEAD	1		1		1		1
SIGNAL HEAD 03	SIGNAL HEAD	1		1		1		1
SIGNAL HEAD 04	SIGNAL HEAD	1		1		1		1
SIGNAL HEAD 05	SIGNAL HEAD	1		1		1		1
SIGNAL HEAD 06	SIGNAL HEAD	1		1		1		1
SIGNAL HEAD 07	SIGNAL HEAD	1		1		1		1
SIGNAL HEAD 08	SIGNAL HEAD		1		1		1	1
SIGNAL HEAD 09	SIGNAL HEAD	1		1		1		1
SIGNAL HEAD 10	SIGNAL HEAD	1		1		1		1
SIGNAL HEAD 11	SIGNAL HEAD	1		1		1		1
SIGNAL HEAD 12	SIGNAL HEAD	1		1		1		1
SIGNAL HEAD 13	SIGNAL HEAD	1		1		1		1
SIGNAL HEAD 14	SIGNAL HEAD	1		1		1		1
Grand Total		12	2	12	2	12	2	14

PROJECT	US 84 (0055-15-072)					
SHEET	243					
		686 6025	686 6037	686 6065	686 6067	687 6001	687 6002
		INS TRF SIG PL AM (S)1 ARM(24')	INS TRF SIG PL AM(S)1 ARM(36')	INS TRF SIG PL AM(S)1 ARM(65')	INS TRF SIG PL AM(S)1 ARM(65')LUM	PED POLE ASSEMBLY	PEDESTRIAN PUSH BUTTON POLE
TRF ID	TABLE	EA			EA	EA	EA
PED POLE A	POLE					1	
PED POLE B	POLE						1
PED POLE C	POLE					1	
PED POLE D	POLE					1	
TRAFFIC SIGNAL POLE A	POLE			1			
TRAFFIC SIGNAL POLE B	POLE		1				
TRAFFIC SIGNAL POLE C	POLE				1		
TRAFFIC SIGNAL POLE D	POLE	1					
Grand Total		1	1	1	1	3	1

PROJECT	US 84 (0055-15-072)				
SHEET	243				
		PED POLE FND	416 6031	416 6032	416 6034
		FOR CONTRACTOR INFO ONLY	DRILL SHAFT (TRF SIG POLE) (30 IN)	DRILL SHAFT (TRF SIG POLE) (36 IN)	DRILL SHAFT (TRF SIG POLE) (48 IN)
TRF ID	TABLE	LF	LF	LF	LF
PED POLE FND A	FOUNDATIONS	5.7			
PED POLE FND B	FOUNDATIONS	5.7			
PED POLE FND C	FOUNDATIONS	5.7			
PED POLE FND D	FOUNDATIONS	5.7			
SIGNAL POLE FND A	FOUNDATIONS				21.9
SIGNAL POLE FND B	FOUNDATIONS			13.2	
SIGNAL POLE FND C	FOUNDATIONS				21.9
SIGNAL POLE FND D	FOUNDATIONS		11.3		
Grand Total		22.8	11.3	13.2	43.8

FILENAME: pw:\\kh-pw.bentley.com:kh-pw-01\Documents\01 Active Projects\TX-FTW-063586010 - US 84 (Waco Drive)\WAC 005515072\4 - Design\Plan Set\8. Traffic\US84_SIGSUM01_TO.dgn
PLOTTED: 12/21/2020

Scott R. Arnold, P.E.

03/01/2021

Kimley»Horn F-928

© 2021

Texas Department of Transportation

TRAFFIC SIGNAL SUMMARY

AT TOWNE OAKS DRIVE

SHEET 5 OF 5

FED. RD. DIV. NO.	PROJECT ID.	HIGHWAY NO.
6	(SEE TITLE SHEET)	US 84

STATE	DIST.	COUNTY	SHEET NO.
TEXAS	WAC	MCLENNAN	243
CONT.	SECT.	JOB	
0055	15	072	

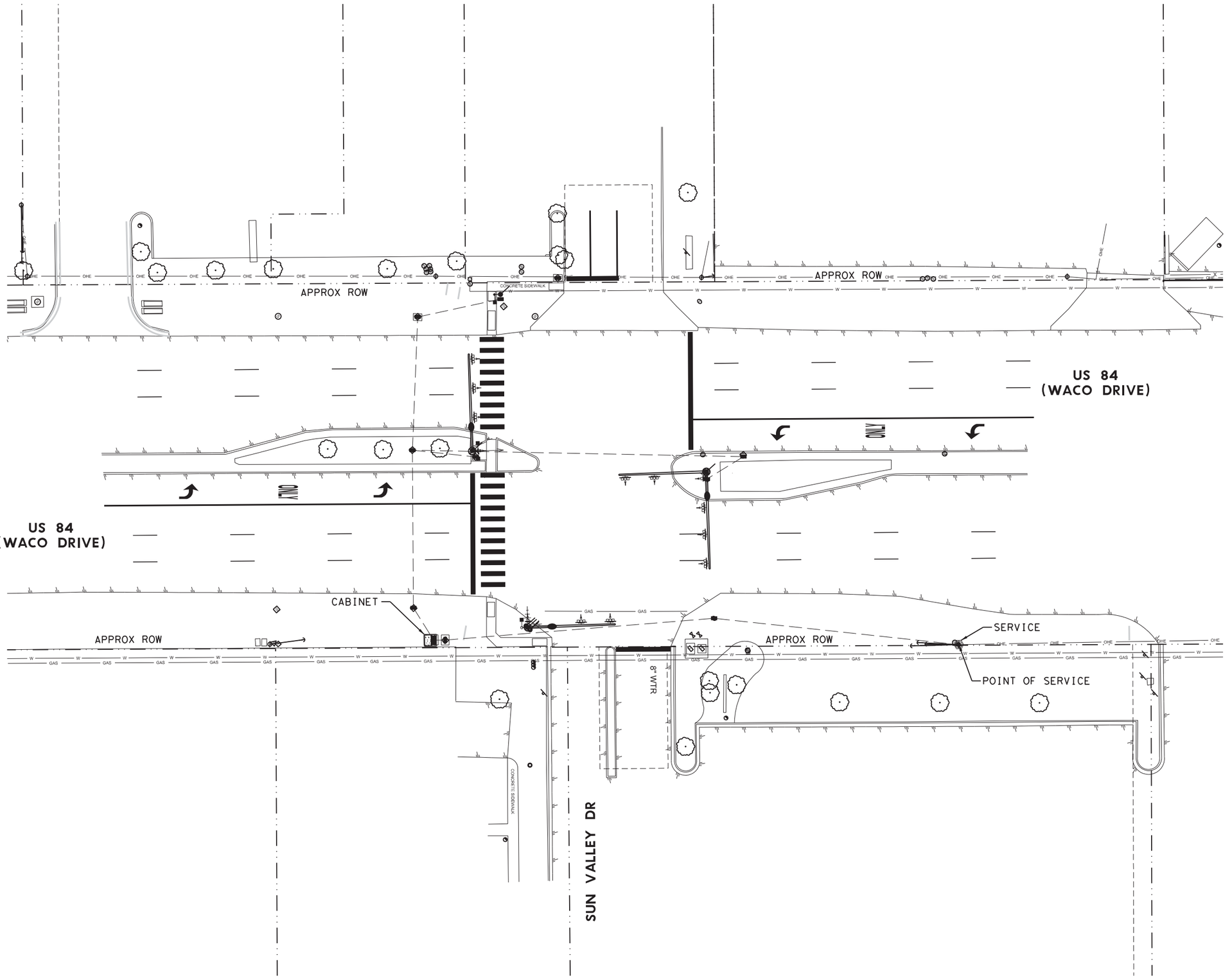

0' 20' 40'

LEGEND

- POINT OF SERVICE
- ELECTRICAL SERVICE
- CONDUIT, PVC
- GROUND BOX

NOTES

1. THE LOCATIONS SHOWN AS EXISTING CONDUIT RUNS ARE APPROXIMATE. THE EXACT LOCATION WILL BE DETERMINED IN THE FIELD. NO EXISTING CONDUIT WILL BE USED, SEE PROPOSED TRAFFIC SIGNAL SHEETS.

STATE OF TEXAS — SCOTT R. ARNOLD — 96782 — LICENSED — PROFESSIONAL ENGINEER

Scott R. Arnold, P.E.

12/21/2020

Kimley»Horn F-928

© 2021

Texas Department of Transportation

CONDITION DIAGRAM

AT SUN VALLEY DRIVE

SHEET 1 OF 5

FED.RD. DIV.NO.	PROJECT ID.	HIGHWAY NO.
6	(SEE TITLE SHEET)	US 84

STATE	DIST.	COUNTY	SHEET NO.
TEXAS	WAC	MCLENNAN	244
CONT.	SECT.	JOB	
0055	15	072	

FILENAME: pw:\\kh-pw.bentley.com:kh-pw-01\Documents\01 Active Projects\TX-FTW-063586010 - US 84 (Waco Drive)\WAC 0055150721\4 - Design\Plan Set\8. Traffic\US84_EXCON_SV.dgn
PLOTTED: 12/21/2020

CONTRACTOR'S INFO ONLY

BORE PIT REMOVAL/REPLACEMENT QUANTITIES
WITHIN TEMPORARY RIGHT OF ENTRY:
*25 SF OF BLOCK SODDING ON SE CORNER

PROPOSED RING AND STRUCTURE

Ø1	Ø2 WALK	Ø3 NOT USED	Ø4 WALK
Ø5	Ø6 WALK	Ø7 NOT USED	Ø8 WALK

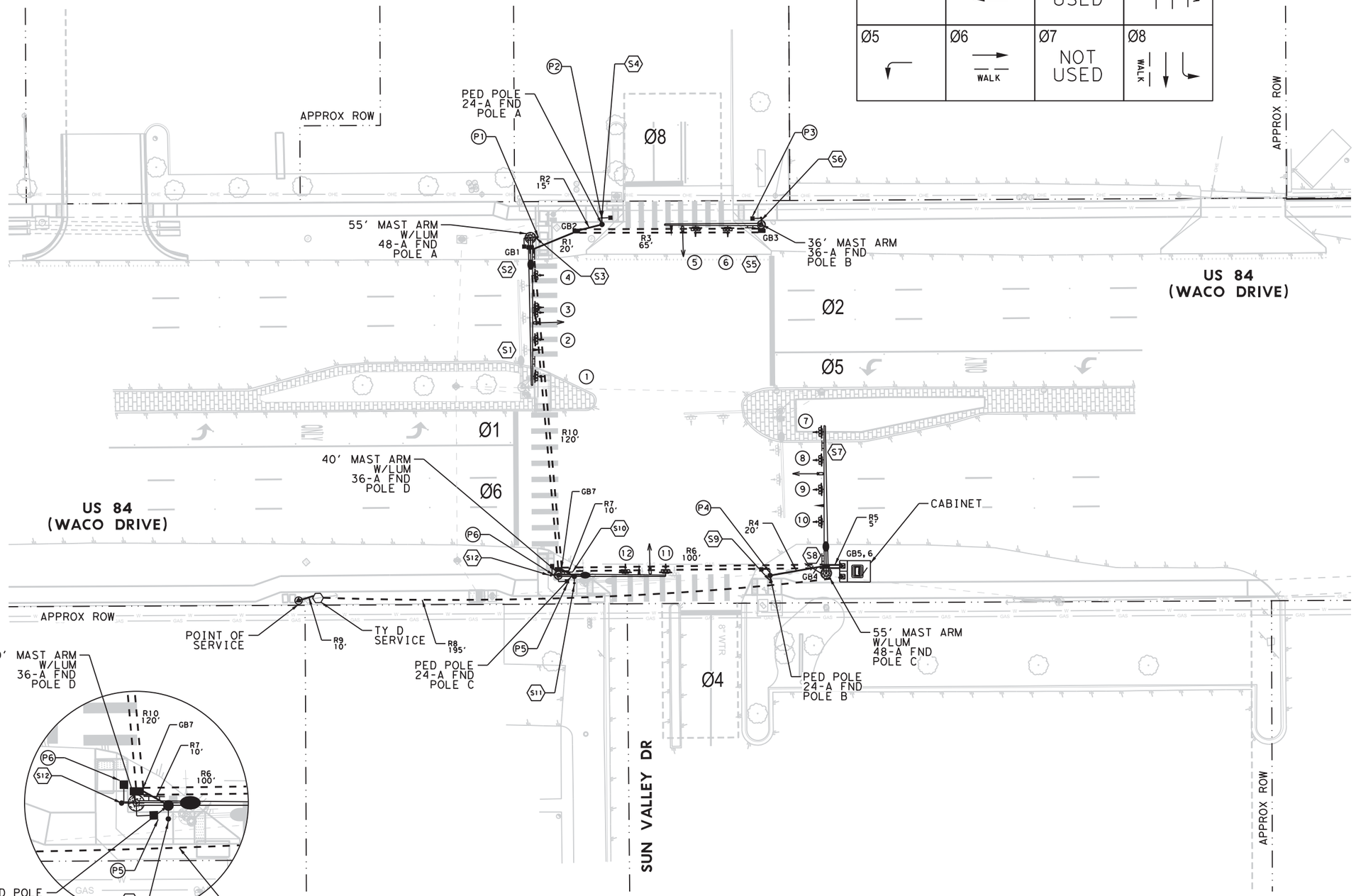

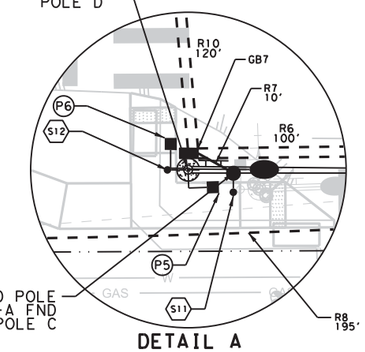

DETAIL A
SW CORNER
US 84 AT SUN VALLEY DR
NTS

ELECTRICAL SERVICE DATA											
Electrical Service ID	Plan Sheet Number	Electrical Service Description	Service Conduit Size	Service Conductors No./Size	Safety Switch Amps	Main Ckt. Bkr. Pole/Amps	Two-Pole Contactor Amps	Panelbed/ Loadcenter Amp Rating	Branch Circuit ID	Branch Ckt. Bkr. Pole/Amps	Branch Circuit Amps	KVA Load
ES-04	245	ELEC SRV TY D 120/240 060 (NS)SS(E)PS(U)	2"	3/#6	N/A	2P/60	30	100	Sig. Controller	1P/30	34.1	4.9
									Luminaires	2P/15	6.94	

0' 20' 40'

LEGEND

- EXISTING POINT OF SERVICE
- PROPOSED ELECTRICAL SERVICE
- PROPOSED CONDUIT, PVC
- PROPOSED CONDUIT, BORE
- PROPOSED VIVDS
- PROPOSED GROUND BOX (TY D)
- PROPOSED LED COUNTDOWN & APS
- PROPOSED LUMINAIRE
- PROPOSED SIGNAL POLE ASSEMBLY
- PROPOSED OPTICOM DETECTOR (INSTALL ONLY)
- PROPOSED ITS RADIO ANTENNA
- PROPOSED SIGNAL CABINET

NOTES:

1. SHORT RUNS FROM THE GROUND BOXES TO THE SIGNAL / PEDESTRIAN FOUNDATIONS WILL NOT BE PAID DIRECTLY, BUT SUBSIDIARY TO VARIOUS BID ITEMS. FOR THE SIGNAL POLES, THIS WILL BE 2 (3") CONDUITS.
2. INSTALL TRAFFIC SIGNAL CONTROLLER FOUNDATION PER TS-CF DETAIL.
3. ALL ROAD BORES TO BE (2) 3" SCH 80.

STATE OF TEXAS 96782 LICENSED PROFESSIONAL ENGINEER
Scott R. Arnold, P.E.
03/01/2021

Kimley»Horn F-928

© 2021
Texas Department of Transportation

PROPOSED TRAFFIC SIGNAL

AT SUN VALLEY DRIVE

SHEET 2 OF 5

FED.RD. DIV.NO.	PROJECT ID.	HIGHWAY NO.
6	(SEE TITLE SHEET)	US 84

STATE	DIST.	COUNTY	SHEET NO.
TEXAS	WAC	MCLENNAN	245
CONT.	SECT.	JOB	
0055	15	072	

FILENAME: pw:\\kh-pw.bentley.com:kh-pw-01\Documents\01 Active Projects\TX-FTW-063586010 - US 84 (Waco Drive)\WAC 0055150724 - Design\Plan Set\8. Traffic\US84_SIG01_SV.dgn
PLOTTED: 12/21/2020

SIGNAL WIRING DETAIL

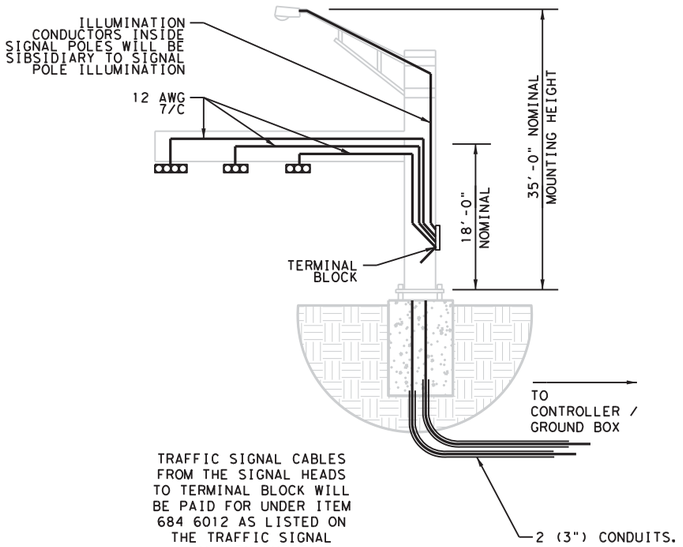

TRAFFIC SIGNAL CABLES FROM THE SIGNAL HEADS TO TERMINAL BLOCK WILL BE PAID FOR UNDER ITEM 684 6012 AS LISTED ON THE TRAFFIC SIGNAL SUMMARY SHEET.

EACH SIGNAL HEAD WILL BE WIRED TO TERMINAL BLOCK.

SIGNAL HEADS

PED SIGNAL HEADS P1, P2, P3, P4, P5, P6

SIGNAL HEADS #1, 7

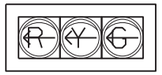

SIGNAL HEADS #2, 3, 4, 5, 6, 8, 9, 10, 11, 12

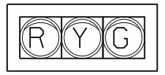

NOTES:

1. TY A SIGNS MOUNTED ON SIGNAL EQUIPMENT IS SHOWN FOR CONTRACTOR INFORMATION ONLY AND SUBSIDIARY TO ITEM 680 6002.

SIGNS

S6 S11 S12

R10-3E(R)

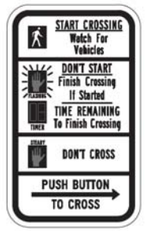

9" X 15"
TY A
ALUM

(0.94 SQ FT)
EACH

S3 S4 S9

R10-3E(L)

9" X 15"
TY A
ALUM

(0.94 SQ FT)
EACH

S1 S7

R10-5

30" X 36"
TY A
ALUM

(7.5 SQ FT)
EACH

S2

D3-1G

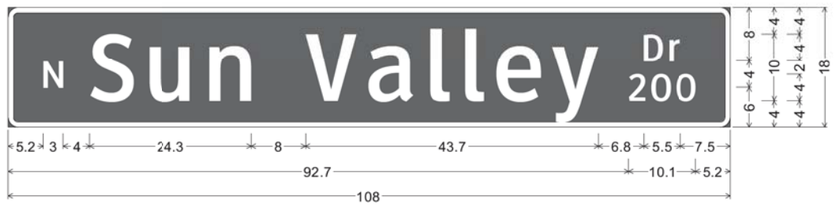

114" X 18"
TY A
ALUM

(15 SQ FT)
EACH

D3-1G;
1.5" Radius, 0.8" Border, White on, Green;
"N", ClearviewHwy-3-W; "Sun Valley", ClearviewHwy-3-W; "Dr", ClearviewHwy-3-W;
"200", ClearviewHwy-3-W;

S8

D3-1G

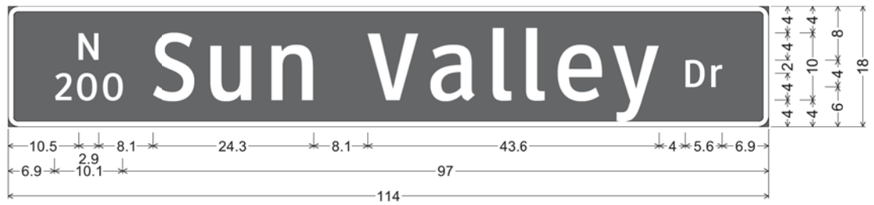

108" X 18"
TY A
ALUM

(14 SQ FT)
EACH

D3-1G;
1.5" Radius, 0.8" Border, White on, Green;
"N", ClearviewHwy-3-W; "200", ClearviewHwy-3-W; "Sun Valley", ClearviewHwy-3-W; "Dr", ClearviewHwy-3-W;

S5

D3-1G

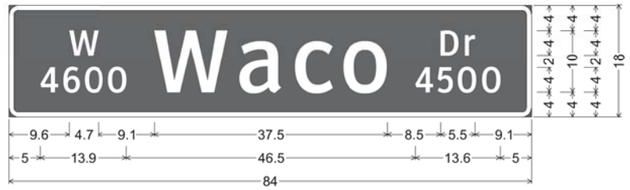

84" X 18"
TY A
ALUM

(10.5 SQ FT)
EACH

D3-1G;
1.5" Radius, 0.8" Border, White on, Green;
"W", ClearviewHwy-3-W; "4600", ClearviewHwy-3-W; "Waco", ClearviewHwy-3-W;
"Dr", ClearviewHwy-3-W; "4500", ClearviewHwy-3-W;

S10

D3-1G

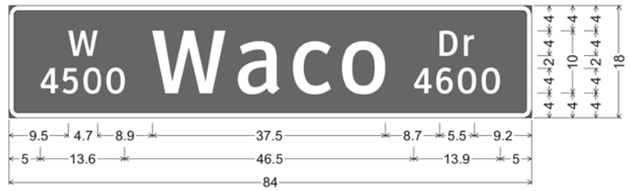

84" X 18"
TY A
ALUM

(10.5 SQ FT)
EACH

D3-1G;
1.5" Radius, 0.8" Border, White on, Green;
"W", ClearviewHwy-3-W; "4500", ClearviewHwy-3-W; "Waco", ClearviewHwy-3-W;
"Dr", ClearviewHwy-3-W; "4600", ClearviewHwy-3-W;

Scott K. Arnold, P.E.

03/01/2021

Kimley»Horn F-928

© 2021

Texas Department of Transportation

TRAFFIC SIGNAL SIGNS AND HEADS

AT SUN VALLEY DRIVE

SHEET 3 OF 5

FED.RD. DIV.NO.	PROJECT ID.	HIGHWAY NO.
6	(SEE TITLE SHEET)	US 84

STATE	DIST.	COUNTY	SHEET NO.
TEXAS	WAC	MCLENNAN	246
CONT.	SECT.	JOB	
0055	15	072	

FILENAME: pw:\\kh-pw.bentley.com:kh-pw-01\Documents\01 Active Projects\TX-FTW-063586010 - US 84 (Waco Drive)\WAC 005515072\4 - Design\Plan Set\8. Traffic\US84_SIGSIGN01_SV.dgn
PLOTTED: 12/21/2020

PROJECT	US 84 (0055-15-072)
SHEET	247

			618 6046	618 6029	618 6054	620 6007	620 6008	620 6009	620 6010	684 6007	684 6012	684 6021	684 6049	6306 6007	OPTICOM CABLE	ITS RADIO CABLE
			CONDT (PVC) (SCH 80) (2")	CONDT (PVC) (SCH 40) (3")	CONDT (PVC) (SCH 80) (3") (BORE)	ELEC CONDR (NO.8) BARE	ELEC CONDR (NO.8) INSULATED	ELEC CONDR (NO.6) BARE	ELEC CONDR (NO.6) INSULATED	TRF SIG CBL (TY A)(12 AWG)(2 CONDR)	TRF SIG CBL (TY A)(12 AWG)(7 CONDR)	TRF SIG CBL (TY A)(12 AWG)(16 CONDR)	TRF SIG CBL (TY A)(16 AWG)(3 CONDR)	VIVDS CABLING	FOR CONTRACTOR INFO ONLY	FOR CONTRACTOR INFO ONLY
TRF ID	TABLE	Location	LF	LF	LF	LF	LF	LF	LF	LF	LF	LF	LF	LF	LF	LF
CONDUIT R01-1	CONDUIT	TRENCH		20		20				40		20	20	20	20	
CONDUIT R02	CONDUIT	TRENCH		15		15				15			15			
CONDUIT R03-1	CONDUIT	BORE			65	65				65		65		65	65	
CONDUIT R03-2	CONDUIT	BORE			65	65										
CONDUIT R04	CONDUIT	TRENCH		20		20				20			20			
CONDUIT R05-1	CONDUIT	TRENCH		5		5				30		20	10	20	20	5
CONDUIT R05-2	CONDUIT	TRENCH		5		5	20									
CONDUIT R06-1	CONDUIT	BORE			100	100	200			500		300	100	300	300	
CONDUIT R06-2	CONDUIT	BORE			100	100										
CONDUIT R07	CONDUIT	TRENCH		10		10				10						
CONDUIT R08	CONDUIT	BORE		195			390	195	390							
CONDUIT R09*	CONDUIT	TRENCH	10													
CONDUIT R10-1	CONDUIT	BORE			120	120				360		240	120	240	240	
CONDUIT R10-2	CONDUIT	BORE			120	120	240									
PED POLE A	CONDUIT	IN PED POLE								5			10			
PED POLE B	CONDUIT	IN PED POLE								5			10			
PED POLE C	CONDUIT	IN PED POLE								5						
SIGNAL POLE A	CONDUIT	IN SIGNAL POLE								5	215		10	55	65	
SIGNAL POLE B	CONDUIT	IN SIGNAL POLE								5	80		10	50	55	
SIGNAL POLE C	CONDUIT	IN SIGNAL POLE									230			60	50	
SIGNAL POLE D	CONDUIT	IN SIGNAL POLE								5	105		20	55	50	30
Grand Total			10	270	570	645	850	195	390	1070	630	645	345	865	865	35

*CONDUIT RUN 9 SHALL INCLUDE A SWEEPING 90° PVC AND SHALL STUB UP AT BOTTOM OF ONCOR POLE.

FILENAME: pw:\\kh-pw.bentley.com:kh-pw-01\Documents\01 Active Projects\TX-FTW-063586010 - US 84 (Waco Drive)\WAC 0055150721\4 - Design\Plan Set\8. Traffic\US84_CONSUM01_SV.dgn
PLOTTED: 12/21/2020

Scott R. Arnold, P.E.
12/21/2020

Kimley»Horn F-928

© 2021

Texas Department of Transportation

CONDUIT AND CONDUCTOR SUMMARY

AT SUN VALLEY DRIVE

SHEET 4 OF 5

FED.RD. DIV.NO.	PROJECT ID.	HIGHWAY NO.
6	(SEE TITLE SHEET)	US 84

STATE	DIST.	COUNTY	SHEET NO.
TEXAS	WAC	MCLENNAN	247
CONT.	SECT.	JOB	
0055	15	072	

PROJECT	US 84 (0055-15-072)												
SHEET	248												
		624 6010	628 6144	680 6002	680 6004	682 6018	688 6001	688 6003	6062 6038	6306 6001	6306 6002	CABINET	OPTICOM	TY A SIGN
		GROUND BOX TY D (162922)W/APRON	ELC SRV TY D 120/240 060(NS)SS(E)PS(U)	INSTALL HWY TRF SIG (ISOLATED)	REMOVING TRAFFIC SIGNALS	PED SIG SEC (LED)(COUNTDOWN)	PED DETECT PUSH BUTTON(APS)	PED DETECTOR CONTROLLER UNIT	ITS RADIO (DUAL)(5 GHZ/5 GHZ)-C-U	VIVDS PROSR SYS	VIVDS CAM ASSY FXD LNS	TxDOT CABINET AND CONTROLLER	FOR CONTRACTOR INFO ONLY	FOR CONTRACTOR INFO ONLY
TRF ID	TABLE	EA	EA	EA	EA	EA	EA	EA	EA	EA	EA	EA	EA	SF
CABINET	MISCELLANEOUS											1		
GROUND BOX	MISCELLANEOUS	7												
ITS RADIO	MISCELLANEOUS								1					
OPTICOM	MISCELLANEOUS												4	
P1	MISCELLANEOUS					1								
P2	MISCELLANEOUS					1								
P3	MISCELLANEOUS					1								
P4	MISCELLANEOUS					1								
P5	MISCELLANEOUS					1								
P6	MISCELLANEOUS					1								
PED	MISCELLANEOUS						6	1						
SERVICE	MISCELLANEOUS		1											
SIGN	MISCELLANEOUS													73
SIGNAL	MISCELLANEOUS			1	1									
VIVDS	MISCELLANEOUS									1	4			
Grand Total		7	1	1	1	6	6	1	1	1	4	1	4	73

PROJECT	US 84 (0055-15-072)							
SHEET	248							
		682 6001	682 6002	682 6003	682 6004	682 6005	682 6006	682 6054
		VEH SIG SEC (12")LED(GRN)	VEH SIG SEC (12")LED(GRN ARW)	VEH SIG SEC (12")LED(YEL)	VEH SIG SEC (12")LED(YEL ARW)	VEH SIG SEC (12")LED(RED)	VEH SIG SEC (12")LED(RED ARW)	BACKPLATE W/REF BRDR(3 SEC)(VENT)ALUM
TRF ID	TABLE	EA	EA	EA	EA	EA	EA	EA
SIGNAL HEAD 01	SIGNAL HEAD		1		1		1	1
SIGNAL HEAD 02	SIGNAL HEAD	1		1		1		1
SIGNAL HEAD 03	SIGNAL HEAD	1		1		1		1
SIGNAL HEAD 04	SIGNAL HEAD	1		1		1		1
SIGNAL HEAD 05	SIGNAL HEAD	1		1		1		1
SIGNAL HEAD 06	SIGNAL HEAD	1		1		1		1
SIGNAL HEAD 07	SIGNAL HEAD		1		1		1	1
SIGNAL HEAD 08	SIGNAL HEAD	1		1		1		1
SIGNAL HEAD 09	SIGNAL HEAD	1		1		1		1
SIGNAL HEAD 10	SIGNAL HEAD	1		1		1		1
SIGNAL HEAD 11	SIGNAL HEAD	1		1		1		1
SIGNAL HEAD 12	SIGNAL HEAD	1		1		1		1
Grand Total		10	2	10	2	10	2	12

PROJECT	US 84 (0055-15-072)				
SHEET	248				
		686 6037	686 6043	0686 6059	687 6001	687 6002
		INS TRF SIG PL AM(S)1 ARM(36')	INS TRF SIG PL AM(S)1 ARM(40')LUM	INS TRF SIG PL AM(S)1 ARM(55')LUM	PED POLE ASSEMBLY	PEDESTRIAN PUSH BUTTON POLE
TRF ID	TABLE	EA	EA	EA	EA	EA
PED POLE A	POLE				1	
PED POLE B	POLE				1	
PED POLE C	POLE					1
TRAFFIC SIGNAL POLE A	POLE			1		
TRAFFIC SIGNAL POLE B	POLE	1				
TRAFFIC SIGNAL POLE C	POLE			1		
TRAFFIC SIGNAL POLE D	POLE		1			
Grand Total		1	1	2	2	1

PROJECT	US 84 (0055-15-072)			
SHEET	248			
		PED POLE FND	416 6032	416 6034
		FOR CONTRACTOR INFO ONLY	DRILL SHAFT (TRF SIG POLE) (36 IN)	DRILL SHAFT (TRF SIG POLE) (48 IN)
TRF ID	TABLE	LF	LF	LF
PED POLE FND A	FOUNDATIONS	5.7		
PED POLE FND B	FOUNDATIONS	5.7		
PED POLE FND C	FOUNDATIONS	5.7		
SIGNAL POLE FND A	FOUNDATIONS			21.9
SIGNAL POLE FND B	FOUNDATIONS		13.2	
SIGNAL POLE FND C	FOUNDATIONS			21.9
SIGNAL POLE FND D	FOUNDATIONS		13.2	
Grand Total		17.1	26.4	43.8

Scott R. Arnold, P.E.

03/01/2021

Kimley»Horn F-928

© 2021

Texas Department of Transportation

TRAFFIC SIGNAL SUMMARY

AT SUN VALLEY DRIVE

SHEET 5 OF 5

FED. RD. DIV. NO.	PROJECT ID.	HIGHWAY NO.
6	(SEE TITLE SHEET)	US 84

STATE	DIST.	COUNTY	SHEET NO.
TEXAS	WAC	MCLENNAN	248
CONT.	SECT.	JOB	
0055	15	072	

FILENAME: pw:\\kh-pw.bentley.com:kh-pw-01\Documents\01 Active Projects\TX-FTW-063586010 - US 84 (Waco Drive)\WAC 005515072\4 - Design\Plan Set\8. Traffic\US84_SIGSUM01_SV.dgn
PLOTTED: 12/21/2020

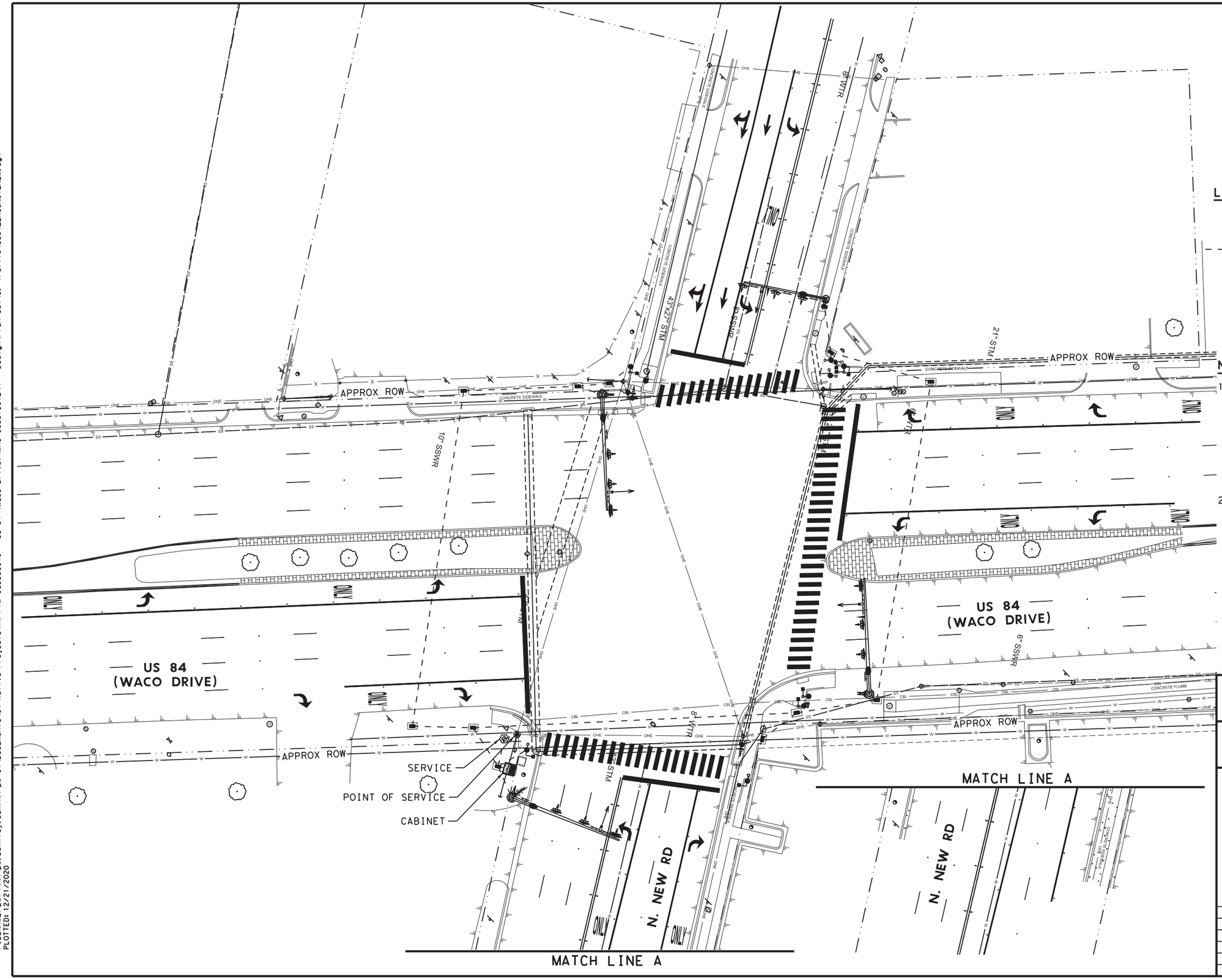

0' 20' 40'

LEGEND

- POINT OF SERVICE
- ELECTRICAL SERVICE
- CONDUIT, PVC
- GROUND BOX

NOTES:

1. THE LOCATIONS SHOWN AS EXISTING CONDUIT ARE APPROXIMATE. THE EXACT LOCATION WILL BE DETERMINED IN THE FIELD. SOME OF THE EXISTING CONDUIT WILL BE USED. SEE PROPOSED TRAFFIC SIGNAL SHEETS.
2. THE EXISTING SIGNAL SHALL REMAIN. REFER TO PROPOSED TRAFFIC SIGNAL SHEET FOR MODIFICATIONS TO EXISTING TRAFFIC SIGNAL.

STATE OF TEXAS · 96782 · LICENSED · PROFESSIONAL

Scott R. Arnold, P.E.

12/21/2020

Kimley»Horn F-928

© 2021

Texas Department of Transportation

CONDITION DIAGRAM

AT N. NEW ROAD

SHEET 1 OF 5

FED. RD. DIV. NO.	PROJECT ID.	HIGHWAY NO.
6	(SEE TITLE SHEET)	US 84

STATE	DIST.	COUNTY	SHEET NO.
TEXAS	WAC	MCLENNAN	249
CONT.	SECT.	JOB	
0055	15	072	

FILENAME: pw:\\kh-pw.bentley.com:kh-pw-01\Documents\01 Active Projects\TX-FTW-063586010 - US 84 (Waco Drive)\WAC 005515072\4 - Design\Plan Set\8. Traffic\US84_EXCON01_NEW.dgn
PLOTTED: 12/21/2020

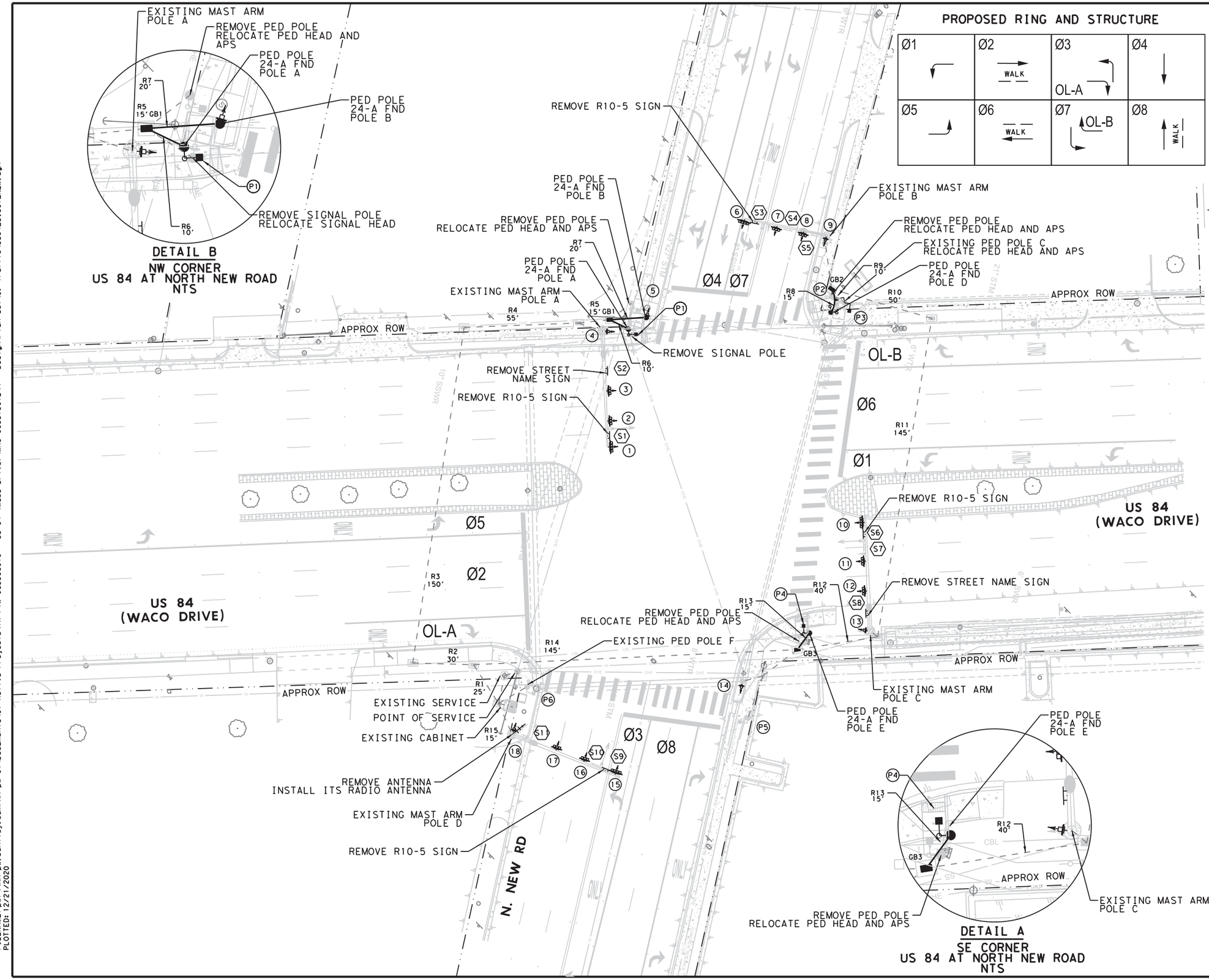

NOTES:

1. SHORT RUNS FROM THE GROUND BOXES TO THE SIGNAL / PEDESTRIAN POLES AND SIGNAL CABINET FOUNDATIONS WILL NOT BE PAID DIRECTLY, BUT SUBSIDIARY TO VARIOUS BID ITEMS.
2. RECONSTRUCT ANY SIDEWALK DESTROYED BY CONSTRUCTION PROCESS.
3. EXISTING SIGNAL CABINET TO BE USED.
4. EXISTING CONDUITS TO BE USED WHEREVER POSSIBLE.
5. CONTRACTOR SHALL REMOVE AND REPLACE SIGNAL CONTROLLER UNIT. THE PRICE OF REMOVAL AND INSTALL SHALL BE SUBSIDIARY TO ITEM 680 6011.

STATE OF TEXAS — SCOTT R. ARNOLD — 96782 — LICENSED PROFESSIONAL ENGINEER

Scott R. Arnold, P.E.

12/21/2020

Kimley»Horn F-928

© 2021

Texas Department of Transportation

PROPOSED TRAFFIC SIGNAL

AT N. NEW ROAD

SHEET 2 OF 5

FED.RD. DIV.NO.	PROJECT ID.	HIGHWAY NO.
6	(SEE TITLE SHEET)	US 84

STATE	DIST.	COUNTY	SHEET NO.
TEXAS	WAC	MCLENNAN	250
CONT.	SECT.	JOB	
0055	15	072	

FILENAME: pw:\\kh-pw.bentley.com:kh-pw-01\Documents\01 Active Projects\TX-FTW-063586010 - US 84 (Waco Drive)\WAC 005515072\4 - Design\Plan Set\8. Traffic\US84_SIG01_NEW.dgn
PLOTTED: 12/21/2020

SIGNAL WIRING DETAIL

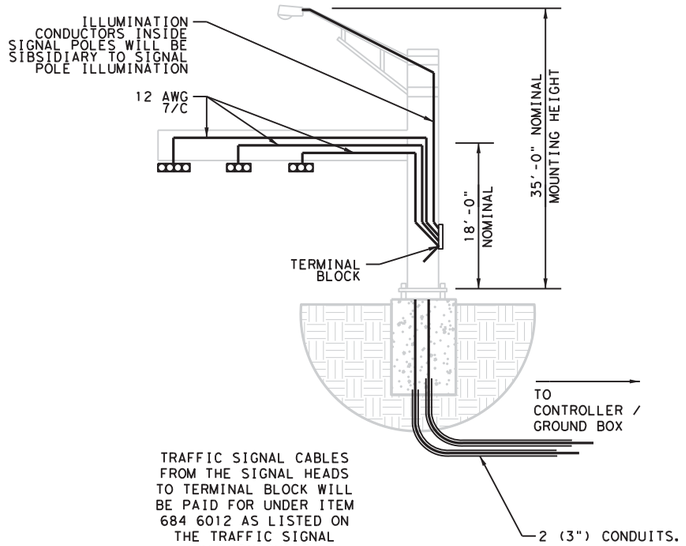

TRAFFIC SIGNAL CABLES FROM THE SIGNAL HEADS TO TERMINAL BLOCK WILL BE PAID FOR UNDER ITEM 684 6012 AS LISTED ON THE TRAFFIC SIGNAL SUMMARY SHEET.

EACH SIGNAL HEAD WILL BE WIRED TO TERMINAL BLOCK.

SIGNAL HEADS

PED SIGNAL HEADS P1*, P2*, P3*, P4*, P5**, P6**

SIGNAL HEADS #1, 6, 10, 15

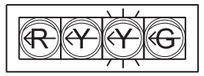

SIGNAL HEADS #2, 3, 7, 8, 11, 12, 16, 17

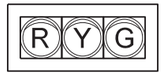

SIGNAL HEADS #4, 13

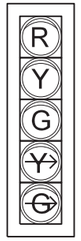

SIGNAL HEADS #5, 9, 14, 18

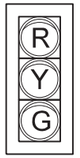

*RELOCATED, **EXISTING
ALL OTHER SIGNAL HEADS ARE PROPOSED

NOTES:

1. TY A SIGNS MOUNTED ON SIGNAL EQUIPMENT IS SHOWN FOR CONTRACTOR INFORMATION ONLY AND SUBSIDIARY TO ITEM 680 6002.

SIGNS

(S1) (S3) (S6) (S9)

R10-17T

36" X 42"
TY A
ALUM

(10.5 SQ FT)
EACH

(S2)

D3-1G

72" X 18"
TY A
ALUM

(9.0 SQ FT)
EACH

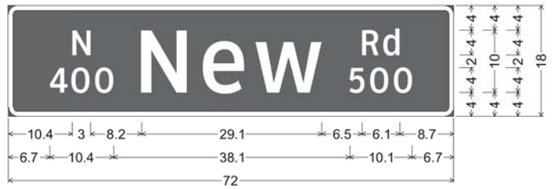

D3-1G;
1.5" Radius, 0.8" Border, White on, Green;
"N", ClearviewHwy-3-W; "400", ClearviewHwy-3-W;
"New", ClearviewHwy-3-W; "Rd", ClearviewHwy-3-W;
"500", ClearviewHwy-3-W;

(S8)

D3-1G

72" X 18"
TY A
ALUM

(9.0 SQ FT)
EACH

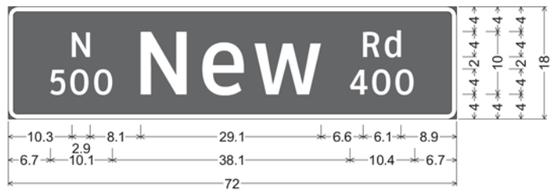

D3-1G;
1.5" Radius, 0.8" Border, White on, Green;
"N", ClearviewHwy-3-W; "500", ClearviewHwy-3-W;
"New", ClearviewHwy-3-W; "Rd", ClearviewHwy-3-W;
"400", ClearviewHwy-3-W;

STATE OF TEXAS
SCOTT R. ARNOLD
96782
LICENSED
PROFESSIONAL ENGINEER

Scott R. Arnold, P.E.
12/21/2020

Kimley»Horn F-928

© 2021

Texas Department of Transportation

TRAFFIC SIGNAL SIGNS AND HEADS

AT N. NEW ROAD

SHEET 3 OF 5

FED.RD. DIV.NO.	PROJECT ID.	HIGHWAY NO.
6	(SEE TITLE SHEET)	US 84

STATE	DIST.	COUNTY	SHEET NO.
TEXAS	WAC	MCLENNAN	
CONT.	SECT.	JOB	251
0055	15	072	

FILENAME: pw:\\kh-pw.bentley.com:kh-pw-01\Documents\01 Active Projects\TX-FTW-063586010 - US 84 (Waco Drive)\WAC 005515072\4 - Design\Plan Set\8. Traffic\US84_SIGSIGNOI_NEW.dgn
PLOTTED: 12/21/2020

PROJECT	US 84 (0055-15-072)								
SHEET	252								
			618 6029	620 6007	684 6007	684 6012	684 6049	6027 6003	ITS RADIO CABLE
			CONDT (PVC) (SCH 40) (3")	ELEC CONDR (NO.8) BARE	TRF SIG CBL (TY A)(12 AWG)(2 CONDR)	TRF SIG CBL (TY A)(12 AWG)(7 CONDR)	TRF SIG CBL (TY A)(16 AWG)(3 CONDR)	CONDUIT (PREPARE)	FOR CONTRACTOR INFO ONLY
TRF ID	TABLE	Location	LF	LF	LF	LF	LF	LF	LF
CONDUIT R01-1	CONDUIT	EXISTING			100	25	100	25	
CONDUIT R01-2	CONDUIT	EXISTING						25	
CONDUIT R02	CONDUIT	EXISTING			30	30	30	30	
CONDUIT R03	CONDUIT	EXISTING			150	150	150	150	
CONDUIT R04	CONDUIT	EXISTING			55	55	55	55	
CONDUIT R05	CONDUIT	EXISTING			15	15	15	15	
CONDUIT R06	CONDUIT	TRENCH	10	10	10		10		
CONDUIT R07	CONDUIT	TRENCH	20	20		20			
CONDUIT R08	CONDUIT	TRENCH	15	15	30				
CONDUIT R09	CONDUIT	EXISTING					20	10	
CONDUIT R10	CONDUIT	EXISTING			100		150	50	
CONDUIT R11	CONDUIT	EXISTING			290		290	145	
CONDUIT R12	CONDUIT	EXISTING			80		80	40	
CONDUIT R13	CONDUIT	TRENCH	15	15	15		15		
CONDUIT R14	CONDUIT	EXISTING			435		435	145	
CONDUIT R15	CONDUIT	EXISTING						15	15
PED POLE A	CONDUIT	IN PED POLE			5		10		
PED POLE B	CONDUIT	IN PED POLE				10			
PED POLE C	CONDUIT	EXISTING					20		
PED POLE D	CONDUIT	IN PED POLE			10				
PED POLE E	CONDUIT	IN PED POLE			5		10		
SIGNAL POLE A	CONDUIT	IN SIGNAL POLE				90			
SIGNAL POLE B	CONDUIT	IN SIGNAL POLE				55			
SIGNAL POLE C	CONDUIT	IN SIGNAL POLE				85			
SIGNAL POLE D	CONDUIT	IN SIGNAL POLE				70			30
Grand Total			60	60	1330	605	1390	705	45

FILENAME: pw:\\kh-pw.bentley.com:kh-pw-01\Documents\01 Active Projects\TX-FTW-063586010 - US 84 (Waco Drive)\WAC 005515072\4 - Design\Plan Set\8. Traffic\US84_CONSUM01_NEW.dgn
PLOTTED: 12/21/2020

Scott R Arnold, P.E.

12/21/2020

Kimley»Horn F-928

© 2021

Texas Department of Transportation

CONDUIT AND CONDUCTOR SUMMARY

AT N. NEW ROAD

SHEET 4 OF 5

FED.RD. DIV.NO.	PROJECT ID.	HIGHWAY NO.
6	(SEE TITLE SHEET)	US 84

STATE	DIST.	COUNTY	SHEET NO.
TEXAS	WAC	MCLENNAN	252
CONT.	SECT.	JOB	
0055	15	072	

PROJECT	US 84 (0055-15-072)												
SHEET	253												
		624 6010	680 6011	690 6006	690 6009	690 6024	690 6027	690 6030	690 6089	690 6097	6027 6008	6058 6001	6062 6038	TY A SIGN
		GROUND BOX TY D (162922)W/APRON	INSTALL HWY TRF SIG (UPGRADE)	REMOVAL OF GROUND BOXES	REMOVAL OF CABLES	REMOVAL OF SIGNAL HEAD ASSM	REMOVAL OF SIGNAL RELATED SIGNS	REMOVAL OF PEDESTRIAN PUSH BUTTONS	REMOVE PED POLE ASSM	REMOVE SPREAD SPECTRUM ANTENNA	GROUND BOX (PREPARE)	BBU SYSTEM (EXTERNAL BATT CABINET)	ITS RADIO (DUAL)(5 GHZ/5 GHZ)-C-U	FOR CONTRACTOR INFO ONLY
TRF ID	TABLE	EA	EA	EA	LF	EA	EA	EA	EA	EA	EA	EA	EA	SF
BBU	MISCELLANEOUS											1		
CABLES	MISCELLANEOUS				350									
GROUND BOX	MISCELLANEOUS	3		3							7			
ITS RADIO	MISCELLANEOUS									1			1	
P1	MISCELLANEOUS													
P2	MISCELLANEOUS													
P3	MISCELLANEOUS													
P4	MISCELLANEOUS													
PED	MISCELLANEOUS					4		4	4					
SIGN	MISCELLANEOUS						6							60
SIGNAL	MISCELLANEOUS		1											
SIGNAL HEAD	MISCELLANEOUS					18								
Grand Total		3	1	3	350	22	6	4	4	1	7	1	1	60

PROJECT	US 84 (0055-15-072)									
SHEET	253									
		682 6001	682 6002	682 6003	682 6004	682 6005	682 6006	682 6054	682 6055	682 6056
		VEH SIG SEC (12")LED(GRN)	VEH SIG SEC (12")LED(GRN ARW)	VEH SIG SEC (12")LED(YEL)	VEH SIG SEC (12")LED(YEL ARW)	VEH SIG SEC (12")LED(RED)	VEH SIG SEC (12")LED(RED ARW)	BACKPLATE W/REF BRDR(3 SEC)(VENT)ALUM	BACKPLATE W/REF BRDR(4 SEC)(VENT)ALUM	BACKPLATE W/REF BRDR(5 SEC)(VENT)ALUM
TRF ID	TABLE	EA	EA	EA	EA	EA	EA		EA	EA
SIGNAL HEAD 01	SIGNAL HEAD		1		2		1	1	1	
SIGNAL HEAD 02		1		1		1		1		
SIGNAL HEAD 03		1		1		1				
SIGNAL HEAD 04	SIGNAL HEAD	1	1	1	1	1				1
SIGNAL HEAD 05		1		1		1		1		
SIGNAL HEAD 06	SIGNAL HEAD		1		2		1		1	
SIGNAL HEAD 07		1		1		1		1		
SIGNAL HEAD 08		1		1		1		1		
SIGNAL HEAD 09		1		1		1		1		
SIGNAL HEAD 10	SIGNAL HEAD		1		2		1		1	
SIGNAL HEAD 11		1		1		1		1		
SIGNAL HEAD 12		1		1		1		1		
SIGNAL HEAD 13	SIGNAL HEAD	1	1	1	1	1				1
SIGNAL HEAD 14		1		1		1		1		
SIGNAL HEAD 15	SIGNAL HEAD		1		2		1		1	
SIGNAL HEAD 16		1		1		1		1		
SIGNAL HEAD 17		1		1		1		1		
SIGNAL HEAD 18		1		1		1		1		
Grand Total		14	6	14	10	14	4	12	4	2

PROJECT	US 84 (0055-15-072)		
SHEET	253		
		687 6001	687 6002
		PED POLE ASSEMBLY	PEDESTRIAN PUSH BUTTON POLE
TRF ID	TABLE	EA	EA
PED POLE A	POLE	1	
PED POLE B	POLE	1	
PED POLE D	POLE		1
PED POLE E	POLE	1	
Grand Total		3	1

ONLY PROPOSED POLES ARE SHOWN.

PROJECT	US 84 (0055-15-072)	
SHEET	253	
		PED POLE FND
		FOR CONTRACTOR INFO ONLY
TRF ID	TABLE	LF
PED POLE FND A	FOUNDATIONS	5.7
PED POLE FND B	FOUNDATIONS	5.7
PED POLE FND D	FOUNDATIONS	5.7
PED POLE FND E	FOUNDATIONS	5.7
Grand Total		22.8

ONLY FOUNDATIONS FOR PROPOSED POLES ARE SHOWN.

FILENAME: pw:\\kh-pw.bentley.com:kh-pw-01\Documents\01 Active Projects\TX-FTW-063586010 - US 84 (Waco Drive)\WAC 005515072\4 - Design\Plan Set\8. Traffic\US84_SIGSUM01_NEW.dgn
PLOTTED: 12/21/2020

STATE OF TEXAS
SCOTT R. ARNOLD
96782
LICENSED
PROFESSIONAL ENGINEER

Scott R. Arnold, P.E.
12/21/2020

Kimley»Horn
F-928

© 2021

Texas Department of Transportation

TRAFFIC SIGNAL SUMMARY

AT N. NEW ROAD

SHEET 5 OF 5

FED.RD. DIV.NO.	PROJECT ID.	HIGHWAY NO.
6	(SEE TITLE SHEET)	US 84

STATE	DIST.	COUNTY	SHEET NO.
TEXAS	WAC	MCLENNAN	253
CONT.	SECT.	JOB	
0055	15	072	

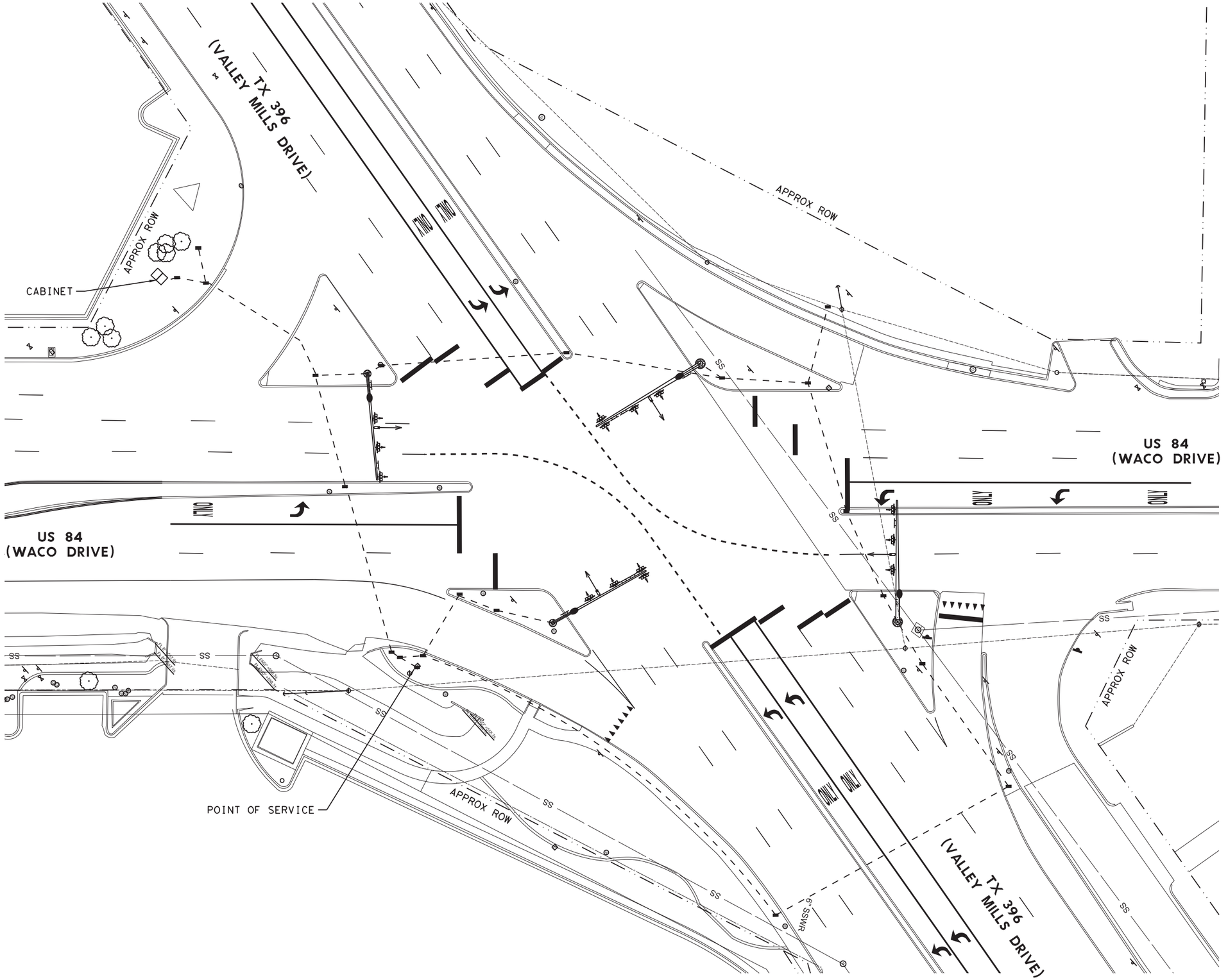

N

0' 20' 40'

LEGEND

- POINT OF SERVICE
- ELECTRICAL SERVICE
- CONDUIT, PVC
- GROUND BOX

NOTES

1. THE LOCATIONS SHOWN AS EXISTING CONDUIT RUNS ARE APPROXIMATE. THE EXACT LOCATION WILL BE DETERMINED IN THE FIELD. NO EXISTING CONDUIT WILL BE USED, SEE PROPOSED TRAFFIC SIGNAL SHEETS.

STATE OF TEXAS
SCOTT R. ARNOLD
96782
LICENSED
PROFESSIONAL ENGINEER

Scott R. Arnold, P.E.

12/21/2020

Kimley»Horn F-928

© 2021

Texas Department of Transportation

CONDITION DIAGRAM

AT VALLEY MILLS DRIVE

SHEET 1 OF 5

FED.RD. DIV.NO.	PROJECT ID.	HIGHWAY NO.
6	(SEE TITLE SHEET)	US 84

STATE	DIST.	COUNTY	SHEET NO.
TEXAS	WAC	MCLENNAN	254
CONT.	SECT.	JOB	
0055	15	072	

FILENAME: pw:\\kh-pw.bentley.com:kh-pw-01\Documents\01 Active Projects\TX-FTW-063586010 - US 84 (Waco Drive)\WAC 005515072\4 - Design\Plan Set\8. Traffic\US84_COND01_WM.dgn
PLOTTED: 12/21/2020

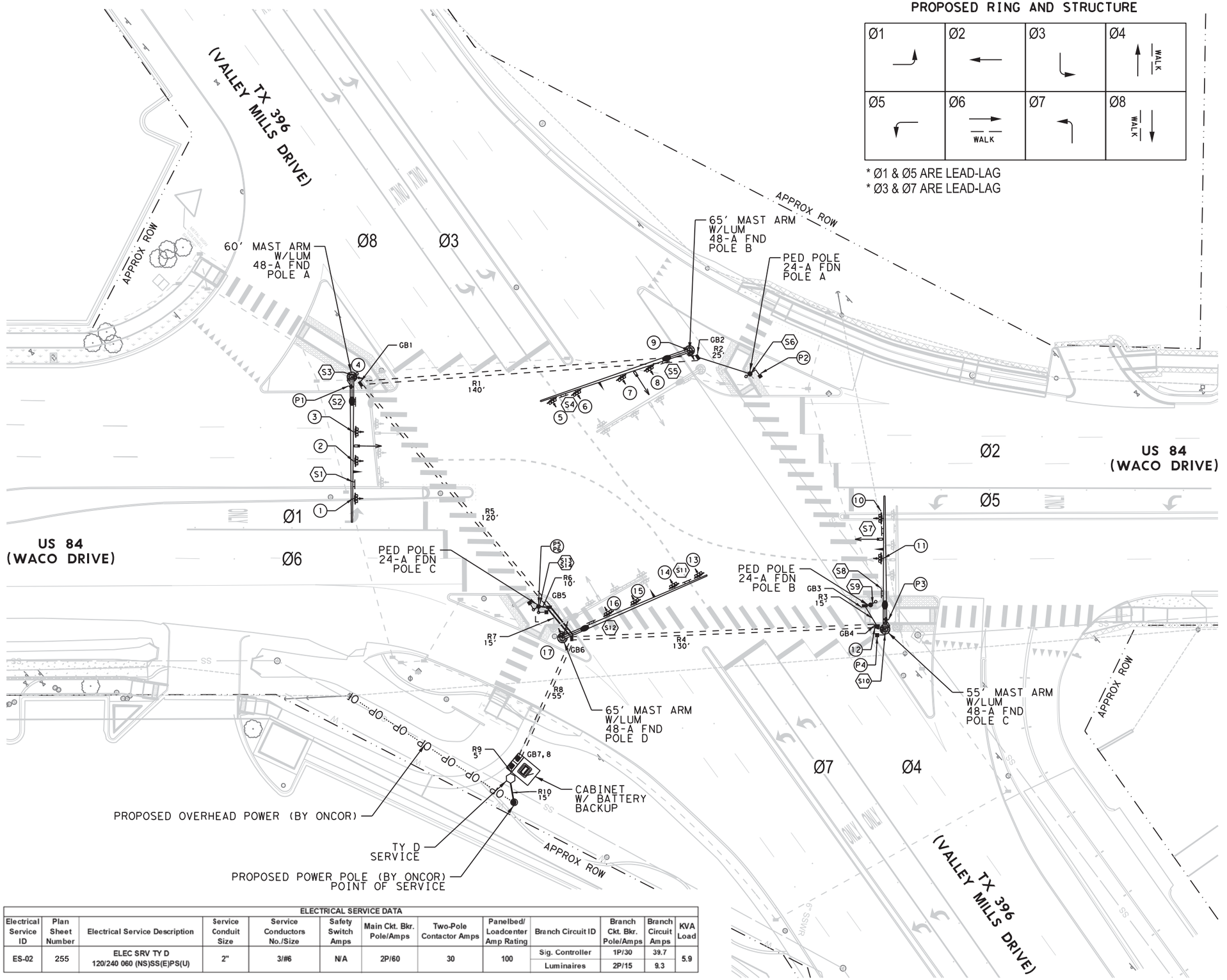

PROPOSED RING AND STRUCTURE

Ø1	Ø2	Ø3	Ø4 WALK
Ø5	Ø6 WALK	Ø7	Ø8 WALK

* Ø1 & Ø5 ARE LEAD-LAG
* Ø3 & Ø7 ARE LEAD-LAG

0' 20' 40'

LEGEND

- PROPOSED POINT OF SERVICE
- PROPOSED ELECTRICAL SERVICE
- PROPOSED CONDUIT, PVC
- PROPOSED CONDUIT, BORE
- PROPOSED VIVDS
- PROPOSED GROUND BOX (TY D)
- PROPOSED LED COUNTDOWN & APS
- PROPOSED LUMINAIRE
- PROPOSED SIGNAL POLE ASSEMBLY
- PROPOSED OPTICOM DETECTOR (INSTALL ONLY)
- PROPOSED ITS RADIO ANTENNA
- PROPOSED SIGNAL CABINET

NOTES:

1. SHORT RUNS FROM THE GROUND BOXES TO THE SIGNAL / PEDESTRIAN FOUNDATIONS WILL NOT BE PAID DIRECTLY, BUT SUBSIDIARY TO VARIOUS BID ITEMS. FOR THE SIGNAL POLES, THIS WILL BE 2 (3") CONDUITS.
2. INSTALL TRAFFIC SIGNAL CONTROLLER FOUNDATION PER TS-CF DETAIL.
3. ALL ROAD BORES TO BE (2) 3" SCH 80.

ELECTRICAL SERVICE DATA

Electrical Service ID	Plan Sheet Number	Electrical Service Description	Service Conduit Size	Service Conductors No./Size	Safety Switch Amps	Main Ckt. Bkr. Pole/Amps	Two-Pole Contactor Amps	Panelbed/ Loadcenter Amp Rating	Branch Circuit ID	Branch Ckt. Bkr. Pole/Amps	Branch Circuit Amps	KVA Load
ES-02	255	ELEC SRV TY D 120/240 060 (NS)SS(E)PS(U)	2"	3/#6	N/A	2P/60	30	100	Sig. Controller	1P/30	39.7	5.9
									Luminaires	2P/15	9.3	

Scott R. Arnold, P.E.
03/01/2021

Kimley»Horn F-928

© 2021

Texas Department of Transportation

PROPOSED TRAFFIC SIGNAL

AT VALLEY MILLS DRIVE

SHEET 2 OF 5

FED.RD. DIV.NO.	PROJECT ID.	HIGHWAY NO.
6	(SEE TITLE SHEET)	US 84

STATE	DIST.	COUNTY	SHEET NO.
TEXAS	WAC	MCLENNAN	255
CONT.	SECT.	JOB	
0055	15	072	

FILENAME: pw:\\kh-pw.bentley.com:kh-pw-01\Documents\01 Active Projects\TX-FTW-063586010 - US 84 (Waco Drive)\WAC 0055150724 - Design\Plan Set\8. Traffic\US84_SIG01_VM.dgn
PLOTTED: 12/21/2020

SIGNAL WIRING DETAIL

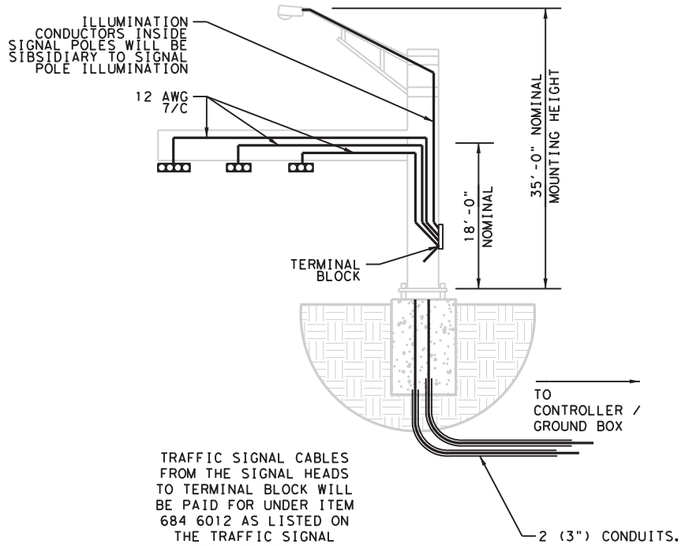

TRAFFIC SIGNAL CABLES FROM THE SIGNAL HEADS TO TERMINAL BLOCK WILL BE PAID FOR UNDER ITEM 684 6012 AS LISTED ON THE TRAFFIC SIGNAL SUMMARY SHEET.

EACH SIGNAL HEAD WILL BE WIRED TO TERMINAL BLOCK.

SIGNAL HEADS

PED SIGNAL HEADS P1, P2, P3, P4, P5, P6

SIGNAL HEADS #2, 3, 7, 8, 11, 15, 16

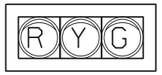

SIGNAL HEADS #4, 9, 12, 17

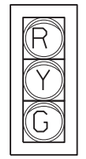

SIGNAL HEADS #1, 5, 6, 10, 13, 14

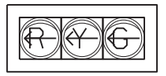

NOTES:

1. TY A SIGNS MOUNTED ON SIGNAL EQUIPMENT IS SHOWN FOR CONTRACTOR INFORMATION ONLY AND SUBSIDIARY TO ITEM 680 6002.

SIGNS

(S6) (S9) (S10) (S13)

R10-3E(R)

9" X 15" TY A ALUM (0.94 SQ FT) EACH

(S3) (S14)

R10-3E(L)

9" X 15" TY A ALUM (0.94 SQ FT) EACH

(S1) (S4) (S7) (S11)

R10-5

30" X 36" TY A ALUM (7.5 SQ FT) EACH

(S2)

D3-1G

126" X 18" TY A ALUM (15.75 SQ FT) EACH

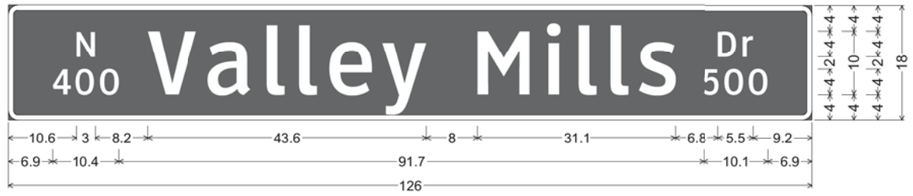

D3-1G;
1.5" Radius, 0.8" Border, White on, Green;
"N", ClearviewHwy-3-W; "400", ClearviewHwy-3-W; "Valley Mills", ClearviewHwy-3-W; "Dr", ClearviewHwy-3-W; "500", ClearviewHwy-3-W;

(S8)

D3-1G

126" X 18" TY A ALUM (15.75 SQ FT) EACH

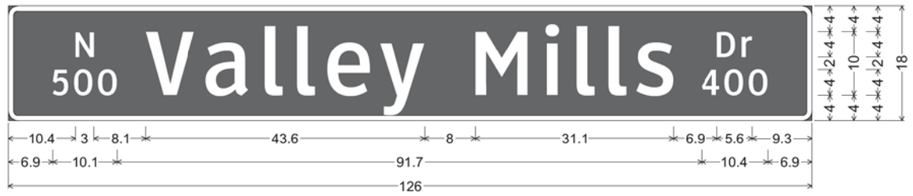

D3-1G;
1.5" Radius, 0.8" Border, White on, Green;
"N", ClearviewHwy-3-W; "500", ClearviewHwy-3-W; "Valley Mills", ClearviewHwy-3-W; "Dr", ClearviewHwy-3-W; "400", ClearviewHwy-3-W;

(S12)

D3-1G

84" X 18" TY A ALUM (10.5 SQ FT) EACH

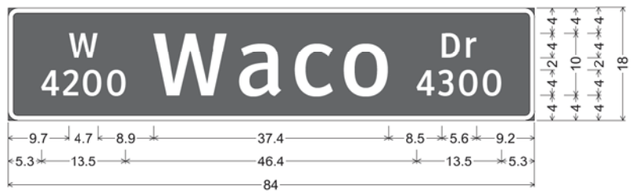

D3-1G;
1.5" Radius, 0.8" Border, White on, Green;
"W", ClearviewHwy-3-W; "4200", ClearviewHwy-3-W; "Waco", ClearviewHwy-3-W; "Dr", ClearviewHwy-3-W; "4300", ClearviewHwy-3-W;

(S5)

D3-1G

84" X 18" TY A ALUM (10.5 SQ FT) EACH

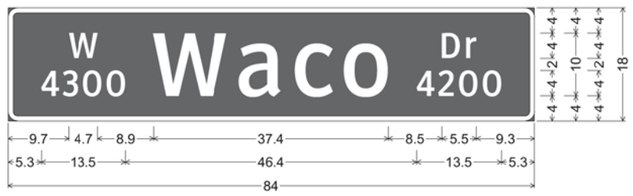

D3-1G;
1.5" Radius, 0.8" Border, White on, Green;
"W", ClearviewHwy-3-W; "4300", ClearviewHwy-3-W; "Waco", ClearviewHwy-3-W; "Dr", ClearviewHwy-3-W; "4200", ClearviewHwy-3-W;

STATE OF TEXAS
SCOTT R ARNOLD
96782
LICENSED PROFESSIONAL ENGINEER
NATIONAL

Scott R. Arnold, P.E.

03/01/2021

Kimley»Horn F-928

© 2021

Texas Department of Transportation

TRAFFIC SIGNAL SIGNS AND HEADS

AT VALLEY MILLS DRIVE

SHEET 3 OF 5

FED.RD. DIV.NO.	PROJECT ID.		HIGHWAY NO.
6	(SEE TITLE SHEET)		US 84
STATE	DIST.	COUNTY	SHEET NO.
TEXAS	WAC	MCLENNAN	
CONT.	SECT.	JOB	256
0055	15	072	

FILENAME: pw:\\kh-pw.bentley.com:kh-pw-01\Documents\01 Active Projects\TX-FTW-063586010 - US 84 (Waco Drive)\WAC 005515072\4 - Design\Plan Set\8. Traffic\US84_SIGSIGN01_VM.dgn
PLOTTED: 12/21/2020

PROJECT	US 84 (0055-15-072)
SHEET	257

			618 6046	618 6029	618 6054	620 6007	620 6008	620 6009	620 6010	684 6007	684 6012	684 6021	684 6049	6306 6007	OPTICOM CABLE	ITS RADIO CABLE
			CONDT (PVC) (SCH 80) (2")	CONDT (PVC) (SCH 40) (3")	CONDT (PVC) (SCH 80) (3") (BORE)	ELEC CONDR (NO.8) BARE	ELEC CONDR (NO.8) INSULATED	ELEC CONDR (NO.6) BARE	ELEC CONDR (NO.6) INSULATED	TRF SIG CBL (TY A)(12 AWG)(2 CONDR)	TRF SIG CBL (TY A)(12 AWG)(7 CONDR)	TRF SIG CBL (TY A)(12 AWG)(16 CONDR)	TRF SIG CBL (TY A)(16 AWG)(3 CONDR)	VIVDS CABLING	FOR CONTRACTOR INFO ONLY	FOR CONTRACTOR INFO ONLY
TRF ID	TABLE	Location	LF	LF	LF	LF	LF	LF	LF	LF	LF	LF	LF	LF	LF	LF
CONDUIT R01-1	CONDUIT	BORE			140	140	280			140		140	140	140	140	
CONDUIT R01-2	CONDUIT	BORE			140	140										
CONDUIT R02	CONDUIT	TRENCH			25	25				25			25			
CONDUIT R03	CONDUIT	TRENCH		15		15				15						
CONDUIT R04-1	CONDUIT	BORE			130	130	260			260		130		130	130	
CONDUIT R04-2	CONDUIT	BORE			130	130										
CONDUIT R05-1	CONDUIT	BORE			120	120	240			240		240	120	240	240	
CONDUIT R05-2	CONDUIT	BORE			120	120										
CONDUIT R06	CONDUIT	TRENCH		10		10				20			20			
CONDUIT R07-1	CONDUIT	TRENCH		15		15	30			60		30	45	30	30	
CONDUIT R07-2	CONDUIT	TRENCH		15		15										
CONDUIT R08-1	CONDUIT	BORE			55	55	220			330		220	165	220	220	55
CONDUIT R08-2	CONDUIT	BORE			55	55										
CONDUIT R09	CONDUIT	TRENCH		5			20	5	10							
CONDUIT R10*	CONDUIT	TRENCH	15													
PED POLE A	CONDUIT	IN PED POLE								5			10			
PED POLE B	CONDUIT	IN PED POLE								5						
PED POLE C	CONDUIT	IN PED POLE								10			20			
SIGNAL POLE A	CONDUIT	IN SIGNAL POLE								5	180		10	45	60	
SIGNAL POLE B	CONDUIT	IN SIGNAL POLE									250			60	60	
SIGNAL POLE C	CONDUIT	IN SIGNAL POLE								5	130		20	45	60	
SIGNAL POLE D	CONDUIT	IN SIGNAL POLE									265			60	60	30
Grand Total			15	60	915	970	1050	5	10	1120	825	760	575	970	1000	85

*CONDUIT RUN 10 SHALL INCLUDE A SWEEPING 90° PVC AND SHALL STUB UP AT BOTTOM OF ONCOR POLE.

FILENAME: pw:\\kh-pw.bentley.com:kh-pw-01\Documents\01 Active Projects\TX-FTW-063586010 - US 84 (Waco Drive)\WAC 0055150724 - Design\Plan Set\8. Traffic\US84_CONSUM01_WM.dgn
PLOTTED: 12/21/2020

Scott R. Arnold, P.E.

12/21/2020

Kimley»Horn F-928

© 2021

Texas Department of Transportation

CONDUIT AND CONDUCTOR SUMMARY

AT VALLEY MILLS DRIVE

SHEET 4 OF 5

FED.RD. DIV.NO.	PROJECT ID.	HIGHWAY NO.
6	(SEE TITLE SHEET)	US 84

STATE	DIST.	COUNTY	SHEET NO.
TEXAS	WAC	MCLENNAN	257
CONT.	SECT.	JOB	
0055	15	072	

PROJECT	US 84 (0055-15-072)													
SHEET	258													
		624 6010	628 6144	680 6002	680 6004	682 6018	688 6001	688 6003	6058 6001	6062 6038	6306 6001	6306 6002	CABINET	OPTICOM	TY A SIGN
		GROUND BOX TY D (162922)W/APRON	ELC SRV TY D 120/240 060(NS)SS(E)PS(U)	INSTALL HWY TRF SIG (ISOLATED)	REMOVING TRAFFIC SIGNALS	PED SIG SEC (LED)(COUNTDOWN)	PED DETECT PUSH BUTTON (APS)	PED DETECTOR CONTROLLER UNIT	BBU SYSTEM (EXTERNAL BATT CABINET)	ITS RADIO (DUAL)(5 GHZ/5 GHZ)-C-U	VIVDS PROSR SYS	VIVDS CAM ASSY FXD LNS	TxDOT CABINET AND CONTROLLER	FOR CONTRACTOR INFO ONLY	FOR CONTRACTOR INFO ONLY
TRF ID	TABLE	EA	EA	EA	EA	EA	EA	EA	EA	EA	EA	EA	EA	EA	SF
BBU	MISCELLANEOUS								1						
CABINET	MISCELLANEOUS												1		
GROUND BOX	MISCELLANEOUS	8													
ITS RADIO	MISCELLANEOUS									1					
OPTICOM	MISCELLANEOUS													4	
P1	MISCELLANEOUS					1									
P2	MISCELLANEOUS					1									
P3	MISCELLANEOUS					1									
P4	MISCELLANEOUS					1									
P5	MISCELLANEOUS					1									
P6	MISCELLANEOUS					1									
PED	MISCELLANEOUS						6	1							
SERVICE	MISCELLANEOUS		1												
SIGN	MISCELLANEOUS														84
SIGNAL	MISCELLANEOUS			1	1										
VIVDS	MISCELLANEOUS										1	4			
Grand Total		8	1	1	1	6	6	1	1	1	1	4	1	4	84

PROJECT	US 84 (0055-15-072)							
SHEET	258							
		682 6001	682 6002	682 6003	682 6004	682 6005	682 6006	682 6054
		VEH SIG SEC (12")LED(GRN)	VEH SIG SEC (12")LED(GRN ARW)	VEH SIG SEC (12")LED(YEL)	VEH SIG SEC (12")LED(YEL ARW)	VEH SIG SEC (12")LED(RED)	VEH SIG SEC (12")LED(RED ARW)	BACKPLATE W/REF BRDR(3 SEC)(VENT)ALUM
TRF ID	TABLE	EA	EA	EA	EA	EA	EA	EA
SIGNAL HEAD 01	SIGNAL HEAD		1		1		1	1
SIGNAL HEAD 02	SIGNAL HEAD	1		1		1		1
SIGNAL HEAD 03	SIGNAL HEAD	1		1		1		1
SIGNAL HEAD 04	SIGNAL HEAD	1		1		1		1
SIGNAL HEAD 05	SIGNAL HEAD		1		1		1	1
SIGNAL HEAD 06	SIGNAL HEAD		1		1		1	1
SIGNAL HEAD 07	SIGNAL HEAD	1		1		1		1
SIGNAL HEAD 08	SIGNAL HEAD	1		1		1		1
SIGNAL HEAD 09	SIGNAL HEAD	1		1		1		1
SIGNAL HEAD 10	SIGNAL HEAD		1		1		1	1
SIGNAL HEAD 11	SIGNAL HEAD	1		1		1		1
SIGNAL HEAD 12	SIGNAL HEAD	1		1		1		1
SIGNAL HEAD 13	SIGNAL HEAD		1		1		1	1
SIGNAL HEAD 14	SIGNAL HEAD		1		1		1	1
SIGNAL HEAD 15	SIGNAL HEAD	1		1		1		1
SIGNAL HEAD 16	SIGNAL HEAD	1		1		1		1
SIGNAL HEAD 17	SIGNAL HEAD	1		1		1		1
Grand Total		11	6	11	6	11	6	17

PROJECT	US 84 (0055-15-072)					
SHEET	258					
		686 6059	686 6063	686 6067	687 6001	687 6002
		INS TRF SIG PL AM(S)1 ARM(55')LUM	INS TRF SIG PL AM(S)1 ARM(60')LUM	INS TRF SIG PL AM(S)1 ARM(65')LUM	PED POLE ASSEMBLY	PEDESTRIAN PUSH BUTTON POLE
TRF ID	TABLE	EA	EA	EA	EA	EA
PED POLE A	POLE				1	
PED POLE B	POLE					1
PED POLE C	POLE				1	
TRAFFIC SIGNAL POLE A	POLE		1			
TRAFFIC SIGNAL POLE B	POLE			1		
TRAFFIC SIGNAL POLE C	POLE	1				
TRAFFIC SIGNAL POLE D	POLE			1		
Grand Total		1	1	2	2	1

PROJECT	US 84 (0055-15-072)		
SHEET	258		
		PED POLE FND	416 6034
		FOR CONTRACTOR INFO ONLY	DRILL SHAFT (TRF SIG POLE) (48 IN)
TRF ID	TABLE	LF	LF
PED POLE FND A	FOUNDATIONS	5.7	
PED POLE FND B	FOUNDATIONS	5.7	
PED POLE FND C	FOUNDATIONS	5.7	
SIGNAL POLE FND A	FOUNDATIONS		21.9
SIGNAL POLE FND B	FOUNDATIONS		21.9
SIGNAL POLE FND C	FOUNDATIONS		21.9
SIGNAL POLE FND D	FOUNDATIONS		21.9
Grand Total		17.1	87.6

STATE OF TEXAS
SCOTT R. ARNOLD
96782
LICENSED
PROFESSIONAL ENGINEER

Scott R. Arnold, P.E.

03/01/2021

Kimley»Horn F-928

© 2021

Texas Department of Transportation

TRAFFIC SIGNAL SUMMARY

AT VALLEY MILLS DRIVE

SHEET 5 OF 5

FED. RD. DIV. NO.	PROJECT ID.	HIGHWAY NO.
6	(SEE TITLE SHEET)	US 84

STATE	DIST.	COUNTY	SHEET NO.
TEXAS	WAC	MCLENNAN	258
CONT.	SECT.	JOB	
0055	15	072	

FILENAME: pw:\\kh-pw.bentley.com:kh-pw-01\Documents\01 Active Projects\TX-FTW-063586010 - US 84 (Waco Drive)\WAC 005515072\4 - Design\Plan Set\8. Traffic\US84_SIGSUM01_WM.dgn
PLOTTED: 12/21/2020

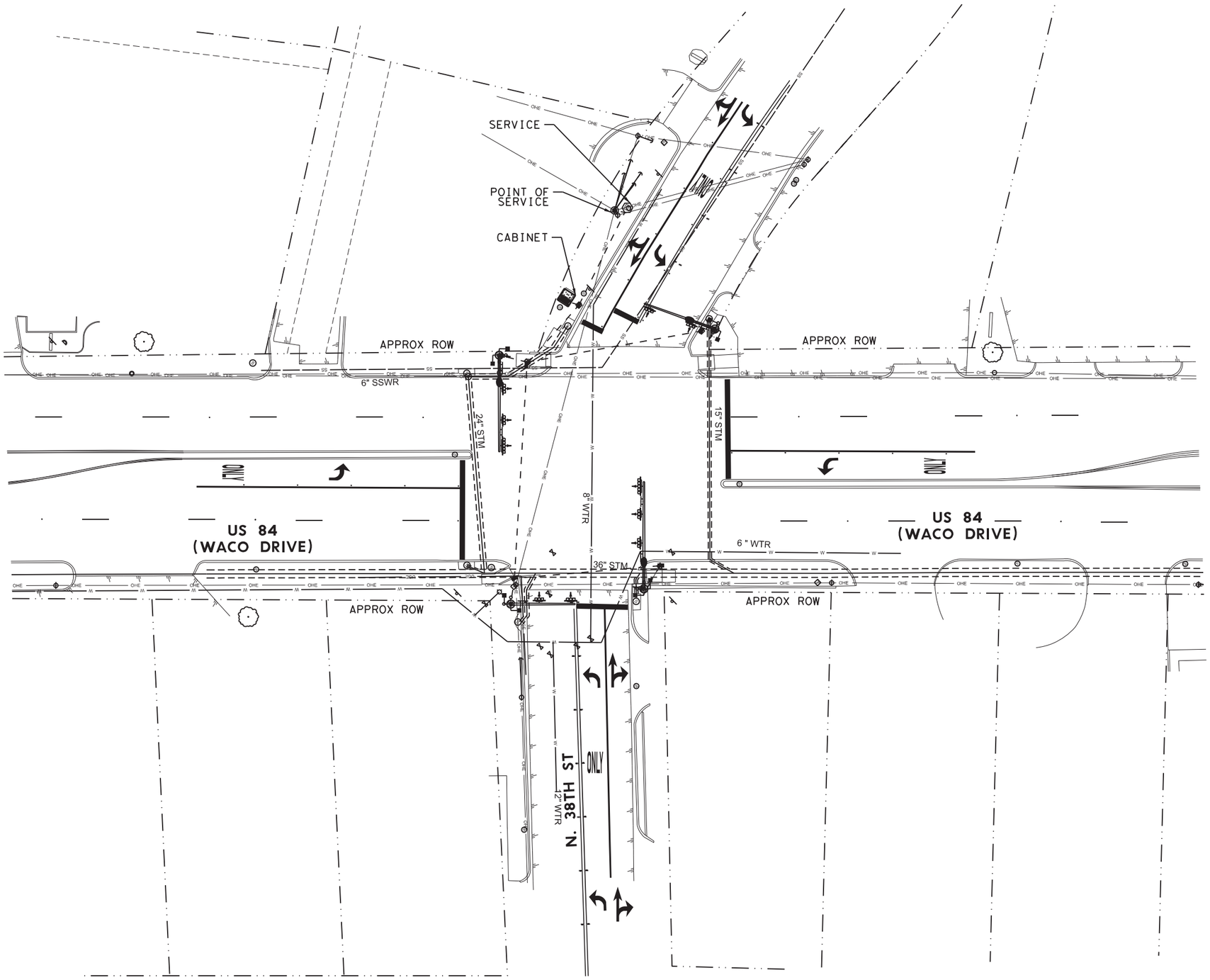

LEGEND

- POINT OF SERVICE
- ELECTRICAL SERVICE
- CONDUIT, PVC
- GROUND BOX

NOTES

1. THE LOCATIONS SHOWN AS EXISTING CONDUIT RUNS ARE APPROXIMATE. THE EXACT LOCATION WILL BE DETERMINED IN THE FIELD. NO EXISTING CONDUIT WILL BE USED, SEE PROPOSED TRAFFIC SIGNAL SHEETS.

STATE OF TEXAS
SCOTT R. ARNOLD
96782
LICENSED
PROFESSIONAL ENGINEER

Scott R. Arnold, P.E.
12/21/2020

Kimley»Horn F-928

© 2021

Texas Department of Transportation

CONDITION DIAGRAM

AT N. 38TH STREET

SHEET 1 OF 5

FED.RD. DIV.NO.	PROJECT ID.	HIGHWAY NO.
6	(SEE TITLE SHEET)	US 84

STATE	DIST.	COUNTY	SHEET NO.
TEXAS	WAC	MCLENNAN	259
CONT.	SECT.	JOB	
0055	15	072	

FILENAME: pw:\\kh-pw.bentley.com:kh-pw-01\Documents\01 Active Projects\TX-FTW-063586010 - US 84 (Waco Drive)\WAC 005515072\4 - Design\Plan Set\8. Traffic\US84_EXCON_N38TH.dgn
PLOTTED: 12/21/2020

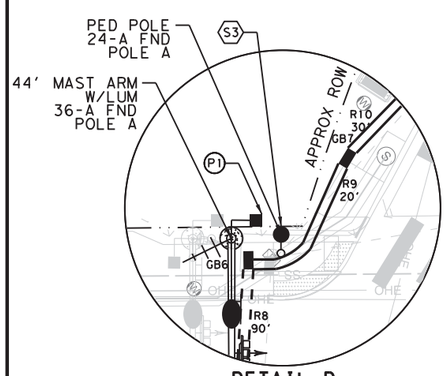

DETAIL D
NW CORNER
US 84 AT N. 38TH ST
NTS

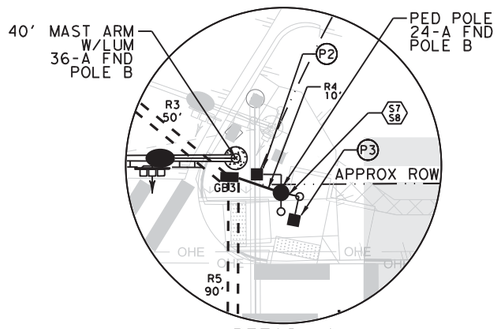

DETAIL A
NE CORNER
US 84 AT N. 38TH ST
NTS

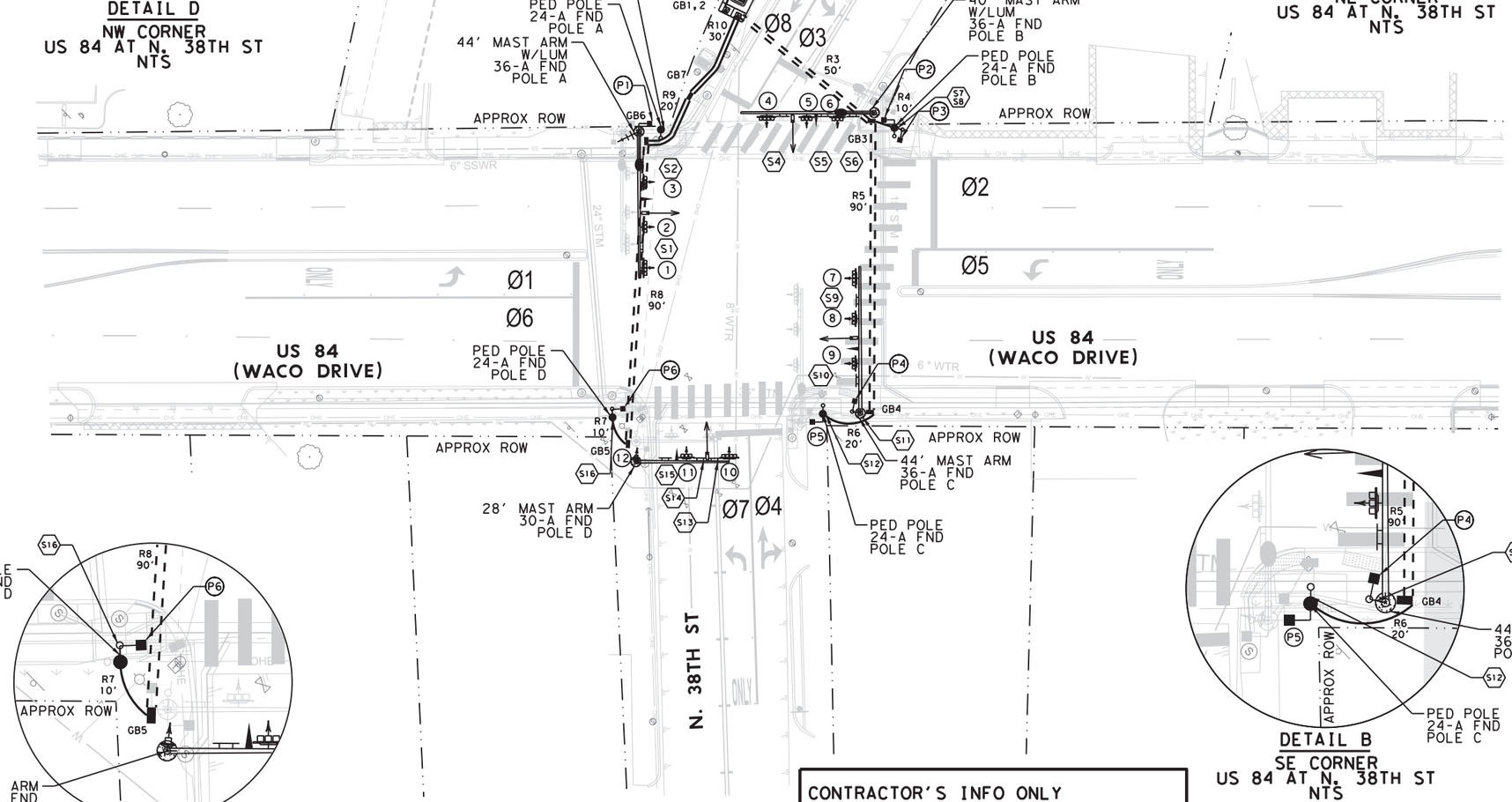

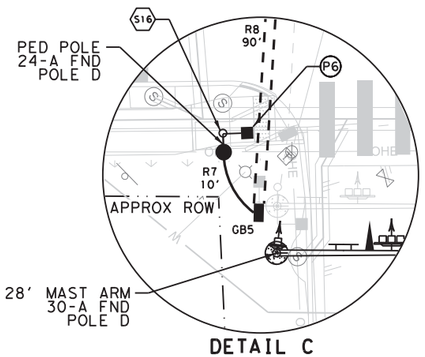

DETAIL C
SW CORNER
US 84 AT N. 38TH ST
NTS

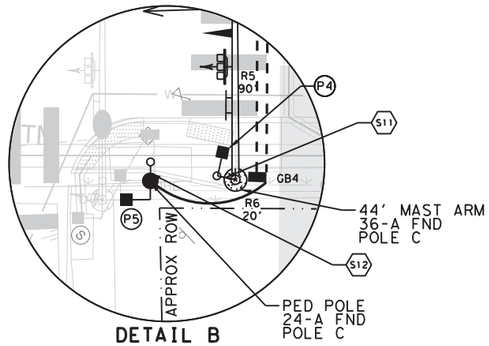

DETAIL B
SE CORNER
US 84 AT N. 38TH ST
NTS

CONTRACTOR'S INFO ONLY

BORE PIT REMOVAL/REPLACEMENT QUANTITIES WITHIN TEMPORARY RIGHT OF ENTRY:
- *25 SF BLOCK SODDING, 5 LF OF CURB, AND 20 SF OF CONCRETE PARKING LOT ON SE CORNER
- *25 SF BLOCK SODDING ON NW CORNER

PROPOSED RING AND STRUCTURE

Ø1	Ø2 WALK	Ø3	Ø4 WALK
Ø5	Ø6 WALK	Ø7	Ø8

ELECTRICAL SERVICE DATA

Electrical Service ID	Plan Sheet Number	Electrical Service Description	Service Conduit Size	Service Conductors No./Size	Safety Switch Amps	Main Ckt. Bkr. Pole/Amps	Two-Pole Contactor Amps	Panelbed/ Loadcenter Amp Rating	Branch Circuit ID	Branch Ckt. Bkr. Pole/Amps	Branch Circuit Amps	KVA Load
ES-07	260	ELEC SRV TY D 120/240 060 (NS)SS(E)PS(U)	2"	3/#6	N/A	2P/60	30	100	Sig. Controller	1P/30	34.1	4.4
									Luminaires	2P/15	2.3	

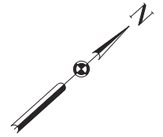

0' 20' 40'

LEGEND

- EXISTING POINT OF SERVICE
- PROPOSED ELECTRICAL SERVICE
- PROPOSED CONDUIT, PVC
- PROPOSED CONDUIT, BORE
- PROPOSED VIVDS
- PROPOSED GROUND BOX (TY D)
- PROPOSED LED COUNTDOWN & APS
- PROPOSED LUMINAIRE
- PROPOSED SIGNAL POLE ASSEMBLY
- PROPOSED OPTICOM DETECTOR (INSTALL ONLY)
- PROPOSED ITS RADIO ANTENNA
- PROPOSED SIGNAL CABINET

NOTES:

1. SHORT RUNS FROM THE GROUND BOXES TO THE SIGNAL / PEDESTRIAN FOUNDATIONS WILL NOT BE PAID DIRECTLY, BUT SUBSIDIARY TO VARIOUS BID ITEMS. FOR THE SIGNAL POLES, THIS WILL BE 2 (3") CONDUITS.
2. INSTALL TRAFFIC SIGNAL CONTROLLER FOUNDATION PER TS-CF DETAIL.
3. ALL ROAD BORES TO BE (2) 3" SCH 80.

Scott R. Arnold, P.E.
03/01/2021

Kimley»Horn F-928

© 2021

Texas Department of Transportation

PROPOSED TRAFFIC SIGNAL

AT N. 38TH STREET

SHEET 2 OF 5

FED. RD. DIV. NO.	PROJECT ID.	HIGHWAY NO.
6	(SEE TITLE SHEET)	US 84

STATE	DIST.	COUNTY	SHEET NO.
TEXAS	WAC	MCLENNAN	260
CONT.	SECT.	JOB	
0055	15	072	

FILENAME: pw:\\kh-pw.bentley.com:kh-pw-01\Documents\01 Active Projects\TX-FTW-063586010 - US 84 (Waco Drive)\WAC 0055150721\4 - Design\Plan Set\8. Traffic\US84_SIG01_N38TH.dgn
PLOTTED: 12/21/2020

SIGNAL WIRING DETAIL

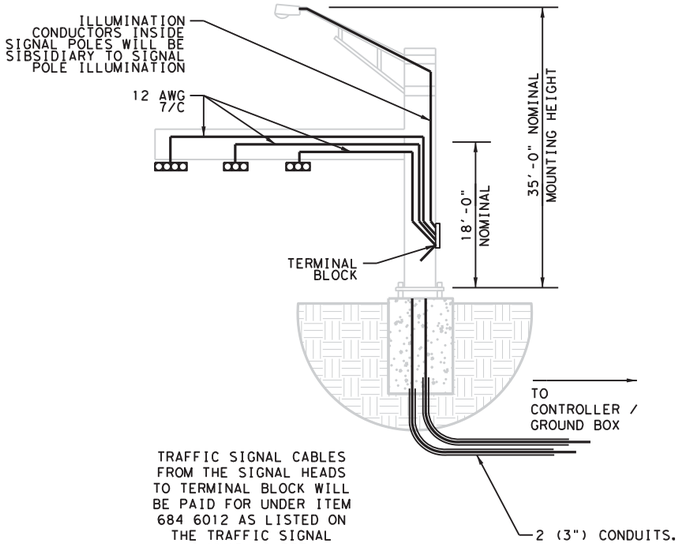

TRAFFIC SIGNAL CABLES FROM THE SIGNAL HEADS TO TERMINAL BLOCK WILL BE PAID FOR UNDER ITEM 684 6012 AS LISTED ON THE TRAFFIC SIGNAL SUMMARY SHEET.

EACH SIGNAL HEAD WILL BE WIRED TO TERMINAL BLOCK.

SIGNAL HEADS

PED SIGNAL HEADS P1, P2, P3, P4, P5, P6

SIGNAL HEADS #1, 4, 7, 10

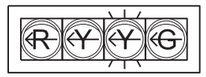

SIGNAL HEADS #2, 3, 5, 6, 8, 9, 11

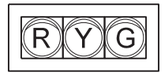

SIGNAL HEAD #12

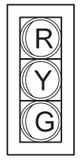

NOTES:

1. TY A SIGNS MOUNTED ON SIGNAL EQUIPMENT IS SHOWN FOR CONTRACTOR INFORMATION ONLY AND SUBSIDIARY TO ITEM 680 6002.

SIGNS

S3 S12

R10-3E(R)

9" X 15" TY A ALUM (0.94 SQ FT) EACH

S7 S8 S11 S16

R10-3E(L)

9" X 15" TY A ALUM (0.94 SQ FT) EACH

S1 S4 S7 S13

R10-17T

36" X 42" TY A ALUM (10.5 SQ FT) EACH

S5 S14

R3-8 LK

36" X 30" TY A ALUM (7.5 SQ FT) EACH

S2

D3-1G

60" X 18" TY A ALUM (7.5 SQ FT) EACH

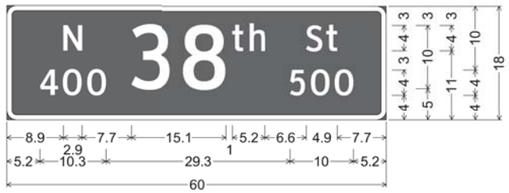

D3-1G;
1.5" Radius, 0.8" Border, White on, Green;
"N", ClearviewHwy-3-W; "400", ClearviewHwy-3-W;
"38", ClearviewHwy-3-W; "th", ClearviewHwy-3-W;
"St", ClearviewHwy-3-W; "500", ClearviewHwy-3-W;

S10

D3-1G

60" X 18" TY A ALUM (7.5 SQ FT) EACH

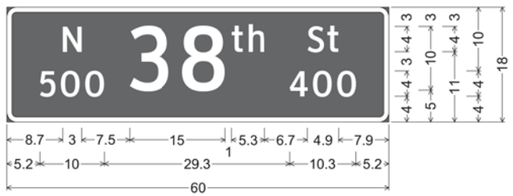

D3-1G;
1.5" Radius, 0.8" Border, White on, Green;
"N", ClearviewHwy-3-W; "500", ClearviewHwy-3-W;
"38", ClearviewHwy-3-W; "th", ClearviewHwy-3-W;
"St", ClearviewHwy-3-W; "400", ClearviewHwy-3-W;

S6

D3-1G

84" X 18" TY A ALUM (10.5 SQ FT) EACH

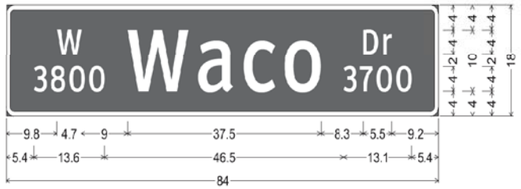

D3-1G;
1.5" Radius, 0.8" Border, White on, Green;
"W", ClearviewHwy-3-W; "3800", ClearviewHwy-3-W; "Waco", ClearviewHwy-3-W;
"Dr", ClearviewHwy-3-W; "3700", ClearviewHwy-3-W;

S15

D3-1G

84" X 18" TY A ALUM (10.5 SQ FT) EACH

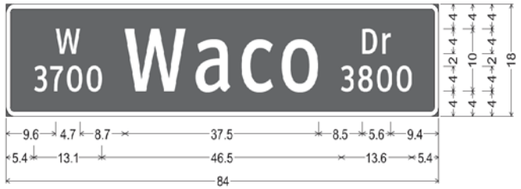

D3-1G;
1.5" Radius, 0.8" Border, White on, Green;
"W", ClearviewHwy-3-W; "3700", ClearviewHwy-3-W; "Waco", ClearviewHwy-3-W;
"Dr", ClearviewHwy-3-W; "3800", ClearviewHwy-3-W;

Scott R. Arnold, P.E.

12/21/2020

Kimley»Horn F-928

© 2021

Texas Department of Transportation

TRAFFIC SIGNAL SIGNS AND HEADS

AT N. 38TH STREET

SHEET 3 OF 5

FED. RD. DIV. NO.	PROJECT ID.	HIGHWAY NO.
6	(SEE TITLE SHEET)	US 84

STATE	DIST.	COUNTY	SHEET NO.
TEXAS	WAC	MCLENNAN	261
CONT.	SECT.	JOB	
0055	15	072	

FILENAME: pw:\\kh-pw.bentley.com:kh-pw-01\Documents\01 Active Projects\TX-FTW-063586010 - US 84 (Waco Drive)\WAC 0055150724 - Design\Plan Set\8. Traffic\US84_SIGSIGN01_N38TH.dgn
PLOTTED: 12/21/2020

PROJECT	US 84 (0055-15-072)
SHEET	262

			618 6046	618 6029	618 6054	620 6007	620 6008	620 6009	620 6010	684 6007	684 6012	684 6021	684 6049	6306 6007	OPTICOM CABLE	ITS RADIO CABLE
			CONDT (PVC) (SCH 80) (2")	CONDT (PVC) (SCH 40) (3")	CONDT (PVC) (SCH 80) (3") (BORE)	ELEC CONDR (NO.8) BARE	ELEC CONDR (NO.8) INSULATED	ELEC CONDR (NO.6) BARE	ELEC CONDR (NO.6) INSULATED	TRF SIG CBL (TY A)(12 AWG)(2 CONDR)	TRF SIG CBL (TY A)(12 AWG)(7 CONDR)	TRF SIG CBL (TY A)(12 AWG)(16 CONDR)	TRF SIG CBL (TY A)(16 AWG)(3 CONDR)	VIVDS CABLING	FOR CONTRACTOR INFO ONLY	FOR CONTRACTOR INFO ONLY
TRF ID	TABLE	Location	LF	LF	LF	LF	LF	LF	LF	LF	LF	LF	LF	LF	LF	LF
CONDUIT R01*	CONDUIT	TRENCH	10													
CONDUIT R02	CONDUIT	TRENCH		15			60	15	30							
CONDUIT R03-1	CONDUIT	BORE			50	50	100									
CONDUIT R03-2	CONDUIT	BORE			50	50				200		100	150	100	100	
CONDUIT R04	CONDUIT	TRENCH		10		10				20			20			
CONDUIT R05-1	CONDUIT	BORE			90	90										
CONDUIT R05-2	CONDUIT	BORE			90	90				180		90	90	90	90	
CONDUIT R06	CONDUIT	TRENCH		20		20				20			20			
CONDUIT R07	CONDUIT	TRENCH		10		10				10			10			
CONDUIT R08-1	CONDUIT	BORE			90	90				90		90	90	90	90	
CONDUIT R08-2	CONDUIT	BORE			90	90										
CONDUIT R09-1	CONDUIT	TRENCH		20		20	40			40		40	20	40	40	20
CONDUIT R09-2	CONDUIT	TRENCH		20		20										
CONDUIT R10-1	CONDUIT	TRENCH		30		30	60			60		60	30	60	60	30
CONDUIT R10-2	CONDUIT	TRENCH		30		30										
PED POLE A	CONDUIT	IN PED POLE								5						
PED POLE B	CONDUIT	IN PED POLE								10			20			
PED POLE C	CONDUIT	IN PED POLE								5			10			
PED POLE D	CONDUIT	IN PED POLE								5			10			
SIGNAL POLE A	CONDUIT	IN SIGNAL POLE									155		10	50	45	30
SIGNAL POLE B	CONDUIT	IN SIGNAL POLE									130			50	45	
SIGNAL POLE C	CONDUIT	IN SIGNAL POLE								5	155		10	50	45	
SIGNAL POLE D	CONDUIT	IN SIGNAL POLE									105			45	35	
Grand Total			10	155	460	600	260	15	30	650	545	380	490	575	550	80

*CONDUIT RUN 1 SHALL INCLUDE A SWEEPING 90° PVC AND SHALL STUB UP AT BOTTOM OF ONCOR POLE.

STATE OF TEXAS
SCOTT R. ARNOLD
96782
LICENSED
PROFESSIONAL ENGINEER

Scott R. Arnold, P.E.

12/21/2020

Kimley»Horn F-928

© 2021

Texas Department of Transportation

CONDUIT AND CONDUCTOR SUMMARY

AT N. 38TH STREET

SHEET 4 OF 5

FED.RD. DIV.NO.	PROJECT ID.	HIGHWAY NO.
6	(SEE TITLE SHEET)	US 84

STATE	DIST.	COUNTY	SHEET NO.
TEXAS	WAC	MCLENNAN	262
CONT.	SECT.	JOB	
0055	15	072	

FILENAME: pw:\\kh-pw.bentley.com:kh-pw-01\Documents\01 Active Projects\TX-FTW-063586010 - US 84 (Waco Drive)\WAC 005515072\4 - Design\Plan Sets\8. Traffic\US84_CONSUM01_N38TH.dgn
PLOTTED: 12/21/2020

PROJECT	US 84 (0055-15-072)												
SHEET	263												
		624 6010	628 6144	680 6002	680 6004	682 6018	688 6001	688 6003	6062 6038	6306 6001	6306 6002	CABINET	OPTICOM	TY A SIGN
		GROUND BOX TY D (162922)W/APRON	ELC SRV TY D 120/240 060(NS)SS(E)PS(U)	INSTALL HWY TRF SIG (ISOLATED)	REMOVING TRAFFIC SIGNALS	PED SIG SEC (LED)(COUNTDOWN)	PED DETECT PUSH BUTTON (APS)	PED DETECTOR CONTROLLER UNIT	ITS RADIO (DUAL)(5 GHZ/5 GHZ)-C-U	VIVDS PROSR SYS	VIVDS CAM ASSY FXD LNS	TxDOT CABINET AND CONTROLLER	FOR CONTRACTOR INFO ONLY	FOR CONTRACTOR INFO ONLY
TRF ID	TABLE	EA	EA	EA	EA	EA	EA	EA	EA	EA	EA	EA	EA	SF
CABINET	MISCELLANEOUS											1		
GROUND BOX	MISCELLANEOUS	6												
ITS RADIO	MISCELLANEOUS								1					
OPTICOM	MISCELLANEOUS												4	
P1	MISCELLANEOUS					1								
P2	MISCELLANEOUS					1								
P3	MISCELLANEOUS					1								
P4	MISCELLANEOUS					1								
P5	MISCELLANEOUS					1								
P6	MISCELLANEOUS					1								
PED	MISCELLANEOUS						6	1						
SERVICE	MISCELLANEOUS		1											
SIGN	MISCELLANEOUS													99
SIGNAL	MISCELLANEOUS			1	1									
VIVDS	MISCELLANEOUS									1	4			
Grand Total		6	1	1	1	6	6	1	1	1	4	1	4	99

PROJECT	US 84 (0055-15-072)								
SHEET	263								
		682 6001	682 6002	682 6003	682 6004	682 6005	682 6006	682 6054	682 6055
		VEH SIG SEC (12")LED(GRN)	VEH SIG SEC (12")LED(GRN ARW)	VEH SIG SEC (12")LED(YEL)	VEH SIG SEC (12")LED(YEL ARW)	VEH SIG SEC (12")LED(RED)	VEH SIG SEC (12")LED(RED ARW)	BACKPLATE W/REF BRDR(3 SEC)(VENT)ALUM	BACKPLATE W/REF BRDR(4 SEC)(VENT)ALUM
TRF ID	TABLE	EA	EA	EA	EA	EA	EA	EA	EA
SIGNAL HEAD 01	SIGNAL HEAD		1		2		1		1
SIGNAL HEAD 02	SIGNAL HEAD	1		1		1		1	
SIGNAL HEAD 03	SIGNAL HEAD	1		1		1		1	
SIGNAL HEAD 04	SIGNAL HEAD		1		2		1		1
SIGNAL HEAD 05	SIGNAL HEAD	1		1		1		1	
SIGNAL HEAD 06	SIGNAL HEAD	1		1		1		1	
SIGNAL HEAD 07	SIGNAL HEAD		1		2		1		1
SIGNAL HEAD 08	SIGNAL HEAD	1		1		1		1	
SIGNAL HEAD 09	SIGNAL HEAD	1		1		1		1	
SIGNAL HEAD 10	SIGNAL HEAD		1		2		1		1
SIGNAL HEAD 11	SIGNAL HEAD	1		1		1		1	
SIGNAL HEAD 12	SIGNAL HEAD	1		1		1		1	
Grand Total		8	4	8	8	8	4	8	4

PROJECT	US 84 (0055-15-072)						
SHEET	263						
		686 6029	686 6043	686 6045	686 6047	687 6001	687 6002
		INS TRF SIG PL AM (S)1 ARM(28')	INS TRF SIG PL AM(S)1 ARM(40')LUM	INS TRF SIG PL AM(S)1 ARM(44')	INS TRF SIG PL AM(S)1 ARM(44')LUM	PED POLE ASSEMBLY	PEDESTRIAN PUSH BUTTON POLE
TRF ID	TABLE	EA	EA	EA	EA	EA	EA
PED POLE A	POLE						1
PED POLE B	POLE					1	
PED POLE C	POLE					1	
PED POLE D	POLE					1	
TRAFFIC SIGNAL POLE A	POLE				1		
TRAFFIC SIGNAL POLE B	POLE		1				
TRAFFIC SIGNAL POLE C	POLE			1			
TRAFFIC SIGNAL POLE D	POLE	1					
Grand Total		1	1	1	1	3	1

PROJECT	US 84 (0055-15-072)			
SHEET	263			
		PED POLE FND	416 6031	416 6032
		FOR CONTRACTOR INFO ONLY	DRILL SHAFT (TRF SIG POLE) (30 IN)	DRILL SHAFT (TRF SIG POLE) (36 IN)
TRF ID	TABLE	LF	LF	LF
PED POLE FND A	FOUNDATIONS	5.7		
PED POLE FND B	FOUNDATIONS	5.7		
PED POLE FND C	FOUNDATIONS	5.7		
PED POLE FND D	FOUNDATIONS	5.7		
SIGNAL POLE FND A	FOUNDATIONS			13.2
SIGNAL POLE FND B	FOUNDATIONS			13.2
SIGNAL POLE FND C	FOUNDATIONS			13.2
SIGNAL POLE FND D	FOUNDATIONS		11.3	
Grand Total		22.8	11.3	39.6

FILENAME: pw:\\kh-pw.bentley.com:kh-pw-01\Documents\01 Active Projects\TX-FTW-063586010 - US 84 (Waco Drive)\WAC 005515072\4 - Design\Plan Set\8. Traffic\US84_SIGSUM01_N38TH.dgn
PLOTTED: 12/21/2020

Scott R. Arnold, P.E.

12/21/2020

Kimley»Horn F-928

© 2021

Texas Department of Transportation

TRAFFIC SIGNAL SUMMARY

AT N. 38TH STREET

SHEET 5 OF 5

FED.RD. DIV.NO.	PROJECT ID.	HIGHWAY NO.
6	(SEE TITLE SHEET)	US 84

STATE	DIST.	COUNTY	SHEET NO.
TEXAS	WAC	MCLENNAN	263
CONT.	SECT.	JOB	
0055	15	072	

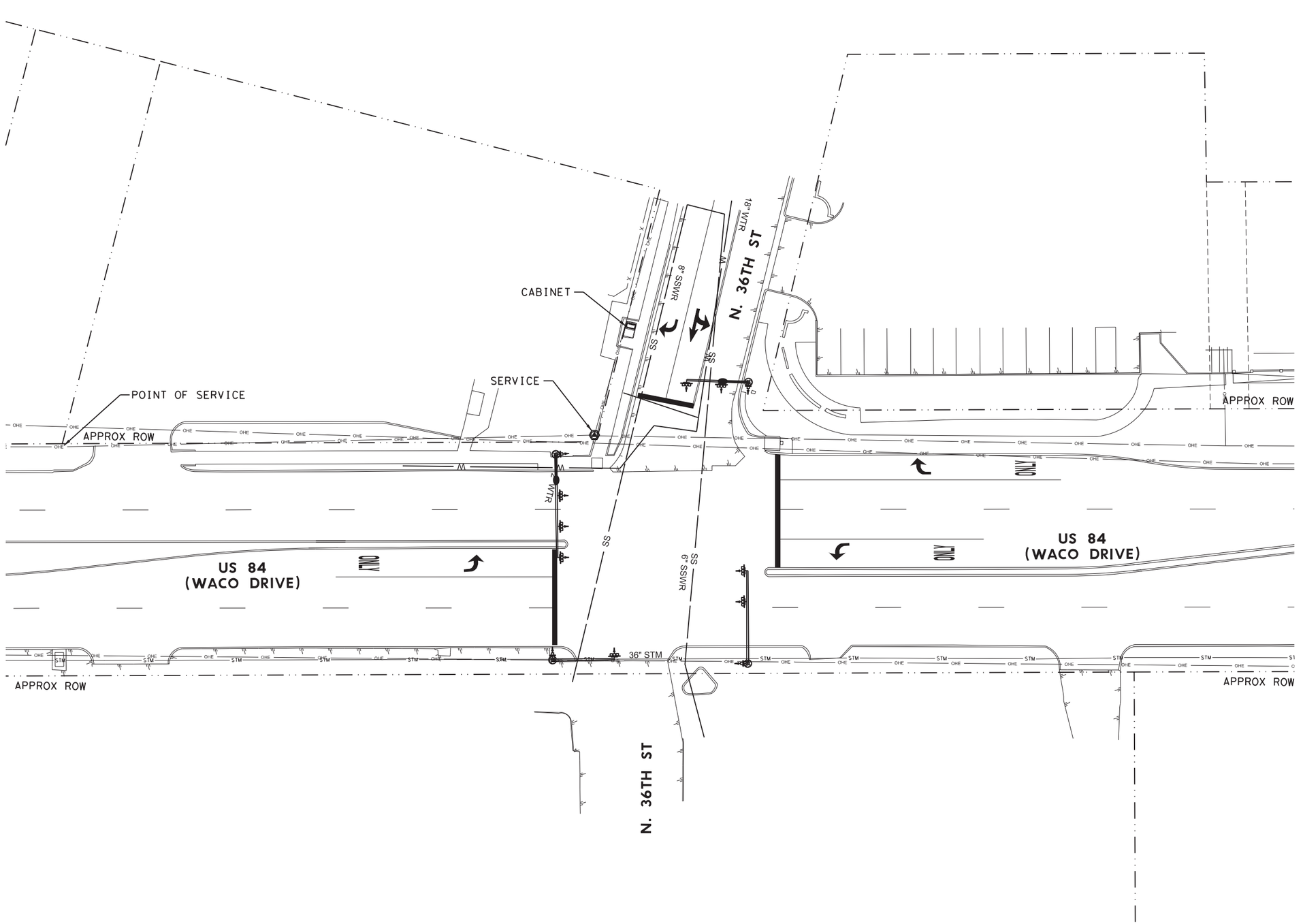

0' 20' 40'

LEGEND

- POINT OF SERVICE
- ELECTRICAL SERVICE
- CONDUIT, PVC
- GROUND BOX

NOTES

1. THE LOCATIONS SHOWN AS EXISTING CONDUIT RUNS ARE APPROXIMATE. THE EXACT LOCATION WILL BE DETERMINED IN THE FIELD. NO EXISTING CONDUIT WILL BE USED, SEE PROPOSED TRAFFIC SIGNAL SHEETS.

STATE OF TEXAS
SCOTT R ARNOLD
96782
LICENSED
PROFESSIONAL ENGINEER

Scott R Arnold, P.E.

12/21/2020

Kimley»Horn F-928

© 2021

Texas Department of Transportation

CONDITION DIAGRAM

AT N. 36TH STREET

SHEET 1 OF 5

FED.RD. DIV.NO.	PROJECT ID.	HIGHWAY NO.
6	(SEE TITLE SHEET)	US 84

STATE	DIST.	COUNTY	SHEET NO.
TEXAS	WAC	MCLENNAN	264
CONT.	SECT.	JOB	
0055	15	072	

FILENAME: pw:\\kh-pw.bentley.com:kh-pw-01\Documents\01 Active Projects\TX-FTW-063586010 - US 84 (Waco Drive)\WAC 005515072\4 - Design\Plan Set\8. Traffic\US84_EXCON_N36TH.dgn
PLOTTED: 12/21/2020

PROPOSED RING AND STRUCTURE

Ø1	Ø2 WALK	Ø3 NOT USED	Ø4 WALK
Ø5	Ø6 WALK	Ø7 NOT USED	Ø8 WALK

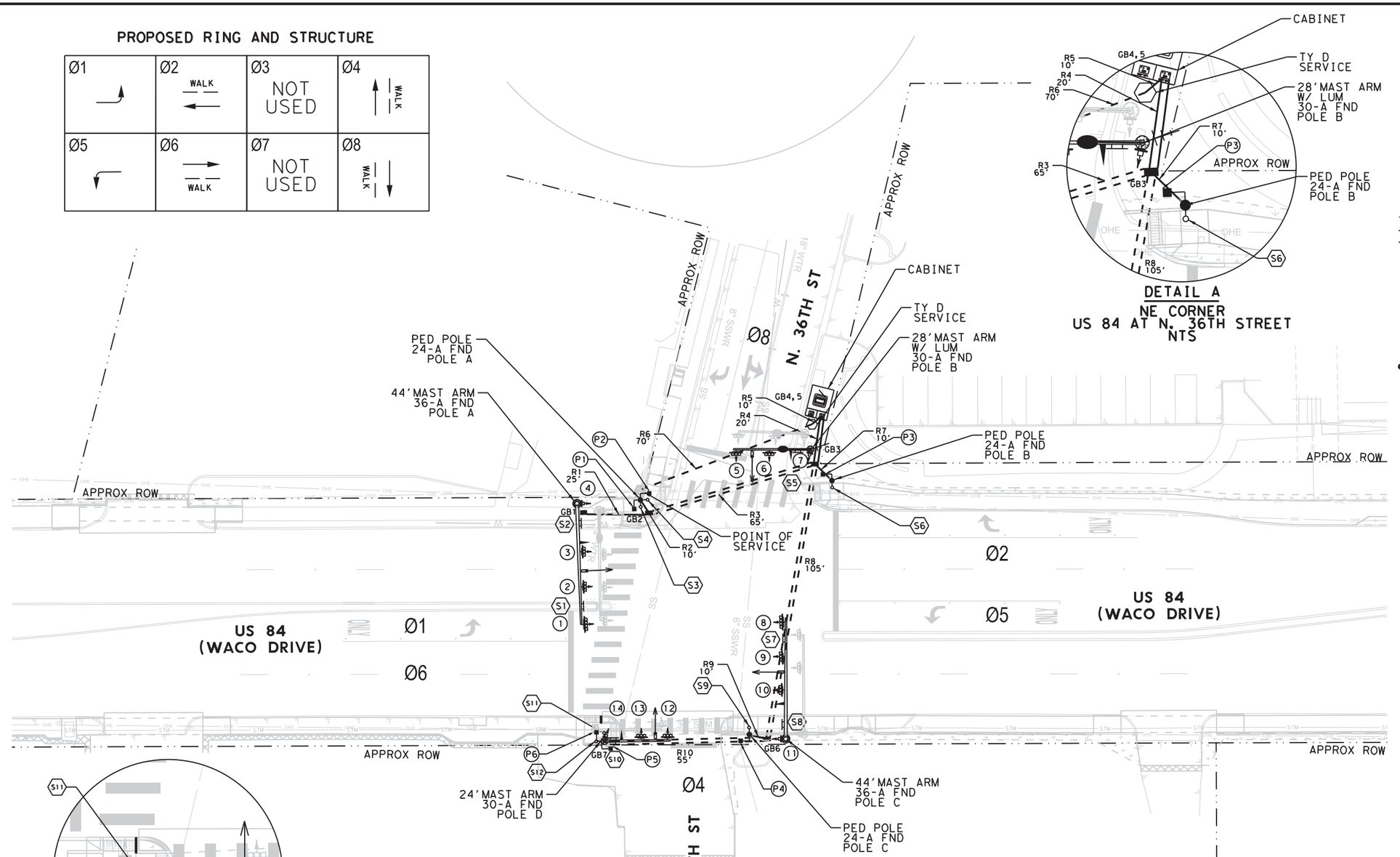

DETAIL A
NE CORNER
US 84 AT N. 36TH STREET
NTS

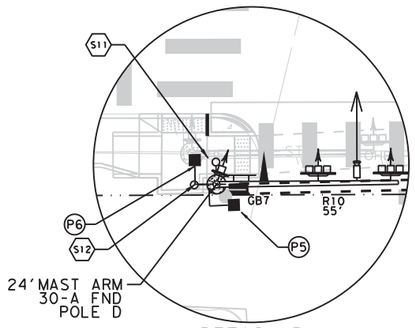

DETAIL B
SW CORNER
US 84 AT N. 36TH STREET
NTS

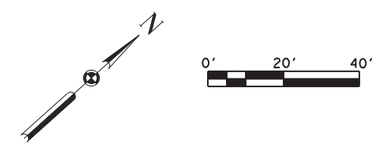

LEGEND

- EXISTING POINT OF SERVICE
- PROPOSED ELECTRICAL SERVICE
- PROPOSED CONDUIT, PVC
- PROPOSED CONDUIT, BORE
- PROPOSED VIVDS
- PROPOSED GROUND BOX (TY D)
- PROPOSED LED COUNTDOWN & APS
- PROPOSED LUMINAIRE
- PROPOSED SIGNAL POLE ASSEMBLY
- PROPOSED OPTICOM DETECTOR (INSTALL ONLY)
- PROPOSED ITS RADIO ANTENNA
- PROPOSED SIGNAL CABINET

NOTES

1. SHORT RUNS FROM THE GROUND BOXES TO THE SIGNAL / PEDESTRIAN FOUNDATIONS WILL NOT BE PAID DIRECTLY, BUT SUBSIDIARY TO VARIOUS BID ITEMS. FOR THE SIGNAL POLES, THIS WILL BE 2 (3") CONDUITS.
2. INSTALL TRAFFIC SIGNAL CONTROLLER FOUNDATION PER TS-CF DETAIL.
3. ALL ROAD BORES TO BE (2) 3" SCH 80.

CONTRACTOR'S INFO ONLY

BORE PIT REMOVAL/REPLACEMENT QUANTITIES WITHIN TEMPORARY RIGHT OF ENTRY:
- *60 SF OF BLOCK SODDING ON NE CORNER
- *25 SF OF BLOCK SODDING ON SE CORNER

ELECTRICAL SERVICE DATA

Electrical Service ID	Plan Sheet Number	Electrical Service Description	Service Conduit Size	Service Conductors No./Size	Safety Switch Amps	Main Ckt. Bkr. Pole/Amps	Two-Pole Contactor Amps	Panelbed/ Loadcenter Amp Rating	Branch Circuit ID	Branch Ckt. Bkr. Pole/Amps	Branch Circuit Amps	KVA Load
ES-11	265	ELEC SRV TY D 120/240 060 (NS)SS(E)PS(U)	2"	3/#6	N/A	2P/60	30	100	Sig. Controller	1P/30	39.7	5
									Luminaires	2P/15	2.3	

Scott R. Arnold, P.E.
03/01/2021

Kimley»Horn F-928

© 2021
Texas Department of Transportation

PROPOSED TRAFFIC SIGNAL

AT N. 36TH STREET

SHEET 2 OF 5

FED.RD. DIV.NO.	PROJECT ID.		HIGHWAY NO.
6	(SEE TITLE SHEET)		US 84
STATE	DIST.	COUNTY	SHEET NO.
TEXAS	WAC	MCLENNAN	265
CONT.	SECT.	JOB	
0055	15	072	

FILENAME: pw:\\kh-pw.bentley.com:kh-pw-01\Documents\01 Active Projects\TX-FTW-063586010 - US 84 (Waco Drive)\WAC 0055150724 - Design\Plan Sets\Traffic\US84_SIG01_N36TH.dgn
PLOTTED: 12/21/2020

SIGNAL WIRING DETAIL

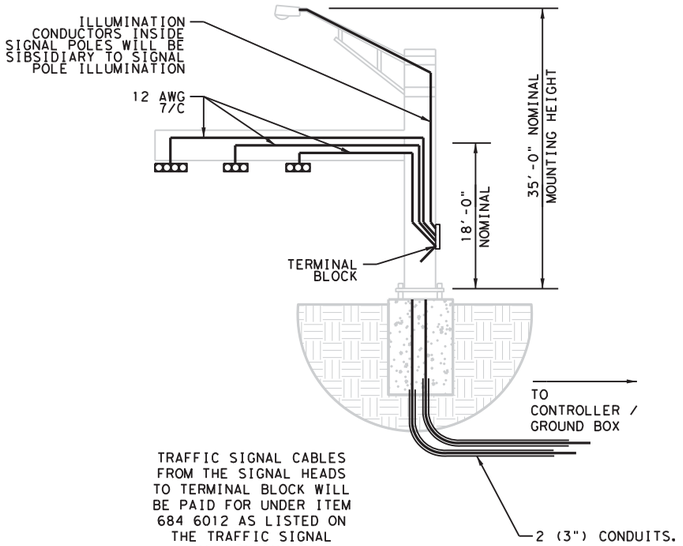

TRAFFIC SIGNAL CABLES FROM THE SIGNAL HEADS TO TERMINAL BLOCK WILL BE PAID FOR UNDER ITEM 684 6012 AS LISTED ON THE TRAFFIC SIGNAL SUMMARY SHEET.

EACH SIGNAL HEAD WILL BE WIRED TO TERMINAL BLOCK.

SIGNAL HEADS

PED SIGNAL HEADS #P1, P2, P3, P4, P5, P6,

SIGNAL HEADS #1, 8

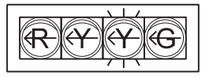

SIGNAL HEADS #2, 3, 5, 6, 9, 10, 12, 13

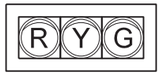

SIGNAL HEADS #4, 7, 11

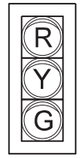

SIGNAL HEADS #14

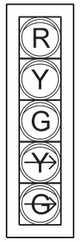

NOTES:

1. TY A SIGNS MOUNTED ON SIGNAL EQUIPMENT IS SHOWN FOR CONTRACTOR INFORMATION ONLY AND SUBSIDIARY TO ITEM 680 6002.

SIGNS

S3 S9

R10-3E(R)

9" X 15"
TY A
ALUM

(0.94 SQ FT)
EACH

S4 S6
S11 S12

R10-3E(L)

9" X 15"
TY A
ALUM

(0.94 SQ FT)
EACH

S1 S7

R10-17T

36" X 42"
TY A
ALUM

(10.5 SQ FT)
EACH

S8

D3-1G

54" X 18"
TY A
ALUM

(6.75 SQ FT)
EACH

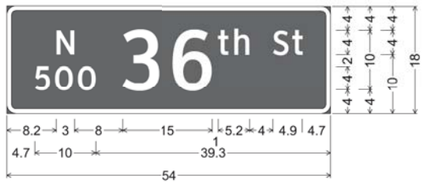

D3-1G;
1.5" Radius, 0.8" Border, White on, Green;
"N", ClearviewHwy-3-W; "500", ClearviewHwy-3-W;
"36", ClearviewHwy-3-W; "th", ClearviewHwy-3-W;
"St", ClearviewHwy-3-W;

S2

D3-1G

54" X 18"
TY A
ALUM

(6.75 SQ FT)
EACH

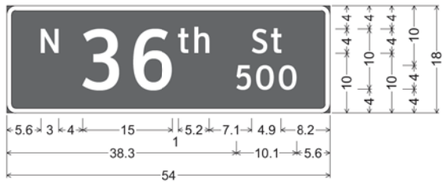

D3-1G;
1.5" Radius, 0.8" Border, White on, Green;
"N", ClearviewHwy-3-W; "36", ClearviewHwy-3-W;
"th", ClearviewHwy-3-W; "St", ClearviewHwy-3-W;
"500", ClearviewHwy-3-W;

S10

D3-1G

84" X 18"
TY A
ALUM

(10.5 SQ FT)
EACH

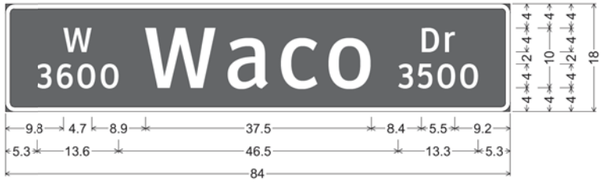

D3-1G;
1.5" Radius, 0.8" Border, White on, Green;
"W", ClearviewHwy-3-W; "3600", ClearviewHwy-3-W; "Waco", ClearviewHwy-3-W;
"Dr", ClearviewHwy-3-W; "3500", ClearviewHwy-3-W;

S5

D3-1G

84" X 18"
TY A
ALUM

(10.5 SQ FT)
EACH

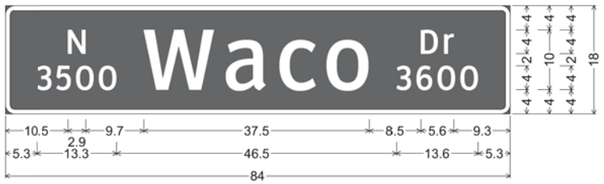

D3-1G;
1.5" Radius, 0.8" Border, White on, Green;
"N", ClearviewHwy-3-W; "3500", ClearviewHwy-3-W; "Waco", ClearviewHwy-3-W;
"Dr", ClearviewHwy-3-W; "3600", ClearviewHwy-3-W;

Scott R. Arnold, P.E.

12/21/2020

Kimley»Horn F-928

© 2021

Texas Department of Transportation

TRAFFIC SIGNAL SIGNS AND HEADS

AT N. 36TH STREET

SHEET 3 OF 5

FED. RD. DIV. NO.	PROJECT ID.	HIGHWAY NO.
6	(SEE TITLE SHEET)	US 84

STATE	DIST.	COUNTY	SHEET NO.
TEXAS	WAC	MCLENNAN	266
CONT.	SECT.	JOB	
0055	15	072	

FILENAME: pw:\\kh-pw.bentley.com:kh-pw-01\Documents\01 Active Projects\TX-FTW-063586010 - US 84 (Waco Drive)\WAC 0055150724 - Design\Plan Set\8. Traffic\US84_SIGSIGN01_N36TH.dgn
PLOTTED: 12/21/2020

PROJECT	US 84 (0055-15-072)
SHEET	267

			618 6023	618 6047	618 6029	618 6054	620 6007	620 6008	620 6009	620 6010	684 6007	684 6012	684 6021	684 6049	6306 6007	OPTICOM CABLE	ITS RADIO CABLE
			CONDT (PVC) (SCH 40) (2")	CONDT (PVC) (SCH 80) (2") (BORE)	CONDT (PVC) (SCH 40) (3")	CONDT (PVC) (SCH 80) (3") (BORE)	ELEC CONDR (NO.8) BARE	ELEC CONDR (NO.8) INSULATED	ELEC CONDR (NO.6) BARE	ELEC CONDR (NO.6) INSULATED	TRF SIG CBL (TY A)(12 AWG)(2 CONDR)	TRF SIG CBL (TY A)(12 AWG)(7 CONDR)	TRF SIG CBL (TY A)(12 AWG)(16 CONDR)	TRF SIG CBL (TY A)(16 AWG)(3 CONDR)	VIVDS CABLING	FOR CONTRACTOR INFO ONLY	FOR CONTRACTOR INFO ONLY
TRF ID	TABLE	Location	LF	LF	LF	LF	LF	LF	LF	LF	LF	LF	LF	LF	LF	LF	LF
CONDUIT R01	CONDUIT	TRENCH			25		25						25		25	25	
CONDUIT R02	CONDUIT	TRENCH			10		10				20			20			
CONDUIT R03-1	CONDUIT	BORE				65	65										
CONDUIT R03-2	CONDUIT	BORE				65	65				130		65	130	65	65	
CONDUIT R04-1	CONDUIT	TRENCH				20	20	40			120		80	80	80	80	20
CONDUIT R04-2	CONDUIT	TRENCH				20	20										
CONDUIT R05	CONDUIT	TRENCH	10					20	10	20							
CONDUIT R06*	CONDUIT	BORE		70													
CONDUIT R07	CONDUIT	TRENCH			10		10				10			10			
CONDUIT R08-1	CONDUIT	BORE				105	105				315		210	105	210	210	
CONDUIT R08-2	CONDUIT	BORE				105	105										
CONDUIT R09	CONDUIT	TRENCH			10		10				10			10			
CONDUIT R10-1	CONDUIT	BORE				55	55				110		55		55	55	
CONDUIT R10-2	CONDUIT	BORE				55	55										
PED POLE A	CONDUIT	IN PED POLE									10			20			
PED POLE B	CONDUIT	IN PED POLE									5			10			
PED POLE C	CONDUIT	IN PED POLE									5			10			
SIGNAL POLE A	CONDUIT	IN SIGNAL POLE										185			50	40	
SIGNAL POLE B	CONDUIT	IN SIGNAL POLE										105			45	30	30
SIGNAL POLE C	CONDUIT	IN SIGNAL POLE										180			50	40	
SIGNAL POLE D	CONDUIT	IN SIGNAL POLE									10	95		20	45	30	
Grand Total			10	70	55	490	545	60	10	20	745	565	435	415	625	575	50

*CONDUIT RUN 6 SHALL INCLUDE A SWEEPING 90° PVC AND SHALL STUB UP AT BOTTOM OF ONCOR POLE.

FILENAME: pw:\\kh-pw.bentley.com:kh-pw-01\Documents\01 Active Projects\TX-FTW-063586010 - US 84 (Waco Drive)\WAC 0055150721\4 - Design\Plan Set\8. Traffic\US84_CONSUM01_N36TH.dgn
PLOTTED: 12/21/2020

Scott R. Arnold, P.E.

12/21/2020

Kimley»Horn F-928

© 2021

Texas Department of Transportation

CONDUIT AND CONDUCTOR SUMMARY

AT N. 36TH STREET

SHEET 4 OF 5

FED.RD. DIV.NO.	PROJECT ID.	HIGHWAY NO.
6	(SEE TITLE SHEET)	US 84

STATE	DIST.	COUNTY	SHEET NO.
TEXAS	WAC	MCLENNAN	267
CONT.	SECT.	JOB	
0055	15	072	

PROJECT	US 84 (0055-15-072)
SHEET	268

		624 6010	628 6144	680 6002	680 6004	682 6018	688 6001	688 6003	6062 6038	6306 6001	6306 6002	CABINET	OPTICOM	TY A SIGN
		GROUND BOX TY D (162922)W/APRON	ELC SRV TY D 120/240 060(NS)SS(E)PS(U)	INSTALL HWY TRF SIG (ISOLATED)	REMOVING TRAFFIC SIGNALS	PED SIG SEC (LED)(COUNTDOWN)	PED DETECT PUSH BUTTON (APS)	PED DETECTOR CONTROLLER UNIT	ITS RADIO (DUAL)(5 GHZ/5 GHZ)-C-U	VIVDS PROSR SYS	VIVDS CAM ASSY FXD LNS	TxDOT CABINET AND CONTROLLER	FOR CONTRACTOR INFO ONLY	FOR CONTRACTOR INFO ONLY
TRF ID	TABLE	EA	EA	EA	EA	EA	EA	EA	EA	EA	EA	EA	EA	SF
CABINET	MISCELLANEOUS											1		
GROUND BOX	MISCELLANEOUS	7												
ITS RADIO	MISCELLANEOUS								1					
OPTICOM	MISCELLANEOUS												4	
P1	MISCELLANEOUS					1								
P2	MISCELLANEOUS					1								
P3	MISCELLANEOUS					1								
P4	MISCELLANEOUS					1								
P5	MISCELLANEOUS					1								
P6	MISCELLANEOUS					1								
PED	MISCELLANEOUS						6	1						
SERVICE	MISCELLANEOUS		1											
SIGN	MISCELLANEOUS													62
SIGNAL	MISCELLANEOUS			1	1									
VIVDS	MISCELLANEOUS									1	4			
Grand Total		7	1	1	1	6	6	1	1	1	4	1	4	62

PROJECT	US 84 (0055-15-072)
SHEET	268

		682 6001	682 6002	682 6003	682 6004	682 6005	682 6006	682 6054	682 6055	682 6056
		VEH SIG SEC (12")LED(GRN)	VEH SIG SEC (12")LED(GRN ARW)	VEH SIG SEC (12")LED(YEL)	VEH SIG SEC (12")LED(YEL ARW)	VEH SIG SEC (12")LED(RED)	VEH SIG SEC (12")LED(RED ARW)	BACKPLATE W/REF BRDR(3 SEC)(VENT)ALUM	BACKPLATE W/REF BRDR(4 SEC)(VENT)ALUM	BACKPLATE W/REF BRDR(5 SEC)(VENT)ALUM
TRF ID	TABLE	EA	EA	EA	EA	EA	EA	EA	EA	EA
SIGNAL HEAD 01	SIGNAL HEAD		1		2		1		1	
SIGNAL HEAD 02	SIGNAL HEAD	1		1		1		1		
SIGNAL HEAD 03	SIGNAL HEAD	1		1		1		1		
SIGNAL HEAD 04	SIGNAL HEAD	1		1		1		1		
SIGNAL HEAD 05	SIGNAL HEAD	1		1		1		1		
SIGNAL HEAD 06	SIGNAL HEAD	1		1		1		1		
SIGNAL HEAD 07	SIGNAL HEAD	1		1		1		1		
SIGNAL HEAD 08	SIGNAL HEAD		1		2		1		1	
SIGNAL HEAD 09	SIGNAL HEAD	1		1		1		1		
SIGNAL HEAD 10	SIGNAL HEAD	1		1		1		1		
SIGNAL HEAD 11	SIGNAL HEAD	1		1		1		1		
SIGNAL HEAD 12	SIGNAL HEAD	1		1		1		1		
SIGNAL HEAD 13	SIGNAL HEAD	1		1		1		1		
SIGNAL HEAD 14	SIGNAL HEAD	1	1	1	1	1				1
Grand Total		12	3	12	5	12	2	11	2	1

PROJECT	US 84 (0055-15-072)
SHEET	268

		686 6025	686 6031	686 6045	687 6001
		INS TRF SIG PL AM (S)1 ARM(24')	INS TRF SIG PL AM(S)1 ARM(28')LUM	INS TRF SIG PL AM(S)1 ARM(44')	PED POLE ASSEMBLY
TRF ID	TABLE	EA	EA	EA	EA
PED POLE A	POLE				1
PED POLE B	POLE				1
PED POLE C	POLE				1
TRAFFIC SIGNAL POLE A	POLE			1	
TRAFFIC SIGNAL POLE B	POLE		1		
TRAFFIC SIGNAL POLE C	POLE			1	
TRAFFIC SIGNAL POLE D	POLE	1			
Grand Total		1	1	2	3

PROJECT	US 84 (0055-15-072)
SHEET	268

		PED POLE FND	416 6031	416 6032
		FOR CONTRACTOR INFO ONLY	DRILL SHAFT (TRF SIG POLE) (30 IN)	DRILL SHAFT (TRF SIG POLE) (36 IN)
TRF ID	TABLE	LF	LF	LF
PED POLE FND A	FOUNDATIONS	5.7		
PED POLE FND B	FOUNDATIONS	5.7		
PED POLE FND C	FOUNDATIONS	5.7		
SIGNAL POLE FND A	FOUNDATIONS			13.2
SIGNAL POLE FND B	FOUNDATIONS		11.3	
SIGNAL POLE FND C	FOUNDATIONS			13.2
SIGNAL POLE FND D	FOUNDATIONS		11.3	
Grand Total		17.1	22.6	26.4

Scott R. Arnold, P.E.

12/21/2020

Kimley»Horn F-928

© 2021

Texas Department of Transportation

TRAFFIC SIGNAL SUMMARY

AT N. 36TH STREET

SHEET 5 OF 5

FED.RD. DIV.NO.	PROJECT ID.	HIGHWAY NO.
6	(SEE TITLE SHEET)	US 84

STATE	DIST.	COUNTY	SHEET NO.
TEXAS	WAC	MCLENNAN	268
CONT.	SECT.	JOB	
0055	15	072	

FILENAME: pw:\\kh-pw.bentley.com:kh-pw-01\Documents\01 Active Projects\TX-FTW-063586010 - US 84 (Waco Drive)\WAC 005515072\4 - Design\Plan Set\8. Traffic\US84_SIGSUM01_N36TH.dgn
PLOTTED: 12/21/2020

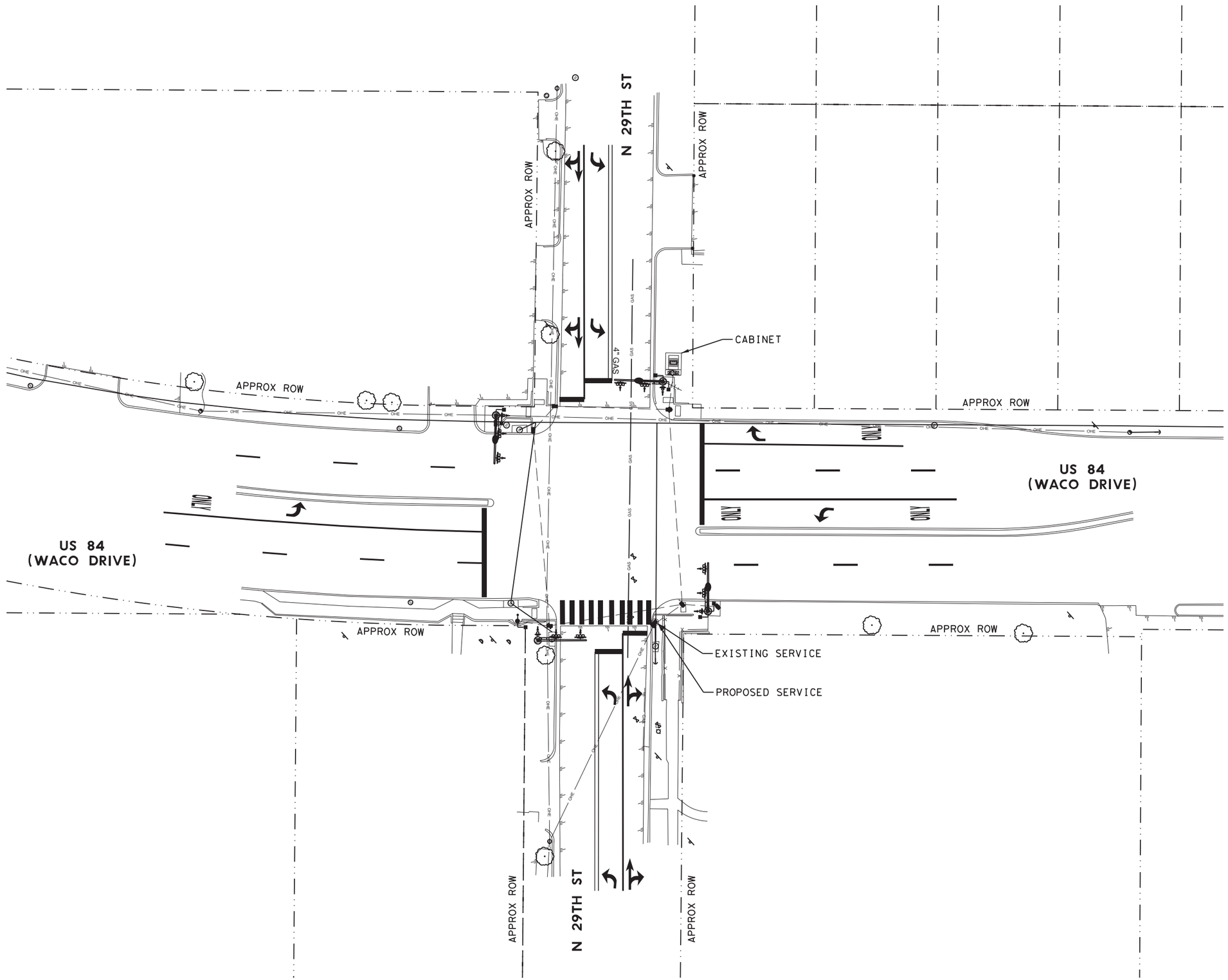

LEGEND

- POINT OF SERVICE
- ELECTRICAL SERVICE
- CONDUIT, PVC
- GROUND BOX

NOTES

1. THE LOCATIONS SHOWN AS EXISTING CONDUIT RUNS ARE APPROXIMATE. THE EXACT LOCATION WILL BE DETERMINED IN THE FIELD. NO EXISTING CONDUIT WILL BE USED, SEE PROPOSED TRAFFIC SIGNAL SHEETS.

STATE OF TEXAS
SCOTT R. ARNOLD
96782
LICENSED
PROFESSIONAL ENGINEER

Scott R. Arnold, P.E.
12/21/2020

Kimley»Horn F-928

© 2021

Texas Department of Transportation

CONDITION DIAGRAM

AT N. 29TH STREET

SHEET 1 OF 5

FED.RD. DIV.NO.	PROJECT ID.	HIGHWAY NO.
6	(SEE TITLE SHEET)	US 84

STATE	DIST.	COUNTY	SHEET NO.
TEXAS	WAC	MCLENNAN	269
CONT.	SECT.	JOB	
0055	15	072	

FILENAME: pw:\\kh-pw.bentley.com:kh-pw-01\Documents\01 Active Projects\TX-FTW-063586010 - US 84 (Waco Drive)\WAC 005515072\4 - Design\Plan Set\8. Traffic\US84_EXCON_N29TH.dgn
PLOTTED: 12/21/2020

ELECTRICAL SERVICE DATA											
Electrical Service ID	Plan Sheet Number	Electrical Service Description	Service Conduit Size	Service Conductors No./Size	Safety Switch Amps	Main Ckt. Bkr. Pole/Amps	Two-Pole Contactor Amps	Panelbed/ Loadcenter Amp Rating	Branch Circuit ID	Branch Ckt. Bkr. Pole/Amps	Branch Circuit Amps	KVA Load
ES-23	270	ELEC SRV TY D 120/240 060 (NS)SS(E)PS(U)	2"	3/#6	N/A	2P/60	30	100	Sig. Controller	1P/40	35.5	4.5
									Luminaires	1P/15	2.3	

PROPOSED RING AND STRUCTURE

Ø1	Ø2 WALK	Ø3 OL-A	Ø4
Ø5	Ø6 WALK	Ø7	Ø8 WALK

CONTRACTOR'S INFO ONLY

BORE PIT REMOVAL/REPLACEMENT QUANTITIES WITHIN TEMPORARY RIGHT OF ENTRY:
- *50 SF OF BLOCK SODDING ON NE CORNER
- *25 SF OF ASPHALT DRIVEWAY ON NW CORNER

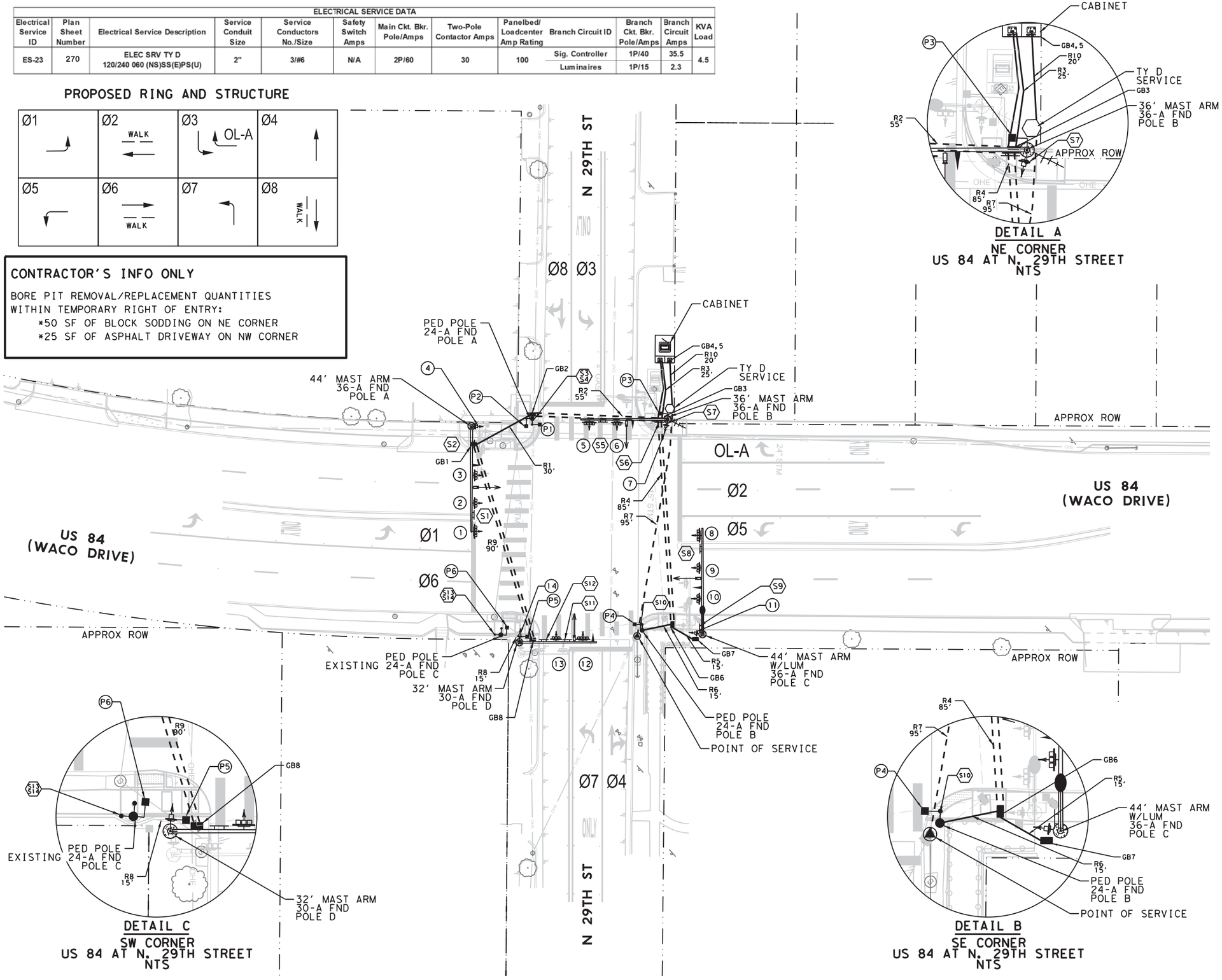

DETAIL A
NE CORNER
US 84 AT N. 29TH STREET
NTS

DETAIL C
SW CORNER
US 84 AT N. 29TH STREET
NTS

DETAIL B
SE CORNER
US 84 AT N. 29TH STREET
NTS

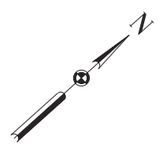

LEGEND

- EXISTING POINT OF SERVICE
- PROPOSED ELECTRICAL SERVICE
- PROPOSED CONDUIT, PVC
- PROPOSED CONDUIT, BORE
- PROPOSED VIVDS
- PROPOSED GROUND BOX (TY D)
- PROPOSED LED COUNTDOWN & APS
- PROPOSED LUMINAIRE
- PROPOSED SIGNAL POLE ASSEMBLY
- PROPOSED OPTICOM DETECTOR (INSTALL ONLY)
- PROPOSED ITS RADIO ANTENNA
- PROPOSED SIGNAL CABINET

NOTES

1. SHORT RUNS FROM THE GROUND BOXES TO THE SIGNAL / PEDESTRIAN FOUNDATIONS WILL NOT BE PAID DIRECTLY, BUT SUBSIDIARY TO VARIOUS BID ITEMS. FOR THE SIGNAL POLES, THIS WILL BE 2 (3") CONDUITS.
2. INSTALL TRAFFIC SIGNAL CONTROLLER FOUNDATION PER TS-CF DETAIL.
3. ALL ROAD BORES TO BE (2) 3" SCH 80.

STATE OF TEXAS — SCOTT R. ARNOLD — 96782 — LICENSED PROFESSIONAL ENGINEER

Scott R. Arnold, P.E.

03/01/2021

Kimley»Horn F-928

© 2021

Texas Department of Transportation

PROPOSED TRAFFIC SIGNAL

AT N. 29TH STREET

SHEET 2 OF 5

FED. RD. DIV. NO.	PROJECT ID.	HIGHWAY NO.
6	(SEE TITLE SHEET)	US 84

STATE	DIST.	COUNTY	SHEET NO.
TEXAS	WAC	MCLENNAN	270
CONT.	SECT.	JOB	
0055	15	072	

FILENAME: pw:\\kh-pw.bentley.com:kh-pw-01\Documents\01 Active Projects\TX-FTW-063586010 - US 84 (Waco Drive)\WAC 0055150724 - Design\Plan Set\8. Traffic\US84_SIG01_N29TH.dgn
PLOTTED: 12/21/2020

SIGNAL WIRING DETAIL

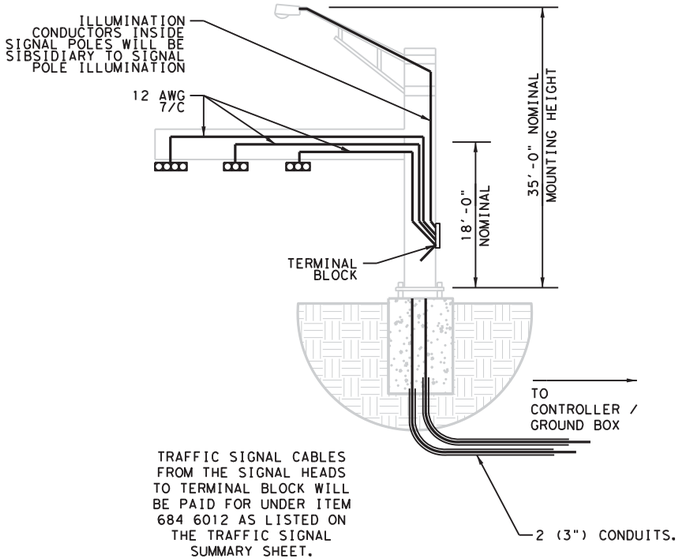

TRAFFIC SIGNAL CABLES FROM THE SIGNAL HEADS TO TERMINAL BLOCK WILL BE PAID FOR UNDER ITEM 684 6012 AS LISTED ON THE TRAFFIC SIGNAL SUMMARY SHEET.

EACH SIGNAL HEAD WILL BE WIRED TO TERMINAL BLOCK.

SIGNAL HEADS

PED SIGNAL HEADS P1, P2, P3, P4, P5, P6

SIGNAL HEADS #1, 5, 8, 12

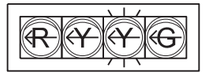

SIGNAL HEADS #2, 3, 6, 9, 10, 13,

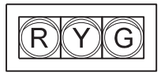

SIGNAL HEADS #4

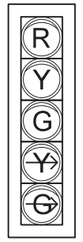

SIGNAL HEADS #7, 11, 14

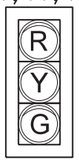

NOTES:

1. TY A SIGNS MOUNTED ON SIGNAL EQUIPMENT IS SHOWN FOR CONTRACTOR INFORMATION ONLY AND SUBSIDIARY TO ITEM 680 6002.

SIGNS

S3 S10 S13

R10-3E(R)

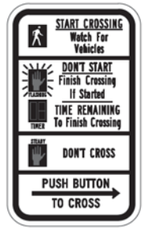

9" X 15" TY A ALUM (0.94 SQ FT) EACH

S4 S7 S14

R10-3E(L)

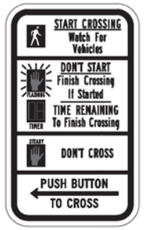

9" X 15" TY A ALUM (0.94 SQ FT) EACH

S1 S5 S8 S11

R10-17T

36" X 42" TY A ALUM (10.5 SQ FT) EACH

S2

D3-1G

60" X 18" TY A ALUM (7.5 SQ FT) EACH

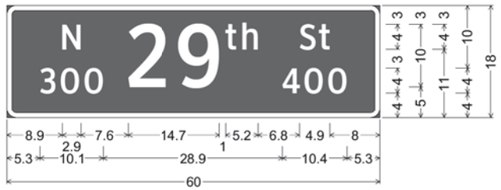

D3-1G;
1.5" Radius, 0.8" Border, White on, Green;
"N", ClearviewHwy-3-W; "300", ClearviewHwy-3-W;
"29", ClearviewHwy-3-W; "th", ClearviewHwy-3-W;
"St", ClearviewHwy-3-W; "400", ClearviewHwy-3-W;

S9

D3-1G

60" X 18" TY A ALUM (7.5 SQ FT) EACH

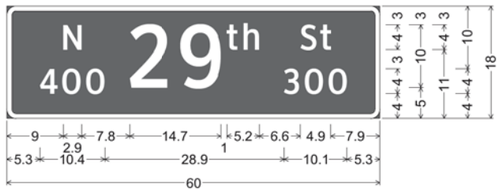

D3-1G;
1.5" Radius, 0.8" Border, White on, Green;
"N", ClearviewHwy-3-W; "400", ClearviewHwy-3-W;
"29", ClearviewHwy-3-W; "th", ClearviewHwy-3-W;
"St", ClearviewHwy-3-W; "300", ClearviewHwy-3-W;

S6

D3-1G

84" X 18" TY A ALUM (10.5 SQ FT) EACH

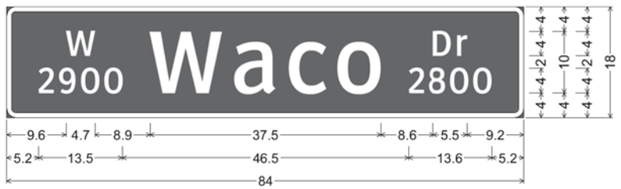

D3-1G;
1.5" Radius, 0.8" Border, White on, Green;
"W", ClearviewHwy-3-W; "2900", ClearviewHwy-3-W; "Waco", ClearviewHwy-3-W;
"Dr", ClearviewHwy-3-W; "2800", ClearviewHwy-3-W;

S12

D3-1G

84" X 18" TY A ALUM (10.5 SQ FT) EACH

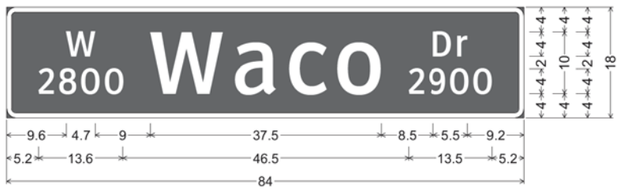

D3-1G;
1.5" Radius, 0.8" Border, White on, Green;
"W", ClearviewHwy-3-W; "2800", ClearviewHwy-3-W; "Waco", ClearviewHwy-3-W;
"Dr", ClearviewHwy-3-W; "2900", ClearviewHwy-3-W;

STATE OF TEXAS — SCOTT A. ARNOLD — 96782 — LICENSED PROFESSIONAL ENGINEER

Scott A. Arnold, P.E.

12/21/2020

Kimley»Horn F-928

© 2021

Texas Department of Transportation

TRAFFIC SIGNAL SIGNS AND HEADS

AT N. 29TH STREET

SHEET 3 OF 5

FED.RD. DIV.NO.	PROJECT ID.	HIGHWAY NO.
6	(SEE TITLE SHEET)	US 84

STATE	DIST.	COUNTY	SHEET NO.
TEXAS	WAC	MCLENNAN	271
CONT.	SECT.	JOB	
0055	15	072	

FILENAME: pw:\\kh-pw.bentley.com:kh-pw-01\Documents\01 Active Projects\TX-FTW-063586010 - US 84 (Waco Drive)\WAC 0055150721\4 - Design\Plan Set\8. Traffic\US84_SIGSIGN01_N29TH.dgn
PLOTTED: 12/21/2020

PROJECT	US 84 (0055-15-072)
SHEET	272

			618 6023	6'8 6047	618 6029	618 6054	620 6007	620 6008	620 6009	620 6010	684 6007	684 6012	684 6021	684 6049	6306 6007	OPTICOM CABLE	ITS RADIO CABLE
			CONDT (PVC) (SCH 40) (2")	CONDT (PVC) (SCH 80) (2" (BORE)	CONDT (PVC) (SCH 40) (3")	CONDT (PVC) (SCH 80) (3") (BORE)	ELEC CONDR (NO.8) BARE	ELEC CONDR (NO.8) INSULATED	ELEC CONDR (NO.6) BARE	ELEC CONDR (NO.6) INSULATED	TRF SIG CBL (TY A)(12 AWG)(2 CONDR)	TRF SIG CBL (TY A)(12 AWG)(7 CONDR)	TRF SIG CBL (TY A)(12 AWG)(16 CONDR)	TRF SIG CBL(TY A)(16 AWG)(3 CONDR)	VIVDS CABLING	FOR CONTRACTOR INFO ONLY	FOR CONTRACTOR INFO ONLY
TRF ID	TABLE	Location	LF	LF	LF	LF	LF	LF	LF	LF	LF	LF	LF	LF	LF	LF	LF
CONDUIT R01	CONDUIT	TRENCH			30		30				60		60	60	60	60	
CONDUIT R02-1	CONDUIT	BORE				55	55				220		110	220	110	110	
CONDUIT R02-2	CONDUIT	BORE				55	55										
CONDUIT R03-1	CONDUIT	TRENCH			25		25				150		100	150	100	100	25
CONDUIT R03-2	CONDUIT	TRENCH			25		25										
CONDUIT R03-3	CONDUIT	TRENCH			25		25	50									
CONDUIT R04-1	CONDUIT	BORE				85	85				85		85	85	85	85	
CONDUIT R04-2	CONDUIT	BORE				85	85	170									
CONDUIT R05	CONDUIT	TRENCH			15		15	30					15		15	15	
CONDUIT R06	CONDUIT	TRENCH			15		15				15			15			
CONDUIT R07*	CONDUIT	BORE		95													
CONDUIT R08	CONDUIT	EXISTING					15				30			15			
CONDUIT R09-1	CONDUIT	BORE				90	90				180		90	180	90	90	
CONDUIT R09-2	CONDUIT	BORE				90	90										
CONDUIT R10	CONDUIT	TRENCH	20					40	20	40							
PED POLE A	CONDUIT	IN PED POLE									10			20			
PED POLE B	CONDUIT	IN PED POLE									5			10			
PED POLE C	CONDUIT	IN PED POLE									10			10			
SIGNAL POLE A	CONDUIT	IN SIGNAL POLE										160			45	40	
SIGNAL POLE B	CONDUIT	IN SIGNAL POLE									5	115		10	40	35	30
SIGNAL POLE C	CONDUIT	IN SIGNAL POLE										165			40	45	
SIGNAL POLE D	CONDUIT	IN SIGNAL POLE										100		10	55	50	
Grand Total			20	95	135	460	610	290	20	40	770	540	460	785	640	630	55

*CONDUIT RUN 7 SHALL INCLUDE A SWEEPING 90° PVC AND SHALL STUB UP AT BOTTOM OF ONCOR POLE.

FILENAME: pw:\\kh-pw.bentley.com:kh-pw-01\Documents\01 Active Projects\TX-FTW-063586010 - US 84 (Waco Drive)\WAC 005515072\4 - Design\Plan Set\8. Traffic\US84_CONSUM01_N29TH.dgn
PLOTTED: 12/21/2020

Scott R. Arnold, P.E.

12/21/2020

Kimley»Horn F-928

© 2021

Texas Department of Transportation

CONDUIT AND CONDUCTOR SUMMARY

AT N. 29TH STREET

SHEET 4 OF 5

FED.RD. DIV.NO.	PROJECT ID.	HIGHWAY NO.
6	(SEE TITLE SHEET)	US 84

STATE	DIST.	COUNTY	SHEET NO.
TEXAS	WAC	MCLENNAN	272
CONT.	SECT.	JOB	
0055	15	072	

PROJECT	US 84 (0055-15-072)												
SHEET	273												
		624 6010	628 6144	680 6002	680 6004	682 6018	688 6001	688 6003	6062 6038	6306 6001	6306 6002	CABINET	OPTICOM	TY A SIGN
		GROUND BOX TY D (162922)W/APRON	ELC SRV TY D 120/240 060(NS)SS(E)PS(U)	INSTALL HWY TRF SIG (ISOLATED)	REMOVING TRAFFIC SIGNALS	PED SIG SEC (LED)(COUNTDOWN)	PED DETECT PUSH BUTTON (APS)	PED DETECTOR CONTROLLER UNIT	ITS RADIO (DUAL)(5 GHZ/5 GHZ)-C-U	VIVDS PROSR SYS	VIVDS CAM ASSY FXD LNS	TxDOT CABINET AND CONTROLLER	FOR CONTRACTOR INFO ONLY	FOR CONTRACTOR INFO ONLY
TRF ID	TABLE	EA	EA	EA	EA	EA	EA	EA	EA	EA	EA	EA	EA	SF
CABINET	MISCELLANEOUS	8										1		
GROUND BOX	MISCELLANEOUS													
ITS RADIO	MISCELLANEOUS								1					
OPTICOM	MISCELLANEOUS												4	
P1	MISCELLANEOUS					1								
P2	MISCELLANEOUS					1								
P3	MISCELLANEOUS					1								
P4	MISCELLANEOUS					1								
P5	MISCELLANEOUS					1								
P6	MISCELLANEOUS					1								
PED	MISCELLANEOUS						6	1						
SERVICE	MISCELLANEOUS		1											
SIGN	MISCELLANEOUS													84
SIGNAL	MISCELLANEOUS			1	1									
VIVDS	MISCELLANEOUS									1	4			
Grand Total		8	1	1	1	6	6	1	1	1	4	1	4	84

PROJECT	US 84 (0055-15-072)									
SHEET	273									
		682 6001	682 6002	682 6003	682 6004	682 6005	682 6006	682 6054	682 6054	682 6055
		VEH SIG SEC (12")LED(GRN)	VEH SIG SEC (12")LED(GRN ARW)	VEH SIG SEC (12")LED(YEL)	VEH SIG SEC (12")LED(YEL ARW)	VEH SIG SEC (12")LED(RED)	VEH SIG SEC (12")LED(RED ARW)	BACKPLATE W/REF BRDR(3 SEC)(VENT)ALUM	BACKPLATE W/REF BRDR(3 SEC)(VENT)ALUM	BACKPLATE W/REF BRDR(4 SEC)(VENT)ALUM
TRF ID	TABLE	EA	EA	EA	EA	EA	EA	EA	EA	EA
SIGNAL HEAD 01	SIGNAL HEAD		1		2		1		1	
SIGNAL HEAD 02	SIGNAL HEAD	1		1		1		1		
SIGNAL HEAD 03	SIGNAL HEAD	1		1		1		1		
SIGNAL HEAD 04	SIGNAL HEAD	1	1	1	1	1				1
SIGNAL HEAD 05	SIGNAL HEAD		1		2		1		1	
SIGNAL HEAD 06	SIGNAL HEAD	1		1		1		1		
SIGNAL HEAD 07	SIGNAL HEAD	1		1		1		1		
SIGNAL HEAD 08	SIGNAL HEAD		1		2		1		1	
SIGNAL HEAD 09	SIGNAL HEAD	1		1		1		1		
SIGNAL HEAD 10	SIGNAL HEAD	1		1		1		1		
SIGNAL HEAD 11	SIGNAL HEAD	1		1		1		1		
SIGNAL HEAD 12	SIGNAL HEAD		1		2		1		1	
SIGNAL HEAD 13	SIGNAL HEAD	1		1		1		1		
SIGNAL HEAD 14	SIGNAL HEAD	1		1		1		1		
Grand Total		10	5	10	9	10	4	9	4	1

PROJECT	US 84 (0055-15-072)				
SHEET	273				
		686 6033	686 6037	686 6045	686 6047	687 6001
		INS TRF SIG PL AM(S)1 ARM(32')	INS TRF SIG PL AM(S)1 ARM(36')	INS TRF SIG PL AM(S)1 ARM(44')	INS TRF SIG PL AM(S)1 ARM(44')LUM	PED POLE ASSEMBLY
TRF ID	TABLE	EA	EA	EA	EA	EA
PED POLE A	POLE					1
PED POLE B	POLE					1
PED POLE C	POLE					1
TRAFFIC SIGNAL POLE A	POLE			1		
TRAFFIC SIGNAL POLE B	POLE		1			
TRAFFIC SIGNAL POLE C	POLE				1	
TRAFFIC SIGNAL POLE D	POLE	1				
Grand Total		1	1	1	1	3

PROJECT	US 84 (0055-15-072)			
SHEET	273			
		PED POLE FND	416 6031	416 6032
		FOR CONTRACTOR INFO ONLY	DRILL SHAFT (TRF SIG POLE) (30 IN)	DRILL SHAFT (TRF SIG POLE) (36 IN)
TRF ID	TABLE	LF	LF	LF
PED POLE FND A	FOUNDATIONS	5.7		
PED POLE FND B	FOUNDATIONS	5.7		
SIGNAL POLE FND A	FOUNDATIONS			13.2
SIGNAL POLE FND B	FOUNDATIONS			13.2
SIGNAL POLE FND C	FOUNDATIONS			13.2
SIGNAL POLE FND D	FOUNDATIONS		11.3	
Grand Total		11.4	11.3	39.6

ONLY FOUNDATIONS FOR PROPOSED POLES ARE SHOWN.

Scott R Arnold, P.E.

12/21/2020

Kimley»Horn F-928

© 2021

Texas Department of Transportation

TRAFFIC SIGNAL SUMMARY

AT N. 29TH STREET

SHEET 5 OF 5

FED.RD. DIV.NO.	PROJECT ID.	HIGHWAY NO.
6	(SEE TITLE SHEET)	US 84

STATE	DIST.	COUNTY	SHEET NO.
TEXAS	WAC	MCLENNAN	273
CONT.	SECT.	JOB	
0055	15	072	

FILENAME: pw:\\kh-pw.bentley.com:kh-pw-01\Documents\01 Active Projects\TX-FTW-063586010 - US 84 (Waco Drive)\WAC 005515072\4 - Design\Plan Set\8. Traffic\US84_SIGSUM01_N29TH.dgn
PLOTTED: 12/21/2020

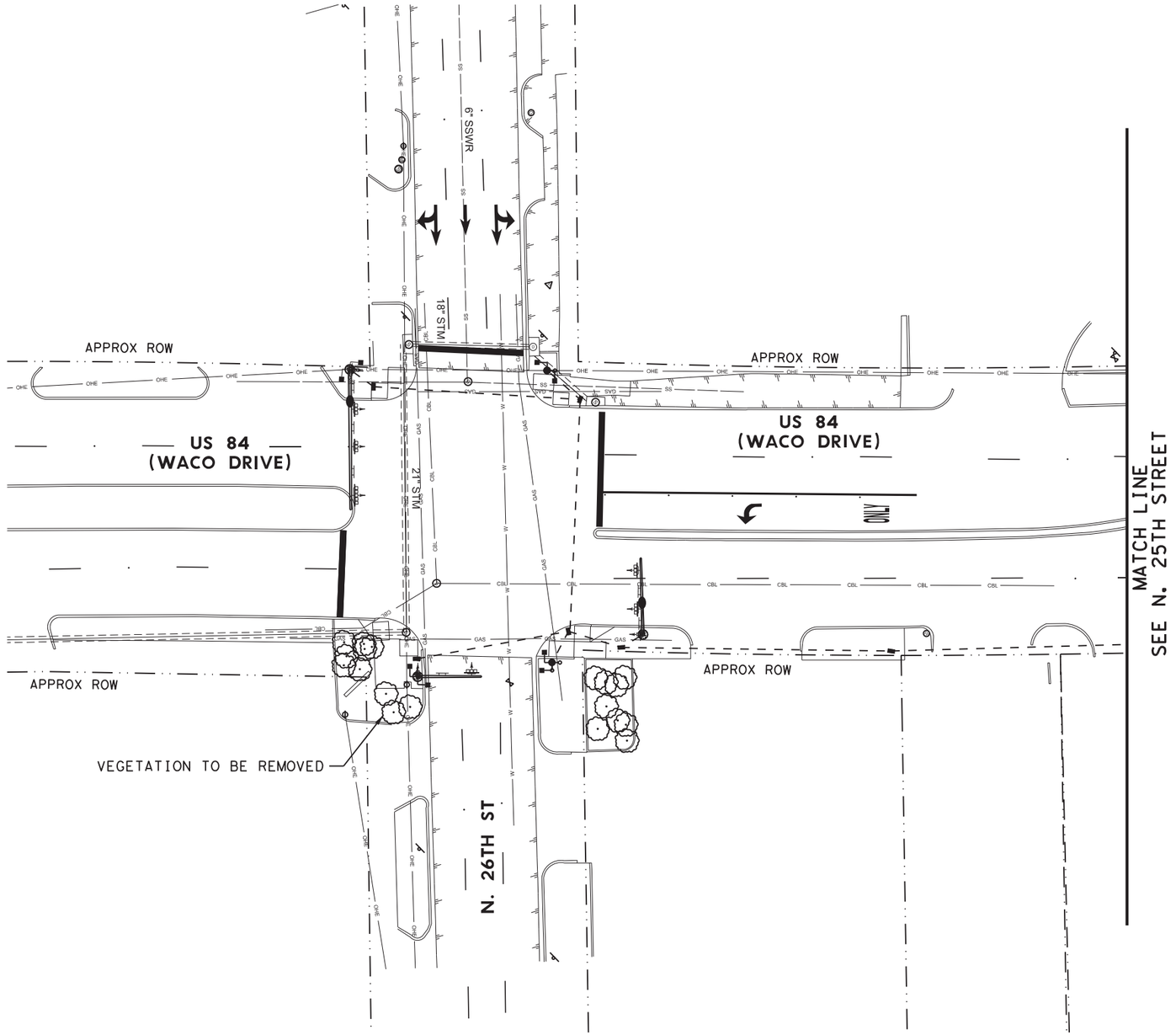

N

0' 20' 40'

LEGEND

- POINT OF SERVICE
- ELECTRICAL SERVICE
- CONDUIT, PVC
- GROUND BOX

NOTES

1. THE LOCATIONS SHOWN AS EXISTING CONDUIT RUNS ARE APPROXIMATE. THE EXACT LOCATION WILL BE DETERMINED IN THE FIELD. NO EXISTING CONDUIT WILL BE USED, SEE PROPOSED TRAFFIC SIGNAL SHEETS.
2. SEE N. 25TH STREET FOR POINT OF SERVICE, CABINET, AND SERVICE.

STATE OF TEXAS
SCOTT K. ARNOLD
96782
LICENSED
PROFESSIONAL ENGINEER

Scott K. Arnold, P.E.
12/21/2020

Kimley»Horn F-928

© 2021

Texas Department of Transportation

CONDITION DIAGRAM

AT N. 26TH STREET

SHEET 1 OF 5

FED.RD. DIV.NO.	PROJECT ID.	HIGHWAY NO.
6	(SEE TITLE SHEET)	US 84

STATE	DIST.	COUNTY	SHEET NO.
TEXAS	WAC	MCLENNAN	274
CONT.	SECT.	JOB	
0055	15	072	

FILENAME: pw:\\kh-pw.bentley.com:kh-pw-01\Documents\01 Active Projects\TX-FTW-063586010 - US 84 (Waco Drive)\WAC 005515072\4 - Design\Plan Set\8. Traffic\US84_EXCON_N26TH.dgn
PLOTTED: 12/21/2020

PROPOSED RING AND STRUCTURE

Ø1 NOT USED	Ø2 WALK ←	Ø3 NOT USED	Ø4 NOT USED
Ø5 ↙	Ø6 → WALK	Ø7 NOT USED	Ø8 WALK ↓

CONTRACTOR'S INFO ONLY

BORE PIT REMOVAL/REPLACEMENT QUANTITIES WITHIN TEMPORARY RIGHT OF ENTRY:

- *25 SF OF BLOCK SODDING ON NE CORNER
- *10 LF CURB AND 150 LF OF LANDSCAPING AND IRRIGATION ON SE CORNER

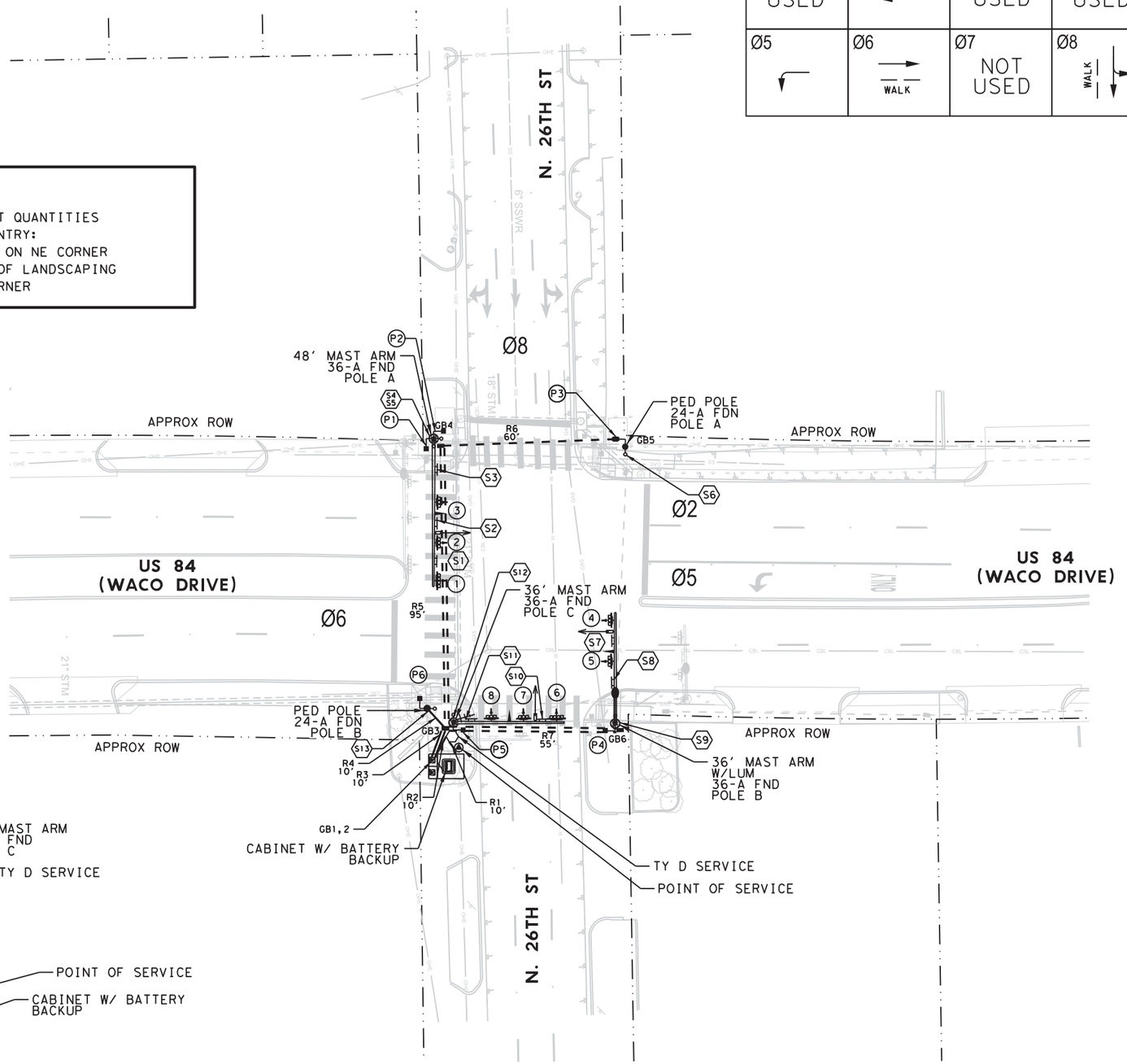

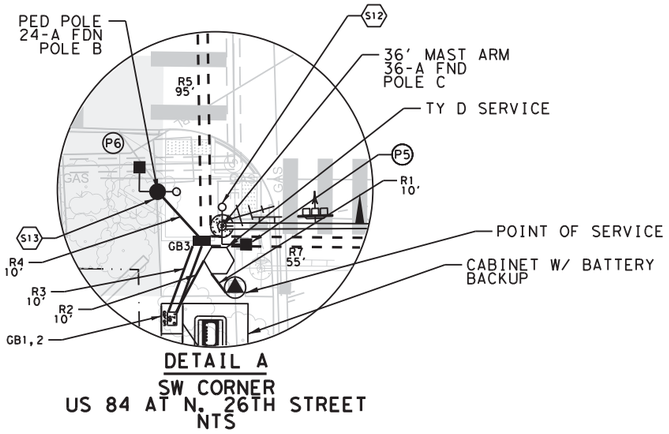

DETAIL A
SW CORNER
US 84 AT N. 26TH STREET
NTS

N
0' 20' 40'

LEGEND

- PROPOSED POINT OF SERVICE
- PROPOSED ELECTRICAL SERVICE
- PROPOSED CONDUIT, PVC
- PROPOSED CONDUIT, BORE
- PROPOSED VIVDS
- PROPOSED GROUND BOX (TY D)
- PROPOSED LED COUNTDOWN & APS
- PROPOSED LUMINAIRE
- PROPOSED SIGNAL POLE ASSEMBLY
- PROPOSED OPTICOM DETECTOR (INSTALL ONLY)
- PROPOSED ITS RADIO ANTENNA
- PROPOSED SIGNAL CABINET

NOTES:

1. SHORT RUNS FROM THE GROUND BOXES TO THE SIGNAL / PEDESTRIAN FOUNDATIONS WILL NOT BE PAID DIRECTLY, BUT SUBSIDIARY TO VARIOUS BID ITEMS. FOR THE SIGNAL POLES, THIS WILL BE 2 (3") CONDUITS.
2. INSTALL TRAFFIC SIGNAL CONTROLLER FOUNDATION PER TS-CF DETAIL.
3. ALL ROAD BORES TO BE (2) 3" SCH 80.

ELECTRICAL SERVICE DATA

Electrical Service ID	Plan Sheet Number	Electrical Service Description	Service Conduit Size	Service Conductors No./Size	Safety Switch Amps	Main Ckt. Bkr. Pole/Amps	Two-Pole Contactor Amps	Panelbed/ Loadcenter Amp Rating	Branch Circuit ID	Branch Ckt. Bkr. Pole/Amps	Branch Circuit Amps	KVA Load
ES-10	275	ELEC SRV TY D 120/240 060 (NS)SS(E)PS(U)	2"	3/#6	N/A	2P/60	30	100	Sig. Controller	1P/30	25.8	3.4
									Luminaires	1P/15	2.3	

Scott R. Arnold, P.E.
03/01/2021

Kimley»Horn F-928

© 2021
Texas Department of Transportation

PROPOSED TRAFFIC SIGNAL

AT N. 26TH STREET

SHEET 2 OF 5

FED. RD. DIV. NO.	PROJECT ID.		HIGHWAY NO.
6	(SEE TITLE SHEET)		US 84
STATE	DIST.	COUNTY	SHEET NO.
TEXAS	WAC	MCLENNAN	275
CONT.	SECT.	JOB	
0055	15	072	

FILENAME: pw:\\kh-pw.bentley.com:kh-pw-01\Documents\01 Active Projects\TX-FTW-063586010 - US 84 (Waco Drive)\WAC 005515072\4 - Design\Plan Set\8. Traffic\US84_SIG01_N26TH.dgn
PLOTTED: 12/21/2020

SIGNAL WIRING DETAIL

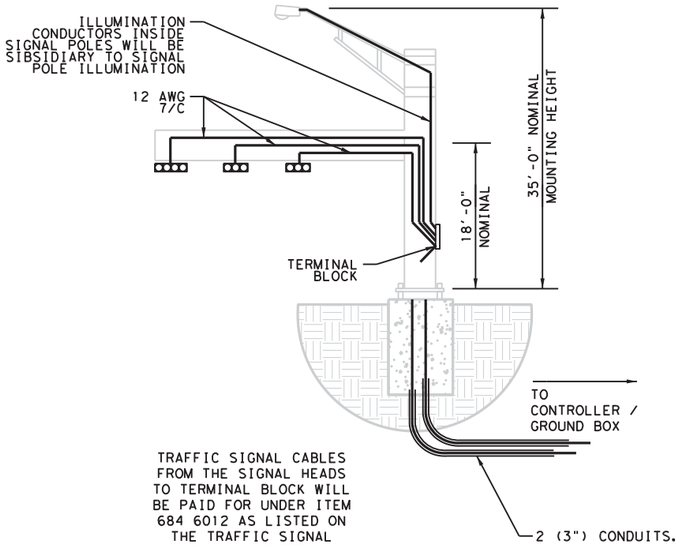

TRAFFIC SIGNAL CABLES FROM THE SIGNAL HEADS TO TERMINAL BLOCK WILL BE PAID FOR UNDER ITEM 684 6012 AS LISTED ON THE TRAFFIC SIGNAL SUMMARY SHEET.

EACH SIGNAL HEAD WILL BE WIRED TO TERMINAL BLOCK.

SIGNAL HEADS

PED SIGNAL HEADS P1, P2, P3, P4, P5, P6

SIGNAL HEAD #1

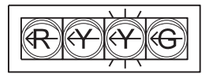

SIGNAL HEADS #2, 3, 4, 5, 7, 8

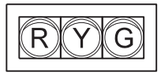

SIGNAL HEAD #6

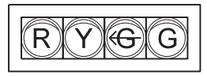

NOTES:

1. TY A SIGNS MOUNTED ON SIGNAL EQUIPMENT IS SHOWN FOR CONTRACTOR INFORMATION ONLY AND SUBSIDIARY TO ITEM 680 6002.

SIGNS

S4 S9 — R10-3E(R)

9" X 15" TY A ALUM (0.94 SQ FT) EACH

S5 S6 S12 S13 — R10-3E(L)

9" X 15" TY A ALUM (0.94 SQ FT) EACH

S2 — R6-2(L)

30" X 36" TY A ALUM (7.5 SQ FT) EACH

S7 — R6-2(R)

30" X 36" TY A ALUM (7.5 SQ FT) EACH

S1 — R10-17T

36" X 42" TY A ALUM (10.5 SQ FT) EACH

S10 — R3-8 MS

30" X 30" TY A ALUM (6.25 SQ FT) EACH

S3 — D3-1G

60" X 18" TY A ALUM (7.5 SQ FT) EACH

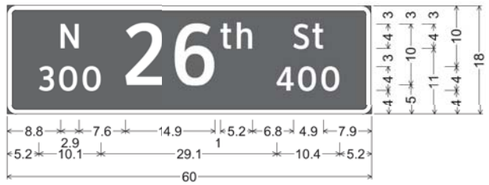

D3-1G;
1.5" Radius, 0.8" Border, White on, Green;
"N", ClearviewHwy-3-W; "300", ClearviewHwy-3-W;
"26", ClearviewHwy-3-W; "th", ClearviewHwy-3-W;
"St", ClearviewHwy-3-W; "400", ClearviewHwy-3-W;

S8 — D3-1G

60" X 18" TY A ALUM (7.5 SQ FT) EACH

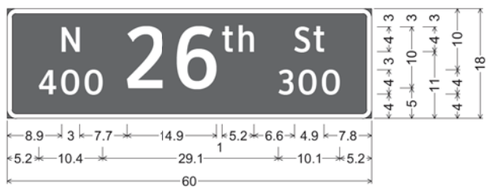

D3-1G;
1.5" Radius, 0.8" Border, White on, Green;
"N", ClearviewHwy-3-W; "400", ClearviewHwy-3-W;
"26", ClearviewHwy-3-W; "th", ClearviewHwy-3-W;
"St", ClearviewHwy-3-W; "300", ClearviewHwy-3-W;

S11 — D3-1G

84" X 18" TY A ALUM (10.5 SQ FT) EACH

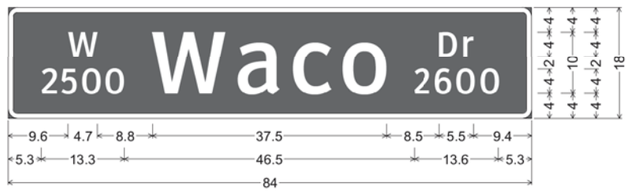

D3-1G;
1.5" Radius, 0.8" Border, White on, Green;
"W", ClearviewHwy-3-W; "2500", ClearviewHwy-3-W; "Waco", ClearviewHwy-3-W;
"Dr", ClearviewHwy-3-W; "2600", ClearviewHwy-3-W;

STATE OF TEXAS — 96782 — LICENSED PROFESSIONAL ENGINEER

Scott R. Arnold, P.E.

12/21/2020

Kimley»Horn F-928

© 2021

Texas Department of Transportation

TRAFFIC SIGNAL SIGNS AND HEADS

AT N. 26TH STREET

SHEET 3 OF 5

FED.RD. DIV.NO.	PROJECT ID.	HIGHWAY NO.
6	(SEE TITLE SHEET)	US 84

STATE	DIST.	COUNTY	SHEET NO.
TEXAS	WAC	MCLENNAN	276
CONT.	SECT.	JOB	
0055	15	072	

FILENAME: pw:\\kh-pw.bentley.com:kh-pw-01\Documents\01 Active Projects\TX-FTW-063586010 - US 84 (Waco Drive)\WAC 0055150724 - Design\Plan Set\8. Traffic\US84_SIGSIGN01_N26TH.dgn
PLOTTED: 12/21/2020

PROJECT	US 84 (0055-15-072)															
SHEET	277															
			618 6046	618 6029	618 6054	520 6007	620 6008	620 6009	620 6010	684 6007	684 6012	684 6021	684 6049	6306 6007	OPTICOM CABLE	ITS RADIO CABLE
			CONDT (PVC) (SCH 80) (2")	CONDT (PVC) (SCH 40) (3")	CONDT (PVC) (SCH 80) (3") (BORE)	ELEC CONDR (NO.8) BARE	ELEC CONDR (NO.8) INSULATED	ELEC CONDR (NO.6) BARE	ELEC CONDR (NO.6) INSULATED	TRF SIG CBL (TY A)(12 AWG)(2 CONDR)	TRF SIG CBL (TY A)(12 AWG)(7 CONDR)	TRF SIG CBL (TY A)(12 AWG)(16 CONDR)	TRF SIG CBL (TY A)(16 AWG)(3 CONDR)	VIVDS CABLING	FOR CONTRACTOR INFO ONLY	FOR CONTRACTOR INFO ONLY
TRF ID	TABLE	Location	LF	LF	LF	LF	LF	LF	LF	LF	LF	LF	LF	LF	LF	LF
CONDUIT R01*	CONDUIT	TRENCH	10													
CONDUIT R02	CONDUIT	TRENCH		10			20	10	20							
CONDUIT R03-1	CONDUIT	TRENCH		10		10	20			60		30	20	30	30	10
CONDUIT R03-2	CONDUIT	TRENCH		10		10										
CONDUIT R04	CONDUIT	TRENCH		10		10				10			10			
CONDUIT R05-1	CONDUIT	BORE			95	95				285		95	95	95	95	
CONDUIT R05-2	CONDUIT	BORE			95	95										
CONDUIT R06	CONDUIT	BORE			50	50				50			50			
CONDUIT R07-1	CONDUIT	BORE			55	55	110			55		55		55	55	
CONDUIT R07-2	CONDUIT	BORE			55	55										
PED POLE A	CONDUIT	IN PED POLE								5			10			
PED POLE B	CONDUIT	IN PED POLE								5			10			
SIGNAL POLE A	CONDUIT	IN SIGNAL POLE								10	170		20	55	50	
SIGNAL POLE B	CONDUIT	IN SIGNAL POLE								5	100		10	55	50	
SIGNAL POLE C	CONDUIT	IN SIGNAL POLE								5	140		10	50	45	30
Grand Total			10	40	350	380	150	10	20	490	410	180	235	340	325	40

*CONDUIT RUN 1 SHALL INCLUDE A SWEEPING 90° PVC AND SHALL STUB UP AT BOTTOM OF ONCOR POLE.

Scott R. Arnold, P.E.

12/21/2020

Kimley»Horn F-928

© 2021

Texas Department of Transportation

CONDUIT AND CONDUCTOR SUMMARY

AT N. 26TH STREET

SHEET 4 OF 5

FED.RD. DIV.NO.	PROJECT ID.	HIGHWAY NO.
6	(SEE TITLE SHEET)	US 84

STATE	DIST.	COUNTY	SHEET NO.
TEXAS	WAC	MCLENNAN	277
CONT.	SECT.	JOB	
0055	15	072	

FILENAME: pw:\\kh-pw.bentley.com:kh-pw-01\Documents\01 Active Projects\TX-FTW-063586010 - US 84 (Waco Drive)\WAC 005515072\4 - Design\Plan Set\8. Traffic\US84_CONSUM01_N26TH.dgn
PLOTTED: 12/21/2020

PROJECT	US 84 (0055-15-072)														
SHEET	278														
		624 6010	628 6144	680 6002	680 6004	682 6018	688 6001	688 6003	752 6015	6058 6001	6062 6038	6306 6001	6306 6002	CABINET	OPTICOM	TY A SIGN
		GROUND BOX TY D (162922)W/APRON	ELC SRV TY D 120/240 060(NS)SS(E)PS(U)	INSTALL HWY TRF SIG (ISOLATED)	REMOVING TRAFFIC SIGNALS	PED SIG SEC (LED)(COUNTDOWN)	PED DETECT PUSH BUTTON (APS)	PED DETECTOR CONTROLLER UNIT	TREE AND BRUSH REMOVAL	BBU SYSTEM (EXTERNAL BATT CABINET)	ITS RADIO (DUAL)(5 GHZ/5 GHZ)-C-U	VIVDS PROSR SYS	VIVDS CAM ASSY FXD LNS	TxDOT CABINET AND CONTROLLER	FOR CONTRACTOR INFC ONLY	FOR CONTRACTOR INFO ONLY
TRF ID	TABLE	EA	EA	EA	EA	EA	EA	EA	AC	EA	EA	EA	EA	EA	EA	SF
BBU	MISCELLANEOUS									1						
CABINET	MISCELLANEOUS													1		
GROUND BOX	MISCELLANEOUS	6														
ITS RADIO	MISCELLANEOUS										1					
OPTICOM	MISCELLANEOUS														3	
P1	MISCELLANEOUS					1										
P2	MISCELLANEOUS					1										
P3	MISCELLANEOUS					1										
P4	MISCELLANEOUS					1										
P5	MISCELLANEOUS					1										
P6	MISCELLANEOUS					1										
PED	MISCELLANEOUS						6	1								
SERVICE	MISCELLANEOUS		1													
SIGN	MISCELLANEOUS															63
SIGNAL	MISCELLANEOUS			1	1											
VIVDS	MISCELLANEOUS											1	3			
TREE & BRUSH									0.004							
Grand Total		6	1	1	1	6	6	1	0.004	1	1	1	3	1	3	63

PROJECT	US 84 (0055-15-072)								
SHEET	278								
		682 6001	682 6002	682 6003	682 6004	682 6005	682 6006	682 6054	682 6055
		VEH SIG SEC (12")LED(GRN)	VEH SIG SEC (12")LED(GRN ARW)	VEH SIG SEC (12")LED(YEL)	VEH SIG SEC (12")LED(YEL ARW)	VEH SIG SEC (12")LED(RED)	VEH SIG SEC (12")LED(RED ARW)	BACKPLATE W/REF BRDR(3 SEC)(VENT)ALUM	BACKPLATE W/REF BRDR(4 SEC)(VENT)ALUM
TRF ID	TABLE	EA	EA	EA	EA	EA	EA	EA	EA
SIGNAL HEAD 01	SIGNAL HEAD		1		2		1		1
SIGNAL HEAD 02	SIGNAL HEAD	1		1		1		1	
SIGNAL HEAD 03	SIGNAL HEAD	1		1		1		1	
SIGNAL HEAD 04	SIGNAL HEAD	1		1		1		1	
SIGNAL HEAD 05	SIGNAL HEAD	1		1		1		1	
SIGNAL HEAD 06	SIGNAL HEAD	1	1	1		1			1
SIGNAL HEAD 07	SIGNAL HEAD	1		1		1		1	
SIGNAL HEAD 08	SIGNAL HEAD	1		1		1		1	
Grand Total		7	2	7	2	7	1	6	2

PROJECT	US 84 (0055-15-072)			
SHEET	278			
		686 6037	686 6039	686 6049	687 6001
		INS TRF SIG PL AM(S)1 ARM(36')	INS TRF SIG PL AM(S)1 ARM(36')LUM	INS TRF SIG PL AM(S)1 ARM(48')	PED POLE ASSEMBLY
TRF ID	TABLE	EA	EA	EA	EA
PED POLE A	POLE				1
PED POLE B	POLE				1
TRAFFIC SIGNAL POLE A	POLE			1	
TRAFFIC SIGNAL POLE B	POLE		1		
TRAFFIC SIGNAL POLE C	POLE	1			
Grand Total		1	1	1	2

PROJECT	US 84 (0055-15-072)		
SHEET	278		
		PED POLE FND	416 6032
		FOR CONTRACTOR INFO ONLY	DRILL SHAFT (TRF SIG POLE) (36 IN)
TRF ID	TABLE	LF	LF
PED POLE FND A	FOUNDATIONS	5.7	
PED POLE FND B	FOUNDATIONS	5.7	
SIGNAL POLE FND A	FOUNDATIONS		13.2
SIGNAL POLE FND B	FOUNDATIONS		13.2
SIGNAL POLE FND C	FOUNDATIONS		13.2
Grand Total		11.4	39.6

Scott R. Arnold, P.E.

12/21/2020

Kimley»Horn F-928

© 2021

Texas Department of Transportation

TRAFFIC SIGNAL SUMMARY

AT N. 26TH STREET

SHEET 5 OF 5

FED. RD. DIV. NO.	PROJECT ID.	HIGHWAY NO.
6	(SEE TITLE SHEET)	US 84

STATE	DIST.	COUNTY	SHEET NO.
TEXAS	WAC	MCLENNAN	278
CONT.	SECT.	JOB	
0055	15	072	

FILENAME: pw:\\kh-pw.bentley.com:kh-pw-01\Documents\01 Active Projects\TX-FTW-063586010 - US 84 (Waco Drive)\WAC 0055150724 - Design\Plan Set\8. Traffic\US84_SIGSUM01_N26TH.dgn
PLOTTED: 12/21/2020

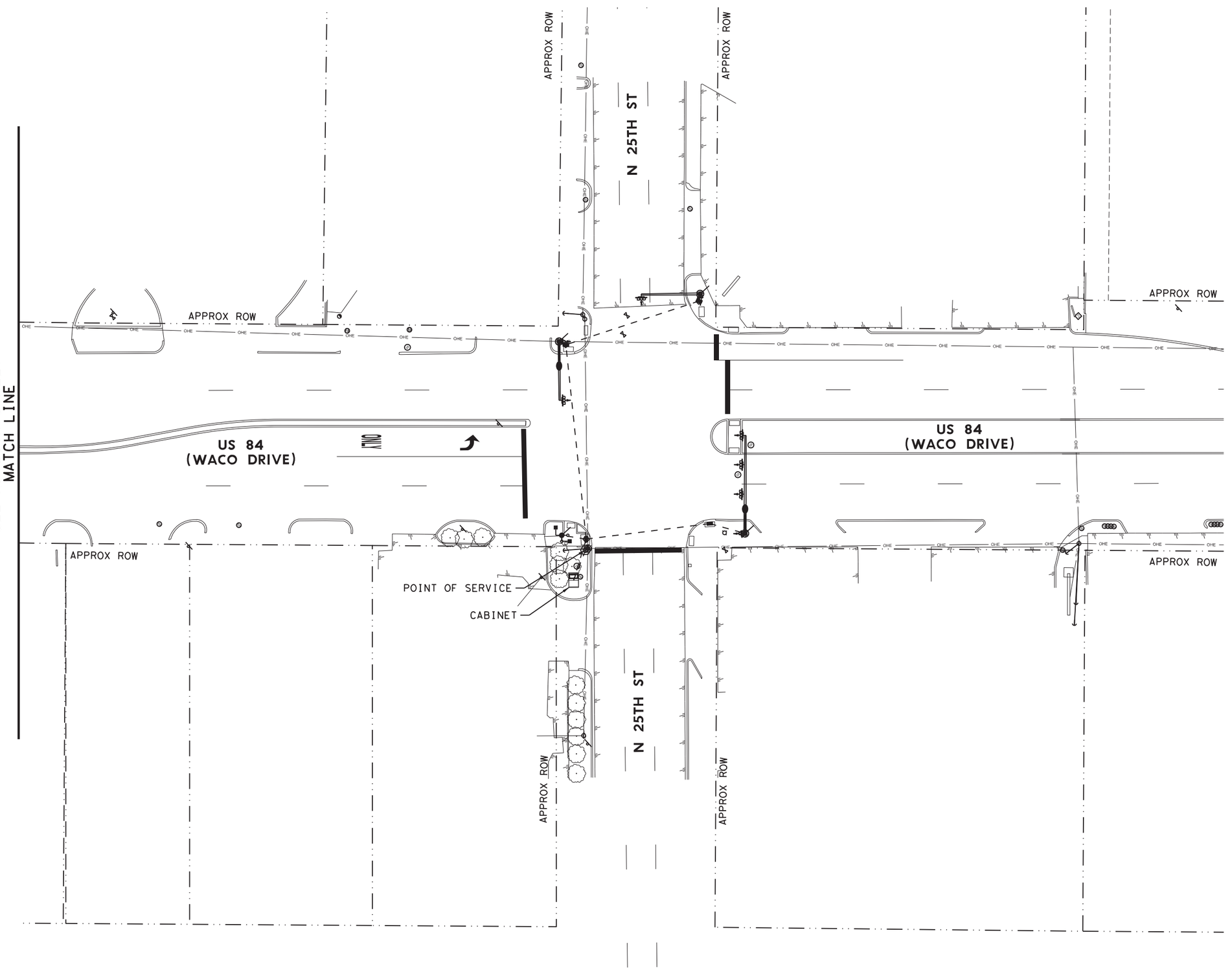

N

0' 20' 40'

LEGEND

- POINT OF SERVICE
- ELECTRICAL SERVICE
- CONDUIT, PVC
- GROUND BOX

NOTES

1. THE LOCATIONS SHOWN AS EXISTING CONDUIT RUNS ARE APPROXIMATE. THE EXACT LOCATION WILL BE DETERMINED IN THE FIELD. NO EXISTING CONDUIT WILL BE USED, SEE PROPOSED TRAFFIC SIGNAL SHEETS.

STATE OF TEXAS
SCOTT R. ARNOLD
96782
LICENSED
PROFESSIONAL ENGINEER

Scott R. Arnold, P.E.
12/21/2020

Kimley»Horn F-928

© 2021

Texas Department of Transportation

CONDITION DIAGRAM

AT N. 25TH STREET

SHEET 1 OF 5

FED. RD. DIV. NO.	PROJECT ID.	HIGHWAY NO.
6	(SEE TITLE SHEET)	US 84

STATE	DIST.	COUNTY	SHEET NO.
TEXAS	WAC	MCLENNAN	279
CONT.	SECT.	JOB	
0055	15	072	

FILENAME: pw:\\kh-pw.bentley.com:kh-pw-01\Documents\01 Active Projects\TX-FTW-063586010 - US 84 (Waco Drive)\WAC 0055150724 - Design\Plan Set\8. Traffic\US84_EXCON_N25TH.dgn
PLOTTED: 12/21/2020

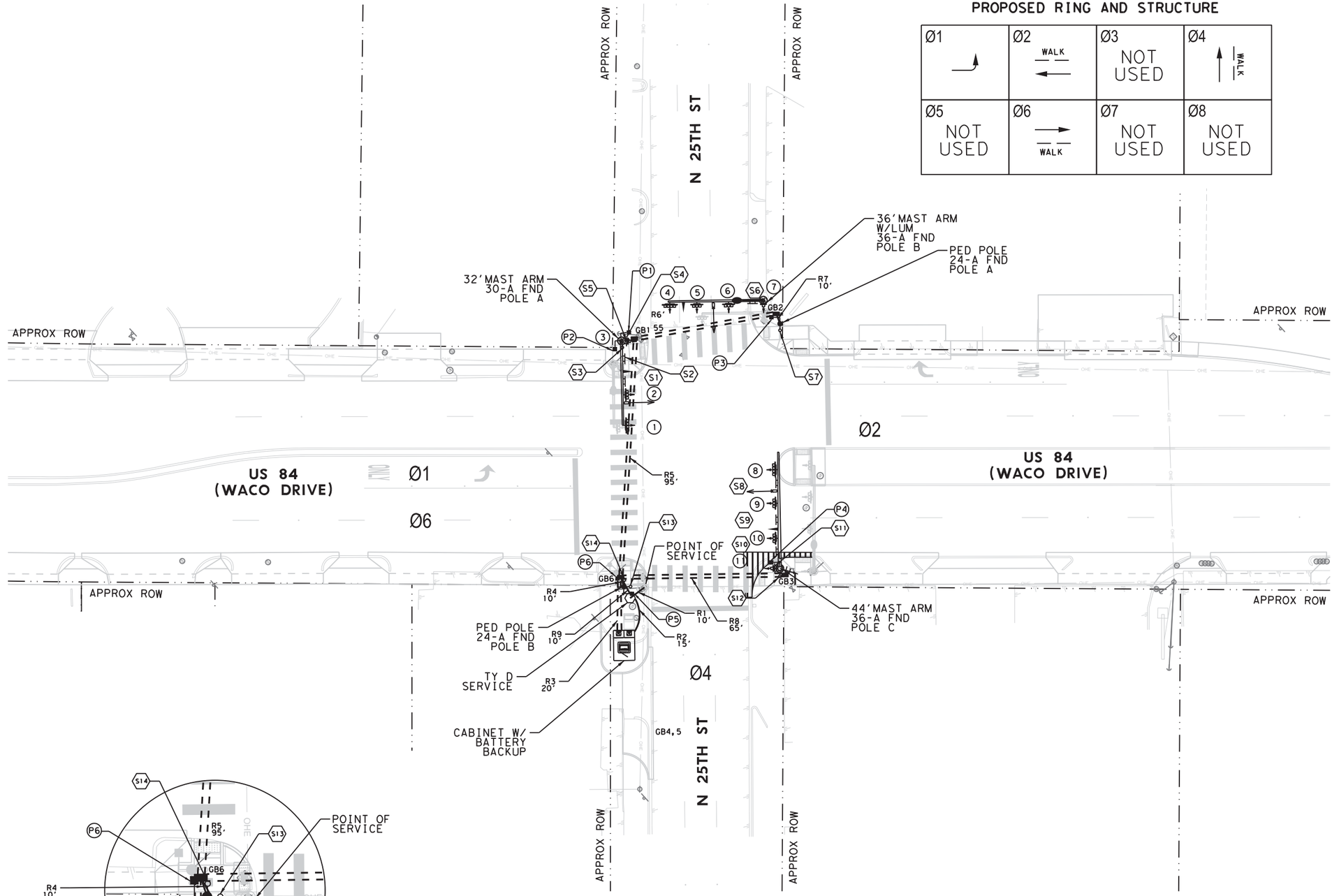

PROPOSED RING AND STRUCTURE

Ø1	Ø2 WALK	Ø3 NOT USED	Ø4 WALK
Ø5 NOT USED	Ø6 WALK	Ø7 NOT USED	Ø8 NOT USED

0' 20' 40'

LEGEND

- EXISTING POINT OF SERVICE
- PROPOSED ELECTRICAL SERVICE
- PROPOSED CONDUIT, PVC
- PROPOSED CONDUIT, BORE
- PROPOSED VIVDS
- PROPOSED GROUND BOX (TY D)
- PROPOSED LED COUNTDOWN & APS
- PROPOSED LUMINAIRE
- PROPOSED SIGNAL POLE ASSEMBLY
- PROPOSED OPTICOM DETECTOR (INSTALL ONLY)
- PROPOSED ITS RADIO ANTENNA
- PROPOSED SIGNAL CABINET

NOTES

1. SHORT RUNS FROM THE GROUND BOXES TO THE SIGNAL / PEDESTRIAN FOUNDATIONS WILL NOT BE PAID DIRECTLY, BUT SUBSIDIARY TO VARIOUS BID ITEMS. FOR THE SIGNAL POLES, THIS WILL BE 2 (3") CONDUITS.
2. INSTALL TRAFFIC SIGNAL CONTROLLER FOUNDATION PER TS-CF DETAIL.
3. ALL ROAD BORES TO BE (2) 3" SCH 80.

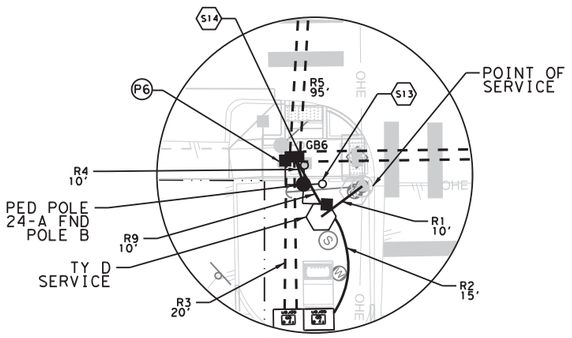

DETAIL A
SW CORNER
US 84 AT N. 25TH STREET
NTS

ELECTRICAL SERVICE DATA												
Electrical Service ID	Plan Sheet Number	Electrical Service Description	Service Conduit Size	Service Conductors No./Size	Safety Switch Amps	Main Ckt. Bkr. Pole/Amps	Two-Pole Contactor Amps	Panelbed/ Loadcenter Amp Rating	Branch Circuit ID	Branch Ckt. Bkr. Pole/Amps	Branch Circuit Amps	KVA Load
ES-11	280	ELEC SRV TY D 120/240 060 (NS)SS(E)PS(U)	2"	3/#6	N/A	2P/30	30	100	Sig. Controller	1P/30	35.5	4.3

STATE OF TEXAS — SCOTT R. ARNOLD — 96782 — LICENSED PROFESSIONAL ENGINEER

Scott R. Arnold, P.E.
12/21/2020

Kimley»Horn F-928

© 2021
Texas Department of Transportation

PROPOSED TRAFFIC SIGNAL

AT N. 25TH STREET

SHEET 2 OF 5

FED. RD. DIV. NO.	PROJECT ID.	HIGHWAY NO.
6	(SEE TITLE SHEET)	US 84

STATE	DIST.	COUNTY	SHEET NO.
TEXAS	WAC	MCLENNAN	280
CONT.	SECT.	JOB	
0055	15	072	

FILENAME: pw:\\kh-pw.bentley.com:kh-pw-01\Documents\01 Active Projects\TX-FTW-063586010 - US 84 (Waco Drive)\WAC 005515072\4 - Design\Plan Set\8. Traffic\US84_SIG01_N25TH.dgn
PLOTTED: 12/21/2020

SIGNAL WIRING DETAIL

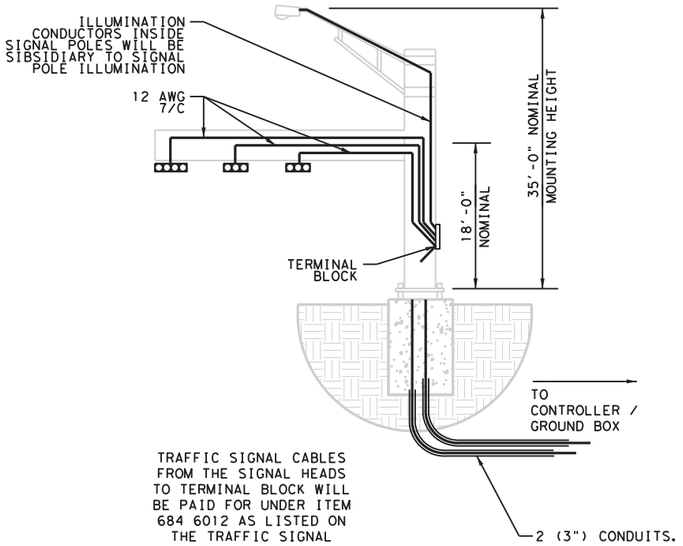

TRAFFIC SIGNAL CABLES FROM THE SIGNAL HEADS TO TERMINAL BLOCK WILL BE PAID FOR UNDER ITEM 684 6012 AS LISTED ON THE TRAFFIC SIGNAL SUMMARY SHEET.

EACH SIGNAL HEAD WILL BE WIRED TO TERMINAL BLOCK.

SIGNAL HEADS

PED SIGNAL HEADS P1, P2, P3, P4, P5, P6

SIGNAL HEAD #8

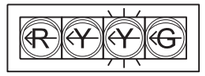

SIGNAL HEADS #1, 2, 5, 6, 9, 10

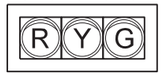

SIGNAL HEADS #3, 7, 11

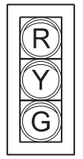

SIGNAL HEAD #4

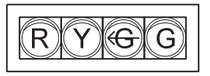

NOTES:

1. TY A SIGNS MOUNTED ON SIGNAL EQUIPMENT IS SHOWN FOR CONTRACTOR INFORMATION ONLY AND SUBSIDIARY TO ITEM 680 6002.

SIGNS

S3, S13 — R10-3E(R)

9" X 15" TY A ALUM (0.94 SQ FT) EACH

S5, S7, S12, S14 — R10-3E(L)

9" X 15" TY A ALUM (0.94 SQ FT) EACH

S9, S11 — R6-2(L)

30" X 36" TY A ALUM (7.5 SQ FT) EACH

S1, S4 — R6-2(R)

30" X 36" TY A ALUM (7.5 SQ FT) EACH

S8 — R10-17T

36" X 42" TY A ALUM (10.5 SQ FT) EACH

S2 — D3-1G

60" X 18" TY A ALUM (7.5 SQ FT) EACH

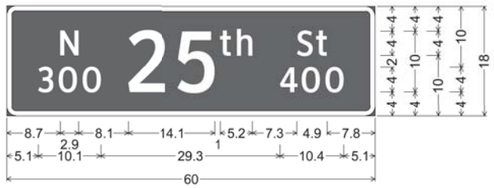

D3-1G;
1.5" Radius, 0.8" Border, White on, Green;
"N", ClearviewHwy-3-W; "300", ClearviewHwy-3-W;
"25", ClearviewHwy-3-W; "th", ClearviewHwy-3-W;
"St", ClearviewHwy-3-W; "400", ClearviewHwy-3-W;

S10 — D3-1G

60" X 18" TY A ALUM (7.5 SQ FT) EACH

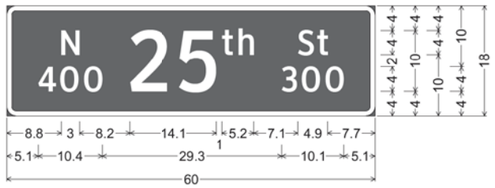

D3-1G;
1.5" Radius, 0.8" Border, White on, Green;
"N", ClearviewHwy-3-W; "400", ClearviewHwy-3-W;
"25", ClearviewHwy-3-W; "th", ClearviewHwy-3-W;
"St", ClearviewHwy-3-W; "300", ClearviewHwy-3-W;

S6 — D3-1G

84" X 18" TY A ALUM (10.5 SQ FT) EACH

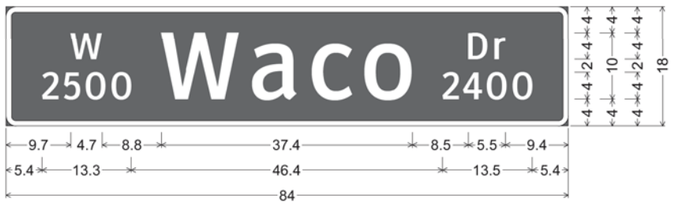

D3-1G;
1.5" Radius, 0.8" Border, White on, Green;
"W", ClearviewHwy-3-W; "2500", ClearviewHwy-3-W; "Waco", ClearviewHwy-3-W;
"Dr", ClearviewHwy-3-W; "2400", ClearviewHwy-3-W;

STATE OF TEXAS — 96782 — LICENSED PROFESSIONAL ENGINEER

Scott R. Arnold, P.E.

12/21/2020

Kimley»Horn F-928

© 2021

Texas Department of Transportation

TRAFFIC SIGNAL SIGNS AND HEADS

AT N. 25TH STREET

SHEET 3 OF 5

FED.RD. DIV.NO.	PROJECT ID.	HIGHWAY NO.
6	(SEE TITLE SHEET)	US 84

STATE	DIST.	COUNTY	SHEET NO.
TEXAS	WAC	MCLENNAN	281
CONT.	SECT.	JOB	
0055	15	072	

FILENAME: pw:\\kh-pw.bentley.com:kh-pw-01\Documents\01 Active Projects\TX-FTW-063586010 - US 84 (Waco Drive)\WAC 0055150724 - Design\Plan Set\8. Traffic\US84_SIGSIGN01_N25TH.dgn
PLOTTED: 12/21/2020

PROJECT	US 84 (0055-15-072)
SHEET	282

			618 6046	618 6029	618 6054	620 6007	620 6008	620 6009	620 6010	684 6007	684 6012	684 6021	684 6049	6306 6007	OPTICOM CABLE	ITS RADIO CABLE
			CONDT (PVC) (SCH 80) (2")	CONDT (PVC) (SCH 40) (3")	CONDT (PVC) (SCH 80) (3") (BORE)	ELEC CONDR (NO.8) BARE	ELEC CONDR (NO.8) INSULATED	ELEC CONDR (NO.6) BARE	ELEC CONDR (NO.6) INSULATED	TRF SIG CBL (TY A)(12 AWG)(2 CONDR)	TRF SIG CBL (TY A)(12 AWG)(7 CONDR)	TRF SIG CBL (TY A)(12 AWG)(16 CONDR)	TRF SIG CBL (TY A)(16 AWG)(3 CONDR)	VIVDS CABLING	FOR CONTRACTOR INFO ONLY	FOR CONTRACTOR INFO ONLY
TRF ID	TABLE	Location	LF	LF	LF	LF	LF	LF	LF	LF	LF	LF	LF	LF	LF	LF
CONDUIT R01*	CONDUIT	TRENCH	10													
CONDUIT R02	CONDUIT	TRENCH	15					10	20							
CONDUIT R03-1	CONDUIT	BORE			20	20				120		60	60	60	60	20
CONDUIT R03-2	CONDUIT	BORE			20	20										
CONDUIT R04	CONDUIT	TRENCH		10		10				20			20			
CONDUIT R05-1	CONDUIT	BORE			95	95	190									
CONDUIT R05-2	CONDUIT	BORE			95	95				285		190	95	190	190	
CONDUIT R06-1	CONDUIT	BORE			55	55										
CONDUIT R06-2	CONDUIT	BORE			55	55	110			55		55	55	55	55	
CONDUIT R07	CONDUIT	TRENCH		10		10				10			10			
CONDUIT R08-1	CONDUIT	BORE			65	65				65		65		65	65	65
CONDUIT R08-2	CONDUIT	BORE			65	65										
CONDUIT R09	CONDUIT	TRENCH		10		10	20									
PED POLE A	CONDUIT	IN PED POLE								5			10			
PED POLE B	CONDUIT	IN PED POLE								10			20			
SIGNAL POLE A	CONDUIT	IN SIGNAL POLE								10	110		20	50	40	
SIGNAL POLE B	CONDUIT	IN SIGNAL POLE									150			45	55	
SIGNAL POLE C	CONDUIT	IN SIGNAL POLE								5	165		10	55	40	30
Grand Total			25	30	470	500	320	10	20	585	425	370	300	520	505	115

*CONDUIT RUN 1 SHALL INCLUDE A SWEEPING 90° PVC AND SHALL STUB UP AT BOTTOM OF ONCOR POLE.

FILENAME: pw:\\kh-pw.bentley.com:kh-pw-01\Documents\01 Active Projects\TX-FTW-063586010 - US 84 (Waco Drive)\WAC 0055150721\4 - Design\Plan Set\8. Traffic\US84_CONSUM01_N25TH.dgn
PLOTTED: 12/21/2020

Scott R. Arnold, P.E.

12/21/2020

Kimley»Horn F-928

© 2021

Texas Department of Transportation

CONDUIT AND CONDUCTOR SUMMARY

AT N. 25TH STREET

SHEET 4 OF 5

FED. RD. DIV. NO.	PROJECT ID.	HIGHWAY NO.
6	(SEE TITLE SHEET)	US 84

STATE	DIST.	COUNTY	SHEET NO.
TEXAS	WAC	MCLENNAN	282
CONT.	SECT.	JOB	
0055	15	072	

PROJECT	US 84 (0055-15-072)
SHEET	283

		624 6010	628 6144	680 6002	680 6004	682 6018	688 6001	688 6003	6058 6001	6062 6038	6306 6001	6306 6002	CABINET	OPTICOM	TY A SIGN
		GROUND BOX TY D (162922)W/APRON	ELC SRV TY D 120/240 060(NS)SS(E)PS(U)	INSTALL HWY TRF SIG (ISOLATED)	REMOVING TRAFFIC SIGNALS	PED SIG SEC (LED)(COUNTDOWN)	PED DETECT PUSH BUTTON (APS)	PED DETECTOR CONTROLLER UNIT	BBU SYSTEM (EXTERNAL BATT CABINET)	ITS RADIO (DUAL)(5 GHZ/5 GHZ)-C-U	VIVDS PROSR SYS	VIVDS CAM ASSY FXD LNS	TxDOT CABINET AND CONTROLLER	FOR CONTRACTOR INFO ONLY	FOR CONTRACTOR INFO ONLY
TRF ID	TABLE	EA	EA	EA	EA	EA	EA	EA	EA	EA	EA	EA	EA	EA	SF
BBU	MISCELLANEOUS								1						
CABINET	MISCELLANEOUS												1		
GROUND BOX	MISCELLANEOUS	6													
ITS RADIO	MISCELLANEOUS									1					
OPTICOM	MISCELLANEOUS													3	
P1	MISCELLANEOUS					1									
P2	MISCELLANEOUS					1									
P3	MISCELLANEOUS					1									
P4	MISCELLANEOUS					1									
P5	MISCELLANEOUS					1									
P6	MISCELLANEOUS					1									
PED	MISCELLANEOUS						6	1							
SERVICE	MISCELLANEOUS		1												
SIGN	MISCELLANEOUS														72
SIGNAL	MISCELLANEOUS			1	1										
VIVDS	MISCELLANEOUS										1	3			
Grand Total		6	1	1	1	6	6	1	1	1	1	3	1	3	72

PROJECT	US 84 (0055-15-072)
SHEET	283

		682 6001	682 6002	682 6003	682 6004	682 6005	682 6006	682 6054	682 6055
		VEH SIG SEC (12")LED(GRN)	VEH SIG SEC (12")LED(GRN ARW)	VEH SIG SEC (12")LED(YEL)	VEH SIG SEC (12")LED(YEL ARW)	VEH SIG SEC (12")LED(RED)	VEH SIG SEC (12")LED(RED ARW)	BACKPLATE W/REF BRDR(3 SEC)(VENT)ALUM	BACKPLATE W/REF BRDR(4 SEC)(VENT)ALUM
TRF ID	TABLE	EA	EA	EA	EA	EA	EA	EA	EA
SIGNAL HEAD 01	SIGNAL HEAD	1		1		1		1	
SIGNAL HEAD 02	SIGNAL HEAD	1		1		1		1	
SIGNAL HEAD 03	SIGNAL HEAD	1		1		1		1	
SIGNAL HEAD 04	SIGNAL HEAD	1	1	1		1			1
SIGNAL HEAD 05	SIGNAL HEAD	1		1		1		1	
SIGNAL HEAD 06	SIGNAL HEAD	1		1		1		1	
SIGNAL HEAD 07	SIGNAL HEAD	1		1		1		1	
SIGNAL HEAD 08	SIGNAL HEAD		1		2		1		1
SIGNAL HEAD 09	SIGNAL HEAD	1		1		1		1	
SIGNAL HEAD 10	SIGNAL HEAD	1		1		1		1	
SIGNAL HEAD 11	SIGNAL HEAD	1		1		1		1	
Grand Total		10	2	10	2	10	1	9	2

PROJECT	US 84 (0055-15-072)
SHEET	283

		686 6033	686 6039	686 6045	687 6001
		INS TRF SIG PL AM(S)1 ARM(32')	INS TRF SIG PL AM(S)1 ARM(36')LUM	INS TRF SIG PL AM(S)1 ARM(44')	PED POLE ASSEMBLY
TRF ID	TABLE	EA	EA	EA	EA
PED POLE A	POLE				1
PED POLE B	POLE				1
TRAFFIC SIGNAL POLE A	POLE	1			
TRAFFIC SIGNAL POLE B	POLE		1		
TRAFFIC SIGNAL POLE C	POLE			1	
Grand Total		1	1	1	2

PROJECT	US 84 (0055-15-072)
SHEET	283

		PED POLE FND	416 6031	416 6032
		FOR CONTRACTOR INFO ONLY	DRILL SHAFT (TRF SIG POLE) (30 IN)	DRILL SHAFT (TRF SIG POLE) (36 IN)
TRF ID	TABLE	LF	LF	LF
PED POLE FND A	FOUNDATIONS	5.7		
PED POLE FND B	FOUNDATIONS	5.7		
SIGNAL POLE FND A	FOUNDATIONS		11.3	
SIGNAL POLE FND B	FOUNDATIONS			13.2
SIGNAL POLE FND C	FOUNDATIONS			13.2
Grand Total		11.4	11.3	26.4

Scott K. Arnold, P.E.

12/21/2020

Kimley»Horn F-928

© 2021

Texas Department of Transportation

TRAFFIC SIGNAL SUMMARY

AT N 25TH STREET

SHEET 5 OF 5

FED.RD. DIV.NO.	PROJECT ID.	HIGHWAY NO.
6	(SEE TITLE SHEET)	US 84

STATE	DIST.	COUNTY	SHEET NO.
TEXAS	WAC	MCLENNAN	283
CONT.	SECT.	JOB	
0055	15	072	

FILENAME: pw:\\kh-pw.bentley.com:kh-pw-01\Documents\01 Active Projects\TX-FTW-063586010 - US 84 (Waco Drive)\WAC 0055150724 - Design\Plan Set\8. Traffic\US84_SIGSUM01_N25TH.dgn
PLOTTED: 12/21/2020

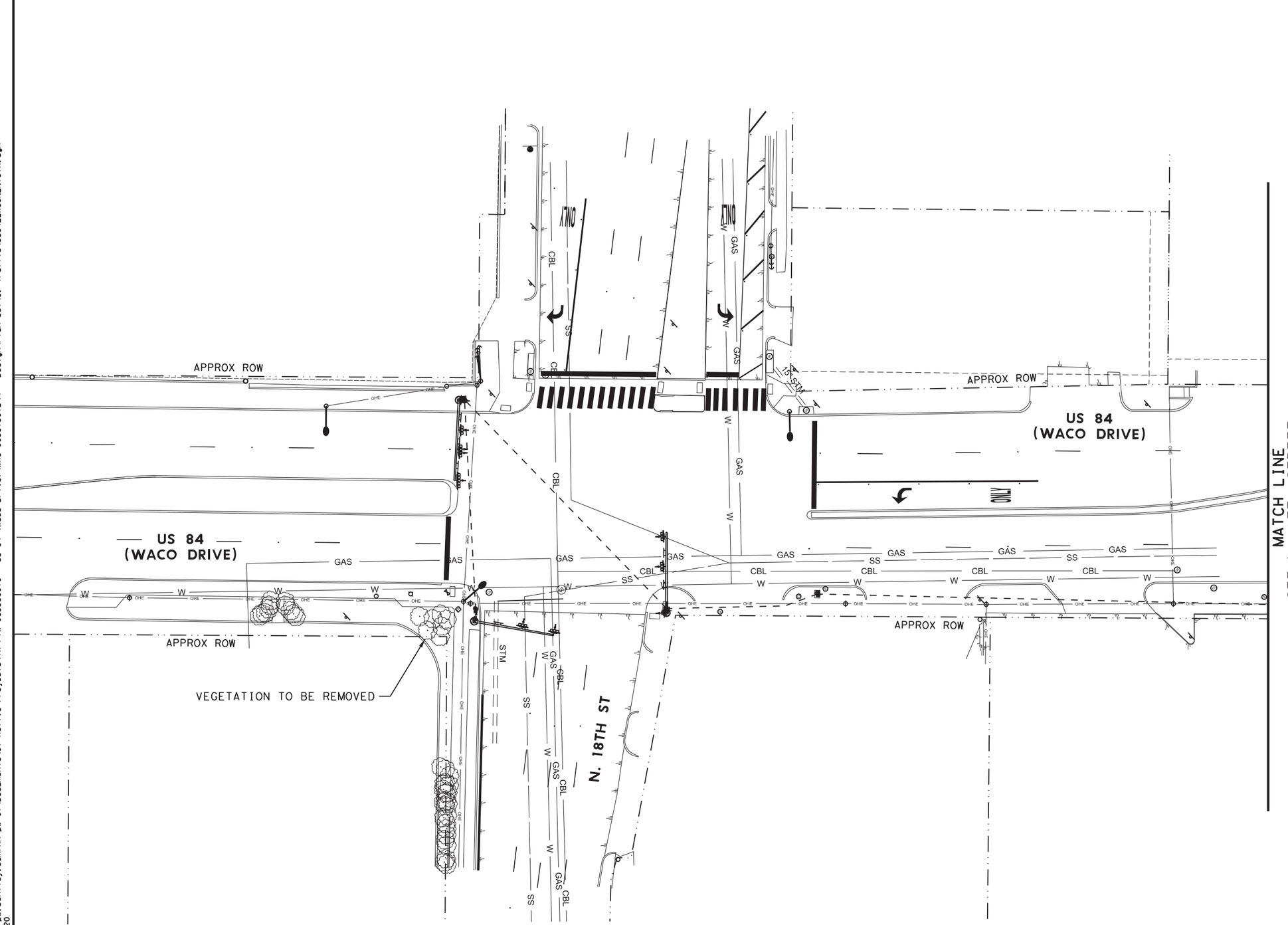

NOTES

1. THE LOCATIONS SHOWN AS EXISTING CONDUIT RUNS ARE APPROXIMATE. THE EXACT LOCATION WILL BE DETERMINED IN THE FIELD. NO EXISTING CONDUIT WILL BE USED, SEE PROPOSED TRAFFIC SIGNAL SHEETS.
2. SEE N. 17TH STREET FOR POINT OF SERVICE, CABINET, AND SERVICE.

STATE OF TEXAS
SCOTT R. ARNOLD
96782
LICENSED
PROFESSIONAL ENGINEER

Scott R. Arnold, P.E.
12/21/2020

Kimley»Horn F-928

© 2021

Texas Department of Transportation

CONDITION DIAGRAM

AT N. 18TH STREET

SHEET 1 OF 5

FED.RD. DIV.NO.	PROJECT ID.	HIGHWAY NO.
6	(SEE TITLE SHEET)	US 84

STATE	DIST.	COUNTY	SHEET NO.
TEXAS	WAC	MCLENNAN	
CONT.	SECT.	JOB	284
0055	15	072	

FILENAME: pw:\\kh-pw.bentley.com:kh-pw-01\Documents\01 Active Projects\TX-FTW-063586010 - US 84 (Waco Drive)\WAC 0055150724 - Design\Plan Set\8. Traffic\US84_EXCON_N18TH.dgn
PLOTTED: 12/21/2020

CONTRACTOR'S INFO ONLY

BORE PIT REMOVAL/REPLACEMENT QUANTITIES
WITHIN TEMPORARY RIGHT OF ENTRY:
*20 SF OF CONRETE SIDEWALK ON SE CORNER
*50 SF LANDSCAPE AND IRRIGATION ON SW CORNER

PROPOSED RING AND STRUCTURE

Ø1 NOT USED	Ø2 WALK	Ø3 NOT USED	Ø4 NOT USED
Ø5	Ø6 WALK	Ø7 NOT USED	Ø8 WALK

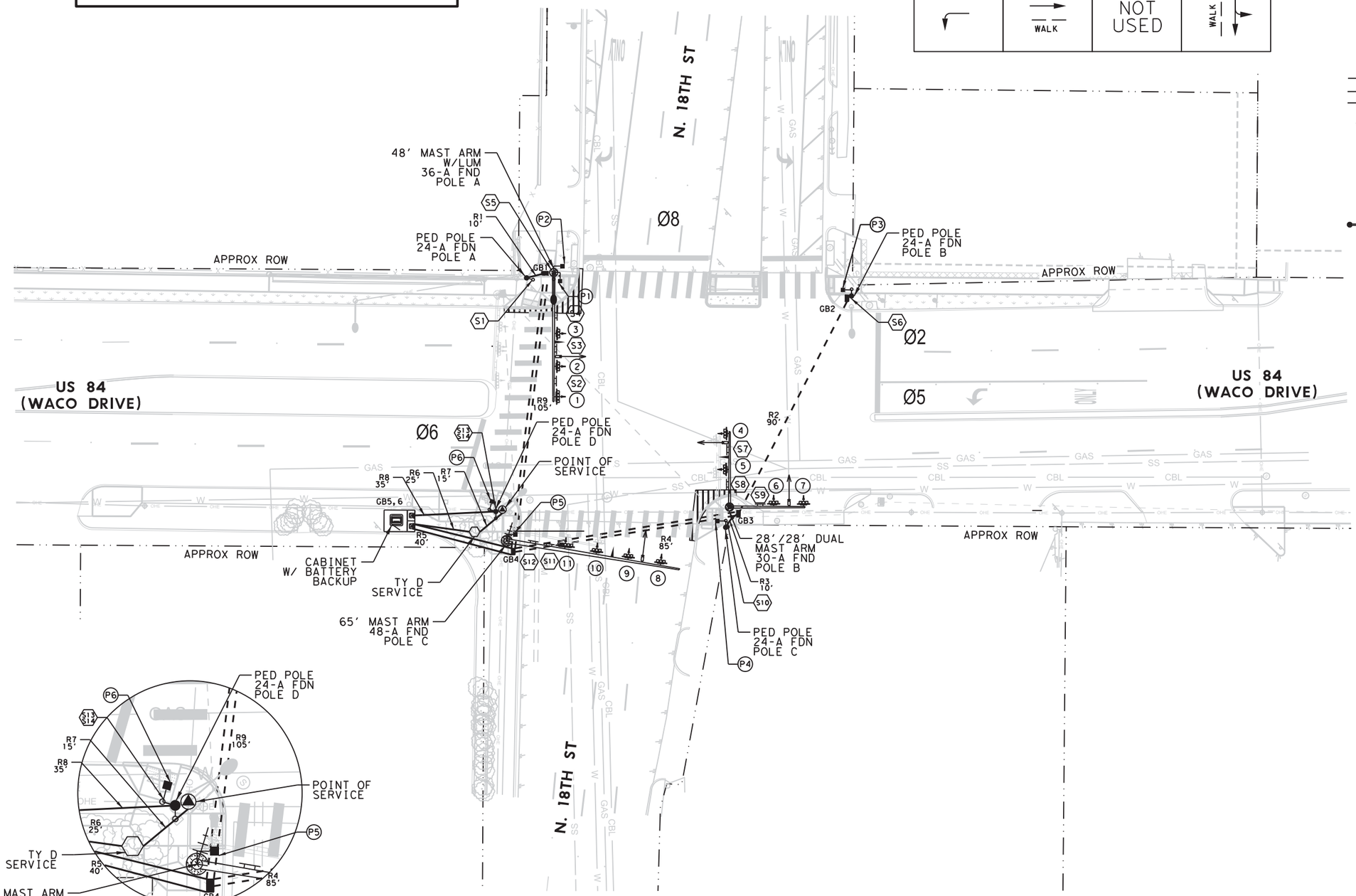

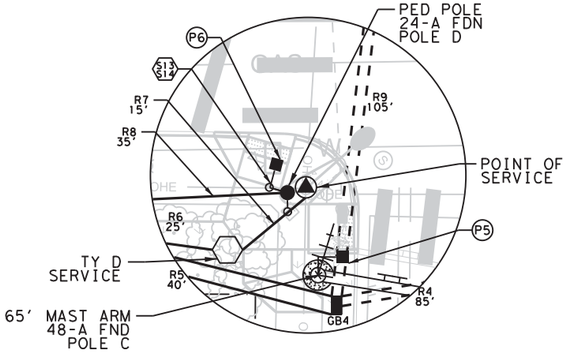

DETAIL A
SW CORNER
US 84 AT N. 18TH STREET
NTS

ELECTRICAL SERVICE DATA

Electrical Service ID	Plan Sheet Number	Electrical Service Description	Service Conduit Size	Service Conductors No./Size	Safety Switch Amps	Main Ckt Bkr. Pole/Amps	Two-Pole Contactor Amps	Panelbed/ Loadcenter Amp Rating	Branch Circuit ID	Branch Ckt. Bkr. Pole/Amps	Branch Circuit Amps	KVA Load
ES-12	285	ELEC SRV TY D 120/240 060 (NS)SS(E)PS(U)	2"	3/#6	N/A	2P/60	30	100	Sig. Controller	1P/30	27.2	3.5
									Luminaires	1P/15	2.3	

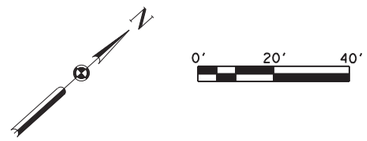

LEGEND

- PROPOSED POINT OF SERVICE
- PROPOSED ELECTRICAL SERVICE
- PROPOSED CONDUIT, PVC
- PROPOSED CONDUIT, BORE
- PROPOSED VIVDS
- PROPOSED GROUND BOX (TY D)
- PROPOSED LED COUNTDOWN & APS
- PROPOSED LUMINAIRE
- PROPOSED SIGNAL POLE ASSEMBLY
- PROPOSED OPTICOM DETECTOR (INSTALL ONLY)
- PROPOSED ITS RADIO ANTENNA
- PROPOSED SIGNAL CABINET

NOTES:

1. SHORT RUNS FROM THE GROUND BOXES TO THE SIGNAL / PEDESTRIAN FOUNDATIONS WILL NOT BE PAID DIRECTLY, BUT SUBSIDIARY TO VARIOUS BID ITEMS. FOR THE SIGNAL POLES, THIS WILL BE 2 (3") CONDUITS.
2. INSTALL TRAFFIC SIGNAL CONTROLLER FOUNDATION PER TS-CF DETAIL.
3. ALL ROAD BORES TO BE (2) 3" SCH 80.

STATE OF TEXAS — SCOTT R. ARNOLD — 96782 — LICENSED — PROFESSIONAL ENGINEER

Scott R. Arnold, P.E.
03/01/2021

Kimley»Horn F-928

© 2021
Texas Department of Transportation

PROPOSED TRAFFIC SIGNAL

AT N. 18TH STREET

SHEET 2 OF 5

FED. RD. DIV. NO.	PROJECT ID.	HIGHWAY NO.
6	(SEE TITLE SHEET)	US 84

STATE	DIST.	COUNTY	SHEET NO.
TEXAS	WAC	MCLENNAN	285
CONT.	SECT.	JOB	
0055	15	072	

FILENAME: pw:\\kh-pw.bentley.com:kh-pw-01\Documents\01 Active Projects\TX-FTW-063586010 - US 84 (Waco Drive)\WAC 0055150724 - Design\Plan Set\8. Traffic\US84_SIG01_N18TH.dgn
PLOTTED: 12/21/2020

SIGNAL WIRING DETAIL

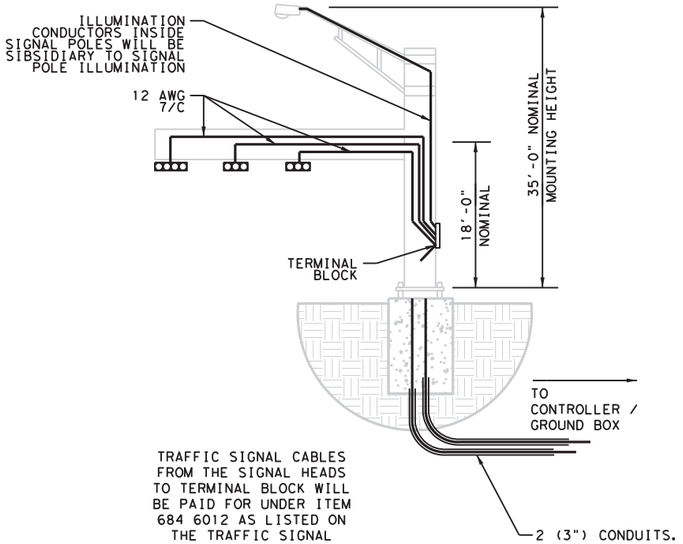

TRAFFIC SIGNAL CABLES FROM THE SIGNAL HEADS TO TERMINAL BLOCK WILL BE PAID FOR UNDER ITEM 684 6012 AS LISTED ON THE TRAFFIC SIGNAL SUMMARY SHEET.

EACH SIGNAL HEAD WILL BE WIRED TO TERMINAL BLOCK.

SIGNAL HEADS

PED SIGNAL HEADS P1, P2, P3, P4, P5, P6

SIGNAL HEAD #1

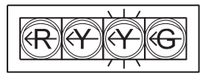

SIGNAL HEAD #2, 3, 4, 5, 8, 9, 10

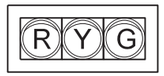

SIGNAL HEADS #6, 7

SIGNAL HEAD #11

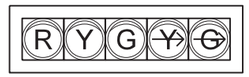

NOTES:

1. TY A SIGNS MOUNTED ON SIGNAL EQUIPMENT IS SHOWN FOR CONTRACTOR INFORMATION ONLY AND SUBSIDIARY TO ITEM 680 6002.

SIGNS

S5 S6 S10 S13

R10-3E(R)

9" X 15" TY A ALUM (0.94 SQ FT) EACH

S1 S14

R10-3E(L)

9" X 15" TY A ALUM (0.94 SQ FT) EACH

S3

R6-2(L)

30" X 36" TY A ALUM (7.5 SQ FT) EACH

S7

R6-2(R)

30" X 36" TY A ALUM (7.5 SQ FT) EACH

S2

R10-17T

36" X 42" TY A ALUM (10.5 SQ FT) EACH

S9

R10-5

30" X 36" TY A ALUM (7.5 SQ FT) EACH

S11

R3-5 R

30" X 36" TY A ALUM (7.5 SQ FT) EACH

S4

D3-1G

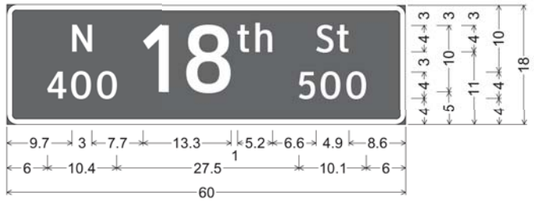

60" X 18" TY A ALUM (7.5 SQ FT) EACH

D3-1G;
1.5" Radius, 0.8" Border, White on, Green;
"N", ClearviewHwy-3-W; "400", ClearviewHwy-3-W;
"18", ClearviewHwy-3-W; "th", ClearviewHwy-3-W;
"St", ClearviewHwy-3-W; "500", ClearviewHwy-3-W;

S8

D3-1G

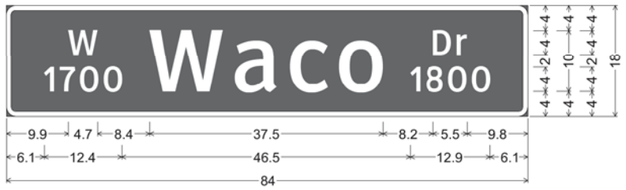

84" X 18" TY A ALUM (10.5 SQ FT) EACH

D3-1G;
1.5" Radius, 0.8" Border, White on, Green;
"W", ClearviewHwy-3-W; "1700", ClearviewHwy-3-W; "Waco", ClearviewHwy-3-W;
"Dr", ClearviewHwy-3-W; "1800", ClearviewHwy-3-W;

S12

D3-1G

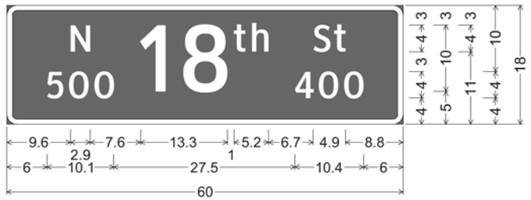

60" X 18" TY A ALUM (7.5 SQ FT) EACH

D3-1G;
1.5" Radius, 0.8" Border, White on, Green;
"N", ClearviewHwy-3-W; "500", ClearviewHwy-3-W;
"18", ClearviewHwy-3-W; "th", ClearviewHwy-3-W;
"St", ClearviewHwy-3-W; "400", ClearviewHwy-3-W;

Scott R. Arnold, P.E.

12/21/2020

Kimley»Horn F-928

© 2021

Texas Department of Transportation

TRAFFIC SIGNAL SIGNS AND HEADS

AT N. 18TH STREET

SHEET 3 OF 5

FED. RD. DIV. NO.	PROJECT ID.		HIGHWAY NO.
6	(SEE TITLE SHEET)		US 84
STATE	DIST.	COUNTY	SHEET NO.
TEXAS	WAC	MCLENNAN	286
CONT.	SECT.	JOB	
0055	15	072	

FILENAME: pw:\\kh-pw.bentley.com:kh-pw-01\Documents\01 Active Projects\TX-FTW-063586010 - US 84 (Waco Drive)\WAC 005515072\4 - Design\Plan Set\8. Traffic\US84_SIGSIGN01_N18TH.dgn
PLOTTED: 12/21/2020

PROJECT	US 84 (0055-15-072)
SHEET	287

			618 6046	618 6029	618 6054	620 6007	620 6008	620 6009	620 6010	684 6007	684 6012	684 6021	684 6049	6306 6007	OPTICOM CABLE	ITS RADIO CABLE
			CONDT (PVC) (SCH 80) (2")	CONDT (PVC) (SCH 40) (3")	CONDT (PVC) (SCH 80) (3") (BORE)	ELEC CONDR (NO.8) BARE	ELEC CONDR (NO.8) INSULATED	ELEC CONDR (NO.6) BARE	ELEC CONDR (NO.6) INSULATED	TRF SIG CBL (TY A)(12 AWG)(2 CONDR)	TRF SIG CBL (TY A)(12 AWG)(7 CONDR)	TRF SIG CBL (TY A)(12 AWG)(16 CONDR)	TRF SIG CBL (TY A)(16 AWG)(3 CONDR)	VIVDS CABLING	FOR CONTRACTOR INFO ONLY	FOR CONTRACTOR INFO ONLY
TRF ID	TABLE	Location	LF	LF	LF	LF	LF	LF	LF	LF	LF	LF	LF	LF	LF	LF
CONDUIT R01	CONDUIT	TRENCH		10		10				10						
CONDUIT R02	CONDUIT	BORE			90	90				90			90			
CONDUIT R03	CONDUIT	TRENCH		10		10				10			10			
CONDUIT R04-1	CONDUIT	BORE			85	85				170		85	170	170	85	
CONDUIT R04-2	CONDUIT	BORE			85	85										
CONDUIT R05-1	CONDUIT	TRENCH		40		40	80			160		120	40	160	120	40
CONDUIT R05-2	CONDUIT	TRENCH		40		40										
CONDUIT R06	CONDUIT	TRENCH		25			50	25	50							
CONDUIT R07*	CONDUIT	TRENCH	15													
CONDUIT R08	CONDUIT	TRENCH		35		35				70			35			
CONDUIT R09-1	CONDUIT	BORE			105	105	210			210		105		105	105	
CONDUIT R09-2	CONDUIT	BORE			105	105										
PED POLE A	CONDUIT	IN PED POLE								5						
PED POLE B	CONDUIT	IN PED POLE								5			10			
PED POLE C	CONDUIT	IN PED POLE								5			10			
PED POLE D	CONDUIT	IN PED POLE								10			10			
SIGNAL POLE A	CONDUIT	IN SIGNAL POLE								5	175		20	55	50	30
SIGNAL POLE B	CONDUIT	IN SIGNAL POLE									175			95	45	
SIGNAL POLE C	CONDUIT	IN SIGNAL POLE									265		10	80	70	
Grand Total			15	160	470	605	340	25	50	750	615	310	405	665	475	70

*CONDUIT RUN 7 SHALL INCLUDE A SWEEPING 90° PVC AND SHALL STUB UP AT BOTTOM OF ONCOR POLE.

Scott R. Arnold, P.E.

12/21/2020

Kimley»Horn F-928

© 2021

Texas Department of Transportation

CONDUIT AND CONDUCTOR SUMMARY

AT N. 18TH STREET

SHEET 4 OF 5

FED.RD. DIV.NO.	PROJECT ID.	HIGHWAY NO.
6	(SEE TITLE SHEET)	US 84

STATE	DIST.	COUNTY	SHEET NO.
TEXAS	WAC	MCLENNAN	287
CONT.	SECT.	JOB	
0055	15	072	

FILENAME: pw:\\kh-pw.bentley.com:kh-pw-01\Documents\01 Active Projects\TX-FTW-063586010 - US 84 (Waco Drive)\WAC 005515072\4 - Design\Plan Set\8. Traffic\US84_CONSUM01_N18TH.dgn
PLOTTED: 12/21/2020

PROJECT	US 84 (0055-15-072)														
SHEET	288														
		624 6010	628 6144	680 6002	680 6004	682 6018	688 6001	688 6003	752 6015	6058 6001	6062 6038	6306 6001	6306 6002	CABINET	OPTICOM	TY A SIGN
		GROUND BOX TY D (162922)W/APRON	ELC SRV TY D 120/240 060(NS)SS(E)PS(U)	INSTALL HWY TRF SIG (ISOLATED)	REMOVING TRAFFIC SIGNALS	PED SIG SEC (LED)(COUNTDOWN)	PED DETECT PUSH BUTTON (APS)	PED DETECTOR CONTROLLER UNIT	TREE AND BRUSH REMOVAL	BBU SYSTEM (EXTERNAL BATT CABINET)	ITS RADIO (DUAL)(5 GHZ/5 GHZ)-C-U	VIVDS PROSR SYS	VIVDS CAM ASSY FXD LNS	TxDOT CABINET AND CONTROLLER	FOR CONTRACTOR INFO ONLY	FOR CONTRACTOR INFO ONLY
TRF ID	TABLE	EA	EA	EA	EA	EA	EA	EA	AC	EA	EA	EA	EA	EA	EA	SF
BBU	MISCELLANEOUS									1						
CABINET	MISCELLANEOUS													1		
GROUND BOX	MISCELLANEOUS	6														
ITS RADIO	MISCELLANEOUS										1					
OPTICOM	MISCELLANEOUS														3	
P1	MISCELLANEOUS					1										
P2	MISCELLANEOUS					1										
P3	MISCELLANEOUS					1										
P4	MISCELLANEOUS					1										
P5	MISCELLANEOUS					1										
P6	MISCELLANEOUS					1										
PED	MISCELLANEOUS						6	1								
SERVICE	MISCELLANEOUS		1													
SIGN	MISCELLANEOUS															72
SIGNAL	MISCELLANEOUS			1	1											
VIVDS	MISCELLANEOUS											1	4			
TREE & BRUSH	MISCELLANEOUS								0.006							
Grand Total		6	1	1	1	6	6	1	0.006	1	1	1	4	1	3	72

PROJECT	US 84 (0055-15-072)									
SHEET	288									
		682 6001	682 6002	682 6003	682 6004	682 6005	682 6006	682 6054	682 6055	682 6056
		VEH SIG SEC (12")LED(GRN)	VEH SIG SEC (12")LED(GRN ARW)	VEH SIG SEC (12")LED(YEL)	VEH SIG SEC (12")LED(YEL ARW)	VEH SIG SEC (12")LED(RED)	VEH SIG SEC (12")LED(RED ARW)	BACKPLATE W/REF BRDR(3 SEC)(VENT)ALUM	BACKPLATE W/REF BRDR(4 SEC)(VENT)ALUM	BACKPLATE W/REF BRDR(5 SEC)(VENT)ALUM
TRF ID	TABLE	EA	EA	EA	EA	EA	EA	EA	EA	EA
SIGNAL HEAD 01	SIGNAL HEAD		1		2		1		1	
SIGNAL HEAD 02	SIGNAL HEAD	1		1		1		1		
SIGNAL HEAD 03	SIGNAL HEAD	1		1		1		1		
SIGNAL HEAD 04	SIGNAL HEAD	1		1		1		1		
SIGNAL HEAD 05	SIGNAL HEAD	1		1		1		1		
SIGNAL HEAD 06	SIGNAL HEAD		1		1		1	1		
SIGNAL HEAD 07	SIGNAL HEAD		1		1		1	1		
SIGNAL HEAD 08	SIGNAL HEAD	1		1		1		1		
SIGNAL HEAD 09	SIGNAL HEAD	1		1		1		1		
SIGNAL HEAD 10	SIGNAL HEAD	1		1		1		1		
SIGNAL HEAD 11	SIGNAL HEAD	1	1	1	1	1				1
Grand Total		8	4	8	5	8	3	9	1	1

PROJECT	US 84 (0055-15-072)				
SHEET	288				
		686 6051	686 6065	686 6089	687 6001	687 6002
		INS TRF SIG PL AM(S)1 ARM(48')LUM	INS TRF SIG PL AM(S)1 ARM(65')	INS TRF SIG PL AM(S)2 ARM(28-28')	PED POLE ASSEMBLY	PEDESTRIAN PUSH BUTTON POLE
TRF ID	TABLE	EA	EA	EA	EA	EA
PED POLE A	POLE					1
PED POLE B	POLE				1	
PED POLE C	POLE				1	
PED POLE D	POLE				1	
TRAFFIC SIGNAL POLE A	POLE	1				
TRAFFIC SIGNAL POLE B	POLE			1		
TRAFFIC SIGNAL POLE C	POLE		1			
Grand Total		1	1	1	3	1

PROJECT	US 84 (0055-15-072)				
SHEET	288				
		PED POLE FND	416 6031	416 6032	416 6034
		FOR CONTRACTOR INFO ONLY	DRILL SHAFT (TRF SIG POLE) (30 IN)	DRILL SHAFT (TRF SIG POLE) (36 IN)	DRILL SHAFT (TRF SIG POLE) (48 IN)
TRF ID	TABLE	LF	LF	LF	LF
PED POLE FND A	FOUNDATIONS	5.7			
PED POLE FND B	FOUNDATIONS	5.7			
PED POLE FND C	FOUNDATIONS	5.7			
PED POLE FND D	FOUNDATIONS	5.7			
SIGNAL POLE FND A	FOUNDATIONS			13.2	
SIGNAL POLE FND B	FOUNDATIONS		11.3		
SIGNAL POLE FND C	FOUNDATIONS				21.9
Grand Total		22.8	11.3	13.2	21.9

STATE OF TEXAS
SCOTT R. ARNOLD
96782
LICENSED
PROFESSIONAL ENGINEER

Scott R. Arnold, P.E.
12/21/2020

Kimley»Horn F-928

© 2021

Texas Department of Transportation

TRAFFIC SIGNAL SUMMARY

AT N. 18TH STREET

SHEET 5 OF 5

FED.RD. DIV.NO.	PROJECT ID.	HIGHWAY NO.
6	(SEE TITLE SHEET)	US 84

STATE	DIST.	COUNTY	SHEET NO.
TEXAS	WAC	MCLENNAN	288
CONT.	SECT.	JOB	
0055	15	072	

FILENAME: pw:\\kh-pw.bentley.com:kh-pw-01\Documents\01 Active Projects\TX-FTW-063586010 - US 84 (Waco Drive)\WAC 005515072\4 - Design\Plan Set\8. Traffic\US84_SIGSUM01_N18TH.dgn
PLOTTED: 12/21/2020

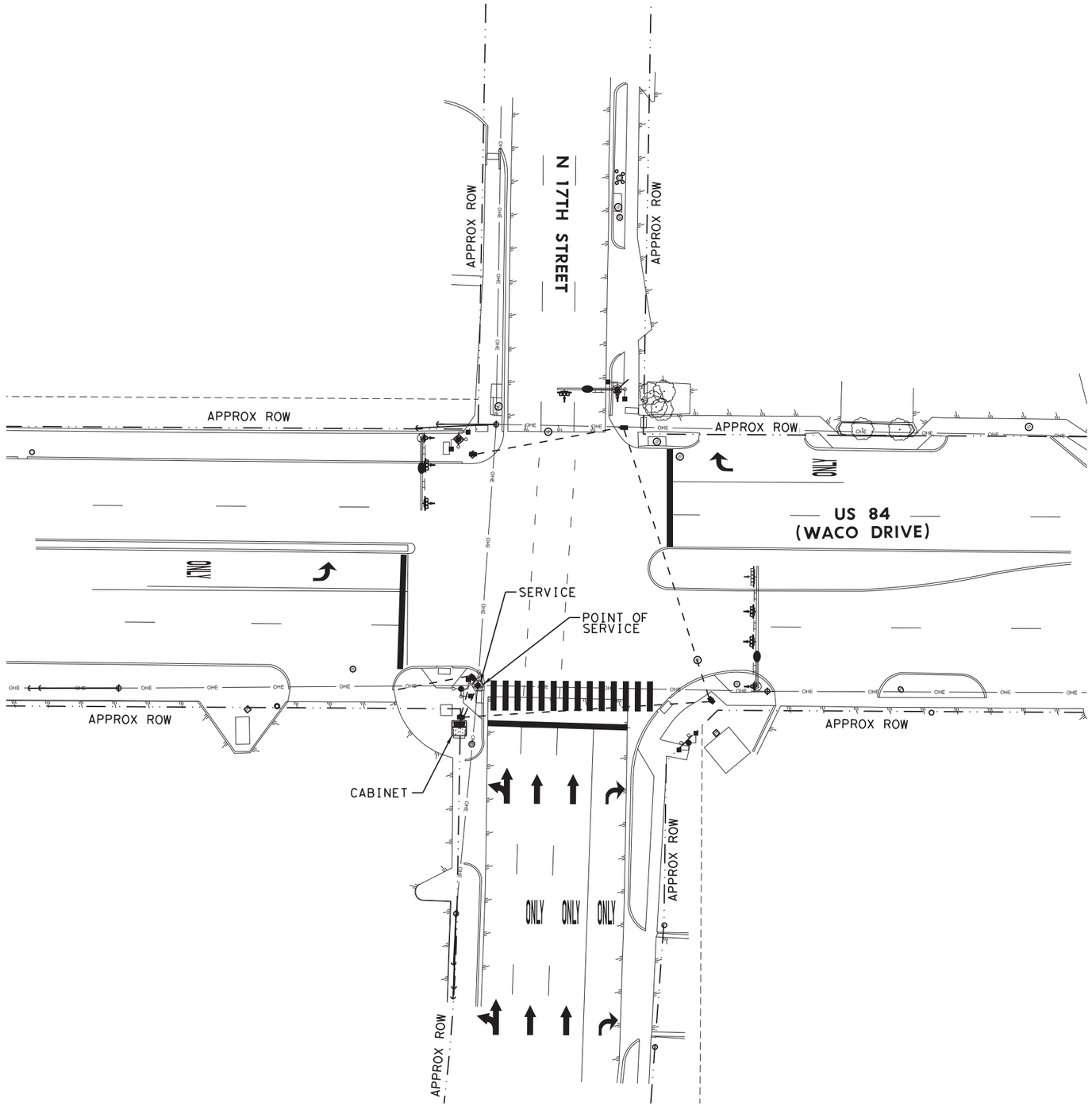

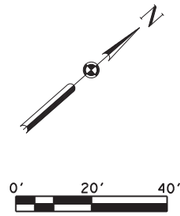

LEGEND

- POINT OF SERVICE
- ELECTRICAL SERVICE
- CONDUIT, PVC
- GROUND BOX

NOTES:

1. THE LOCATIONS SHOWN AS EXISTING CONDUIT ARE APPROXIMATE. THE EXACT LOCATION WILL BE DETERMINED IN THE FIELD. NO EXISTING CONDUIT WILL BE USED. SEE PROPOSED TRAFFIC SIGNAL SHEETS.

Scott R. Arnold, P.E.

12/21/2020

Kimley»Horn F-928

© 2021

Texas Department of Transportation

CONDITION DIAGRAM

AT N. 17TH STREET

SHEET 1 OF 5

FED.RD. DIV.NO.	PROJECT ID.	HIGHWAY NO.
6	(SEE TITLE SHEET)	US 84

STATE	DIST.	COUNTY	SHEET NO.
TEXAS	WAC	MCLENNAN	289
CONT.	SECT.	JOB	
0055	15	072	

FILENAME: pw:\\kh-pw.bentley.com:kh-pw-01\Documents\01 Active Projects\TX-FTW-063586010 - US 84 (Waco Drive)\WAC 005515072\4 - Design\Plan Set\8. Traffic\US84_EXCON_N17TH.dgn
PLOTTED: 12/21/2020

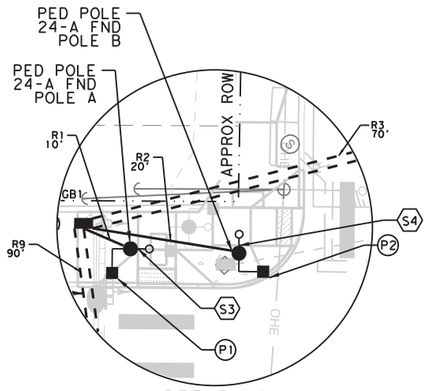

DETAIL A
NW CORNER
US 84 AT N. 17TH STREET
NTS

PROPOSED RING AND STRUCTURE

Ø1	Ø2 WALK	Ø3 NOT USED	Ø4 WALK
Ø5 NOT USED	Ø6 WALK	Ø7 NOT USED	Ø8 NOT USED

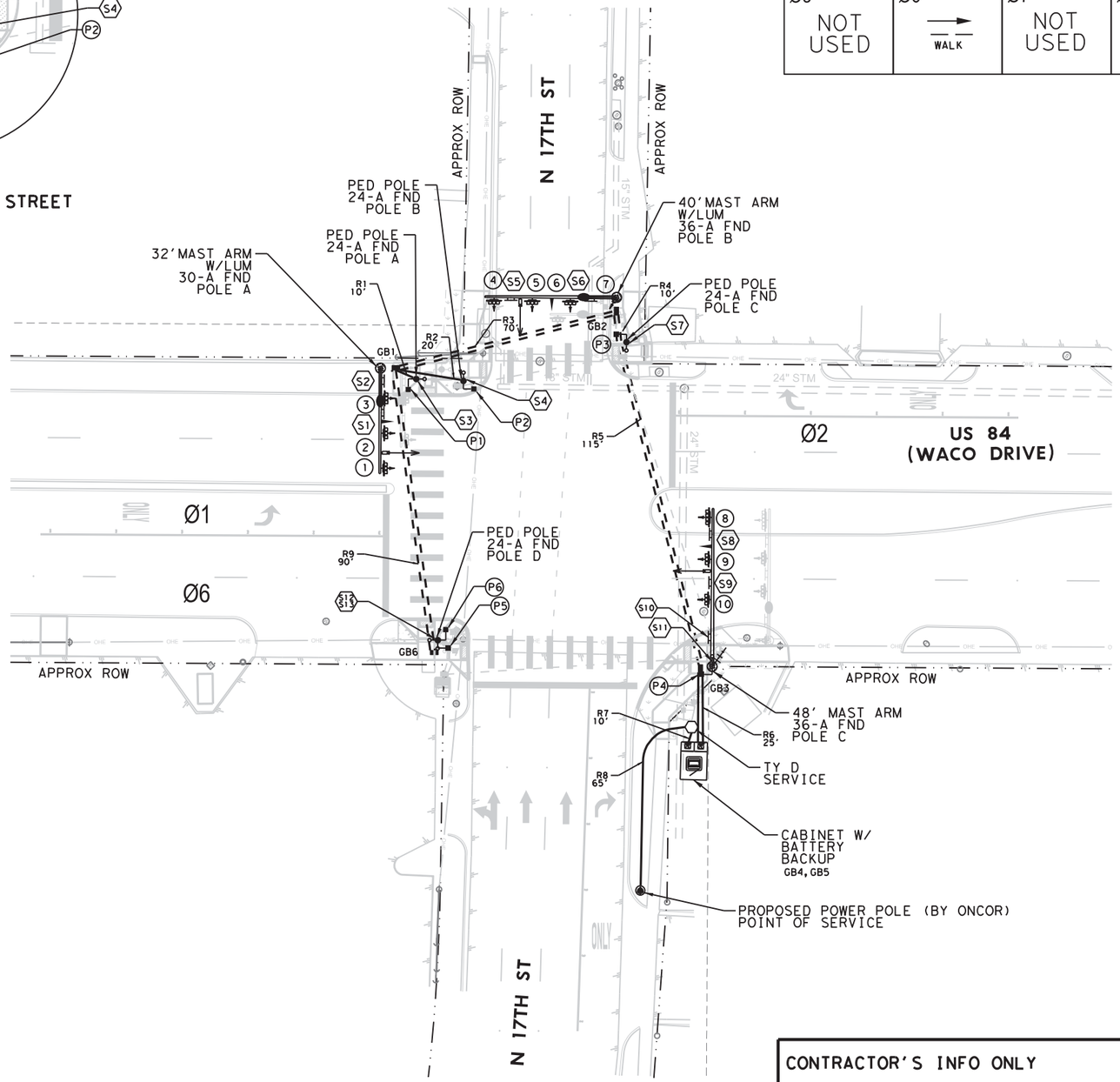

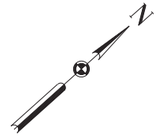

LEGEND

- EXISTING POINT OF SERVICE
- PROPOSED ELECTRICAL SERVICE
- PROPOSED CONDUIT, PVC
- PROPOSED CONDUIT, BORE
- PROPOSED VIVDS
- PROPOSED GROUND BOX (TY D)
- PROPOSED LED COUNTDOWN & APS
- PROPOSED LUMINAIRE
- PROPOSED SIGNAL POLE ASSEMBLY
- PROPOSED OPTICOM DETECTOR (INSTALL ONLY)
- PROPOSED ITS RADIO ANTENNA
- PROPOSED SIGNAL CABINET

NOTES:

1. SHORT RUNS FROM THE GROUND BOXES TO THE SIGNAL / PEDESTRIAN POLES AND SIGNAL CABINET FOUNDATIONS WILL NOT BE PAID DIRECTLY, BUT SUBSIDIARY TO VARIOUS BID ITEMS. FOR THE SIGNAL POLES, THIS WILL BE 2 (3") CONDUITS.
2. INSTALL TRAFFIC SIGNAL CONTROLLER FOUNDATION PER TS-CF DETAIL.
3. ALL ROAD BORES TO BE (2) 3" SCH 80.

ELECTRICAL SERVICE DATA

Electrical Service ID	Plan Sheet Number	Electrical Service Description	Service Conduit Size	Service Conductors No./Size	Safety Switch Amps	Main Ckt. Bkr. Pole/Amps	Two-Pole Contactor Amps	Panelbed/ Loadcenter Amp Rating	Branch Circuit ID	Branch Ckt. Bkr. Pole/Amps	Branch Circuit Amps	KVA Load
ES-13	290	ELEC SRV TY D 120/240 060 (NS)SS(E)PS(U)	2"	3/#6	N/A	2P/60	30	100	Sig. Controller	1P/30	28.6	4.3
									Luminaires	2P/15	6.9	

CONTRACTOR'S INFO ONLY

BORE PIT REMOVAL/REPLACEMENT QUANTITIES WITHIN TEMPORARY RIGHT OF ENTRY:
- *50 SF OF BLOCK SODDING ON SE CORNER
- *50 SF OF BLOCK SODDING ON NW CORNER

STATE OF TEXAS — SCOTT R. ARNOLD — 96782 — LICENSED — PROFESSIONAL ENGINEER

Scott R Arnold, P.E.

03/01/2021

Kimley»Horn F-928

© 2021

Texas Department of Transportation

PROPOSED TRAFFIC SIGNAL

AT N. 17TH STREET

SHEET 2 OF 5

FED. RD. DIV. NO.	PROJECT ID.	HIGHWAY NO.
6	(SEE TITLE SHEET)	US 84

STATE	DIST.	COUNTY	SHEET NO.
TEXAS	WAC	MCLENNAN	290
CONT.	SECT.	JOB	
0055	15	072	

FILENAME: pw:\\kh-pw.bentley.com:kh-pw-01\Documents\01 Active Projects\TX-FTW-063586010 - US 84 (Waco Drive)\WAC 0055150724 - Design\Plan Set\8. Traffic\US84_SIG01_N17TH.dgn
PLOTTED: 12/21/2020

SIGNAL WIRING DETAIL

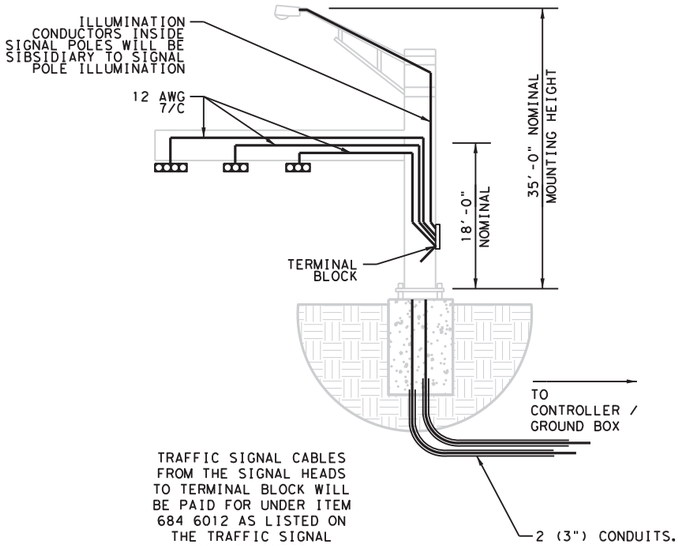

TRAFFIC SIGNAL CABLES FROM THE SIGNAL HEADS TO TERMINAL BLOCK WILL BE PAID FOR UNDER ITEM 684 6012 AS LISTED ON THE TRAFFIC SIGNAL SUMMARY SHEET.

EACH SIGNAL HEAD WILL BE WIRED TO TERMINAL BLOCK.

SIGNAL HEADS

PED SIGNAL HEADS P1, P2, P3, P4, P5, P6

SIGNAL HEADS #1, 2, 3, 4, 5, 6, 9, 10

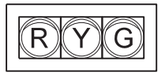

SIGNAL HEAD #8

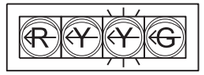

SIGNAL HEAD #7

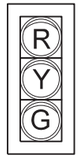

NOTES:

1. TY A SIGNS MOUNTED ON SIGNAL EQUIPMENT IS SHOWN FOR CONTRACTOR INFORMATION ONLY AND SUBSIDIARY TO ITEM 680 6002.

SIGNS

S11 — R10-3E(R)

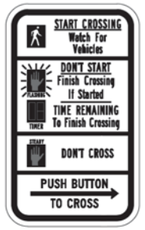

9" X 15" TY A ALUM (0.94 SQ FT) EACH

S3 S4 S7 / S12 S13 — R10-3E(L)

9" X 15" TY A ALUM (0.94 SQ FT) EACH

S9 — R6-2(L)

30" X 36" TY A ALUM (7.5 SQ FT) EACH

S1 — R6-2(R)

30" X 36" TY A ALUM (7.5 SQ FT) EACH

S8 — R10-17T

36" X 42" TY A ALUM (10.5 SQ FT) EACH

S5 — R3-8 MS

30" X 30" TY A ALUM (6.25 SQ FT) EACH

S2 — D3-1G

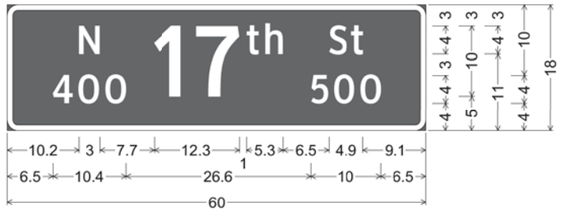

60" X 18" TY A ALUM (7.5 SQ FT) EACH

D3-1G;
1.5" Radius, 0.8" Border, White on, Green;
"N", ClearviewHwy-3-W; "400", ClearviewHwy-3-W;
"17", ClearviewHwy-3-W; "th", ClearviewHwy-3-W;
"St", ClearviewHwy-3-W; "500", ClearviewHwy-3-W;

S10 — D3-1G

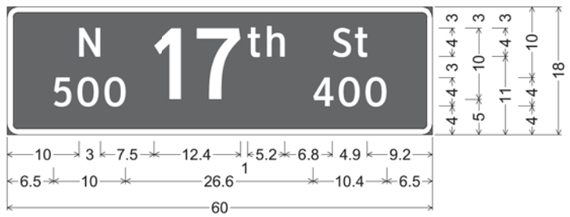

60" X 18" TY A ALUM (7.5 SQ FT) EACH

D3-1G;
1.5" Radius, 0.8" Border, White on, Green;
"N", ClearviewHwy-3-W; "500", ClearviewHwy-3-W;
"17", ClearviewHwy-3-W; "th", ClearviewHwy-3-W;
"St", ClearviewHwy-3-W; "400", ClearviewHwy-3-W;

S6 — D3-1G

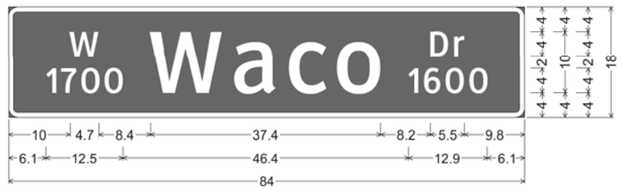

84" X 18" TY A ALUM (10.5 SQ FT) EACH

D3-1G;
1.5" Radius, 0.8" Border, White on, Green;
"W", ClearviewHwy-3-W; "1700", ClearviewHwy-3-W; "Waco", ClearviewHwy-3-W;
"Dr", ClearviewHwy-3-W; "1600", ClearviewHwy-3-W;

Scott R. Arnold, P.E.

12/21/2020

Kimley»Horn F-928

© 2021

Texas Department of Transportation

TRAFFIC SIGNAL SIGNS AND HEADS

AT N. 17TH STREET

SHEET 3 OF 5

FED.RD. DIV.NO.	PROJECT ID.	HIGHWAY NO.
6	(SEE TITLE SHEET)	US 84

STATE	DIST.	COUNTY	SHEET NO.
TEXAS	WAC	MCLENNAN	291
CONT.	SECT.	JOB	
0055	15	072	

FILENAME: pw:\\kh-pw.bentley.com:kh-pw-01\Documents\01 Active Projects\TX-FTW-063586010 - US 84 (Waco Drive)\WAC 005515072\4 - Design\Plan Set\8. Traffic\US84_SIGSIGN01_N17TH.dgn
PLOTTED: 12/21/2020

PROJECT	US 84 (0055-15-072)
SHEET	292

			618 6046	618 6029	618 6054	620 6007	620 6008	620 6009	620 6010	684 6007	684 6012	684 6021	684 6049	6306 6007	OPTICOM CABLE	ITS RADIO CABLE
			CONDT (PVC) (SCH 80) (2")	CONDT (PVC) (SCH 40) (3")	CONDT (PVC) (SCH 80) (3") (BORE)	ELEC CONDR (NO.8) BARE	ELEC CONDR (NO.8) INSULATED	ELEC CONDR (NO.6) BARE	ELEC CONDR (NO.6) INSULATED	TRF SIG CBL (TY A)(12 AWG)(2 CONDR)	TRF SIG CBL (TY A)(12 AWG)(7 CONDR)	TRF SIG CBL (TY A)(12 AWG)(16 CONDR)	TRF SIG CBL (TY A)(16 AWG)(3 CONDR)	VIVDS CABLING	FOR CONTRACTOR INFO ONLY	FOR CONTRACTOR INFO ONLY
TRF ID	TABLE	Location	LF	LF	LF	LF	LF	LF	LF	LF	LF	LF	LF	LF	LF	LF
CONDUIT R01	CONDUIT	TRENCH		10		10				10			10			
CONDUIT R02	CONDUIT	TRENCH		20		20				20			20			
CONDUIT R03-1	CONDUIT	BORE			70	70	140			280		70	280	70	70	
CONDUIT R03-2	CONDUIT	BORE			70	70										
CONDUIT R04	CONDUIT	TRENCH		10		10				10			10			
CONDUIT R05-1	CONDUIT	BORE			115	115	230			575		230	575	230	230	
CONDUIT R05-2	CONDUIT	BORE			115	115										
CONDUIT R06-1	CONDUIT	TRENCH		25		25	50			150		100	125	100	100	25
CONDUIT R06-2	CONDUIT	TRENCH		25		25										
CONDUIT R07	CONDUIT	TRENCH		10			20	10	20							
CONDUIT R08*	CONDUIT	TRENCH	65													
CONDUIT R09-1	CONDUIT	BORE			90	90				180			180			
CONDUIT R09-2	CONDUIT	BORE			90	90										
PED POLE A	CONDUIT	IN PED POLE								5			10			
PED POLE B	CONDUIT	IN PED POLE								5			10			
PED POLE C	CONDUIT	IN PED POLE								5			10			
PED POLE D	CONDUIT	IN PED POLE								10			20			
SIGNAL POLE A	CONDUIT	IN SIGNAL POLE									120			45	35	
SIGNAL POLE B	CONDUIT	IN SIGNAL POLE									150			50	40	
SIGNAL POLE C	CONDUIT	IN SIGNAL POLE								5	160		10	50	60	30
Grand Total			65	100	550	640	440	10	20	1255	430	400	1260	545	535	55

*CONDUIT RUN 8 SHALL INCLUDE A SWEEPING 90° PVC AND SHALL STUB UP AT BOTTOM OF ONCOR POLE.

Scott R. Arnold, P.E.

12/21/2020

Kimley»Horn F-928

© 2021

Texas Department of Transportation

CONDUIT AND CONDUCTOR SUMMARY

AT N. 17TH STREET

SHEET 4 OF 5

FED.RD. DIV.NO.	PROJECT ID.	HIGHWAY NO.
6	(SEE TITLE SHEET)	US 84

STATE	DIST.	COUNTY	SHEET NO.
TEXAS	WAC	MCLENNAN	292
CONT.	SECT.	JOB	
0055	15	072	

FILENAME: pw:\\kh-pw.bentley.com:kh-pw-01\Documents\01 Active Projects\TX-FTW-063586010 - US 84 (Waco Drive)\WAC 005515072\4 - Design\Plan Set\8. Traffic\US84_CONSUM01_N17TH.dgn
PLOTTED: 12/21/2020

PROJECT	US 84 (0055-15-072)													
SHEET	293													
		624 6010	628 6144	680 6002	680 6004	682 6018	688 6001	688 6003	6058 6001	6062 6038	6306 6001	6306 6002	CABINET	OPTICOM	TY A SIGN
		GROUND BOX TY D (162922)W/APRON	ELC SRV TY D 120/240 060(NS)SS(E)PS(U)	INSTALL HWY TRF SIG (ISOLATED)	REMOVING TRAFFIC SIGNALS	PED SIG SEC (LED)(COUNTDOWN)	PED DETECT PUSH BUTTON (APS)	PED DETECTOR CONTROLLER UNIT	BBU SYSTEM (EXTERNAL BATT CABINET)	ITS RADIO (DUAL)(5 GHZ/5 GHZ)-C-U	VIVDS PROSR SYS	VIVDS CAM ASSY FXD LNS	TxDOT CABINET AND CONTROLLER	FOR CONTRACTOR INFO ONLY	FOR CONTRACTOR INFO ONLY
TRF ID	TABLE	EA	EA	EA	EA	EA	EA	EA	EA	EA	EA	EA	EA	EA	SF
BBU	MISCELLANEOUS								1						
CABINET	MISCELLANEOUS												1		
GROUND BOX	MISCELLANEOUS	6													
ITS RADIO	MISCELLANEOUS									1					
OPTICOM	MISCELLANEOUS													3	
P1	MISCELLANEOUS					1									
P2	MISCELLANEOUS					1									
P3	MISCELLANEOUS					1									
P4	MISCELLANEOUS					1									
P5	MISCELLANEOUS					1									
P6	MISCELLANEOUS					1									
PED	MISCELLANEOUS						6	1							
SERVICE	MISCELLANEOUS		1												
SIGN	MISCELLANEOUS														63
SIGNAL	MISCELLANEOUS			1	1										
VIVDS	MISCELLANEOUS										1	3			
Grand Total		6	1	1	1	6	6	1	1	1	1	3	1	3	63

PROJECT	US 84 (0055-15-072)								
SHEET	293								
		682 6001	682 6002	682 6003	682 6004	682 6005	682 6006	682 6054	682 6055
		VEH SIG SEC (12")LED(GRN)	VEH SIG SEC (12")LED(GRN ARW)	VEH SIG SEC (12")LED(YEL)	VEH SIG SEC (12")LED(YEL ARW)	VEH SIG SEC (12")LED(RED)	VEH SIG SEC (12")LED(RED ARW)	BACKPLATE W/REF BRDR(3 SEC)(VENT)ALUM	BACKPLATE W/REF BRDR(4 SEC)(VENT)ALUM
TRF ID	TABLE	EA	EA	EA	EA	EA	EA	EA	EA
SIGNAL HEAD 01	SIGNAL HEAD	1		1		1		1	
SIGNAL HEAD 02	SIGNAL HEAD	1		1		1		1	
SIGNAL HEAD 03	SIGNAL HEAD	1		1		1		1	
SIGNAL HEAD 04	SIGNAL HEAD	1		1		1		1	
SIGNAL HEAD 05	SIGNAL HEAD	1		1		1		1	
SIGNAL HEAD 06	SIGNAL HEAD	1		1		1		1	
SIGNAL HEAD 07	SIGNAL HEAD	1		1		1		1	
SIGNAL HEAD 08	SIGNAL HEAD		1		2		1		1
SIGNAL HEAD 09	SIGNAL HEAD	1		1		1		1	
SIGNAL HEAD 10	SIGNAL HEAD	1		1		1		1	
Grand Total		9	1	9	2	9	1	9	1

PROJECT	US 84 (0055-15-072)			
SHEET	293			
		686 6035	686 6043	686 6049	687 6001
		INS TRF SIG PL AM(S)1 ARM(32')LUM	INS TRF SIG PL AM(S)1 ARM(40')LUM	INS TRF SIG PL AM(S)1 ARM(48')	PED POLE ASSEMBLY
TRF ID	TABLE	EA	EA	EA	EA
PED POLE A	POLE				1
PED POLE B	POLE				1
PED POLE C	POLE				1
PED POLE D	POLE				1
TRAFFIC SIGNAL POLE A	POLE	1			
TRAFFIC SIGNAL POLE B	POLE		1		
TRAFFIC SIGNAL POLE C	POLE			1	
Grand Total		1	1	1	4

PROJECT	US 84 (0055-15-072)			
SHEET	293			
		PED POLE FND	416 6031	416 6032
		FOR CONTRACTOR INFO ONLY	DRILL SHAFT (TRF SIG POLE) (30 IN)	DRILL SHAFT (TRF SIG POLE) (36 IN)
TRF ID	TABLE	LF	LF	LF
PED POLE FND A	FOUNDATIONS	5.7		
PED POLE FND B	FOUNDATIONS	5.7		
PED POLE FND C	FOUNDATIONS	5.7		
PED POLE FND D	FOUNDATIONS	5.7		
SIGNAL POLE FND A	FOUNDATIONS		11.3	
SIGNAL POLE FND B	FOUNDATIONS			13.2
SIGNAL POLE FND C	FOUNDATIONS			13.2
Grand Total		22.8	11.3	26.4

STATE OF TEXAS
SCOTT A. ARNOLD
94782
LICENSED
PROFESSIONAL ENGINEER

Scott A. Arnold, P.E.
12/21/2020

Kimley»Horn F-928

© 2021

Texas Department of Transportation

TRAFFIC SIGNAL SUMMARY

AT N. 17TH STREET

SHEET 5 OF 5

FED.RD. DIV.NO.	PROJECT ID.	HIGHWAY NO.
6	(SEE TITLE SHEET)	US 84

STATE	DIST.	COUNTY	SHEET NO.
TEXAS	WAC	MCLENNAN	293
CONT.	SECT.	JOB	
0055	15	072	

FILENAME: pw:\\kh-pw.bentley.com:kh-pw-01\Documents\01 Active Projects\TX-FTW-063586010 - US 84 (Waco Drive)\WAC 0055150721\4 - Design\Plan Set\8. Traffic\US84_SIGSUM01_N17TH.dgn
PLOTTED: 12/21/2020

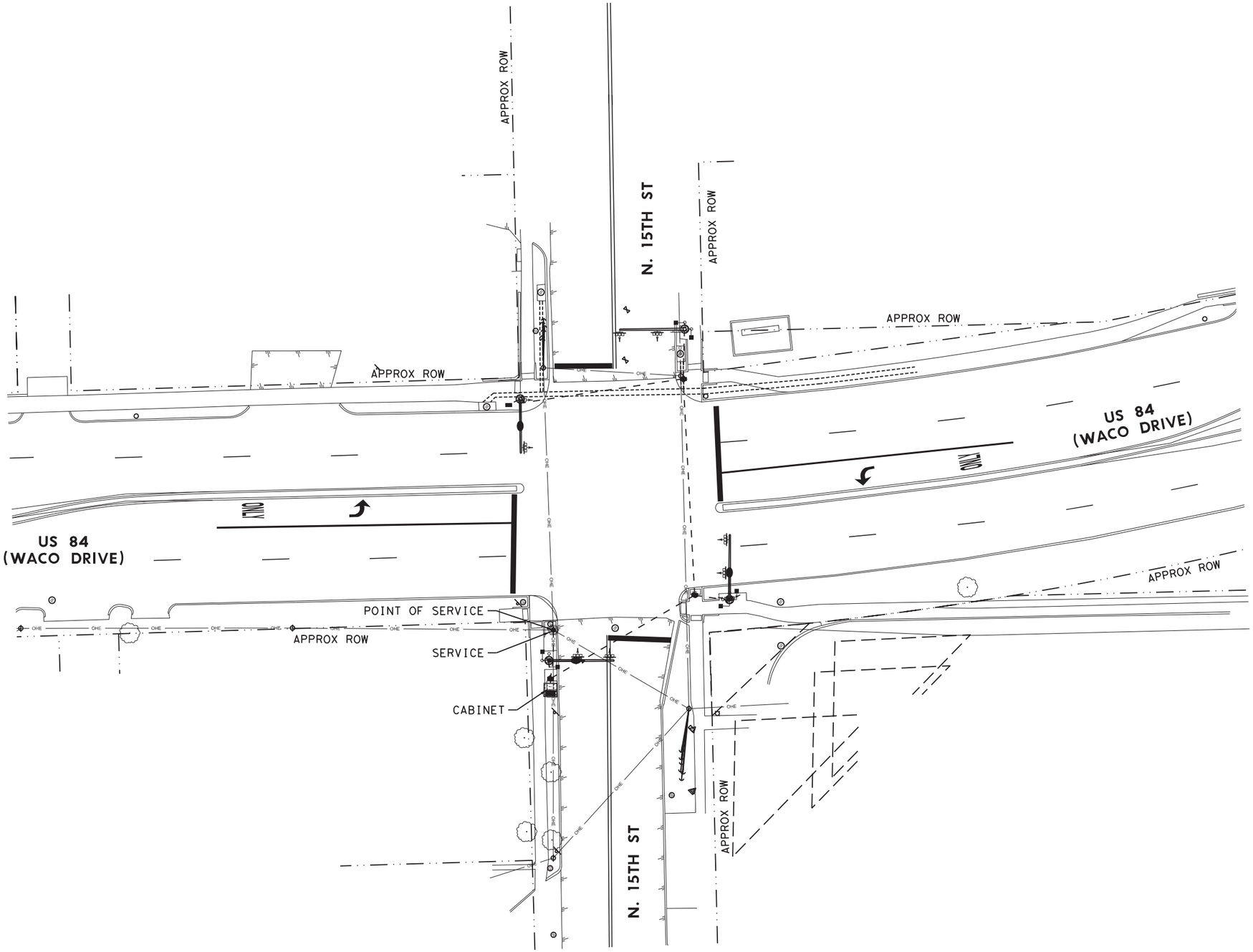

0' 20' 40'

LEGEND

- POINT OF SERVICE
- ELECTRICAL SERVICE
- CONDUIT, PVC
- GROUND BOX

NOTES

1. THE LOCATIONS SHOWN AS EXISTING CONDUIT RUNS ARE APPROXIMATE. THE EXACT LOCATION WILL BE DETERMINED IN THE FIELD. NO EXISTING CONDUIT WILL BE USED, SEE PROPOSED TRAFFIC SIGNAL SHEETS.

STATE OF TEXAS · SCOTT R. ARNOLD · 95783 · LICENSED · PROFESSIONAL ENGINEER

Scott R. Arnold, P.E.

12/21/2020

Kimley»Horn F-928

© 2021

Texas Department of Transportation

CONDITION DIAGRAM

AT N. 15TH STREET

SHEET 1 OF 5

FED.RD. DIV.NO.	PROJECT ID.	HIGHWAY NO.
6	(SEE TITLE SHEET)	US 84

STATE	DIST.	COUNTY	SHEET NO.
TEXAS	WAC	MCLENNAN	294
CONT.	SECT.	JOB	
0055	15	072	

FILENAME: pw:\\kh-pw.bentley.com:kh-pw-01\Documents\01 Active Projects\TX-FTW-063586010 - US 84 (Waco Drive)\WAC 0055150721\4 - Design\Plan Set\8. Traffic\US84_EXCON_N15TH.dgn
PLOTTED: 12/21/2020

CONTRACTOR'S INFO ONLY

BORE PIT REMOVAL/REPLACEMENT QUANTITIES
WITHIN TEMPORARY RIGHT OF ENTRY:
- *25 SF BLOCK SODDING ON NE CORNER
- *25 SF BLOCK SODDING ON SE CORNER
- *25 SF CONCRETE SIDEWALK AND 25 SF BLOCK SODDING ON SW CORNER

PROPOSED RING AND STRUCTURE

Ø1	Ø2 WALK	Ø3 NOT USED	Ø4 WALK
Ø5	Ø6 WALK	Ø7 NOT USED	Ø8

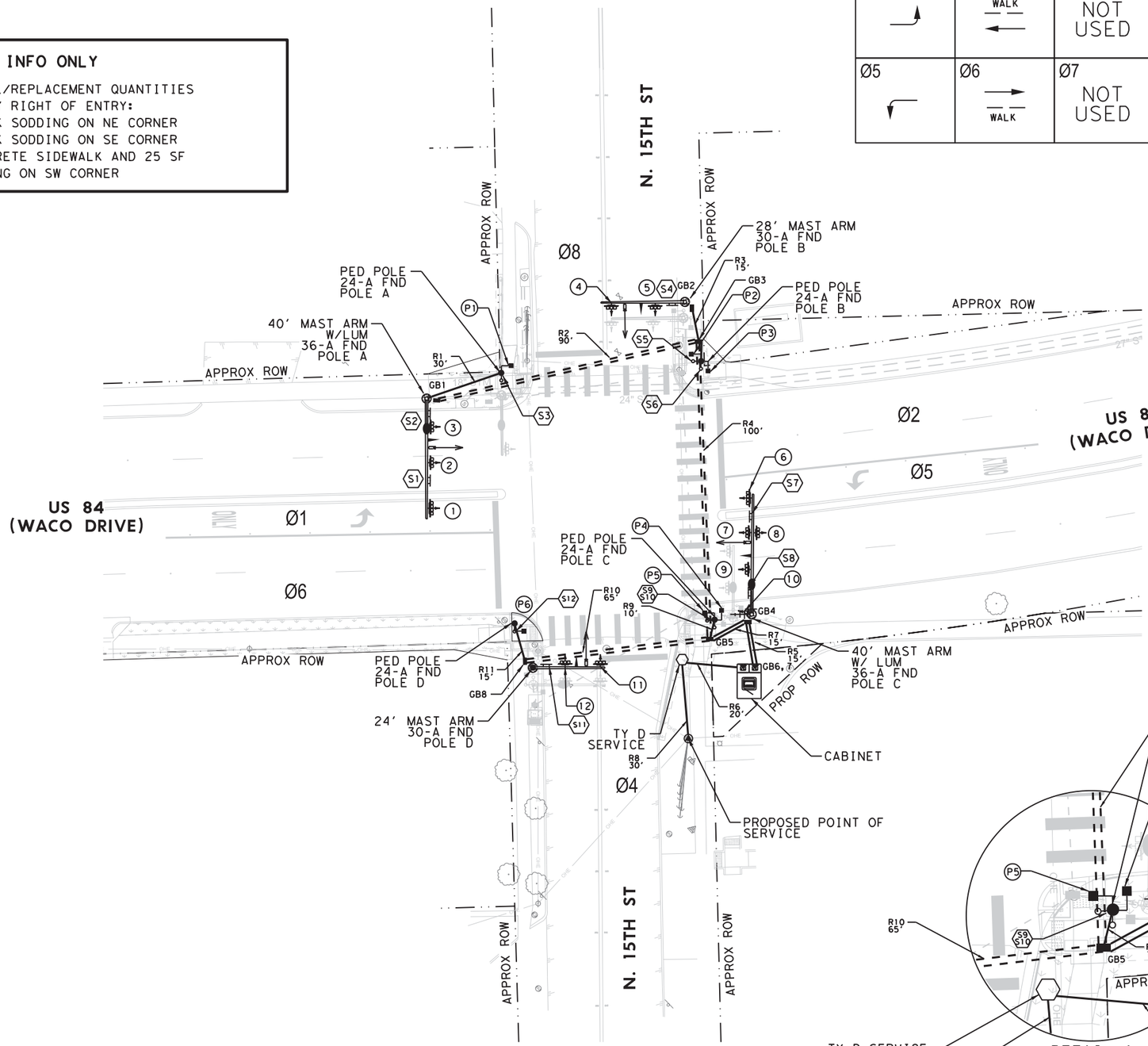

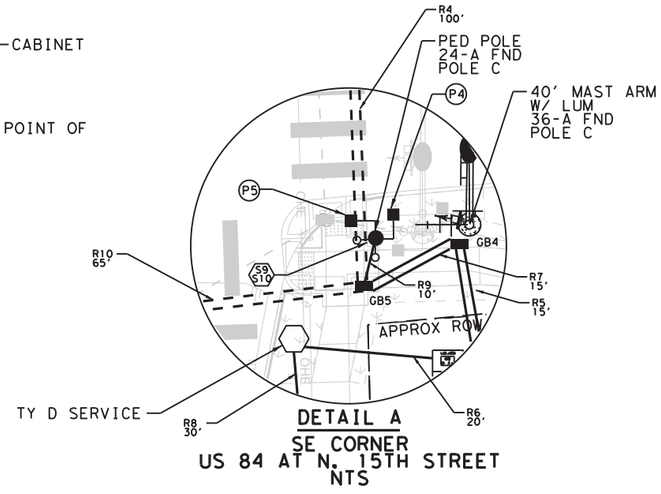

DETAIL A
SE CORNER
US 84 AT N. 15TH STREET
NTS

ELECTRICAL SERVICE DATA											
Electrical Service ID	Plan Sheet Number	Electrical Service Description	Service Conduit Size	Service Conductors No./Size	Safety Switch Amps	Main Ckt. Bkr. Pole/Amps	Two-Pole Contactor Amps	Panelbed/ Loadcenter Amp Rating	Branch Circuit ID	Branch Ckt. Bkr. Pole/Amps	Branch Circuit Amps	KVA Load
ES-14	295	ELEC SRV TY D 120/240 060 (NS)SS(E)PS(U)	2"	3/#6	N/A	2P/60	30	100	Sig. Controller	1P/30	28.6	4.3
									Luminaires	2P/15	6.9	

0' 20' 40'

LEGEND

- PROPOSED POINT OF SERVICE
- PROPOSED ELECTRICAL SERVICE
- PROPOSED CONDUIT, PVC
- PROPOSED CONDUIT, BORE
- PROPOSED VIVDS
- PROPOSED GROUND BOX (TY D)
- PROPOSED LED COUNTDOWN & APS
- PROPOSED LUMINAIRE
- PROPOSED SIGNAL POLE ASSEMBLY
- PROPOSED OPTICOM DETECTOR (INSTALL ONLY)
- PROPOSED ITS RADIO ANTENNA
- PROPOSED SIGNAL CABINET

NOTES:

1. SHORT RUNS FROM THE GROUND BOXES TO THE SIGNAL / PEDESTRIAN FOUNDATIONS WILL NOT BE PAID DIRECTLY, BUT SUBSIDIARY TO VARIOUS BID ITEMS. FOR THE SIGNAL POLES, THIS WILL BE 2 (3") CONDUITS.
2. INSTALL TRAFFIC SIGNAL CONTROLLER FOUNDATION PER TS-CF DETAIL.
3. ALL ROAD BORES TO BE (2) 3" SCH 80.

STATE OF TEXAS
SCOTT R ARNOLD
96782
LICENSED
PROFESSIONAL
ENGINEER

Scott R. Arnold, P.E.
03/01/2021

Kimley»Horn F-928

© 2021
Texas Department of Transportation

PROPOSED TRAFFIC SIGNAL

AT N. 15TH STREET

SHEET 2 OF 5

FED.RD. DIV.NO.	PROJECT ID.	HIGHWAY NO.
6	(SEE TITLE SHEET)	US 84

STATE	DIST.	COUNTY	SHEET NO.
TEXAS	WAC	MCLENNAN	295
CONT.	SECT.	JOB	
0055	15	072	

FILENAME: pw:\\kh-pw.bentley.com:kh-pw-01\Documents\01 Active Projects\TX-FTW-063586010 - US 84 (Waco Drive)\WAC 005515072\4 - Design\Plan Set\8. Traffic\US84_SIG01_N15TH.dgn
PLOTTED: 12/21/2020

SIGNAL WIRING DETAIL

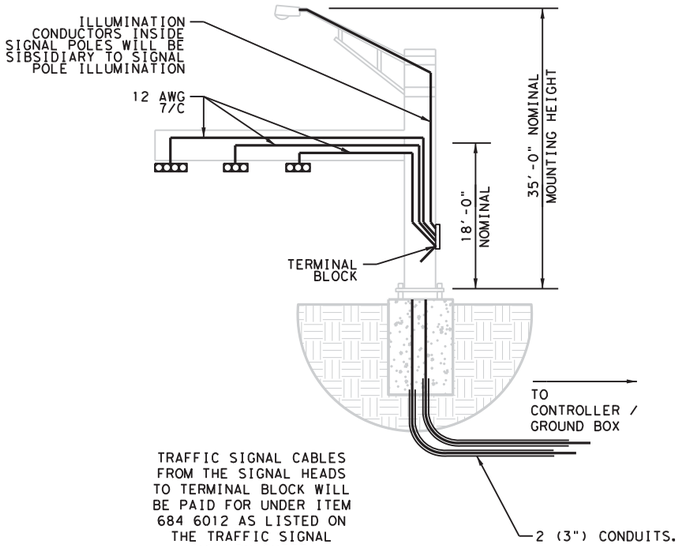

TRAFFIC SIGNAL CABLES FROM THE SIGNAL HEADS TO TERMINAL BLOCK WILL BE PAID FOR UNDER ITEM 684 6012 AS LISTED ON THE TRAFFIC SIGNAL SUMMARY SHEET.

EACH SIGNAL HEAD WILL BE WIRED TO TERMINAL BLOCK.

SIGNAL HEADS

PED SIGNAL HEADS P1, P2, P3, P4, P5, P6

SIGNAL HEADS #1, 6

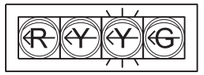

SIGNAL HEADS #2, 3, 4, 5, 7, 8, 9, 11, 12

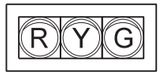

SIGNAL HEAD #10

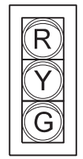

NOTES:

1. TY A SIGNS MOUNTED ON SIGNAL EQUIPMENT IS SHOWN FOR CONTRACTOR INFORMATION ONLY AND SUBSIDIARY TO ITEM 680 6002.

SIGNS

S3 S5 S10 S12

R10-3E(R)

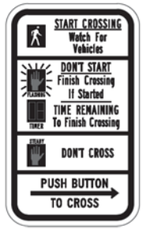

9" X 15"
TY A
ALUM

(0.94 SQ FT)
EACH

S6 S9

R10-3E(L)

9" X 15"
TY A
ALUM

(0.94 SQ FT)
EACH

S1 S7

R10-17T

36" X 42"
TY A
ALUM

(8.75 SQ FT)
EACH

S2

D3-1G

60" X 18"
TY A
ALUM

(7.5 SQ FT)
EACH

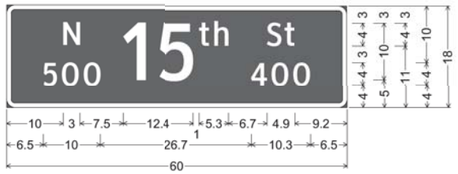

D3-1G;
1.5" Radius, 0.8" Border, White on, Green;
"N", ClearviewHwy-3-W; "500", ClearviewHwy-3-W;
"15", ClearviewHwy-3-W; "th", ClearviewHwy-3-W;
"St", ClearviewHwy-3-W; "400", ClearviewHwy-3-W;

S8

D3-1G

60" X 18"
TY A
ALUM

(7.5 SQ FT)
EACH

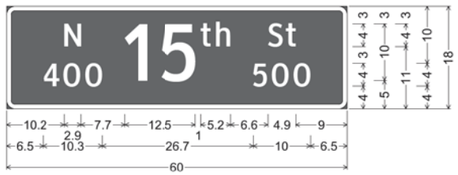

D3-1G;
1.5" Radius, 0.8" Border, White on, Green;
"N", ClearviewHwy-3-W; "400", ClearviewHwy-3-W;
"15", ClearviewHwy-3-W; "th", ClearviewHwy-3-W;
"St", ClearviewHwy-3-W; "500", ClearviewHwy-3-W;

S4

D3-1G

84" X 18"
TY A
ALUM

(10.5 SQ FT)
EACH

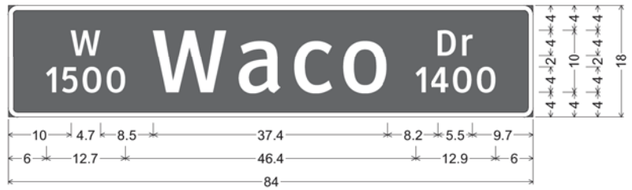

D3-1G;
1.5" Radius, 0.8" Border, White on, Green;
"W", ClearviewHwy-3-W; "1500", ClearviewHwy-3-W; "Waco", ClearviewHwy-3-W;
"Dr", ClearviewHwy-3-W; "1400", ClearviewHwy-3-W;

S11

D3-1G

84" X 18"
TY A
ALUM

(10.5 SQ FT)
EACH

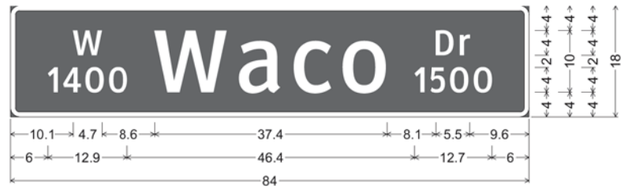

D3-1G;
1.5" Radius, 0.8" Border, White on, Green;
"W", ClearviewHwy-3-W; "1400", ClearviewHwy-3-W; "Waco", ClearviewHwy-3-W;
"Dr", ClearviewHwy-3-W; "1500", ClearviewHwy-3-W;

Scott R. Arnold, P.E.
12/21/2020

Kimley»Horn F-928

© 2021

Texas Department of Transportation

TRAFFIC SIGNAL SIGNS AND HEADS

AT N. 15TH STREET

SHEET 3 OF 5

FED.RD. DIV.NO.	PROJECT ID.	HIGHWAY NO.
6	(SEE TITLE SHEET)	US 84

STATE	DIST.	COUNTY	SHEET NO.
TEXAS	WAC	MCLENNAN	296
CONT.	SECT.	JOB	
0055	15	072	

FILENAME: pw:\\kh-pw.bentley.com:kh-pw-01\Documents\01 Active Projects\TX-FTW-063586010 - US 84 (Waco Drive)\WAC 0055150724 - Design\Plan Set\8. Traffic\US84_SIGSIGN01_N15TH.dgn
PLOTTED: 12/21/2020

PROJECT	US 84 (0055-15-072)
SHEET	297

			618 6046	618 6029	618 6054	620 6007	620 6008	620 6009	620 6010	684 6007	684 6012	684 6021	684 6049	6306 6007	OPTICOM CABLE	ITS RADIO CABLE
			CONDT (PVC) (SCH 80) (2")	CONDT (PVC) (SCH 40) (3")	CONDT (PVC) (SCH 80) (3") (BORE)	ELEC CONDR (NO.8) BARE	ELEC CONDR (NO.8) INSULATED	ELEC CONDR (NO.6) BARE	ELEC CONDR (NO.6) INSULATED	TRF SIG CBL (TY A)(12 AWG)(2 CONDR)	TRF SIG CBL (TY A)(12 AWG)(7 CONDR)	TRF SIG CBL (TY A)(12 AWG)(16 CONDR)	TRF SIG CBL (TY A)(16 AWG)(3 CONDR)	VIVDS CABLING	FOR CONTRACTOR INFO ONLY	FOR CONTRACTOR INFO ONLY
TRF ID	TABLE	Location	LF	LF	LF	LF	LF	LF	LF		LF	LF	LF	LF	LF	LF
CONDUIT R01	CONDUIT	TRENCH		30		30				30			30			
CONDUIT R02-1	CONDUIT	BORE			90	90	180			90		90	90	90	90	
CONDUIT R02-2	CONDUIT	BORE			90	90										
CONDUIT R03	CONDUIT	TRENCH		15		15						15		15	15	
CONDUIT R04-1	CONDUIT	BORE			100	100	200			300		200	300	200	200	
CONDUIT R04-2	CONDUIT	BORE			100	100										
CONDUIT R05-1	CONDUIT	TRENCH		15		15	30			90		60	90	60	60	20
CONDUIT R05-2	CONDUIT	TRENCH		15		15										
CONDUIT R06	CONDUIT	TRENCH		20			40	20	40							
CONDUIT R07-1	CONDUIT	TRENCH		15		15	30			90		45	90	45	45	
CONDUIT R07-2	CONDUIT	TRENCH		15		15										
CONDUIT R08*	CONDUIT	TRENCH	30													
CONDUIT R09	CONDUIT	TRENCH		10		10				20			20			
CONDUIT R10-1	CONDUIT	BORE			65	65										
CONDUIT R10-2	CONDUIT	BORE			65	65				65		65	65	65	65	
CONDUIT R11	CONDUIT	TRENCH		15		15				15			15			
PED POLE A	CONDUIT	IN PED POLE								5			10			
PED POLE B	CONDUIT	IN PED POLE								10			20			
PED POLE C	CONDUIT	IN PED POLE								10			20			
PED POLE D	CONDUIT	IN PED POLE								5			10			
SIGNAL POLE A	CONDUIT	IN SIGNAL POLE									130			60	35	
SIGNAL POLE B	CONDUIT	IN SIGNAL POLE									80			40	35	
SIGNAL POLE C	CONDUIT	IN SIGNAL POLE									210			45	40	30
SIGNAL POLE D	CONDUIT	IN SIGNAL POLE									75			35	30	
Grand Total			30	150	510	640	480	20	40	730	495	475	760	655	615	50

*CONDUIT RUN 8 SHALL INCLUDE A SWEEPING 90° PVC AND SHALL STUB UP AT BOTTOM OF ONCOR POLE.

FILENAME: pw:\\kh-pw.bentley.com:kh-pw-01\Documents\01 Active Projects\TX-FTW-063586010 - US 84 (Waco Drive)\WAC 0055150721\4 - Design\Plan Set\8. Traffic\US84_CONSUM01_N15TH.dgn
PLOTTED: 12/21/2020

Scott R. Arnold, P.E.

12/21/2020

Kimley»Horn F-928

© 2021

Texas Department of Transportation

CONDUIT AND CONDUCTOR SUMMARY

AT N. 15TH STREET

SHEET 4 OF 5

FED.RD. DIV.NO.	PROJECT ID.	HIGHWAY NO.
6	(SEE TITLE SHEET)	US 84

STATE	DIST.	COUNTY	SHEET NO.
TEXAS	WAC	MCLENNAN	297
CONT.	SECT.	JOB	
0055	15	072	

PROJECT	US 84 (0055-15-072)												
SHEET	298												
		624 6010	628 6144	680 6002	680 6004	682 6018	688 6001	688 6003	6062 6038	6306 6001	6306 6002	CABINET	OPTICOM	TY A SIGN
		GROUND BOX TY D (162922)W/APRON	ELC SRV TY D 120/240 060(NS)SS(E)PS(U)	INSTALL HWY TRF SIG (ISOLATED)	REMOVING TRAFFIC SIGNALS	PED SIG SEC (LED)(COUNTDOWN)	PED DETECT PUSH BUTTON (APS)	PED DETECTOR CONTROLLER UNIT	ITS RADIO (DUAL)(5 GHZ/5 GHZ)-C-U	VIVDS PROSR SYS	VIVDS CAM ASSY FXD LNS	TxDOT CABINET AND CONTROLLER	FOR CONTRACTOR INFO ONLY	FOR CONTRACTOR INFO ONLY
TRF ID	TABLE	EA	EA	EA	EA	EA	EA	EA	EA	EA	EA	EA	EA	SF
CABINET	MISCELLANEOUS											1		
GROUND BOX	MISCELLANEOUS	8												
ITS RADIO	MISCELLANEOUS								1					
OPTICOM	MISCELLANEOUS												4	
P1	MISCELLANEOUS					1								
P2	MISCELLANEOUS					1								
P3	MISCELLANEOUS					1								
P4	MISCELLANEOUS					1								
P5	MISCELLANEOUS					1								
P6	MISCELLANEOUS					1								
PED	MISCELLANEOUS						6	1						
SERVICE	MISCELLANEOUS		1											
SIGN	MISCELLANEOUS													60
SIGNAL	MISCELLANEOUS			1	1									
VIVDS	MISCELLANEOUS									1	4			
Grand Total		8	1	1	1	6	6	1	1	1	4	1	4	60

PROJECT	US 84 (0055-15-072)								
SHEET	298								
		682 6001	682 6002	682 6003	682 6004	682 6005	682 6006	682 6054	682 6055
		VEH SIG SEC (12")LED(GRN)	VEH SIG SEC (12")LED(GRN ARW)	VEH SIG SEC (12")LED(YEL)	VEH SIG SEC (12")LED(YEL ARW)	VEH SIG SEC (12")LED(RED)	VEH SIG SEC (12")LED(RED ARW)	BACKPLATE W/REF BRDR(3 SEC)(VENT)ALUM	BACKPLATE W/REF BRDR(4 SEC)(VENT)ALUM
TRF ID	TABLE	EA	EA	EA	EA	EA	EA	EA	EA
SIGNAL HEAD 01	SIGNAL HEAD		1		2		1		1
SIGNAL HEAD 02	SIGNAL HEAD	1		1		1		1	
SIGNAL HEAD 03	SIGNAL HEAD	1		1		1		1	
SIGNAL HEAD 04	SIGNAL HEAD	1		1		1		1	
SIGNAL HEAD 05	SIGNAL HEAD	1		1		1		1	
SIGNAL HEAD 06	SIGNAL HEAD		1		2		1		1
SIGNAL HEAD 07	SIGNAL HEAD	1		1		1		1	
SIGNAL HEAD 08	SIGNAL HEAD	1		1		1		1	
SIGNAL HEAD 09	SIGNAL HEAD	1		1		1		1	
SIGNAL HEAD 10	SIGNAL HEAD	1		1		1		1	
SIGNAL HEAD 11	SIGNAL HEAD	1		1		1		1	
SIGNAL HEAD 12	SIGNAL HEAD	1		1		1		1	
Grand Total		10	2	10	4	10	2	10	2

PROJECT	US 84 (0055-15-072)				
SHEET	298				
		0686 6025	0686 6029	0686 6043	687 6001
		INS TRF SIG PL AM (S)1 ARM(24')	INS TRF SIG PL AM (S)1 ARM(28')	INS TRF SIG PL AM(S)1 ARM(40')LUM	PED POLE ASSEMBLY
TRF ID	TABLE	EA	EA	EA	EA
PED POLE A	POLE				1
PED POLE B	POLE				1
PED POLE C	POLE				1
PED POLE D	POLE				1
TRAFFIC SIGNAL POLE A	POLE			1	
TRAFFIC SIGNAL POLE B	POLE		1		
TRAFFIC SIGNAL POLE C	POLE			1	
TRAFFIC SIGNAL POLE D	POLE	1			
Grand Total		1	1	2	4

PROJECT	US 84 (0055-15-072)			
SHEET	298			
		FED POLE FND	416 6031	416 6032
		FOR CONTRACTOR INFO ONLY	DRILL SHAFT (TRF SIG POLE) (30 IN)	DRILL SHAFT (TRF SIG POLE) (36 IN)
TRF ID	TABLE	LF	LF	LF
PED POLE FND A	FOUNDATIONS	5.7		
PED POLE FND B	FOUNDATIONS	5.7		
PED POLE FND C	FOUNDATIONS	5.7		
PED POLE FND D	FOUNDATIONS	5.7		
SIGNAL POLE FND A	FOUNDATIONS			13.2
SIGNAL POLE FND B	FOUNDATIONS		11.3	
SIGNAL POLE FND C	FOUNDATIONS			13.2
SIGNAL POLE FND D	FOUNDATIONS		11.3	
Grand Total		22.8	22.6	26.4

STATE OF TEXAS
SCOTT R ARNOLD
96782
LICENSED
PROFESSIONAL ENGINEER

Scott R Arnold, P.E.

12/21/2020

Kimley»Horn F-928

© 2021

Texas Department of Transportation

TRAFFIC SIGNAL SUMMARY

AT N. 15TH STREET

SHEET 5 OF 5

FED.RD. DIV.NO.	PROJECT ID.	HIGHWAY NO.
6	(SEE TITLE SHEET)	US 84

STATE	DIST.	COUNTY	SHEET NO.
TEXAS	WAC	MCLENNAN	
CONT.	SECT.	JOB	298
0055	15	072	

FILENAME: pw:\\kh-pw.bentley.com:kh-pw-01\Documents\01 Active Projects\TX-FTW-063586010 - US 84 (Waco Drive)\WAC 005515072\4 - Design\Plan Set\8. Traffic\US84_SIGSUM01_N15TH.dgn
PLOTTED: 12/21/2020

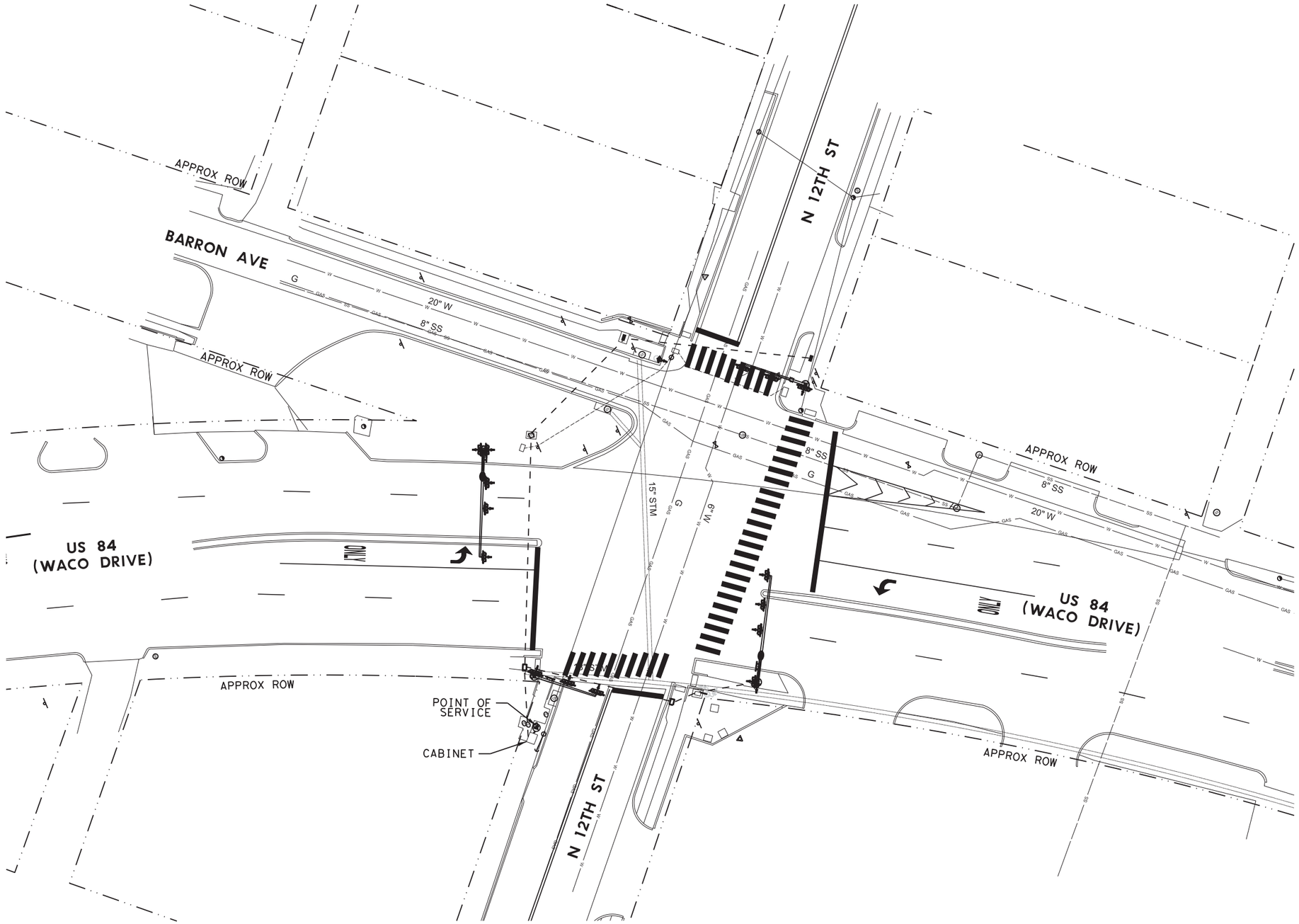

N

0' 20' 40'

LEGEND

- POINT OF SERVICE
- ELECTRICAL SERVICE
- CONDUIT, PVC
- GROUND BOX

NOTES

1. THE LOCATIONS SHOWN AS EXISTING CONDUIT RUNS ARE APPROXIMATE. THE EXACT LOCATION WILL BE DETERMINED IN THE FIELD. NO EXISTING CONDUIT WILL BE USED, SEE PROPOSED TRAFFIC SIGNAL SHEETS.

STATE OF TEXAS
SCOTT R. ARNOLD
96782
LICENSED
PROFESSIONAL ENGINEER

Scott R. Arnold, P.E.
12/21/2020

Kimley»Horn F-928

© 2021

Texas Department of Transportation

CONDITION DIAGRAM

AT N. 12TH STREET

SHEET 1 OF 5

FED.RD. DIV.NO.	PROJECT NO.	HIGHWAY NO.
6	(SEE TITLE SHEET)	US 84

STATE	DIST.	COUNTY	SHEET NO.
TEXAS	WAC	MCLENNAN	
CONT.	SECT.	JOB	299
0055	15	072	

PROPOSED RING AND STRUCTURE

Ø1	Ø2 WALK	Ø3 NOT USED	Ø4 WALK
Ø5	Ø6 WALK	Ø7 NOT USED	Ø8

CONTRACTOR'S INFO ONLY

BORE PIT REMOVAL/REPLACEMENT QUANTITIES WITHIN TEMPORARY RIGHT OF ENTRY:
- *50 SF OF BLOCK SODDING ON NW CORNER
- *25 SF OF BLOCK SODDING ON SW CORNER

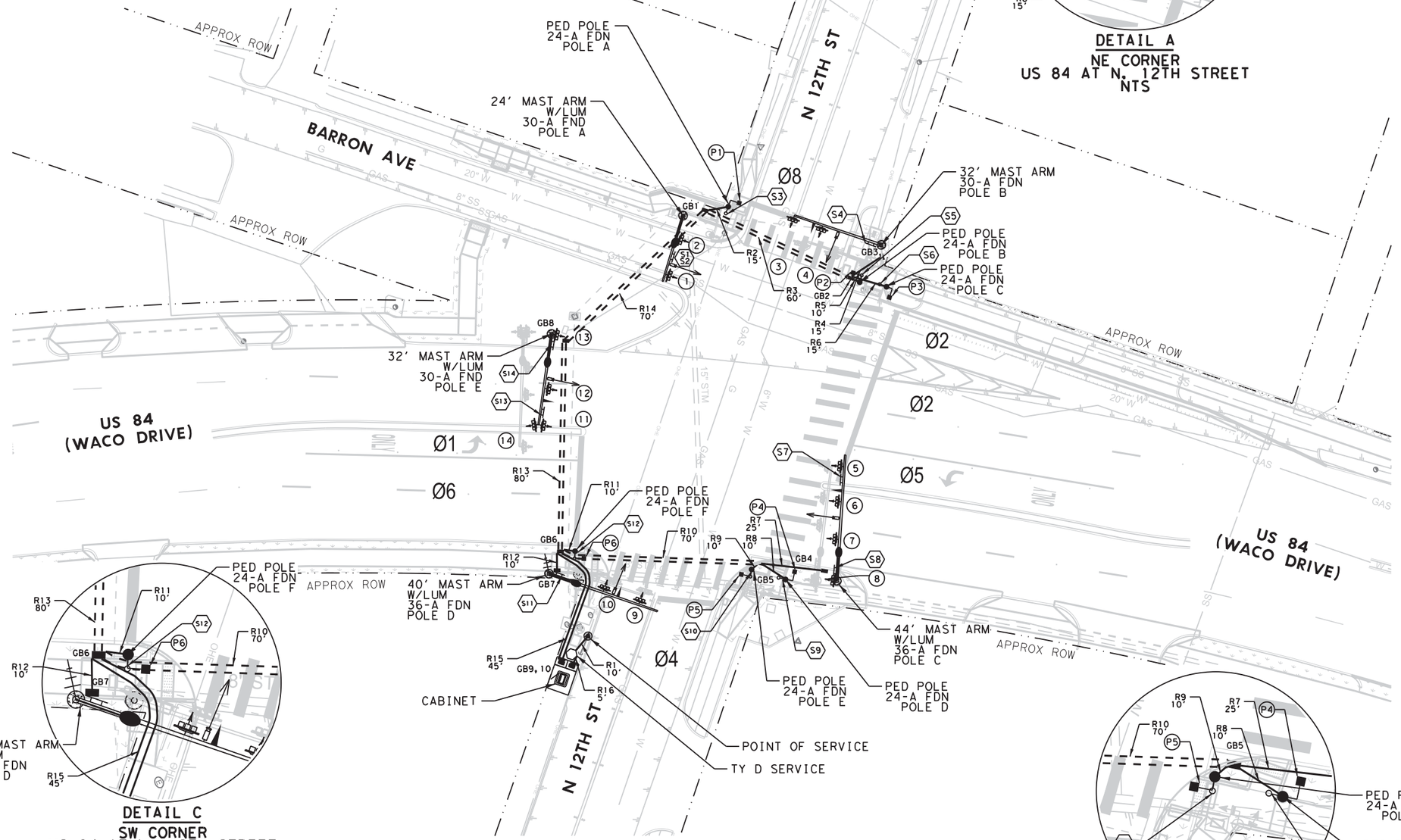

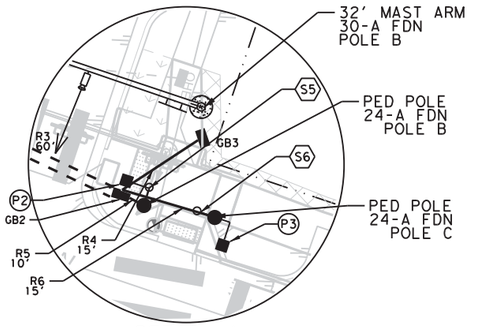

DETAIL A
NE CORNER
US 84 AT N. 12TH STREET
NTS

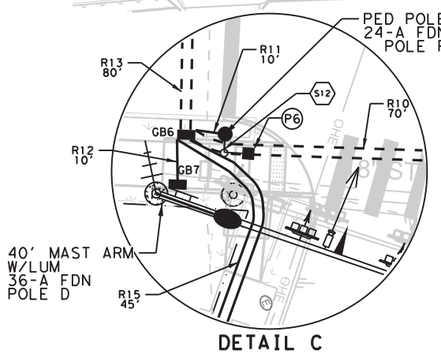

DETAIL C
SW CORNER
US 84 AT N. 12TH STREET
NTS

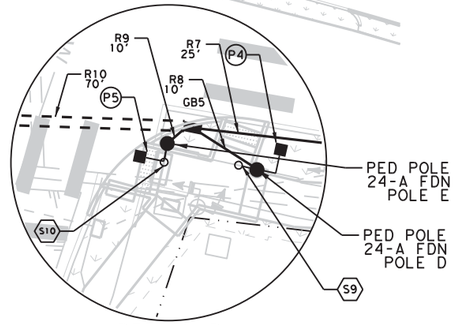

DETAIL B
SE CORNER
US 84 AT N. 12TH STREET
NTS

0' 20' 40'

LEGEND

- PROPOSED POINT OF SERVICE
- PROPOSED ELECTRICAL SERVICE
- PROPOSED CONDUIT, PVC
- PROPOSED CONDUIT, BORE
- PROPOSED VIVDS
- PROPOSED GROUND BOX (TY D)
- PROPOSED LED COUNTDOWN & APS
- PROPOSED LUMINAIRE
- PROPOSED SIGNAL POLE ASSEMBLY
- PROPOSED OPTICOM DETECTOR (INSTALL ONLY)
- PROPOSED ITS RADIO ANTENNA
- PROPOSED SIGNAL CABINET

NOTES

1. SHORT RUNS FROM THE GROUND BOXES TO THE SIGNAL / PEDESTRIAN FOUNDATIONS WILL NOT BE PAID DIRECTLY, BUT SUBSIDIARY TO VARIOUS BID ITEMS. FOR THE SIGNAL POLES, THIS WILL BE 2 (3") CONDUITS.
2. INSTALL TRAFFIC SIGNAL CONTROLLER FOUNDATION PER TS-CF DETAIL.
3. ALL ROAD BORES TO BE (2) 3" SCH 80.

ELECTRICAL SERVICE DATA

Electrical Service ID	Plan Sheet Number	Electrical Service Description	Service Conduit Size	Service Conductors No./Size	Safety Switch Amps	Main Ckt. Bkr. Pole/Amps	Two-Pole Contactor Amps	Panelbed/ Loadcenter Amp Rating	Branch Circuit ID	Branch Ckt. Bkr. Pole/Amps	Branch Circuit Amps	KVA Load
ES-15	300	ELEC SRV TY D 120/240 060 (NS)SS(E)PS(U)	2"	3/#6	N/A	2P/60	30	100	Sig. Controller	1P/30	31.4	4.9
									Luminaires	2P/15	9.3	

STATE OF TEXAS
SCOTT K. ARNOLD
96782
LICENSED
PROFESSIONAL ENGINEER

Scott K. Arnold, P.E.
03/01/2021

Kimley»Horn F-928

© 2021
Texas Department of Transportation

PROPOSED TRAFFIC SIGNAL

AT N. 12TH STREET

SHEET 2 OF 5

FED.RD. DIV.NO.	PROJECT ID.	HIGHWAY NO.
6	(SEE TITLE SHEET)	US 84

STATE	DIST.	COUNTY	SHEET NO.
TEXAS	WAC	MCLENNAN	300
CONT.	SECT.	JOB	
0055	15	072	

FILENAME: pw:\\kh-pw.bentley.com:kh-pw-01\Documents\01 Active Projects\TX-FTW-063586010 - US 84 (Waco Drive)\WAC 005515072\4 - Design\Plan Set\8. Traffic\US84_SIG01_N12TH.dgn
PLOTTED: 12/21/2020

SIGNAL WIRING DETAIL

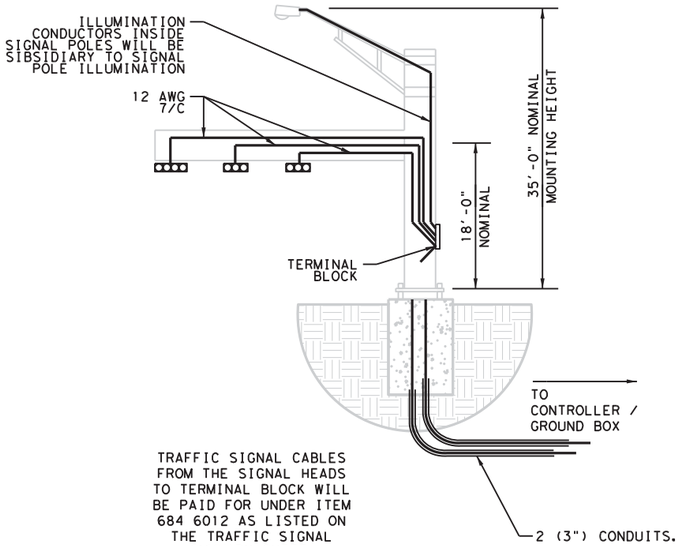

TRAFFIC SIGNAL CABLES FROM THE SIGNAL HEADS TO TERMINAL BLOCK WILL BE PAID FOR UNDER ITEM 684 6012 AS LISTED ON THE TRAFFIC SIGNAL SUMMARY SHEET.

EACH SIGNAL HEAD WILL BE WIRED TO TERMINAL BLOCK.

SIGNAL HEADS

PED SIGNAL HEADS P1, P2, P3, P4, P5, P6

SIGNAL HEADS #1, 2, 3, 4, 6, 7, 9, 10, 12, 14

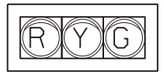

SIGNAL HEAD #5, 11

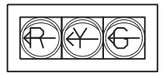

SIGNAL HEADS #8, 13

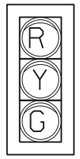

NOTES:

1. TY A SIGNS MOUNTED ON SIGNAL EQUIPMENT IS SHOWN FOR CONTRACTOR INFORMATION ONLY AND SUBSIDIARY TO ITEM 680 6002.

SIGNS

S3 S5 S6 S10

R10-3E(R)

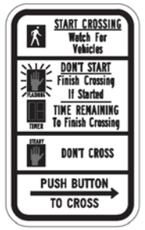

9" X 15"
TY A
ALUM

(0.94 SQ FT)
EACH

S9 S12

R10-3E(L)

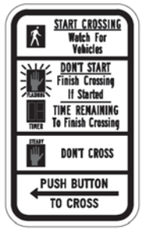

9" X 15"
TY A
ALUM

(0.94 SQ FT)
EACH

S7 S13

R10-5

30" X 36"
TY A
ALUM

(7.5 SQ FT)
EACH

S1

W11-2

36" X 36"
TY A
ALUM

(9 SQ FT)
EACH

S2

W16-9P

24" X 12"
TY A
ALUM

(2 SQ FT)
EACH

S8

D3-1G

60" X 18"
TY A
ALUM

(7.5 SQ FT)
EACH

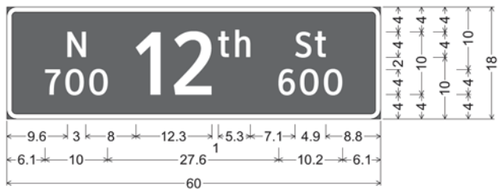

D3-1G;
1.5" Radius, 0.8" Border, White on, Green;
"N", ClearviewHwy-3-W; "700", ClearviewHwy-3-W;
"12", ClearviewHwy-3-W; "th", ClearviewHwy-3-W;
"St", ClearviewHwy-3-W; "600", ClearviewHwy-3-W;

S14

D3-1G

60" X 18"
TY A
ALUM

(7.5 SQ FT)
EACH

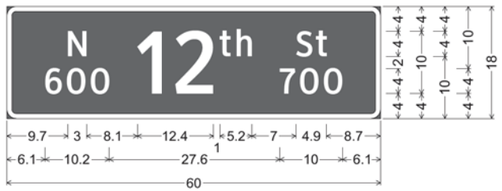

D3-1G;
1.5" Radius, 0.8" Border, White on, Green;
"N", ClearviewHwy-3-W; "600", ClearviewHwy-3-W;
"12", ClearviewHwy-3-W; "th", ClearviewHwy-3-W;
"St", ClearviewHwy-3-W; "700", ClearviewHwy-3-W;

S4

D3-1G

84" X 18"
TY A
ALUM

(10.5 SQ FT)
EACH

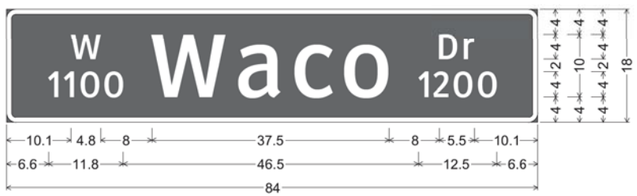

D3-1G;
1.5" Radius, 0.8" Border, White on, Green;
"W", ClearviewHwy-3-W; "1100", ClearviewHwy-3-W; "Waco", ClearviewHwy-3-W;
"Dr", ClearviewHwy-3-W; "1200", ClearviewHwy-3-W;

S11

D3-1G

84" X 18"
TY A
ALUM

(10.5 SQ FT)
EACH

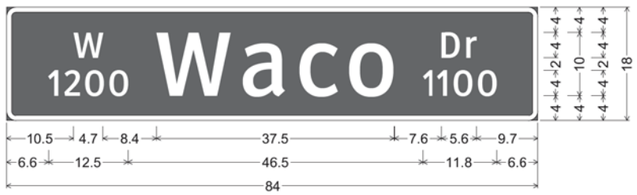

D3-1G;
1.5" Radius, 0.8" Border, White on, Green;
"W", ClearviewHwy-3-W; "1200", ClearviewHwy-3-W; "Waco", ClearviewHwy-3-W;
"Dr", ClearviewHwy-3-W; "1100", ClearviewHwy-3-W;

Scott R. Arnold, P.E.

03/01/2021

Kimley»Horn F-928

© 2021

Texas Department of Transportation

TRAFFIC SIGNAL SIGNS AND HEADS

AT N. 12TH STREET

SHEET 3 OF 5

FED.RD. DIV.NO.	PROJECT ID.	HIGHWAY NO.
6	(SEE TITLE SHEET)	US 84

STATE	DIST.	COUNTY	SHEET NO.
TEXAS	WAC	MCLENNAN	301
CONT.	SECT.	JOB	
0055	15	072	

FILENAME: pw:\\kh-pw.bentley.com:kh-pw-01\Documents\01 Active Projects\TX-FTW-063586010 - US 84 (Waco Drive)\WAC 005515072\4 - Design\Plan Set\8. Traffic\US84_SIGSIGN01_N12TH.dgn
PLOTTED: 12/21/2020

PROJECT	US 84 (0055-15-072)
SHEET	302

			618 6046 CONDT (PVC) (SCH 80) (2")	618 6023 CONDT (PVC) (SCH 40) (2")	618 6029 CONDT (PVC) (SCH 40) (3")	618 6054 CONDT (PVC) (SCH 80) (3") (BORE)	620 6007 ELEC CONDR (NO.8) BARE	620 6008 ELEC CONDR (NO.8) INSULATED	620 6009 ELEC CONDR (NO.6) BARE	620 6010 ELEC CONDR (NO.6) INSULATED	684 6007 TRF SIG CBL (TY A)(12 AWG)(2 CONDR)	684 6012 TRF SIG CBL (TY A)(12 AWG)(7 CONDR)	684 6021 TRF SIG CBL (TY A)(12 AWG)(16 CONDR)	684 6049 TRF SIG CBL (TY A)(16 AWG)(3 CONDR)	6306 6007 VIVDS CABLING	OPTICOM CABLE FOR CONTRACTOR INFO ONLY	ITS RADIO CABLE FOR CONTRACTOR INFO ONLY
TRF ID	TABLE	Location	LF	LF	LF	LF	LF	LF	LF	LF	LF	LF	LF	LF	LF	LF	LF
CONDUIT R01*	CONDUIT	TRENCH	10														
CONDUIT R02	CONDUIT	TRENCH			15		15				15			15			
CONDUIT R03-1	CONDUIT	BORE				60	60				120		60	120	60	60	
CONDUIT R03-2	CONDUIT	BORE				60	60										
CONDUIT R04	CONDUIT	TRENCH			15		15						15		15	15	
CONDUIT R05	CONDUIT	TRENCH			10		10				10			10			
CONDUIT R06	CONDUIT	TRENCH			15		15				15			15			
CONDUIT R07	CONDUIT	TRENCH			25		25	50					25		25	25	
CONDUIT R08	CONDUIT	TRENCH			10		10				10			10			
CONDUIT R09	CONDUIT	TRENCH			10		10				10			10			
CONDUIT R10-1	CONDUIT	BORE				70	70	140			140		70	140	70	70	
CONDUIT R10-2	CONDUIT	BORE				70	70										
CONDUIT R11	CONDUIT	TRENCH			10		10				10			10			
CONDUIT R12	CONDUIT	TRENCH			10		10	40					10		10	10	
CONDUIT R13-1	CONDUIT	BORE				80	80	160			240		160	240	160	160	
CONDUIT R13-2	CONDUIT	BORE				80	80						80		80		
CONDUIT R14-1	CONDUIT	BORE				70	70	140			210		140	210	140	70	
CONDUIT R14-2	CONDUIT	BORE				70	70										
CONDUIT R15-1	CONDUIT	TRENCH			45		45	180			135		135	135	135	90	45
CONDUIT R15-2	CONDUIT	TRENCH			45		45				135		90	135	90	90	
CONDUIT R16	CONDUIT	BORE		5				20	5	10							
PED POLE A	CONDUIT	IN PED POLE									5			10			
PED POLE B	CONDUIT	IN PED POLE									5			10			
PED POLE C	CONDUIT	IN PED POLE									5			10			
PED POLE D	CONDUIT	IN PED POLE									5			10			
PED POLE E	CONDUIT	IN PED POLE									5			10			
PED POLE F	CONDUIT	IN PED POLE									5			10			
SIGNAL POLE A	CONDUIT	IN SIGNAL POLE										75			40		
SIGNAL POLE B	CONDUIT	IN SIGNAL POLE										90			40	45	
SIGNAL POLE C	CONDUIT	IN SIGNAL POLE										160			45	55	
SIGNAL POLE D	CONDUIT	IN SIGNAL POLE										90			45	50	30
SIGNAL POLE E	CONDUIT	IN SIGNAL POLE										160			40	50	
Grand Total			10	5	210	560	770	730	5	10	1080	575	785	1110	995	790	75

*CONDUIT RUN 1 SHALL INCLUDE A SWEEPING 90° PVC AND SHALL STUB UP AT BOTTOM OF ONCOR POLE.

FILENAME: pw:\\kh-pw.bentley.com:kh-pw-01\Documents\01 Active Projects\TX-FTW-063586010 - US 84 (Waco Drive)\WAC 005515072\4 - Design\Plan Set\8. Traffic\US84_CONSUM01_N12TH.dgn
PLOTTED: 12/21/2020

Scott R. Arnold, P.E.

12/21/2020

Kimley»Horn F-928

© 2021

Texas Department of Transportation

CONDUIT AND CONDUCTOR SUMMARY

AT N. 12TH STREET

SHEET 4 OF 5

FED.RD. DIV.NO.	PROJECT ID.	HIGHWAY NO.
6	(SEE TITLE SHEET)	US 84

STATE	DIST.	COUNTY	SHEET NO.
TEXAS	WAC	MCLENNAN	302
CONT.	SECT.	JOB	
0055	15	072	

PROJECT	US 84 (0055-15-072)												
SHEET	303												
		624 6010	628 6144	680 6002	680 6004	682 6018	688 6001	688 6003	6062 6038	6306 6001	6306 6002	CABINET	OPTICOM	TY A SIGN
		GROUND BOX TY D (162922)W/APRON	ELC SRV TY D 120/240 060(NS)SS(E)PS(U)	INSTALL HWY TRF SIG (ISOLATED)	REMOVING TRAFFIC SIGNALS	PED SIG SEC (LED)(COUNTDOWN)	PED DETECT PUSH BUTTON (APS)	PED DETECTOR CONTROLLER UNIT	ITS RADIO (DUAL)(5 GHZ/5 GHZ)-C-U	VIVDS PROSR SYS	VIVDS CAM ASSY FXD LNS	TxDOT CABINET AND CONTROLLER	FOR CONTRACTOR INFO ONLY	FOR CONTRACTOR INFO ONLY
TRF ID	TABLE	EA	EA	EA	EA	EA	EA	EA	EA	EA	EA	EA	EA	SF
CABINET	MISCELLANEOUS											1		
GROUND BOX	MISCELLANEOUS	10												
ITS RADIO	MISCELLANEOUS								1					
OPTICOM	MISCELLANEOUS												4	
P1	MISCELLANEOUS					1								
P2	MISCELLANEOUS					1								
P3	MISCELLANEOUS					1								
P4	MISCELLANEOUS					1								
P5	MISCELLANEOUS					1								
P6	MISCELLANEOUS					1								
PED	MISCELLANEOUS						6	1						
SERVICE	MISCELLANEOUS		1											
SIGN	MISCELLANEOUS													71
SIGNAL	MISCELLANEOUS			1	1									
VIVDS	MISCELLANEOUS									1	5			
Grand Total		10	1	1	1	6	6	1	1	1	5	1	4	71

PROJECT	US 84 (0055-15-072)							
SHEET	303							
		682 6001	682 6002	682 6003	682 6004	682 6005	682 6006	682 6054
		VEH SIG SEC (12")LED(GRN)	VEH SIG SEC (12")LED(GRN ARW)	VEH SIG SEC (12")LED(YEL)	VEH SIG SEC (12")LED(YEL ARW)	VEH SIG SEC (12")LED(RED)	VEH SIG SEC (12")LED(RED ARW)	BACKPLATE W/REF BRDR(3 SEC)(VENT)ALUM
TRF ID	TABLE	EA	EA	EA	EA	EA	EA	EA
SIGNAL HEAD 01	SIGNAL HEAD	1		1		1		1
SIGNAL HEAD 02	SIGNAL HEAD	1		1		1		1
SIGNAL HEAD 03	SIGNAL HEAD	1		1		1		1
SIGNAL HEAD 04	SIGNAL HEAD	1		1		1		1
SIGNAL HEAD 05	SIGNAL HEAD		1		1		1	1
SIGNAL HEAD 06	SIGNAL HEAD	1		1		1		1
SIGNAL HEAD 07	SIGNAL HEAD	1		1		1		1
SIGNAL HEAD 08	SIGNAL HEAD	1		1		1		1
SIGNAL HEAD 09	SIGNAL HEAD	1		1		1		1
SIGNAL HEAD 10	SIGNAL HEAD	1		1		1		1
SIGNAL HEAD 11	SIGNAL HEAD		1		1		1	1
SIGNAL HEAD 12	SIGNAL HEAD	1		1		1		1
SIGNAL HEAD 13	SIGNAL HEAD	1		1		1		1
SIGNAL HEAD 14	SIGNAL HEAD	1		1		1		1
Grand Total		12	2	12	2	12	2	14

PROJECT	US 84 (0055-15-072)						
SHEET	303						
		686 6027	686 6033	686 6035	686 6043	686 6047	687 6001
		INS TRF SIG PL AM(S)1 ARM(24')LUM	INS TRF SIG PL AM(S)1 ARM(32')	INS TRF SIG PL AM(S)1 ARM(32')LUM	INS TRF SIG PL AM(S)1 ARM(40')LUM	INS TRF SIG PL AM(S)1 ARM(44')LUM	PED POLE ASSEMBLY
TRF ID	TABLE	EA	EA	EA	EA	EA	EA
PED POLE A	POLE						1
PED POLE B	POLE						1
PED POLE C	POLE						1
PED POLE D	POLE						1
PED POLE E	POLE						1
PED POLE F	POLE						1
TRAFFIC SIGNAL POLE A	POLE	1					
TRAFFIC SIGNAL POLE B	POLE		1				
TRAFFIC SIGNAL POLE C	POLE					1	
TRAFFIC SIGNAL POLE D	POLE				1		
TRAFFIC SIGNAL POLE E	POLE			1			
Grand Total		1	1	1	1	1	6

PROJECT	US 84 (0055-15-072)			
SHEET	303			
		PED POLE FND	416 6031	416 6032
		FOR CONTRACTOR INFO ONLY	DRILL SHAFT (TRF SIG POLE) (30 IN)	DRILL SHAFT (TRF SIG POLE) (36 IN)
TRF ID	TABLE	LF	LF	LF
PED POLE FND A	FOUNDATIONS	5.7		
PED POLE FND B	FOUNDATIONS	5.7		
PED POLE FND C	FOUNDATIONS	5.7		
PED POLE FND D	FOUNDATIONS	5.7		
PED POLE FND E	FOUNDATIONS	5.7		
PED POLE FND F	FOUNDATIONS	5.7		
SIGNAL POLE FND A	FOUNDATIONS		11.3	
SIGNAL POLE FND B	FOUNDATIONS		11.3	
SIGNAL POLE FND C	FOUNDATIONS			13.2
SIGNAL POLE FND D	FOUNDATIONS			13.2
SIGNAL POLE FND E	FOUNDATIONS		11.3	
Grand Total		34.2	33.9	26.4

FILENAME: pw:\\kh-pw.bentley.com:kh-pw-01\Documents\01 Active Projects\TX-FTW-063586010 - US 84 (Waco Drive)\WAC 005515072\4 - Design\Plan Set\8. Traffic\US84_SIGSUM01_N12TH.dgn
PLOTTED: 12/21/2020

STATE OF TEXAS · SCOTT A. ARNOLD · 96782 · LICENSED · PROFESSIONAL ENGINEER

Scott A. Arnold, P.E.

03/01/2021

Kimley»Horn F-928

© 2021

Texas Department of Transportation

TRAFFIC SIGNAL SUMMARY

AT N. 12TH STREET

SHEET 5 OF 5

FED.RD. DIV.NO.	PROJECT ID.	HIGHWAY NO.
6	(SEE TITLE SHEET)	US 84

STATE	DIST.	COUNTY	SHEET NO.
TEXAS	WAC	MCLENNAN	303
CONT.	SECT.	JOB	
0055	15	072	

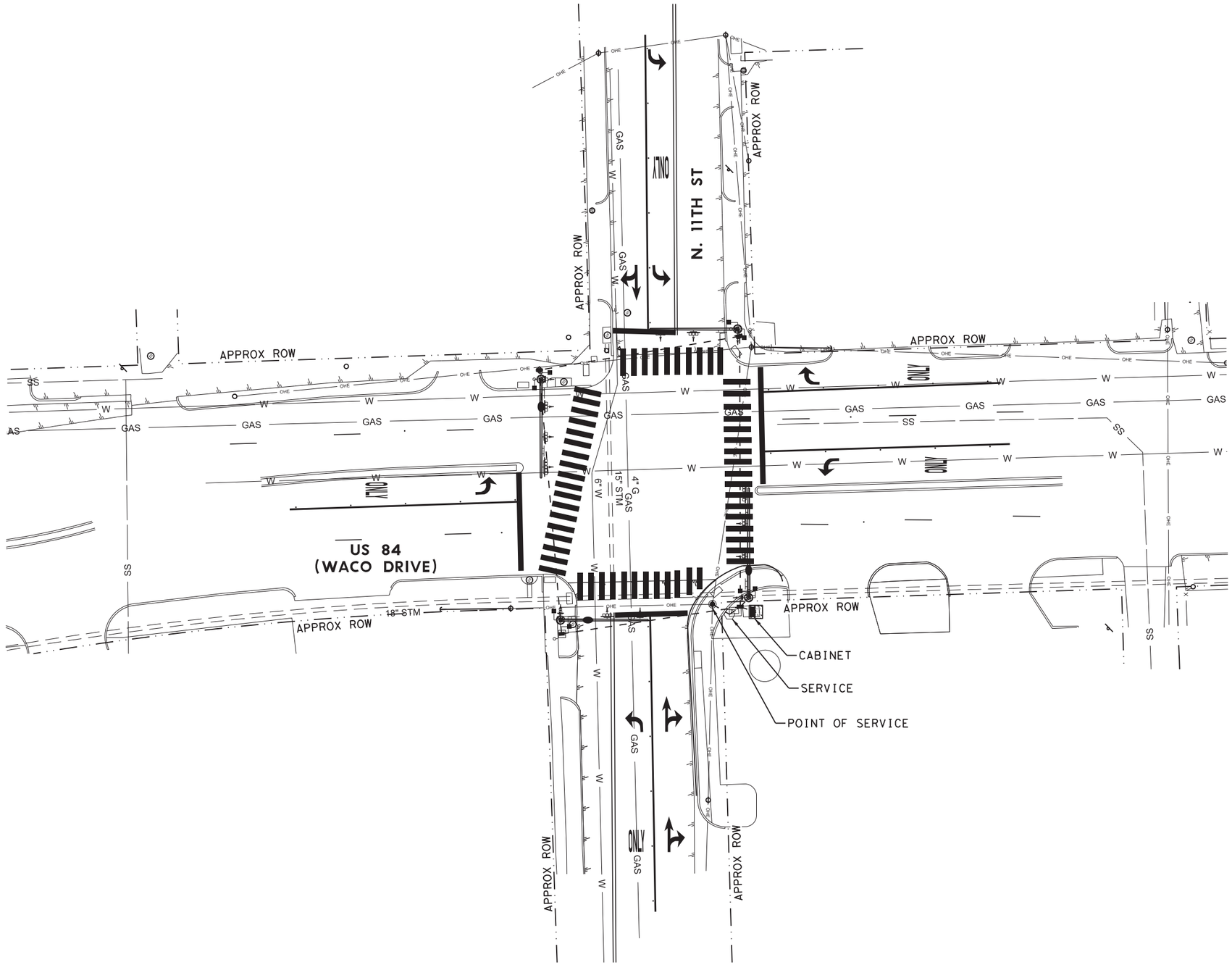

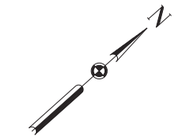

LEGEND

- POINT OF SERVICE
- ELECTRICAL SERVICE
- CONDUIT, PVC
- GROUND BOX

NOTES

1. THE LOCATIONS SHOWN AS EXISTING CONDUIT RUNS ARE APPROXIMATE. THE EXACT LOCATION WILL BE DETERMINED IN THE FIELD. NO EXISTING CONDUIT WILL BE USED, SEE PROPOSED TRAFFIC SIGNAL SHEETS.

STATE OF TEXAS
SCOTT R. ARNOLD
96782
LICENSED
PROFESSIONAL ENGINEER

Scott R. Arnold, P.E.
12/21/2020

Kimley»Horn
F-928

© 2021
Texas Department of Transportation

CONDITION DIAGRAM

AT N. 11TH STREET

SHEET 1 OF 5

FED. RD. DIV. NO.	PROJECT ID.		HIGHWAY NO.
6	(SEE TITLE SHEET)		US 84
STATE	DIST.	COUNTY	SHEET NO.
TEXAS	WAC	MCLENNAN	304
CONT.	SECT.	JOB	
0055	15	072	

FILENAME: pw:\\kh-pw.bentley.com:kh-pw-01\Documents\01 Active Projects\TX-FTW-063586010 - US 84 (Waco Drive)\WAC 005515072\4 - Design\Plan Set\8. Traffic\US84_EXCON_N11TH.dgn
PLOTTED: 12/21/2020

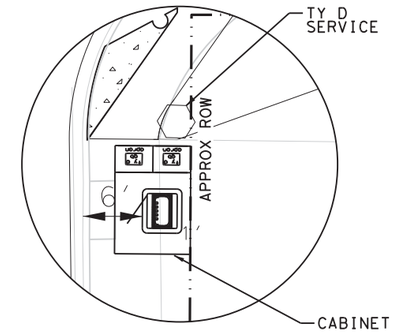

DETAIL B
SE CORNER
US 84 AT N. 11TH STREET
NTS

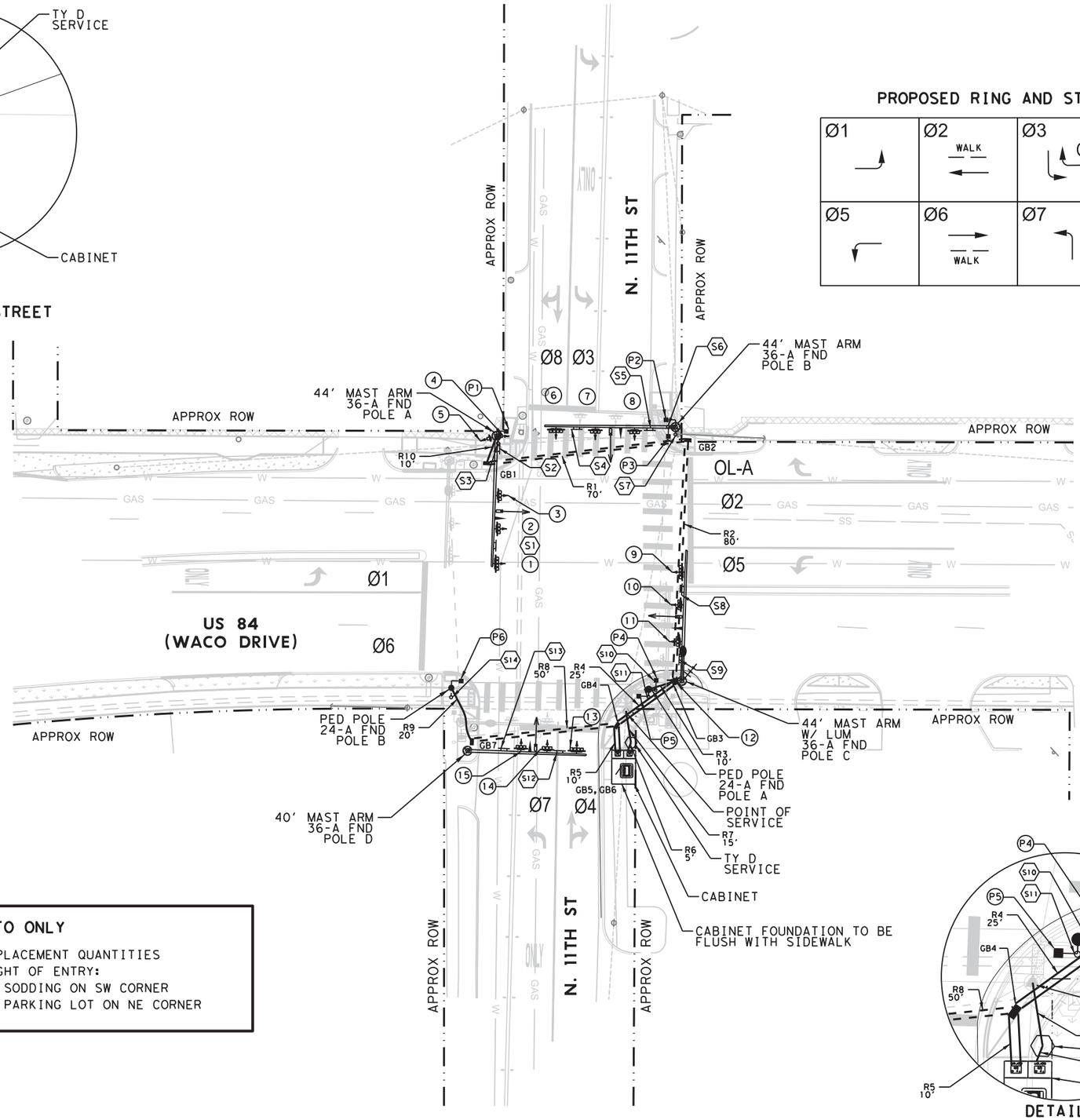

PROPOSED RING AND STRUCTURE

Ø1	Ø2 WALK	Ø3 OL-A	Ø4 WALK
Ø5	Ø6 WALK	Ø7	Ø8 WALK

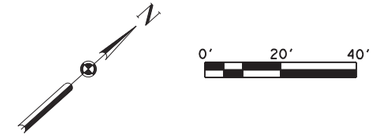

LEGEND

- EXISTING POINT OF SERVICE
- PROPOSED ELECTRICAL SERVICE
- PROPOSED CONDUIT, PVC
- PROPOSED CONDUIT, BORE
- PROPOSED VIVDS
- PROPOSED GROUND BOX (TY D)
- PROPOSED LED COUNTDOWN & APS
- PROPOSED LUMINAIRE
- PROPOSED SIGNAL POLE ASSEMBLY
- PROPOSED OPTICOM DETECTOR (INSTALL ONLY)
- PROPOSED ITS RADIO ANTENNA
- PROPOSED SIGNAL CABINET

NOTES:

1. SHORT RUNS FROM THE GROUND BOXES TO THE SIGNAL / PEDESTRIAN FOUNDATIONS WILL NOT BE PAID DIRECTLY, BUT SUBSIDIARY TO VARIOUS BID ITEMS. FOR THE SIGNAL POLES, THIS WILL BE 2 (3") CONDUITS.
2. INSTALL TRAFFIC SIGNAL CONTROLLER FOUNDATION PER TS-CF DETAIL.
3. ALL ROAD BORES TO BE (2) 3" SCH 80.

CONTRACTOR'S INFO ONLY

BORE PIT REMOVAL/REPLACEMENT QUANTITIES
WITHIN TEMPORARY RIGHT OF ENTRY:
- *25 SF OF BLOCK SODDING ON SW CORNER
- *25 SF CONCRETE PARKING LOT ON NE CORNER

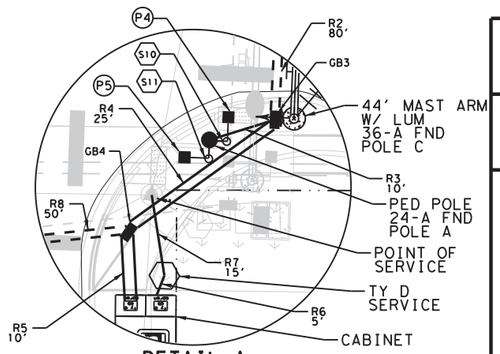

DETAIL A
SE CORNER
US 84 AT N. 11TH STREET
NTS

ELECTRICAL SERVICE DATA

Electrical Service ID	Plan Sheet Number	Electrical Service Description	Service Conduit Size	Service Conductors No./Size	Safety Switch Amps	Main Ckt. Bkr. Pole/Amps	Two-Pole Contactor Amps	Panelbed/ Loadcenter Amp Rating	Branch Circuit ID	Branch Ckt. Bkr. Pole/Amps	Branch Circuit Amps	KVA Load
ES-16	305	ELEC SRV TY D 120/240 060 (NS)SS(E)PS(U)	2"	3/#6	N/A	2P/60	30	100	Sig. Controller	1P/30	36.7	5.0
									Luminaires	2P/15	2.3	

Scott R. Arnold, P.E.
03/01/2021

Kimley»Horn F-928

© 2021

Texas Department of Transportation

PROPOSED TRAFFIC SIGNAL

AT N. 11TH STREET

SHEET 2 OF 5

FED.RD. DIV.NO.	PROJECT ID.	HIGHWAY NO.
6	(SEE TITLE SHEET)	US 84

STATE	DIST.	COUNTY	SHEET NO.
TEXAS	WAC	MCLENNAN	305
CONT.	SECT.	JOB	
0055	15	072	

FILENAME: pw:\\kh-pw.bentley.com:kh-pw-01\Documents\01 Active Projects\TX-FTW-063586010 - US 84 (Waco Drive)\WAC 005515072\4 - Design\Plan Set\8. Traffic\US84_SIG01_N11TH.dgn
PLOTTED: 12/21/2020

SIGNAL WIRING DETAIL

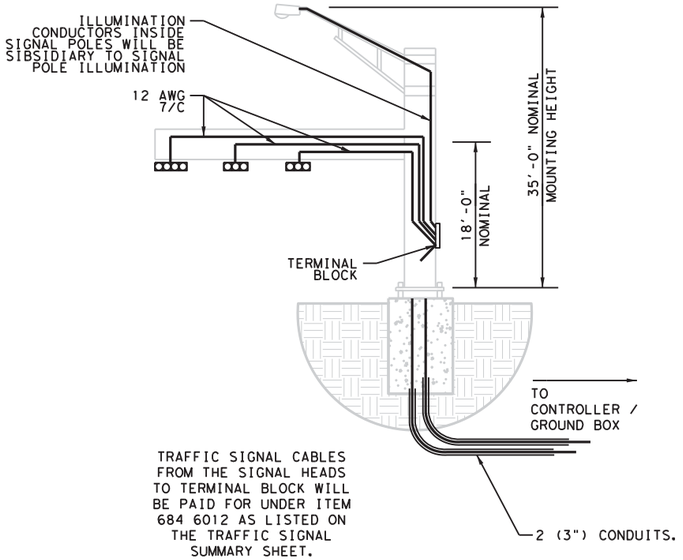

TRAFFIC SIGNAL CABLES FROM THE SIGNAL HEADS TO TERMINAL BLOCK WILL BE PAID FOR UNDER ITEM 684 6012 AS LISTED ON THE TRAFFIC SIGNAL SUMMARY SHEET.

EACH SIGNAL HEAD WILL BE WIRED TO TERMINAL BLOCK.

SIGNAL HEADS

PED SIGNAL HEADS P1, P2, P3, P4, P5, P6

SIGNAL HEADS #1, 6, 9, 13

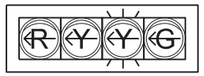

SIGNAL HEADS #2, 3, 7, 8, 10, 11, 14, 15

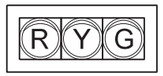

SIGNAL HEADS #5, 12

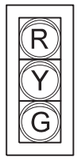

SIGNAL HEAD #4

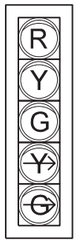

NOTES:

1. TY A SIGNS MOUNTED ON SIGNAL EQUIPMENT IS SHOWN FOR CONTRACTOR INFORMATION ONLY AND SUBSIDIARY TO ITEM 680 6002.

SIGNS

S3 S6 S10 S14

R10-3E(R)

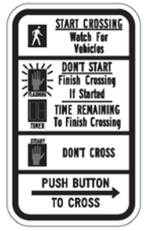

9" X 15" TY A ALUM (0.94 SQ FT) EACH

S7 S11

R10-3E(L)

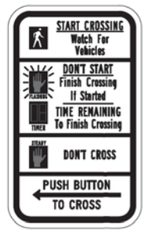

9" X 15" TY A ALUM (0.94 SQ FT) EACH

S1 S4 S8 S12

R10-17T

36" X 42" TY A ALUM (10.5 SQ FT) EACH

S2

D3-1G

54" X 18" TY A ALUM (6.75 SQ FT) EACH

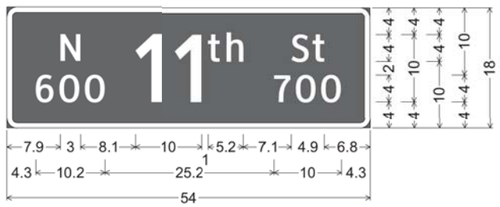

D3-1G;
1.5" Radius, 0.8" Border, White on, Green;
"N", ClearviewHwy-3-W; "600", ClearviewHwy-3-W;
"11", ClearviewHwy-3-W; "th", ClearviewHwy-3-W;
"St", ClearviewHwy-3-W; "700", ClearviewHwy-3-W;

S9

D3-1G

54" X 18" TY A ALUM (6.75 SQ FT) EACH

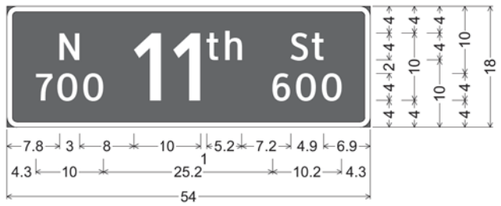

D3-1G;
1.5" Radius, 0.8" Border, White on, Green;
"N", ClearviewHwy-3-W; "700", ClearviewHwy-3-W;
"11", ClearviewHwy-3-W; "th", ClearviewHwy-3-W;
"St", ClearviewHwy-3-W; "600", ClearviewHwy-3-W;

S5

D3-1G

84" X 18" TY A ALUM (10.5 SQ FT) EACH

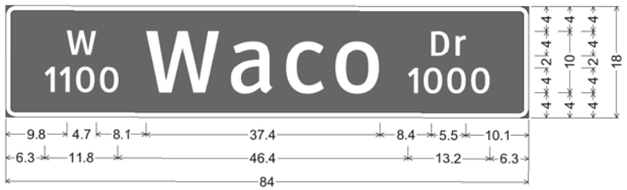

D3-1G;
1.5" Radius, 0.8" Border, White on, Green;
"W", ClearviewHwy-3-W; "1100", ClearviewHwy-3-W; "Waco", ClearviewHwy-3-W;
"Dr", ClearviewHwy-3-W; "1000", ClearviewHwy-3-W;

S13

D3-1G

84" X 18" TY A ALUM (10.5 SQ FT) EACH

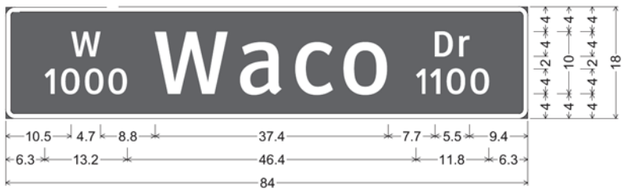

D3-1G;
1.5" Radius, 0.8" Border, White on, Green;
"W", ClearviewHwy-3-W; "1000", ClearviewHwy-3-W; "Waco", ClearviewHwy-3-W;
"Dr", ClearviewHwy-3-W; "1000", ClearviewHwy-3-W;

STATE OF TEXAS — SCOTT R. ARNOLD — 96782 — LICENSED — PROFESSIONAL ENGINEER

Scott R. Arnold, P.E.

12/21/2020

Kimley»Horn F-928

© 2021

Texas Department of Transportation

TRAFFIC SIGNAL SIGNS AND HEADS

AT N. 11TH STREET

SHEET 3 OF 5

FED. RD. DIV. NO.	PROJECT ID.		HIGHWAY NO.
6	(SEE TITLE SHEET)		US 84
STATE	DIST.	COUNTY	SHEET NO.
TEXAS	WAC	MCLENNAN	306
CONT.	SECT.	JOB	
0055	15	072	

FILENAME: pw:\\kh-pw.bentley.com:kh-pw-01\Documents\01 Active Projects\TX-FTW-063586010 - US 84 (Waco Drive)\WAC 005515072\4 - Design\Plan Set\8. Traffic\US84_SIGSIGN01_N11TH.dgn
PLOTTED: 12/21/2020

PROJECT	US 84 (0055-15-072)
SHEET	307

			618 6046	618 6029	618 6054	620 6007	620 6008	620 6009	620 6010	684 6007	684 6012	684 6021	684 6049	6306 6007	OPTICOM CABLE	ITS RADIO CABLE
			CONDT (PVC) (SCH 80) (2")	CONDT (PVC) (SCH 40) (3")	CONDT (PVC) (SCH 80) (3") (BORE)	ELEC CONDR (NO.8) BARE	ELEC CONDR (NO.8) INSULATED	ELEC CONDR (NO.6) BARE	ELEC CONDR (NO.6) INSULATED	TRF SIG CBL (TY A)(12 AWG)(2 CONDR)	TRF SIG CBL (TY A)(12 AWG)(7 CONDR)	TRF SIG CBL (TY A)(12 AWG)(16 CONDR)	TRF SIG CBL (TY A)(16 AWG)(3 CONDR)	VIVDS CABLING	FOR CONTRACTOR INFO ONLY	FOR CONTRACTOR INFO ONLY
TRF ID	TABLE	Locaton	LF	LF	LF	LF	LF	LF	LF	LF	LF	LF	LF	LF	LF	LF
CONDUIT R01-1	CONDUIT	BORE			70	70				70		70		70	70	
CONDUIT R01-2	CONDUIT	BORE			70	70										
CONDUIT R02-1	CONDUIT	BORE			80	80				240		160		160	160	
CONDUIT R02-2	CONDUIT	BORE			80	80										
CONDUIT R03	CONDUIT	TRENCH		10		10				20			20			
CONDUIT R04-1	CONDUIT	TRENCH		25		25	50			125		75	50	75	75	25
CONDUIT R04-2	CONDUIT	TRENCH		25		25										
CONDUIT R05-1	CONDUIT	TRENCH		10		10	20			60		40	30	40	40	10
CONDUIT R05-2	CONDUIT	TRENCH		10		10										
CONDUIT R06	CONDUIT	TRENCH		5			10	5	10							
CONDUIT R07*	CONDUIT	TRENCH	15													
CONDUIT R08-1	CONDUIT	BORE			50	50				50		50	50	50	50	
CONDUIT R08-2	CONDUIT	BORE			50	50										
CONDUIT R09	CONDUIT	TRENCH		20		20				20			20			
CONDUIT R10	CONDUIT	TRENCH		10		10				10		10		10	10	
PED POLE A	CONDUIT	IN PED POLE								10			20			
PED POLE B	CONDUIT	IN PED POLE								5			10			
SIGNAL POLE A	CONDUIT	IN SIGNAL POLE								5	200		10	45	50	
SIGNAL POLE B	CONDUIT	IN SIGNAL POLE								10	145		20	45	40	
SIGNAL POLE C	CONDUIT	IN SIGNAL POLE									160			45	40	30
SIGNAL POLE D	CONDUIT	IN SIGNAL POLE									150			50	45	
Grand Total			15	115	400	510	80	5	10	625	655	405	230	590	580	65

*CONDUIT RUN 7 SHALL INCLUDE A SWEEPING 90° PVC AND SHALL STUB UP AT BOTTOM OF ONCOR POLE.

FILENAME: pw:\\kh-pw.bentley.com:kh-pw-01\Documents\01 Active Projects\TX-FTW-063586010 - US 84 (Waco Drive)\WAC 0055150724 - Design\Plan Set\8. Traffic\US84_CONSUM01_N11TH.dgn
PLOTTED: 12/21/2020

Scott R. Arnold, P.E.

12/21/2020

Kimley»Horn F-928

© 2021

Texas Department of Transportation

CONDUIT AND CONDUCTOR SUMMARY

AT N. 11TH STREET

SHEET 4 OF 5

FED.RD. DIV.NO.	PROJECT ID.	HIGHWAY NO.
6	(SEE TITLE SHEET)	US 84

STATE	DIST.	COUNTY	SHEET NO.
TEXAS	WAC	MCLENNAN	307
CONT.	SECT.	JOB	
0055	15	072	

PROJECT	US 84 (0055-15-072)												
SHEET	308												
		624 6010	628 6144	680 6002	680 6004	682 6018	688 6001	688 6003	6062 6038	6306 6001	6306 6002	CABINET	OPTICOM	TY A SIGN
		GROUND BOX TY D (162922)W/APRON	ELC SRV TY D 120/240 060(NS)SS(E)PS(U)	INSTALL HWY TRF SIG (ISOLATED)	REMOVING TRAFFIC SIGNALS	PED SIG SEC (LED)(COUNTDOWN)	PED DETECT PUSH BUTTON (APS)	PED DETECTOR CONTROLLER UNIT	ITS RADIO (DUAL)(5 GHZ/5 GHZ)-C-U	VIVDS PROSR SYS	VIVDS CAM ASSY FXD LNS	TxDOT CABINET AND CONTROLLER	FOR CONTRACTOR INFO ONLY	FOR CONTRACTOR INFO ONLY
TRF ID	TABLE	EA	EA	EA	EA	EA	EA	EA	EA	EA	EA	EA	EA	SF
CABINET	MISCELLANEOUS											1		
GROUND BOX	MISCELLANEOUS	7												
ITS RADIO	MISCELLANEOUS								1					
OPTICOM	MISCELLANEOUS												4	
P1	MISCELLANEOUS					1								
P2	MISCELLANEOUS					1								
P3	MISCELLANEOUS					1								
P4	MISCELLANEOUS					1								
P5	MISCELLANEOUS					1								
P6	MISCELLANEOUS					1								
PED	MISCELLANEOUS						6	1						
SERVICE	MISCELLANEOUS		1											
SIGN	MISCELLANEOUS													83
SIGNAL	MISCELLANEOUS			1	1									
VIVDS	MISCELLANEOUS									1	4			
Grand Total		7	1	1	1	6	6	1	1	1	4	1	4	83

PROJECT	US 84 (0055-15-072)									
SHEET	308									
		682 6001	682 6002	682 6003	682 6004	682 6005	682 6006	682 6054	682 6055	682 6056
		VEH SIG SEC (12")LED(GRN)	VEH SIG SEC (12")LED(GRN ARW)	VEH SIG SEC (12")LED(YEL)	VEH SIG SEC (12")LED(YEL ARW)	VEH SIG SEC (12")LED(RED)	VEH SIG SEC (12")LED(RED ARW)	BACKPLATE W/REF BRDR(3 SEC)(VENT)ALUM	BACKPLATE W/REF BRDR(4 SEC)(VENT)ALUM	BACKPLATE W/REF BRDR(5 SEC)(VENT)ALUM
TRF ID	TABLE	EA	EA	EA	EA	EA	EA	EA	EA	EA
SIGNAL HEAD 01	SIGNAL HEAD		1		2		1		1	
SIGNAL HEAD 02	SIGNAL HEAD	1		1		1		1		
SIGNAL HEAD 03	SIGNAL HEAD	1		1		1		1		
SIGNAL HEAD 04	SIGNAL HEAD	1	1	1	1	1				1
SIGNAL HEAD 05	SIGNAL HEAD	1		1		1		1		
SIGNAL HEAD 06	SIGNAL HEAD		1		2		1		1	
SIGNAL HEAD 07	SIGNAL HEAD	1		1		1		1		
SIGNAL HEAD 08	SIGNAL HEAD	1		1		1		1		
SIGNAL HEAD 09	SIGNAL HEAD		1		2		1		1	
SIGNAL HEAD 10	SIGNAL HEAD	1		1		1		1		
SIGNAL HEAD 11	SIGNAL HEAD	1		1		1		1		
SIGNAL HEAD 12	SIGNAL HEAD	1		1		1		1		
SIGNAL HEAD 13	SIGNAL HEAD		1		2		1		1	
SIGNAL HEAD 14	SIGNAL HEAD	1		1		1		1		
SIGNAL HEAD 15	SIGNAL HEAD	1		1		1		1		
Grand Total		11	5	11	9	11	4	10	4	1

PROJECT	US 84 (0055-15-072)				
SHEET	308				
		686 6041	686 6045	686 6047	687 6001
		INS TRF SIG PL AM(S)1 ARM(40')	INS TRF SIG PL AM(S)1 ARM(44')	INS TRF SIG PL AM(S)1 ARM(44')LUM	PED POLE ASSEMBLY
TRF ID	TABLE	EA	EA	EA	EA
PED POLE A	POLE				1
PED POLE B	POLE				1
TRAFFIC SIGNAL POLE A	POLE		1		
TRAFFIC SIGNAL POLE B	POLE		1		
TRAFFIC SIGNAL POLE C	POLE			1	
TRAFFIC SIGNAL POLE D	POLE	1			
Grand Total		1	2	1	2

PROJECT	US 84 (0055-15-072)		
SHEET	308		
		PED POLE FND	416 6032
		FOR CONTRACTOR INFO ONLY	DRILL SHAFT (TRF SIG POLE) (36 IN)
TRF ID	TABLE	LF	LF
PED POLE FND A	FOUNDATIONS	5.7	
PED POLE FND B	FOUNDATIONS	5.7	
SIGNAL POLE FND A	FOUNDATIONS		13.2
SIGNAL POLE FND B	FOUNDATIONS		13.2
SIGNAL POLE FND C	FOUNDATIONS		13.2
SIGNAL POLE FND D	FOUNDATIONS		13.2
Grand Total		11.4	52.8

Scott R. Arnold, P.E.

12/21/2020

Kimley»Horn F-928

© 2021

Texas Department of Transportation

TRAFFIC SIGNAL SUMMARY

AT N. 11TH STREET

SHEET 5 OF 5

FED.RD. DIV.NO.	PROJECT ID.	HIGHWAY NO.
6	(SEE TITLE SHEET)	US 84

STATE	DIST.	COUNTY	SHEET NO.
TEXAS	WAC	MCLENNAN	308
CONT.	SECT.	JOB	
0055	15	072	

FILENAME: pw:\\kh-pw.bentley.com:kh-pw-01\Documents\01 Active Projects\TX-FTW-063586010 - US 84 (Waco Drive)\WAC 005515072\4 - Design\Plan Set\8. Traffic\US84_SIGSUM01_N11TH.dgn
PLOTTED: 12/21/2020

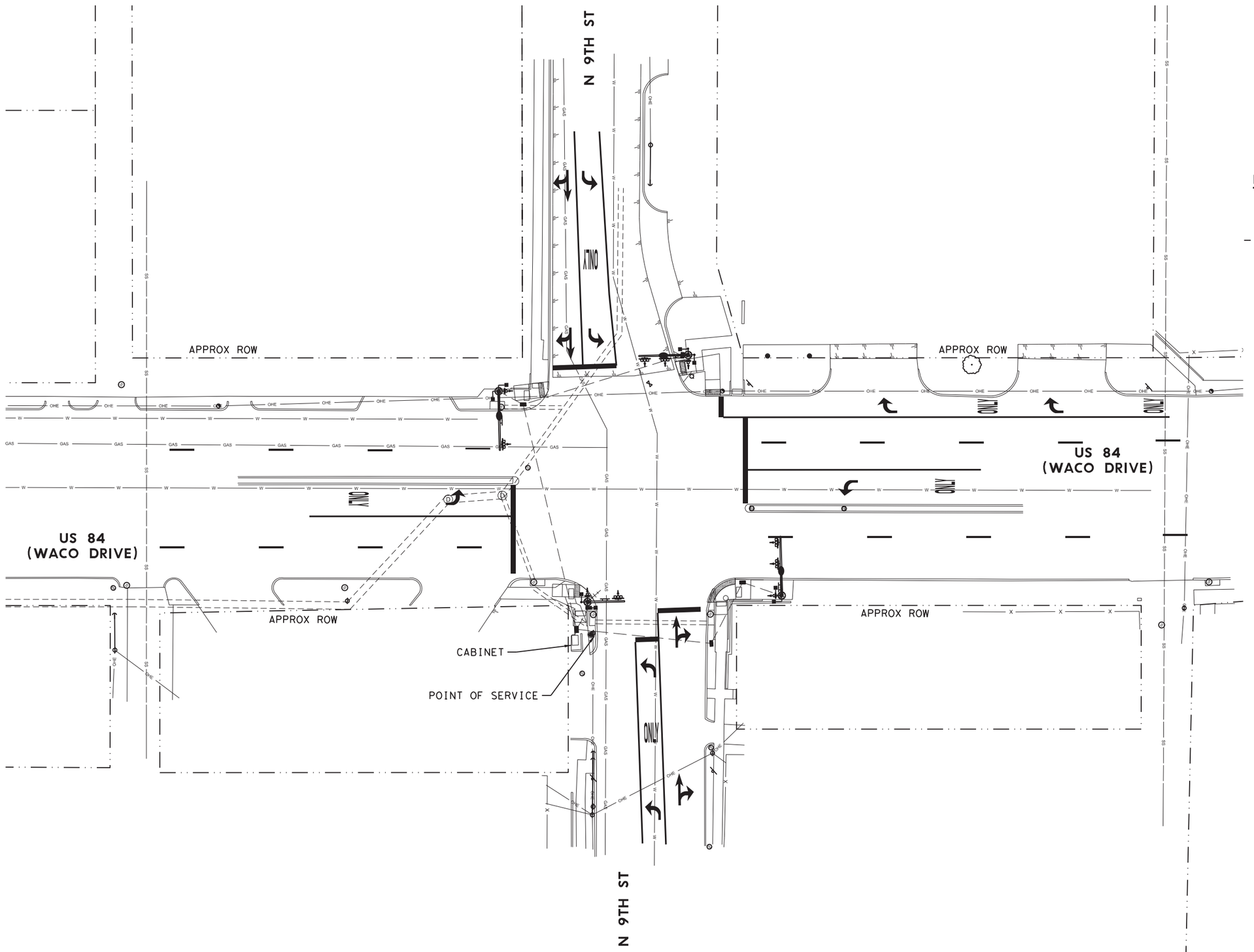

N

0' 20' 40'

LEGEND

- POINT OF SERVICE
- ELECTRICAL SERVICE
- CONDUIT, PVC
- GROUND BOX

NOTES

1. THE LOCATIONS SHOWN AS EXISTING CONDUIT RUNS ARE APPROXIMATE. THE EXACT LOCATION WILL BE DETERMINED IN THE FIELD. NO EXISTING CONDUIT WILL BE USED, SEE PROPOSED TRAFFIC SIGNAL SHEETS.

STATE OF TEXAS
SCOTT ARNOLD
96782
LICENSED
PROFESSIONAL ENGINEER

Scott R. Arnold, P.E.
12/21/2020

Kimley»Horn F-928

© 2021

Texas Department of Transportation

CONDITION DIAGRAM

AT N. 9TH STREET

SHEET 1 OF 5

FED.RD. DIV.NO.	PROJECT ID.	HIGHWAY NO.
6	(SEE TITLE SHEET)	US 84

STATE	DIST.	COUNTY	SHEET NO.
TEXAS	WAC	MCLENNAN	309
CONT.	SECT.	JOB	
0055	15	072	

FILENAME: pw:\\kh-pw.bentley.com:kh-pw-01\Documents\01 Active Projects\TX-FTW-063586010 - US 84 (Waco Drive)\WAC 0055150724 - Design\Plan Set\8. Traffic\US84_EXCON_N9TH.dgn
PLOTTED: 12/21/2020

DETAIL A
NW CORNER
US 84 AT N. 9TH STREET
NTS

PROPOSED RING AND STRUCTURE

Ø1	Ø2 WALK	Ø3 OL-A	Ø4
Ø5	Ø6 WALK	Ø7	Ø8 WALK

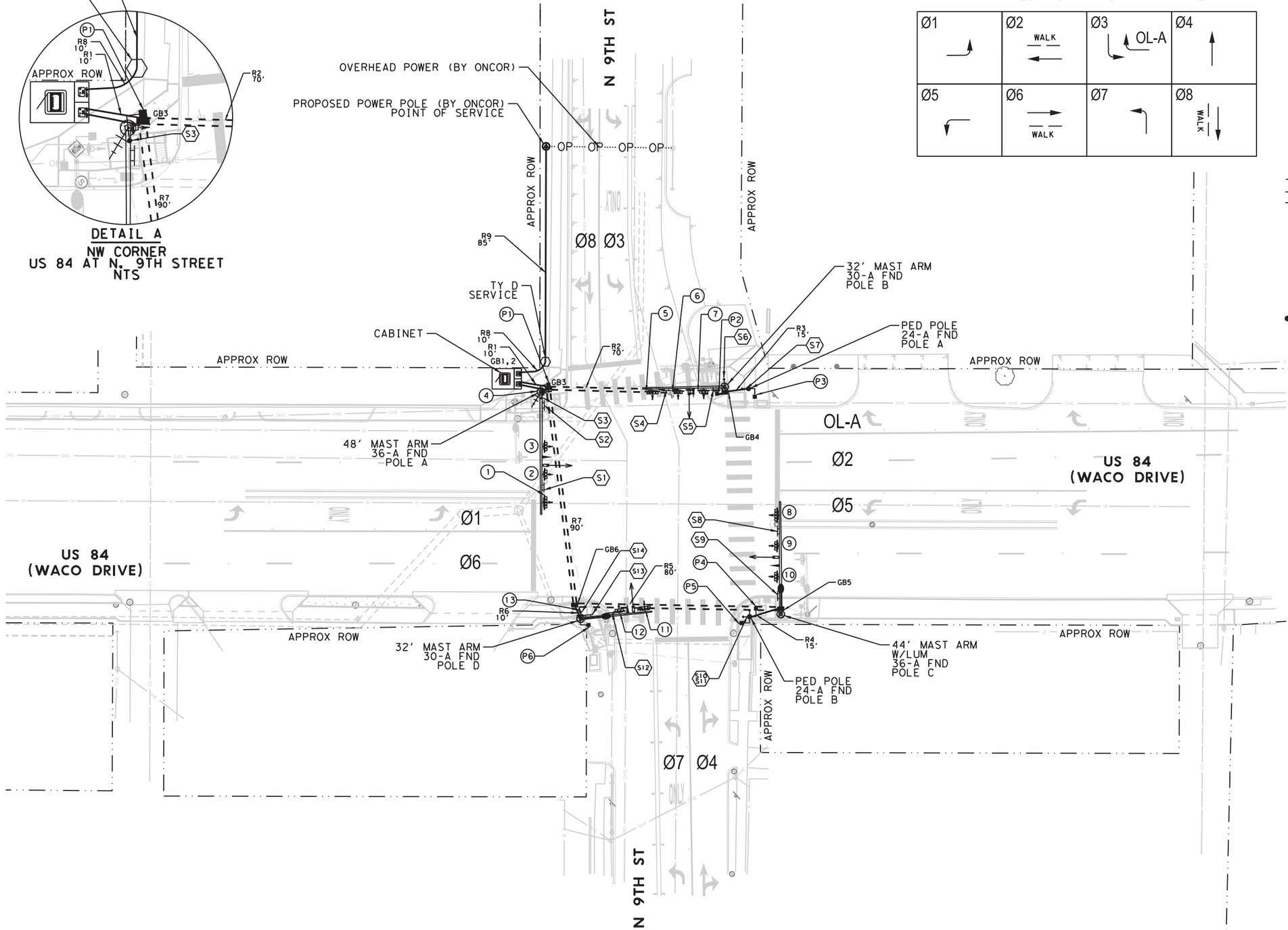

LEGEND

- PROPOSED POINT OF SERVICE
- PROPOSED ELECTRICAL SERVICE
- PROPOSED CONDUIT, PVC
- PROPOSED CONDUIT, BORE
- PROPOSED VIVDS
- PROPOSED GROUND BOX (TY D)
- PROPOSED LED COUNTDOWN & APS
- PROPOSED LUMINAIRE
- PROPOSED SIGNAL POLE ASSEMBLY
- PROPOSED OPTICOM DETECTOR (INSTALL ONLY)
- PROPOSED ITS RADIO ANTENNA
- PROPOSED SIGNAL CABINET

NOTES:

1. SHORT RUNS FROM THE GROUND BOXES TO THE SIGNAL / PEDESTRIAN FOUNDATIONS WILL NOT BE PAID DIRECTLY, BUT SUBSIDIARY TO VARIOUS BID ITEMS. FOR THE SIGNAL POLES, THIS WILL BE 2 (3") CONDUITS.
2. INSTALL TRAFFIC SIGNAL CONTROLLER FOUNDATION PER TS-CF DETAIL.
3. ALL ROAD BORES TO BE (2) 3" SCH 80.

ELECTRICAL SERVICE DATA

Electrical Service ID	Plan Sheet Number	Electrical Service Description	Service Conduit Size	Service Conductors No./Size	Safety Switch Amps	Main Ckt. Bkr. Pole/Amps	Two-Pole Contactor Amps	Panelbed/ Loadcenter Amp Rating	Branch Circuit ID	Branch Ckt. Bkr. Pole/Amps	Branch Circuit Amps	KVA Load
ES-17	310	ELEC SRV TY D 120/240 060 (NS)SS(E)PS(U)	2"	3/#6	N/A	2P/60	30	100	Sig. Controller	1P/30	31.4	4.0
									Luminaires	2P/15	2.3	

Scott R. Arnold, P.E.
12/21/2020

Kimley»Horn F-928

© 2021
Texas Department of Transportation

PROPOSED TRAFFIC SIGNAL

AT N. 9TH STREET

SHEET 2 OF 5

FED.RD. DIV.NO.	PROJECT ID.	HIGHWAY NO.
6	(SEE TITLE SHEET)	US 84

STATE	DIST.	COUNTY	SHEET NO.
TEXAS	WAC	MCLENNAN	310
CONT.	SECT.	JOB	
0055	15	072	

FILENAME: pw:\\kh-pw.bentley.com:kh-pw-01\Documents\01 Active Projects\TX-FTW-063586010 - US 84 (Waco Drive)\WAC 005515072\4 - Design\Plan Set\8. Traffic\US84_SIG01_N9TH.dgn
PLOTTED: 12/21/2020

SIGNAL WIRING DETAIL

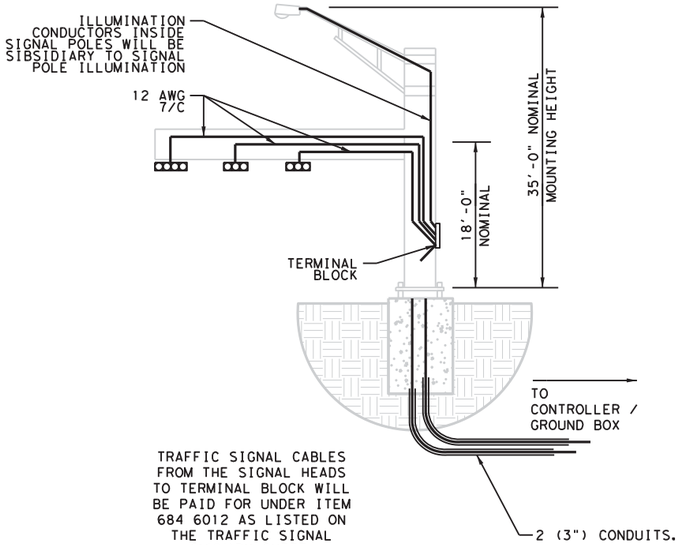

TRAFFIC SIGNAL CABLES FROM THE SIGNAL HEADS TO TERMINAL BLOCK WILL BE PAID FOR UNDER ITEM 684 6012 AS LISTED ON THE TRAFFIC SIGNAL SUMMARY SHEET.

EACH SIGNAL HEAD WILL BE WIRED TO TERMINAL BLOCK.

SIGNAL HEADS

PED SIGNAL HEADS P1, P2, P3, P4, P5, P6

SIGNAL HEADS #1, 5, 8, 11

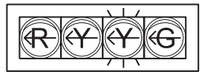

SIGNAL HEADS #2, 3, 6, 7, 9, 10, 12

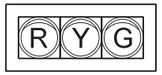

SIGNAL HEAD 13

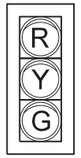

SIGNAL HEAD #4

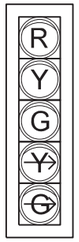

NOTES:

1. TY A SIGNS MOUNTED ON SIGNAL EQUIPMENT IS SHOWN FOR CONTRACTOR INFORMATION ONLY AND SUBSIDIARY TO ITEM 680 6002.

SIGNS

S3 S6 S7 S10

R10-3E(R)

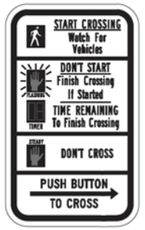

9" X 15" TY A ALUM (0.94 SQ FT) EACH

S11 S14

R10-3E(L)

9" X 15" TY A ALUM (0.94 SQ FT) EACH

S1 S4 S8 S12

R10-5

30" X 36" TY A ALUM (7.5 SQ FT) EACH

S2

D3-1G

84" X 18" TY A ALUM (6.75 SQ FT) EACH

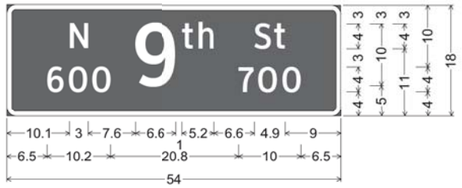

D3-1G;
1.5" Radius, 0.8" Border, White on, Green;
"N", ClearviewHwy-3-W; "600", ClearviewHwy-3-W;
"9", ClearviewHwy-3-W; "th", ClearviewHwy-3-W;
"St", ClearviewHwy-3-W; "700", ClearviewHwy-3-W;

S9

D3-1G

84" X 18" TY A ALUM (6.75 SQ FT) EACH

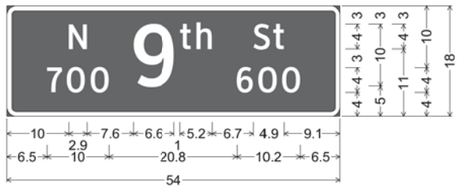

D3-1G;
1.5" Radius, 0.8" Border, White on, Green;
"N", ClearviewHwy-3-W; "700", ClearviewHwy-3-W;
"9", ClearviewHwy-3-W; "th", ClearviewHwy-3-W;
"St", ClearviewHwy-3-W; "600", ClearviewHwy-3-W;

S5

D3-1G

78" X 18" TY A ALUM (9.75 SQ FT) EACH

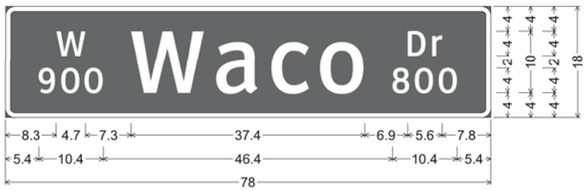

D3-1G;
1.5" Radius, 0.8" Border, White on, Green;
"W", ClearviewHwy-3-W; "900", ClearviewHwy-3-W;
"Waco", ClearviewHwy-3-W; "Dr", ClearviewHwy-3-W;
"800", ClearviewHwy-3-W;

S13

D3-1G

78" X 18" TY A ALUM (9.75 SQ FT) EACH

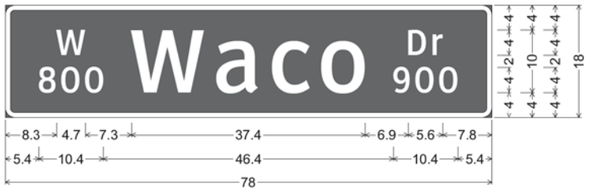

D3-1G;
1.5" Radius, 0.8" Border, White on, Green;
"W", ClearviewHwy-3-W; "800", ClearviewHwy-3-W;
"Waco", ClearviewHwy-3-W; "Dr", ClearviewHwy-3-W;
"900", ClearviewHwy-3-W;

STATE OF TEXAS
SCOTT R ARNOLD
96782
LICENSED PROFESSIONAL ENGINEER

Scott R Arnold, P.E.
12/21/2020

Kimley»Horn F-928

© 2021

Texas Department of Transportation

TRAFFIC SIGNAL SIGNS AND HEADS

AT N. 9TH STREET

SHEET 3 OF 5

FED.RD. DIV.NO.	PROJECT ID.	HIGHWAY NO.
6	(SEE TITLE SHEET)	US 84

STATE	DIST.	COUNTY	SHEET NO.
TEXAS	WAC	MCLENNAN	
CONT.	SECT.	JOB	311
0055	15	072	

FILENAME: pw:\\kh-pw.bentley.com:kh-pw-01\Documents\01 Active Projects\TX-FTW-063586010 - US 84 (Waco Drive)\WAC 0055150721 - Design\Plan Set\8. Traffic\US84_SIGSIGN01_N9TH.dgn
PLOTTED: 12/21/2020

PROJECT	US 84 (0055-15-072)
SHEET	312

			618 6046	618 6029	618 6054	620 6007	620 6008	620 6009	620 6010	684 6007	684 6012	684 6021	684 6049	6306 6007	OPTICOM CABLE	ITS RADIO CABLE
			CONDT (PVC) (SCH 80) (2")	CONDT (PVC) (SCH 40) (3")	CONDT (PVC) (SCH 80) (3") (BORE)	ELEC CONDR (NO.8) BARE	ELEC CONDR (NO.8) INSULATED	ELEC CONDR (NO.6) BARE	ELEC CONDR (NO.6) INSULATED	TRF SIG CBL (TY A)(12 AWG)(2 CONDR)	TRF SIG CBL (TY A)(12 AWG)(7 CONDR)	TRF SIG CBL (TY A)(12 AWG)(16 CONDR)	TRF SIG CBL (TY A)(16 AWG)(3 CONDR)	VIVDS CABLING	FOR CONTRACTOR INFO ONLY	FOR CONTRACTOR INFO ONLY
TRF ID	TABLE	Location	LF	LF	LF	LF	LF	LF	LF	LF	LF	LF	LF	LF	LF	LF
CONDUIT R01-1	CONDUIT	TRENCH		10		10				60		40	30	40	40	10
CONDUIT R01-2	CONDUIT	TRENCH		10		10										
CONDUIT R02-1	CONDUIT	BORE			70	70				140		70	70	70	70	
CONDUIT R02-2	CONDUIT	BORE			70	70										
CONDUIT R03	CONDUIT	TRENCH		15		15				15			15			
CONDUIT R04	CONDUIT	TRENCH		15		15				30			30			
CONDUIT R05-1	CONDUIT	BORE			80	80	160			160		80	160	80	80	
CONDUIT R05-2	CONDUIT	BORE			80	80										
CONDUIT R06	CONDUIT	TRENCH		10		10				10		10		10	10	
CONDUIT R07-1	CONDUIT	BORE			90	90	180			270		180	180	180	180	
CONDUIT R07-2	CONDUIT	BORE			90	90										
CONDUIT R08	CONDUIT	TRENCH		10			20	10	20							
CONDUIT R09*	CONDUIT	TRENCH	85													
PED POLE A	CONDUIT	IN PED POLE								5						
PED POLE B	CONDUIT	IN PED POLE								10			20			
SIGNAL POLE A	CONDUIT	IN SIGNAL POLE								5	180		10	50	50	30
SIGNAL POLE B	CONDUIT	IN SIGNAL POLE								5	120		10	35	35	
SIGNAL POLE C	CONDUIT	IN SIGNAL POLE									140			45	40	
SIGNAL POLE D	CONDUIT	IN SIGNAL POLE								5	90		10	45	45	
Grand Total			85	70	480	540	360	10	20	715	530	380	535	555	550	40

*CONDUIT RUN 9 SHALL INCLUDE A SWEEPING 90° PVC AND SHALL STUB UP AT BOTTOM OF ONCOR POLE.

FILENAME: pw:\\kh-pw.bentley.com:kh-pw-01\Documents\01 Active Projects\TX-FTW-063586010 - US 84 (Waco Drive)\WAC 005515072\4 - Design\Plan Set\8. Traffic\US84_CONSUM01_N9TH.dgn
PLOTTED: 12/21/2020

Scott R Arnold, P.E.

12/21/2020

Kimley»Horn F-928

© 2021

Texas Department of Transportation

CONDUIT AND CONDUCTOR SUMMARY

AT N. 9TH STREET

SHEET 4 OF 5

FED.RD. DIV.NO.	PROJECT ID.	HIGHWAY NO.
6	(SEE TITLE SHEET)	US 84

STATE	DIST.	COUNTY	SHEET NO.
TEXAS	WAC	MCLENNAN	312
CONT.	SECT.	JOB	
0055	15	072	

PROJECT	US 84 (0055-15-072)												
SHEET	313												
		624 6010	628 6144	680 6002	680 6004	682 6018	688 6001	688 6003	6062 6038	6306 6001	6306 6002	CABINET	OPTICOM	TY A SIGN
		GROUND BOX TY D (162922)W/APRON	ELC SRV TY D 120/240 060(NS)SS(E)PS(U)	INSTALL HWY TRF SIG (ISOLATED)	REMOVING TRAFFIC SIGNALS	PED SIG SEC (LED)(COUNTDOWN)	PED DETECT PUSH BUTTON (APS)	PED DETECTOR CONTROLLER UNIT	ITS RADIO (DUAL)(5 GHZ/5 GHZ)-C-U	VIVDS PROSR SYS	VIVDS CAM ASSY FXD LNS	TxDOT CABINET AND CONTROLLER	FOR CONTRACTOR INFO ONLY	FOR CONTRACTOR INFO ONLY
TRF ID	TABLE	EA	EA	EA	EA	EA	EA	EA	EA	EA	EA	EA	EA	SF
CABINET	MISCELLANEOUS											1		
GROUND BOX	MISCELLANEOUS	6												
ITS RADIO	MISCELLANEOUS								1					
OPTICOM	MISCELLANEOUS												4	
P1	MISCELLANEOUS					1								
P2	MISCELLANEOUS					1								
P3	MISCELLANEOUS					1								
P4	MISCELLANEOUS					1								
P5	MISCELLANEOUS					1								
P6	MISCELLANEOUS					1								
PED	MISCELLANEOUS						6	1						
SERVICE	MISCELLANEOUS		1											
SIGN	MISCELLANEOUS													69
SIGNAL	MISCELLANEOUS			1	1									
VIVDS	MISCELLANEOUS									1	4			
Grand Total		6	1	1	1	6	6	1	1	1	4	1	4	69

PROJECT	US 84 (0055-15-072)									
SHEET	313									
		682 6001	682 6002	682 6003	682 6004	682 6005	682 6006	682 6054	682 6055	682 6056
		VEH SIG SEC (12")LED(GRN)	VEH SIG SEC (12")LED(GRN ARW)	VEH SIG SEC (12")LED(YEL)	VEH SIG SEC (12")LED(YEL ARW)	VEH SIG SEC (12")LED(RED)	VEH SIG SEC (12")LED(RED ARW)	BACKPLATE W/REF BRDR(3 SEC)(VENT)ALUM	BACKPLATE W/REF BRDR(4 SEC)(VENT)ALUM	BACKPLATE W/REF BRDR(5 SEC)(VENT)ALUM
TRF ID	TABLE	EA	EA	EA	EA	EA	EA	EA	EA	EA
SIGNAL HEAD 01	SIGNAL HEAD		1		2		1		1	
SIGNAL HEAD 02	SIGNAL HEAD	1		1		1		1		
SIGNAL HEAD 03	SIGNAL HEAD	1		1		1		1		
SIGNAL HEAD 04	SIGNAL HEAD	1	1	1	1	1				1
SIGNAL HEAD 05	SIGNAL HEAD		1		2		1		1	
SIGNAL HEAD 06	SIGNAL HEAD	1		1		1		1		
SIGNAL HEAD 07	SIGNAL HEAD	1		1		1		1		
SIGNAL HEAD 08	SIGNAL HEAD		1		2		1		1	
SIGNAL HEAD 09	SIGNAL HEAD	1		1		1		1		
SIGNAL HEAD 10	SIGNAL HEAD	1		1		1		1		
SIGNAL HEAD 11	SIGNAL HEAD		1		2		1		1	
SIGNAL HEAD 12	SIGNAL HEAD	1		1		1		1		
SIGNAL HEAD 13	SIGNAL HEAD	1		1		1		1		
Grand Total		9	5	9	9	9	4	8	4	1

PROJECT	US 84 (0055-15-072)					
SHEET	313					
		686 6033	686 6035	686 6047	686 6049	687 6001
		INS TRF SIG PL AM(S)1 ARM(32')	INS TRF SIG PL AM(S)1 ARM(32')LUM	INS TRF SIG PL AM(S)1 ARM(44')LUM	INS TRF SIG PL AM(S)1 ARM(48')	PED POLE ASSEMBLY
TRF ID	TABLE	EA	EA	EA	EA	EA
PED POLE A	POLE					1
PED POLE B	POLE					1
TRAFFIC SIGNAL POLE A	POLE				1	
TRAFFIC SIGNAL POLE B	POLE	1				
TRAFFIC SIGNAL POLE C	POLE			1		
TRAFFIC SIGNAL POLE D	POLE		1			
Grand Total		1	1	1	1	2

PROJECT	US 84 (0055-15-072)			
SHEET	313			
		PED POLE FND	416 6031	416 6032
		FOR CONTRACTOR INFO ONLY	DRILL SHAFT (TRF SIG POLE) (30 IN)	DRILL SHAFT (TRF SIG POLE) (36 IN)
TRF ID	TABLE	LF	LF	LF
PED POLE FND A	FOUNDATIONS	5.7		
PED POLE FND B	FOUNDATIONS	5.7		
SIGNAL POLE FND A	FOUNDATIONS			13.2
SIGNAL POLE FND B	FOUNDATIONS		11.3	
SIGNAL POLE FND C	FOUNDATIONS			13.2
SIGNAL POLE FND D	FOUNDATIONS		11.3	
Grand Total		11.4	22.6	26.4

Scott K. Arnold, P.E.

12/21/2020

Kimley»Horn F-928

© 2021

Texas Department of Transportation

TRAFFIC SIGNAL SUMMARY

AT N. 9TH STREET

SHEET 5 OF 5

FED.RD. DIV.NO.	PROJECT ID.	HIGHWAY NO.
6	(SEE TITLE SHEET)	US 84

STATE	DIST.	COUNTY	SHEET NO.
TEXAS	WAC	MCLENNAN	313
CONT.	SECT.	JOB	
0055	15	072	

FILENAME: pw:\\kh-pw.bentley.com:kh-pw-01\Documents\01 Active Projects\TX-FTW-063586010 - US 84 (Waco Drive)\WAC 005515072\4 - Design\Plan Set\8. Traffic\US84_SIGSUM01_N9TH.dgn
PLOTTED: 12/21/2020

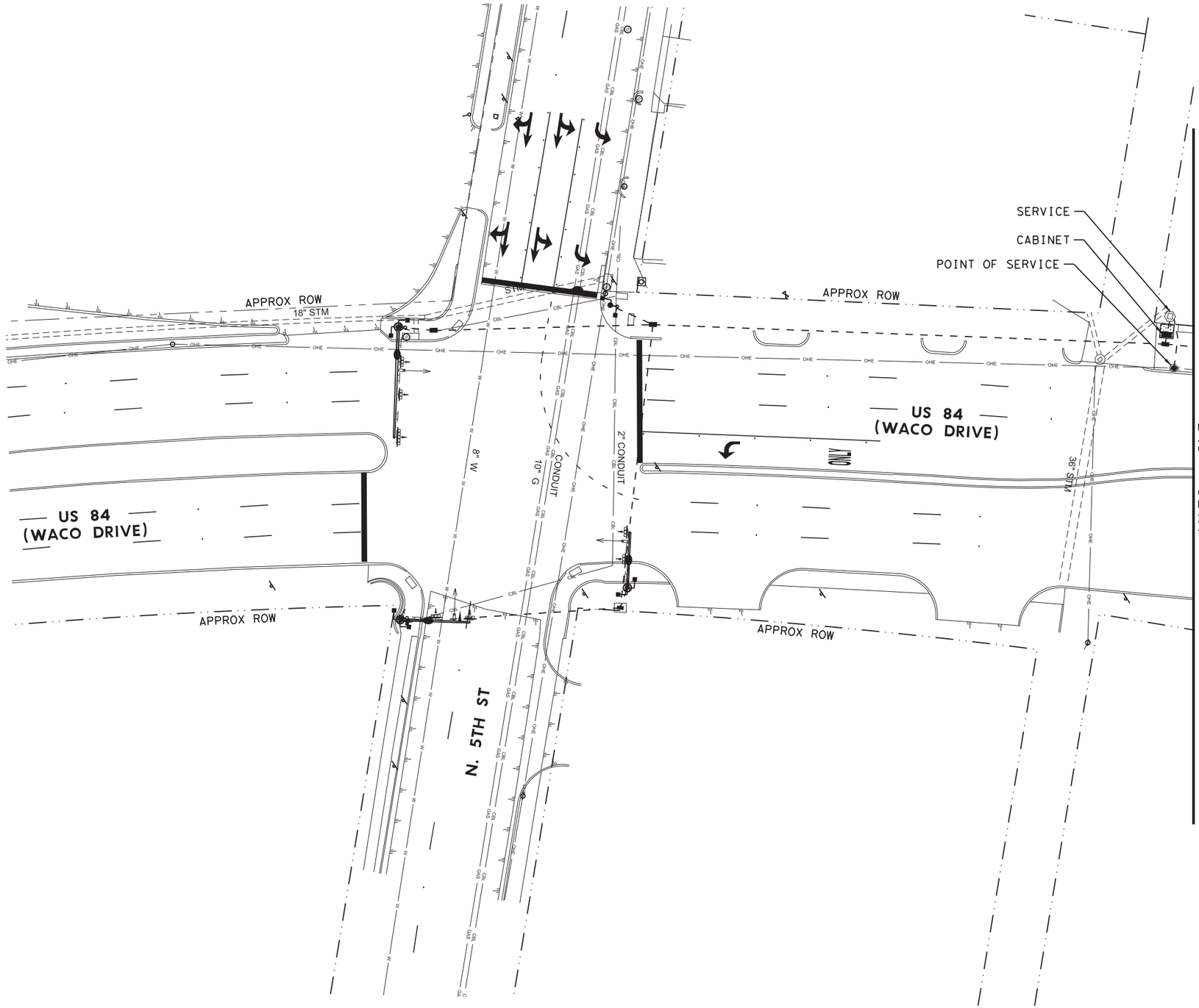

0' 20' 40'

LEGEND

- POINT OF SERVICE
- ELECTRICAL SERVICE
- CONDUIT, PVC
- GROUND BOX

NOTES

1. THE LOCATIONS SHOWN AS EXISTING CONDUIT RUNS ARE APPROXIMATE. THE EXACT LOCATION WILL BE DETERMINED IN THE FIELD. NO EXISTING CONDUIT WILL BE USED, SEE PROPOSED TRAFFIC SIGNAL SHEETS.
2. SEE N. 4TH STREET FOR CONTINUATION OF EXISTING SIGNAL.

STATE OF TEXAS — SCOTT R. ARNOLD — 96782 — LICENSED PROFESSIONAL ENGINEER

Scott R. Arnold, P.E.

12/21/2020

Kimley»Horn F-928

© 2021

Texas Department of Transportation

CONDITION DIAGRAM

AT N. 5TH STREET

SHEET 1 OF 5

FED.RD. DIV.NO.	PROJECT ID.	HIGHWAY NO.
6	(SEE TITLE SHEET)	US 84

STATE	DIST.	COUNTY	SHEET NO.
TEXAS	WAC	MCLENNAN	314
CONT.	SECT.	JOB	
0055	15	072	

FILENAME: pw:\\kh-pw.bentley.com:kh-pw-01\Documents\01 Active Projects\TX-FTW-063586010 - US 84 (Waco Drive)\WAC 005515072\4 - Design\Plan Set\8. Traffic\US84_EXCON_N5TH.dgn
PLOTTED: 12/21/2020

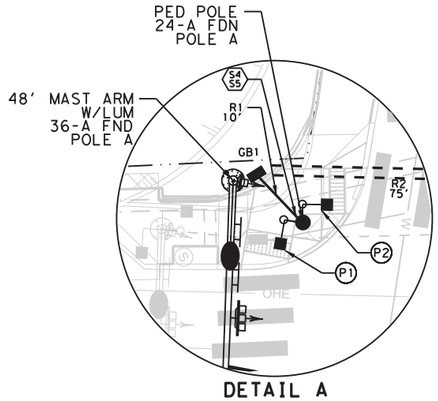

DETAIL A
NW CORNER
US 84 AT N. 5TH STREET
NTS

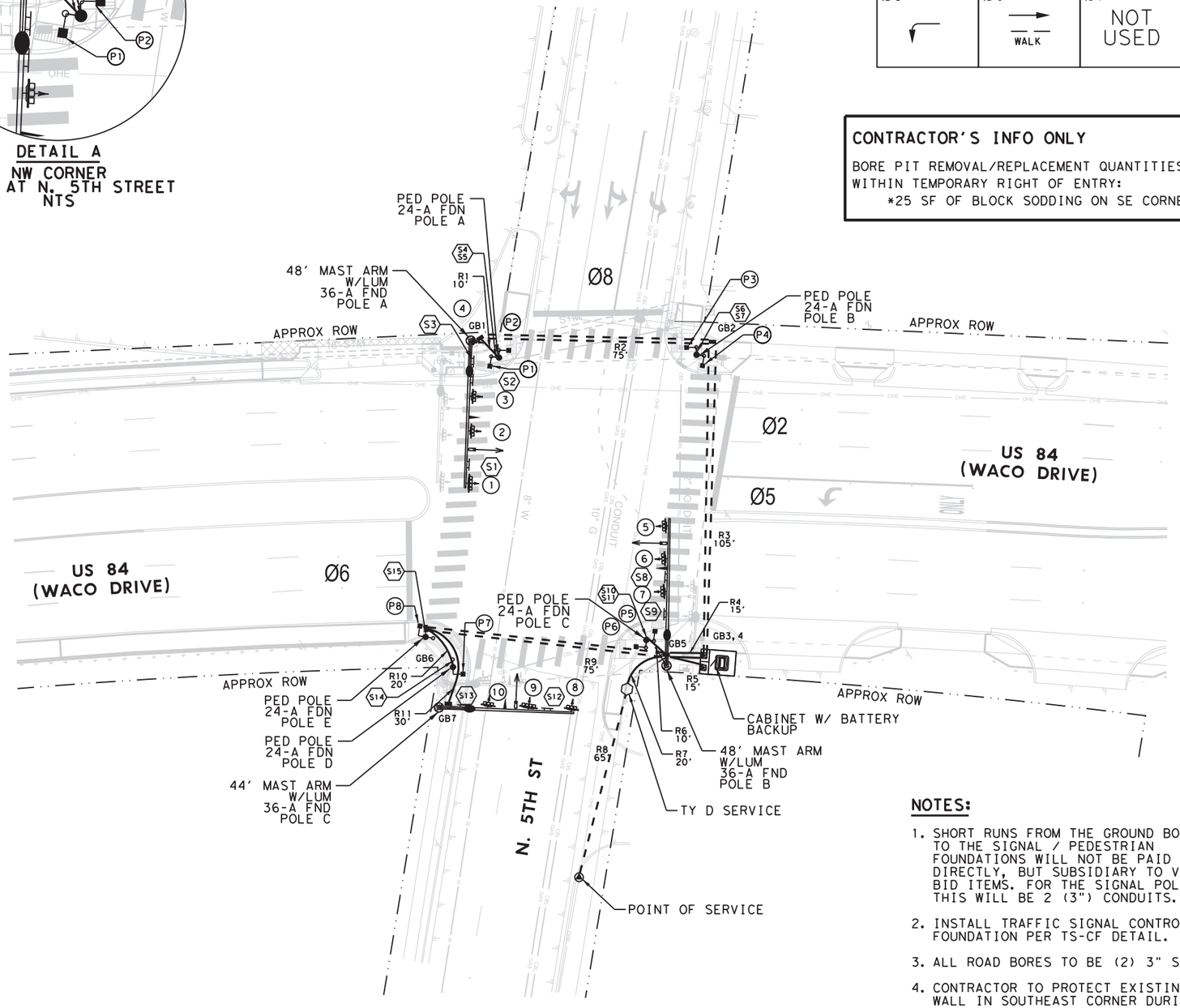

PROPOSED RING AND STRUCTURE

Ø1 NOT USED	Ø2 WALK ←	Ø3 NOT USED	Ø4 WALK
Ø5	Ø6 → WALK	Ø7 NOT USED	Ø8 WALK ↓ →

CONTRACTOR'S INFO ONLY

BORE PIT REMOVAL/REPLACEMENT QUANTITIES
WITHIN TEMPORARY RIGHT OF ENTRY:
*25 SF OF BLOCK SODDING ON SE CORNER

0' 20' 40'

LEGEND

- PROPOSED POINT OF SERVICE
- PROPOSED ELECTRICAL SERVICE
- PROPOSED CONDUIT, PVC
- PROPOSED CONDUIT, BORE
- PROPOSED VIVDS
- PROPOSED GROUND BOX (TY D)
- PROPOSED LED COUNTDOWN & APS
- PROPOSED LUMINAIRE
- PROPOSED SIGNAL POLE ASSEMBLY
- PROPOSED OPTICOM DETECTOR (INSTALL ONLY)
- PROPOSED ITS RADIO ANTENNA
- PROPOSED SIGNAL CABINET

NOTES:

1. SHORT RUNS FROM THE GROUND BOXES TO THE SIGNAL / PEDESTRIAN FOUNDATIONS WILL NOT BE PAID DIRECTLY, BUT SUBSIDIARY TO VARIOUS BID ITEMS. FOR THE SIGNAL POLES, THIS WILL BE 2 (3") CONDUITS.
2. INSTALL TRAFFIC SIGNAL CONTROLLER FOUNDATION PER TS-CF DETAIL.
3. ALL ROAD BORES TO BE (2) 3" SCH 80.
4. CONTRACTOR TO PROTECT EXISTING RETAINING WALL IN SOUTHEAST CORNER DURING CONDUIT INSTALLATION. COST OF WALL PROTECTION WILL BE SUBSIDIARY TO VARIOUS BID ITEMS.

ELECTRICAL SERVICE DATA

Electrical Service ID	Plan Sheet Number	Electrical Service Description	Service Conduit Size	Service Conductors No./Size	Safety Switch Amps	Main Ckt. Bkr. Pole/Amps	Two-Pole Contactor Amps	Panelbed/ Loadcenter Amp Rating	Branch Circuit ID	Branch Ckt. Bkr. Pole/Amps	Branch Circuit Amps	KVA Load
ES-18	315	ELEC SRV TY D 120/240 060 (NS)SS(E)PS(U)	2"	3/#6	N/A	2P/60	30	100	Sig. Controller	1P/30	27.5	4.1
									Luminaires	2P/15	6.9	

Scott R. Arnold, P.E.
03/01/2021

Kimley»Horn F-928

© 2021

Texas Department of Transportation

PROPOSED TRAFFIC SIGNAL

AT N. 5TH STREET

SHEET 2 OF 5

FED. RD. DIV. NO.	PROJECT ID.	HIGHWAY NO.
6	(SEE TITLE SHEET)	US 84

STATE	DIST.	COUNTY	SHEET NO.
TEXAS	WAC	MCLENNAN	315
CONT.	SECT.	JOB	
0055	15	072	

FILENAME: pw:\\kh-pw.bentley.com:kh-pw-01\Documents\01 Active Projects\TX-FTW-063586010 - US 84 (Waco Drive)\WAC 0055150721\4 - Design\Plan Set\8. Traffic\US84_SIG01_N5TH.dgn
PLOTTED: 12/21/2020

SIGNAL WIRING DETAIL

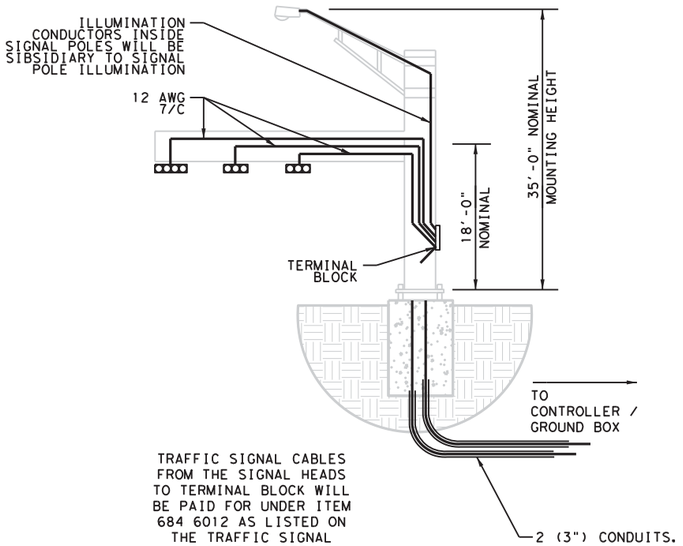

TRAFFIC SIGNAL CABLES FROM THE SIGNAL HEADS TO TERMINAL BLOCK WILL BE PAID FOR UNDER ITEM 684 6012 AS LISTED ON THE TRAFFIC SIGNAL SUMMARY SHEET.

EACH SIGNAL HEAD WILL BE WIRED TO TERMINAL BLOCK.

SIGNAL HEADS

PED SIGNAL HEADS
P1, P2, P3, P4, P5, P6, P7, P8

SIGNAL HEAD #1

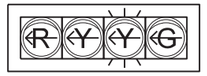

SIGNAL HEADS #2, 3, 5, 6, 7, 10

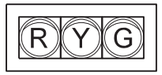

SIGNAL HEAD #8

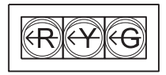

SIGNAL HEAD #9

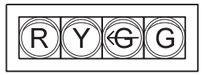

SIGNAL HEAD #4

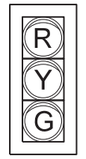

NOTES:

1. TY A SIGNS MOUNTED ON SIGNAL EQUIPMENT IS SHOWN FOR CONTRACTOR INFORMATION ONLY AND SUBSIDIARY TO ITEM 680 6002.

SIGNS

S4, S6, S10, S15

R10-3E(R)

9" X 15"
TY A
ALUM

(0.94 SQ FT)
EACH

S5, S7, S11, S14

R10-3E(L)

9" X 15"
TY A
ALUM

(0.94 SQ FT)
EACH

S2

R6-2(L)

30" X 36"
TY A
ALUM

(7.5 SQ FT)
EACH

S8

R6-2(R)

30" X 36"
TY A
ALUM

(7.5 SQ FT)
EACH

S1

R10-17T

36" X 42"
TY A
ALUM

(10.5 SQ FT)
EACH

S12

R3-8 L

30" X 30"
TY A
ALUM

(6.25 SQ FT)
EACH

S3

D3-1G

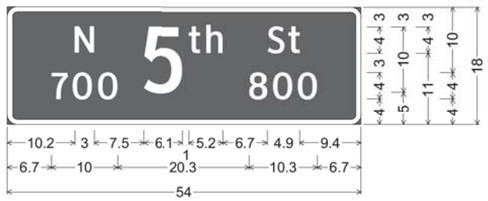

54" X 18"
TY A
ALUM

(6.75 SQ FT)
EACH

D3-1G;
1.5" Radius, 0.8" Border, White on, Green;
"N", ClearviewHwy-3-W; "700", ClearviewHwy-3-W;
"5", ClearviewHwy-3-W; "th", ClearviewHwy-3-W;
"St", ClearviewHwy-3-W; "800", ClearviewHwy-3-W;

S9

D3-1G

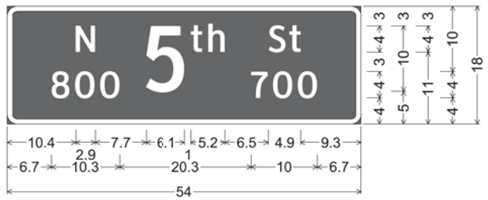

54" X 18"
TY A
ALUM

(6.75 SQ FT)
EACH

D3-1G;
1.5" Radius, 0.8" Border, White on, Green;
"N", ClearviewHwy-3-W; "800", ClearviewHwy-3-W;
"5", ClearviewHwy-3-W; "th", ClearviewHwy-3-W;
"St", ClearviewHwy-3-W; "700", ClearviewHwy-3-W;

S13

D3-1G

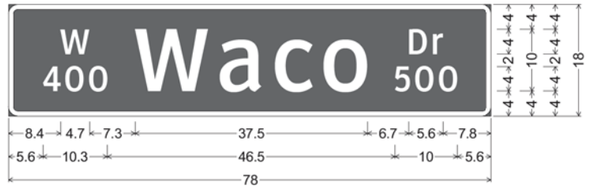

78" X 18"
TY A
ALUM

(9.75 SQ FT)
EACH

D3-1G;
1.5" Radius, 0.8" Border, White on, Green;
"W", ClearviewHwy-3-W; "400", ClearviewHwy-3-W;
"Waco", ClearviewHwy-3-W; "Dr", ClearviewHwy-3-W;
"500", ClearviewHwy-3-W;

Scott K. Arnold, P.E.
12/21/2020

Kimley»Horn F-928

© 2021

Texas Department of Transportation

TRAFFIC SIGNAL SIGNS AND HEADS

AT N. 5TH STREET

SHEET 3 OF 5

FED.RD. DIV.NO.	PROJECT ID.	HIGHWAY NO.
6	(SEE TITLE SHEET)	US 84

STATE	DIST.	COUNTY	SHEET NO.
TEXAS	WAC	MCLENNAN	316
CONT.	SECT.	JOB	
0055	15	072	

FILENAME: pw:\\kh-pw.bentley.com:kh-pw-01\Documents\01 Active Projects\TX-FTW-063586010 - US 84 (Waco Drive)\WAC 0055150724 - Design\Plan Set\8. Traffic\US84_SIGSIGNOI_N5TH.dgn
PLOTTED: 12/21/2020

PROJECT	US 84 (0055-15-072)														
SHEET	317														
			618 6047	618 6029	618 6054	620 6007	620 6008	620 6009	620 6010	684 6007	684 6012	684 6021	684 6049	6306 6007	OPTICOM CABLE	ITS RADIO CABLE
			CONDT (PVC) (SCH 80) (2") (BORE)	CONDT (PVC) (SCH 40) (3")	CONDT (PVC) (SCH 80) (3") (BORE)	ELEC CONDR (NO.8) BARE	ELEC CONDR (NO.8) INSULATED	ELEC CONDR (NO.6) BARE	ELEC CONDR (NO.6) INSULATED	TRF SIG CBL (TY A)(12 AWG)(2 CONDR)	TRF SIG CBL (TY A)(12 AWG)(7 CONDR)	TRF SIG CBL (TY A)(12 AWG)(16 CONDR)	TRF SIG CBL (TY A)(16 AWG)(3 CONDR)	VIVDS CABLING	FOR CONTRACTOR INFO ONLY	FOR CONTRACTOR INFO ONLY
TRF ID	TABLE	Location	LF	LF	LF	LF	LF	LF	LF	LF	LF	LF	LF	LF	LF	LF
CONDUIT R01	CONDUIT	TRENCH		10		10				20			20			
CONDUIT R02-1	CONDUIT	BORE			75	75	150									
CONDUIT R02-2	CONDUIT	BORE			75	75				150		75	150	75	75	
CONDUIT R03-1	CONDUIT	BORE			105	105	210									
CONDUIT R03-2	CONDUIT	BORE			105	105				420		105	420	105	105	
CONDUIT R04-1	CONDUIT	TRENCH		15		15	30			60		30	60	30	30	15
CONDUIT R04-2	CONDUIT	TRENCH		15		15										
CONDUIT R05	CONDUIT	TRENCH		15				15	30							
CONDUIT R06	CONDUIT	TRENCH		10		10				20			20			
CONDUIT R07	CONDUIT	TRENCH		20			80	20	40							
CONDUIT R08*	CONDUIT	BORE	65													
CONDUIT R09-1	CONDUIT	BORE			75	75	150			150		75	150	75	75	
CONDUIT R09-2	CONDUIT	BORE			75	75										
CONDUIT R10	CONDUIT	TRENCH		20		20				20			20			
CONDUIT R11	CONDUIT	TRENCH		30		30	60					30		30	30	
PED POLE A	CONDUIT	IN PED POLE								10			20			
PED POLE B	CONDUIT	IN PED POLE								10			20			
PED POLE C	CONDUIT	IN PED POLE								10			20			
PED POLE D	CONDUIT	IN PED POLE								5			10			
PED POLE E	CONDUIT	IN PED POLE								5			10			
SIGNAL POLE A	CONDUIT	IN SIGNAL POLE									185			60	50	
SIGNAL POLE B	CONDUIT	IN SIGNAL POLE									175			65	55	30
SIGNAL POLE C	CONDUIT	IN SIGNAL POLE									155			50	45	
Grand Total			65	135	510	610	680	35	70	880	515	315	920	490	465	45

*CONDUIT RUN 8 SHALL INCLUDE A SWEEPING 90° PVC AND SHALL STUB UP AT BOTTOM OF ONCOR POLE.

FILENAME: pw:\\kh-pw.bentley.com:kh-pw-01\Documents\01 Active Projects\TX-FTW-063586010 - US 84 (Waco Drive)\WAC 005515072\4 - Design\Plan Set\8. Traffic\US84_CONSUM01_N5TH.dgn
PLOTTED: 12/21/2020

Scott R. Arnold, P.E.

12/21/2020

Kimley»Horn F-928

© 2021

Texas Department of Transportation

CONDUIT AND CONDUCTOR SUMMARY

AT N. 5TH STREET

SHEET 4 OF 5

FED.RD. DIV.NO.	PROJECT ID.	HIGHWAY NO.
6	(SEE TITLE SHEET)	US 84

STATE	DIST.	COUNTY	SHEET NO.
TEXAS	WAC	MCLENNAN	317
CONT.	SECT.	JOB	
0055	15	072	

PROJECT	US 84 (0055-15-072)													
SHEET	318													
		624 6010	628 6144	680 6002	680 6004	682 6018	688 6001	688 6003	6058 6001	6062 6038	6306 6001	6306 6002	CABINET	OPTICOM	TY A SIGN
		GROUND BOX TY D (162922)W/APRON	ELC SRV TY D 120/240 060(NS)SS(E)PS(U)	INSTALL HWY TRF SIG (ISOLATED)	REMOVING TRAFFIC SIGNALS	PED SIG SEC (LED)(COUNTDOWN)	PED DETECT PUSH BUTTON (APS)	PED DETECTOR CONTROLLER UNIT	BBU SYSTEM (EXTERNAL BATT CABINET)	ITS RADIO (DUAL)(5 GHZ/5 GHZ)-C-U	VIVDS PROSR SYS	VIVDS CAM ASSY FXD LNS	TxDOT CABINET AND CONTROLLER	FOR CONTRACTOR INFO ONLY	FOR CONTRACTOR INFO ONLY
TRF ID	TABLE	EA	EA	EA	EA	EA	EA	EA	EA	EA	EA	EA	EA	EA	SF
BBU	MISCELLANEOUS								1						
CABINET	MISCELLANEOUS												1		
GROUND BOX	MISCELLANEOUS	7													
ITS RADIO	MISCELLANEOUS									1					
OPTICOM	MISCELLANEOUS													3	
P1	MISCELLANEOUS					1									
P2	MISCELLANEOUS					1									
P3	MISCELLANEOUS					1									
P4	MISCELLANEOUS					1									
P5	MISCELLANEOUS					1									
P6	MISCELLANEOUS					1									
P7	MISCELLANEOUS					1									
P8	MISCELLANEOUS					1									
PED	MISCELLANEOUS						8	1							
SERVICE	MISCELLANEOUS		1												
SIGN	MISCELLANEOUS														63
SIGNAL	MISCELLANEOUS			1	1										
VIVDS	MISCELLANEOUS										1	3			
Grand Total		7	1	1	1	8	8	1	1	1	1	3	1	3	63

PROJECT	US 84 (0055-15-072)								
SHEET	318								
		682 6001	682 6002	682 6003	682 6004	682 6005	682 6006	682 6054	682 6055
		VEH SIG SEC (12")LED(GRN)	VEH SIG SEC (12")LED(GRN ARW)	VEH SIG SEC (12")LED(YEL)	VEH SIG SEC (12")LED(YEL ARW)	VEH SIG SEC (12")LED(RED)	VEH SIG SEC (12")LED(RED ARW)	BACKPLATE W/REF BRDR(3 SEC)(VENT)ALUM	BACKPLATE W/REF BRDR(4 SEC)(VENT)ALUM
TRF ID	TABLE	EA	EA	EA	EA	EA	EA	EA	EA
SIGNAL HEAD 01	SIGNAL HEAD		1		2		1		1
SIGNAL HEAD 02	SIGNAL HEAD	1		1		1		1	
SIGNAL HEAD 03	SIGNAL HEAD	1		1		1		1	
SIGNAL HEAD 04	SIGNAL HEAD	1		1		1		1	
SIGNAL HEAD 05	SIGNAL HEAD	1		1		1		1	
SIGNAL HEAD 06	SIGNAL HEAD	1		1		1		1	
SIGNAL HEAD 07	SIGNAL HEAD	1		1		1		1	
SIGNAL HEAD 08	SIGNAL HEAD		1		1		1	1	
SIGNAL HEAD 09	SIGNAL HEAD	1	1	1		1			1
SIGNAL HEAD 10	SIGNAL HEAD	1		1		1		1	
Grand Total		8	3	8	3	8	2	8	2

PROJECT	US 84 (0055-15-072)			
SHEET	318			
		686 6047	686 6051	687 6001
		INS TRF SIG PL AM(S)1 ARM(44')LUM	INS TRF SIG PL AM(S)1 ARM(48')LUM	PED POLE ASSEMBLY
TRF ID	TABLE	EA	EA	EA
PED POLE A	POLE			1
PED POLE B	POLE			1
PED POLE C	POLE			1
PED POLE D	POLE			1
PED POLE E	POLE			1
TRAFFIC SIGNAL POLE A	POLE		1	
TRAFFIC SIGNAL POLE B	POLE		1	
TRAFFIC SIGNAL POLE C	POLE	1		
Grand Total		1	2	5

PROJECT	US 84 (0055-15-072)		
SHEET	318		
		PED POLE FND	416 6032
		FOR CONTRACTOR INFO ONLY	DRILL SHAFT(TRF SIG POLE) (36 IN)
TRF ID	TABLE	LF	LF
PED POLE FND A	FOUNDATIONS	5.7	
PED POLE FND B	FOUNDATIONS	5.7	
PED POLE FND C	FOUNDATIONS	5.7	
PED POLE FND D	FOUNDATIONS	5.7	
PED POLE FND E	FOUNDATIONS	5.7	
SIGNAL POLE FND A	FOUNDATIONS		13.2
SIGNAL POLE FND B	FOUNDATIONS		13.2
SIGNAL POLE FND C	FOUNDATIONS		13.2
Grand Total		28.5	39.6

STATE OF TEXAS
SCOTT R ARNOLD
96782
LICENSED
PROFESSIONAL ENGINEER

Scott R Arnold, P.E.

12/21/2020

Kimley»Horn F-928

© 2021

Texas Department of Transportation

TRAFFIC SIGNAL SUMMARY

AT N. 5TH STREET

SHEET 5 OF 5

FED.RD. DIV.NO.	PROJECT ID.	HIGHWAY NO.
6	(SEE TITLE SHEET)	US 84

STATE	DIST.	COUNTY	SHEET NO.
TEXAS	WAC	MCLENNAN	318
CONT.	SECT.	JOB	
0055	15	072	

FILENAME: pw:\\kh-pw.bentley.com:kh-pw-01\Documents\01 Active Projects\TX-FTW-063586010 - US 84 (Waco Drive)\WAC 005515072\4 - Design\Plan Set\8. Traffic\US84_SIGSUM01_N5TH.dgn
PLOTTED: 12/21/2020

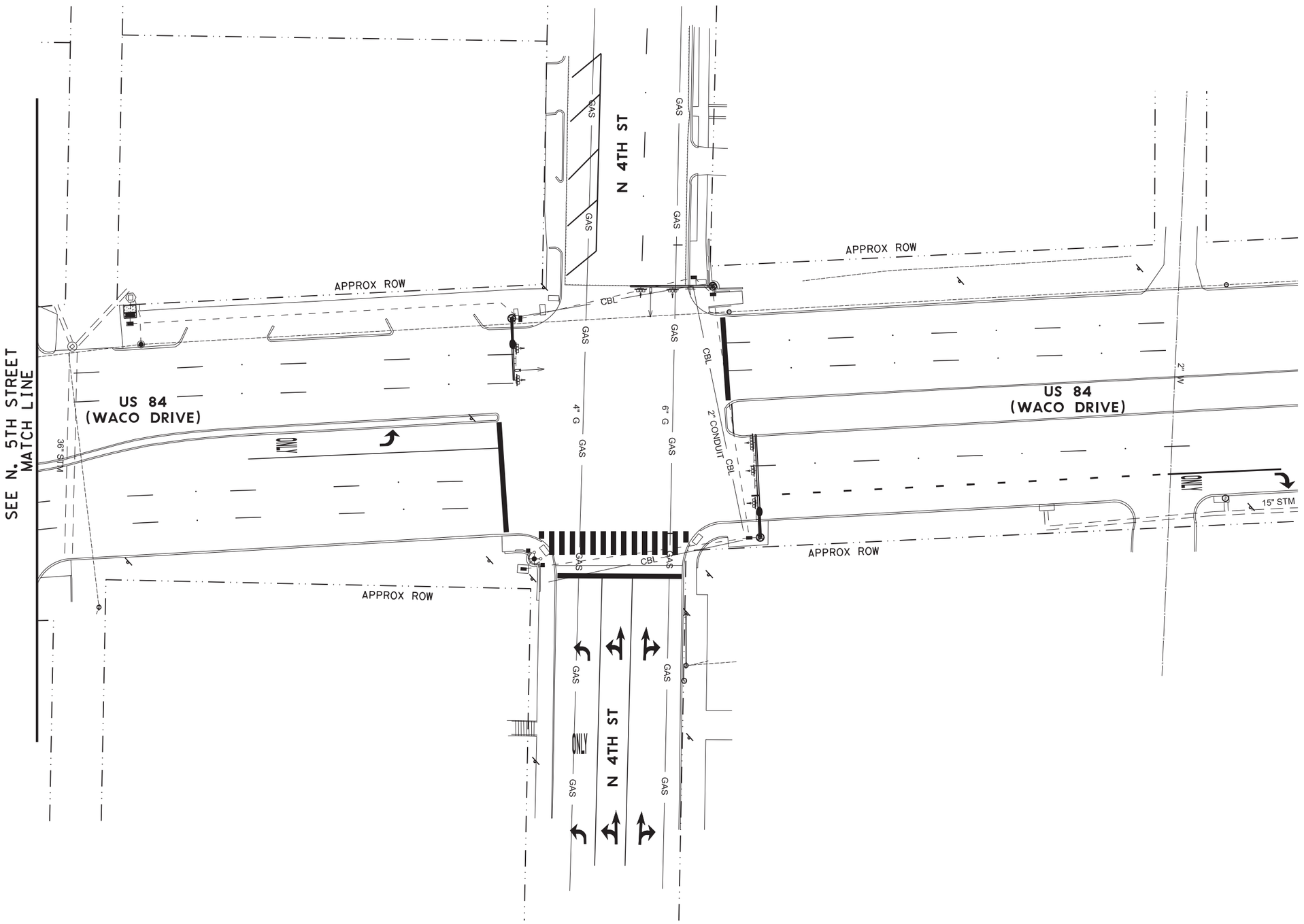

LEGEND

- POINT OF SERVICE
- ELECTRICAL SERVICE
- CONDUIT, PVC
- GROUND BOX

NOTES

1. THE LOCATIONS SHOWN AS EXISTING CONDUIT RUNS ARE APPROXIMATE. THE EXACT LOCATION WILL BE DETERMINED IN THE FIELD. NO EXISTING CONDUIT WILL BE USED, SEE PROPOSED TRAFFIC SIGNAL SHEETS.

STATE OF TEXAS
SCOTT R ARNOLD
96782
LICENSED
PROFESSIONAL ENGINEER

Scott R Arnold, P.E.
12/21/2020

Kimley»Horn F-928

© 2021

Texas Department of Transportation

CONDITION DIAGRAM

AT N. 4TH STREET

SHEET 1 OF 5

FED.RD. DIV.NO.	PROJECT ID.	HIGHWAY NO.
6	(SEE TITLE SHEET)	US 84

STATE	DIST.	COUNTY	SHEET NO.
TEXAS	WAC	MCLENNAN	319
CONT.	SECT.	JOB	
0055	15	072	

FILENAME: pw:\\kh-pw.bentley.com:kh-pw-01\Documents\01 Active Projects\TX-FTW-063586010 - US 84 (Waco Drive)\WAC 005515072\4 - Design\Plan Set\8. Traffic\US84_COND01_N4TH.dgn
PLOTTED: 12/21/2020

ELECTRICAL SERVICE DATA											
Electrical Service ID	Plan Sheet Number	Electrical Service Description	Service Conduit Size	Service Conductors No./Size	Safety Switch Amps	Main Ckt. Bkr. Pole/Amps	Two-Pole Contactor Amps	Panelbed/ Loadcenter Amp Rating	Branch Circuit ID	Branch Ckt. Bkr. Pole/Amps	Branch Circuit Amps	KVA Load
ES-19	~~235~~	ELEC SRV TY D 120/240 060 (NS)SS(E)PS(U)	2"	3/#6	N/A	2P/60	30	100	Sig. Controller	1P/30	27.7	4.2
									Luminaires	2P/15	6.9	

PROPOSED RING AND STRUCTURE

Ø1	Ø2 WALK	Ø3 NOT USED	Ø4 NOT USED
Ø5 NOT USED	Ø6 WALK	Ø7 WALK WALK	Ø8 NOT USED

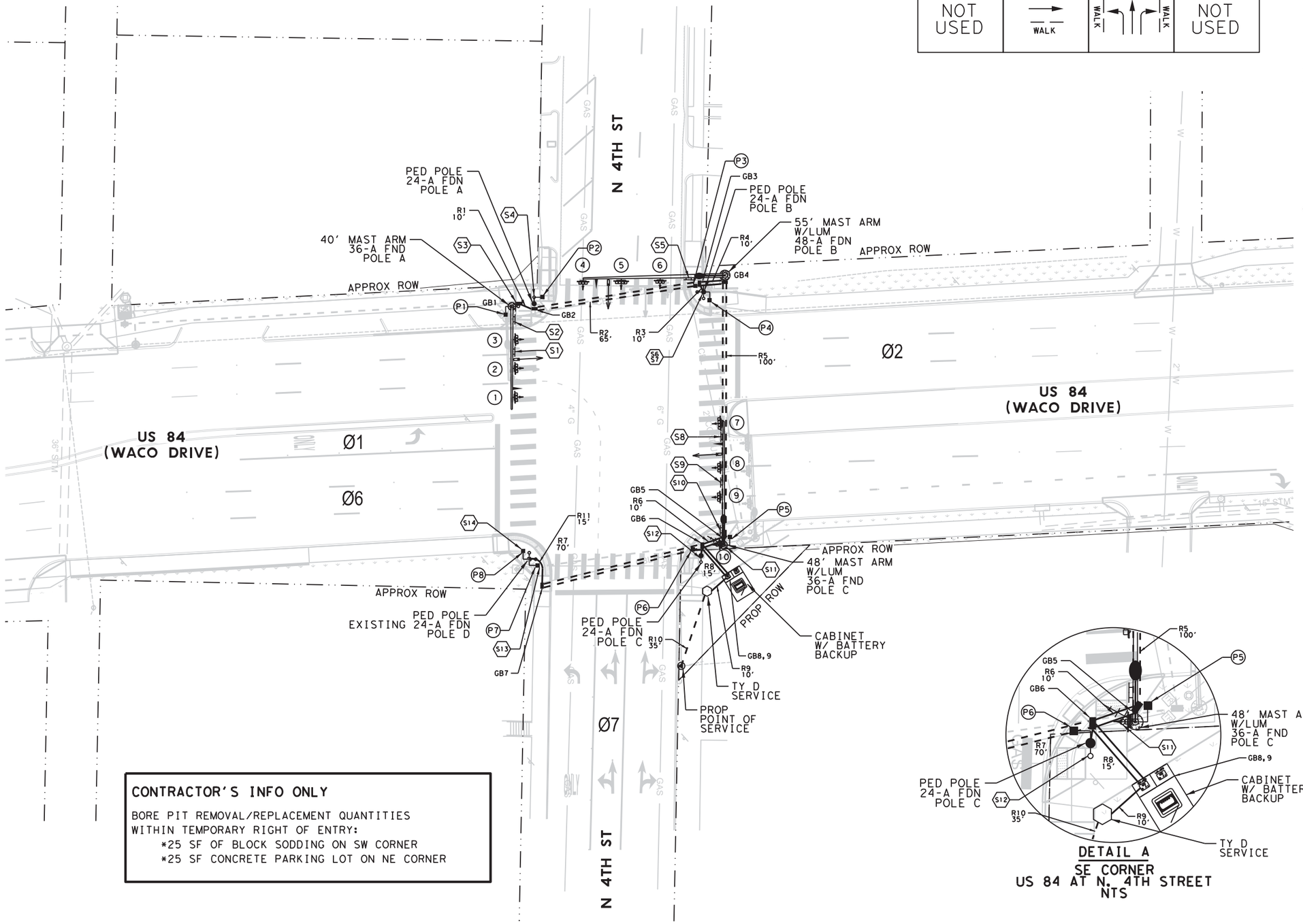

DETAIL A
SE CORNER
US 84 AT N. 4TH STREET
NTS

CONTRACTOR'S INFO ONLY

BORE PIT REMOVAL/REPLACEMENT QUANTITIES
WITHIN TEMPORARY RIGHT OF ENTRY:
- *25 SF OF BLOCK SODDING ON SW CORNER
- *25 SF CONCRETE PARKING LOT ON NE CORNER

0' 20' 40'

LEGEND

- PROPOSED POINT OF SERVICE
- PROPOSED ELECTRICAL SERVICE
- PROPOSED CONDUIT, PVC
- PROPOSED CONDUIT, BORE
- PROPOSED VIVDS
- PROPOSED GROUND BOX (TY D)
- PROPOSED LED COUNTDOWN & APS
- PROPOSED LUMINAIRE
- PROPOSED SIGNAL POLE ASSEMBLY
- PROPOSED OPTICOM DETECTOR (INSTALL ONLY)
- PROPOSED ITS RADIO ANTENNA
- PROPOSED SIGNAL CABINET

NOTES:

1. SHORT RUNS FROM THE GROUND BOXES TO THE SIGNAL / PEDESTRIAN FOUNDATIONS WILL NOT BE PAID DIRECTLY, BUT SUBSIDIARY TO VARIOUS BID ITEMS. FOR THE SIGNAL POLES, THIS WILL BE 2 (3") CONDUITS.
2. INSTALL TRAFFIC SIGNAL CONTROLLER FOUNDATION PER TS-CF DETAIL.
3. ALL ROAD BORES TO BE (2) 3" SCH 80.

STATE OF TEXAS · SCOTT R. ARNOLD · 96782 · LICENSED PROFESSIONAL ENGINEER

Scott R. Arnold, P.E.
03/01/2021

Kimley»Horn F-928

© 2021
Texas Department of Transportation

PROPOSED TRAFFIC SIGNAL

AT N. 4TH STREET

SHEET 2 OF 5

FED.RD. DIV.NO.	PROJECT ID.	HIGHWAY NO.
6	(SEE TITLE SHEET)	US 84

STATE	DIST.	COUNTY	SHEET NO.
TEXAS	WAC	MCLENNAN	320
CONT.	SECT.	JOB	
0055	15	072	

FILENAME: pw:\\kh-pw.bentley.com:kh-pw-01\Documents\01 Active Projects\TX-FTW-063586010 - US 84 (Waco Drive)\WAC 0055150724 - Design\Plan Set\8. Traffic\US84_SIG01_N4TH.dgn
PLOTTED: 12/21/2020

SIGNAL WIRING DETAIL

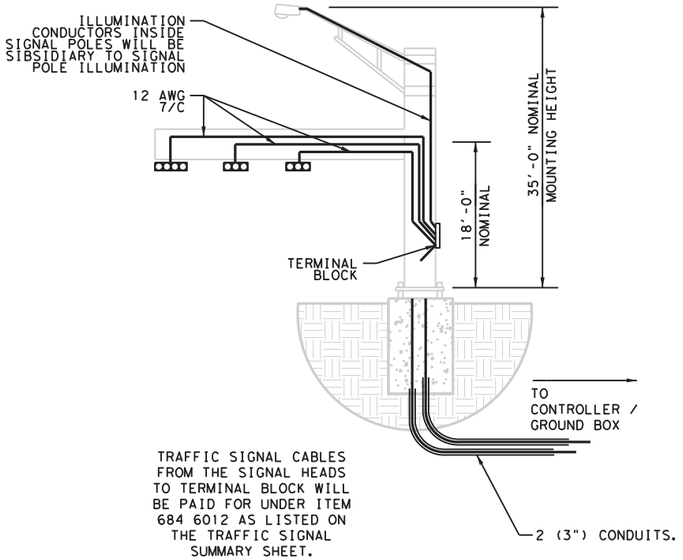

TRAFFIC SIGNAL CABLES FROM THE SIGNAL HEADS TO TERMINAL BLOCK WILL BE PAID FOR UNDER ITEM 684 6012 AS LISTED ON THE TRAFFIC SIGNAL SUMMARY SHEET.

EACH SIGNAL HEAD WILL BE WIRED TO TERMINAL BLOCK.

SIGNAL HEADS

PED SIGNAL HEADS P1, P2, P3, P4, P5, P6, P7, P8

SIGNAL HEADS #1, 2, 3, 6, 8, 9

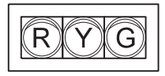

SIGNAL HEAD #4

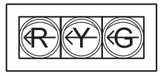

SIGNAL HEAD #5

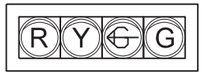

SIGNAL HEAD #7

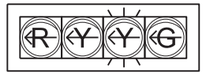

SIGNAL HEAD #10

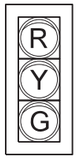

NOTES:

1. TY A SIGNS MOUNTED ON SIGNAL EQUIPMENT IS SHOWN FOR CONTRACTOR INFORMATION ONLY AND SUBSIDIARY TO ITEM 680 6002.

SIGNS

S6 S14

R10-3E(R)

9" X 15" TY A ALUM

(0.94 SQ FT) EACH

S3 S4 S7 S11 S12 S13

R10-3E(L)

9" X 15" TY A ALUM

(0.94 SQ FT) EACH

S9

R6-2(L)

30" X 36" TY A ALUM

(7.5 SQ FT) EACH

S1

R6-2(R)

30" X 36" TY A ALUM

(7.5 SQ FT) EACH

S8

R10-17T

36" X 42" TY A ALUM

(10.5 SQ FT) EACH

S2

D3-1G

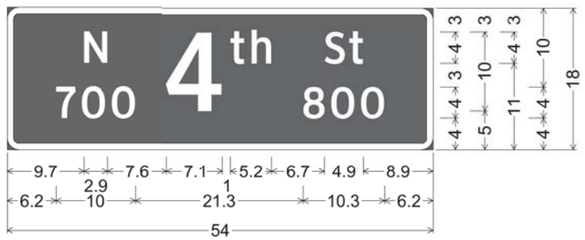

52" X 18" TY A ALUM

(6.5 SQ FT) EACH

D3-1G;
1.5" Radius, 0.8" Border, White on, Green;
"N", ClearviewHwy-3-W; "700", ClearviewHwy-3-W;
"4", ClearviewHwy-3-W; "th", ClearviewHwy-3-W;
"St", ClearviewHwy-3-W; "800", ClearviewHwy-3-W;

S10

D3-1G

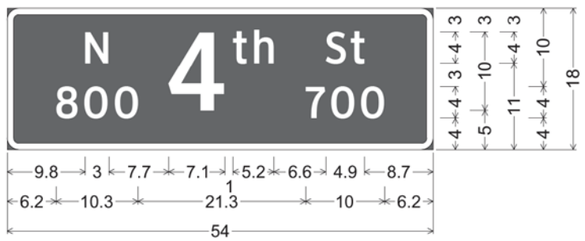

52" X 18" TY A ALUM

(6.5 SQ FT) EACH

D3-1G;
1.5" Radius, 0.8" Border, White on, Green;
"N", ClearviewHwy-3-W; "800", ClearviewHwy-3-W;
"4", ClearviewHwy-3-W; "th", ClearviewHwy-3-W;
"St", ClearviewHwy-3-W; "700", ClearviewHwy-3-W;

S5

D3-1G

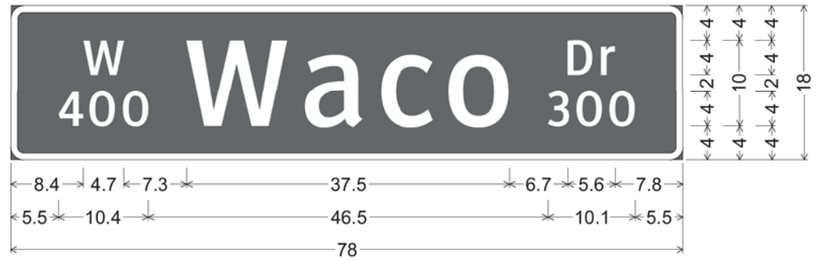

78" X 18" TY A ALUM

(9.75 SQ FT) EACH

D3-1G;
1.5" Radius, 0.8" Border, White on, Green;
"W", ClearviewHwy-3-W; "400", ClearviewHwy-3-W;
"Waco", ClearviewHwy-3-W; "Dr", ClearviewHwy-3-W;
"300", ClearviewHwy-3-W;

Scott R. Arnold, P.E.

12/21/2020

Kimley»Horn F-928

© 2021

Texas Department of Transportation

TRAFFIC SIGNAL SIGNS AND HEADS

AT N. 4TH STREET

SHEET 3 OF 5

FED.RD. DIV.NO.	PROJECT ID.		HIGHWAY NO.
6	(SEE TITLE SHEET)		US 84
STATE	DIST.	COUNTY	SHEET NO.
TEXAS	WAC	MCLENNAN	321
CONT.	SECT.	JOB	
0055	15	072	

FILENAME: pw:\\kh-pw.bentley.com:kh-pw-01\Documents\01 Active Projects\TX-FTW-063586010 - US 84 (Waco Drive)\WAC 005515072\4 - Design\Plan Set\8. Traffic\US84_SIGSIGNOI_N4TH.dgn
PLOTTED: 12/21/2020

PROJECT	US 84 (0055-15-072)
SHEET	322

			618 6047	618 6029	618 6054	520 6007	620 6008	620 6009	620 6010	684 6007	684 6012	684 6021	684 6049	6306 6007	OPTICOM CABLE	ITS RADIO CABLE
			CONDT (PVC) (SCH 80) (2") (BORE)	CONDT (PVC) (SCH 40) (3")	CONDT (PVC) (SCH 80) (3") (BORE)	ELEC CONDR (NO.8) BARE	ELEC CONDR (NO.8) INSULATED	ELEC CONDR (NO.6) BARE	ELEC CONDR (NO.6) INSULATED	TRF SIG CBL (TY A)(12 AWG)(2 CONDR)	TRF SIG CBL (TY A)(12 AWG)(7 CONDR)	TRF SIG CBL (TY A)(12 AWG)(16 CONDR)	TRF SIG CBL (TY A)(16 AWG)(3 CONDR)	VIVDS CABLING	FOR CONTRACTOR INFO ONLY	FOR CONTRACTOR INFO ONLY
TRF ID	TABLE	Location	LF	LF	LF	LF	LF	LF	LF	LF	LF	LF	LF	LF	LF	LF
CONDUIT R01	CONDUIT	TRENCH		10		10				10		10		10	10	
CONDUIT R02-1	CONDUIT	BORE			65	65				130		65	65	65	65	
CONDUIT R02-2	CONDUIT	BORE			65	65										
CONDUIT R03	CONDUIT	TRENCH		10		10				20			20			
CONDUIT R04-1	CONDUIT	TRENCH		10		10				40		10	30	10	10	
CONDUIT R04-2	CONDUIT	TRENCH		10		10										
CONDUIT R05-1	CONDUIT	BORE			100	100	200			400		200	300	200	200	
CONDUIT R05-2	CONDUIT	BORE			100	100										
CONDUIT R06-1	CONDUIT	TRENCH		10		10	20			50		30	30	30	30	10
CONDUIT R06-2	CONDUIT	TRENCH		10		10										
CONDUIT R07-1	CONDUIT	BORE			70	70				140			140			
CONDUIT R07-2	CONDUIT	BORE			70	70										
CONDUIT R08-1	CONDUIT	TRENCH		15		15	30			120		45	90	45	45	15
CONDUIT R08-2	CONDUIT	TRENCH		15		15										
CONDUIT R09	CONDUIT	TRENCH		10			20	10	20							
CONDUIT R10*	CONDUIT	BORE	35													
CONDUIT R11	CONDUIT	TRENCH		15		15				30			30			
PED POLE A	CONDUIT	IN PED POLE								5			10			
PED POLE B	CONDUIT	IN PED POLE								10			20			
PED POLE C	CONDUIT	IN PED POLE								5			10			
PED POLE D	CONDUIT	IN PED POLE								10			20			
SIGNAL POLE A	CONDUIT	IN SIGNAL POLE									135		10	40	50	
SIGNAL POLE B	CONDUIT	IN SIGNAL POLE									185			65	70	
SIGNAL POLE C	CONDUIT	IN SIGNAL POLE									185			55	60	30
Grand Total			35	115	470	575	270	10	20	970	505	360	775	520	540	55

*CONDUIT RUN 10 SHALL INCLUDE A SWEEPING 90° PVC AND SHALL STUB UP AT BOTTOM OF ONCOR POLE.

FILENAME: pw:\\kh-pw.bentley.com:kh-pw-01\Documents\01 Active Projects\TX-FTW-063586010 - US 84 (Waco Drive)\WAC 005515072\4 - Design\Plan Set\8. Traffic\US84_CONSUM01_N4TH.dgn
PLOTTED: 12/21/2020

Scott R Arnold, P.E.

12/21/2020

Kimley»Horn F-928

© 2021

Texas Department of Transportation

CONDUIT AND CONDUCTOR SUMMARY

AT N. 4TH STREET

SHEET 4 OF 5

FED.RD. DIV.NO.	PROJECT ID.	HIGHWAY NO.
6	(SEE TITLE SHEET)	US 84

STATE	DIST.	COUNTY	SHEET NO.
TEXAS	WAC	MCLENNAN	322
CONT.	SECT.	JOB	
0055	15	072	

PROJECT	US 84 (0055-15-072)
SHEET	323

		624 6010	628 6144	680 6002	680 6004	682 6018	688 6001	688 6003	6058 6001	6062 6038	6306 6001	6306 6002	CABINET	OPTICOM	TY A SIGN
		GROUND BOX TY D (162922)W/APRON	ELC SRV TY D 120/240 060(NS)SS(E)PS(U)	INSTALL HWY TRF SIG (ISOLATED)	REMOVING TRAFFIC SIGNALS	PED SIG SEC (LED)(COUNTDOWN)	PED DETECT PUSH BUTTON (APS)	PED DETECTOR CONTROLLER UNIT	BBU SYSTEM (EXTERNAL BATT CABINET)	ITS RADIO (DUAL)(5 GHZ/5 GHZ)-C-U	VIVDS PROSR SYS	VIVDS CAM ASSY FXD LNS	TxDOT CABINET AND CONTROLLER	FOR CONTRACTOR INFO ONLY	FOR CONTRACTOR INFO ONLY
TRF ID	TABLE	EA	EA	EA	EA	EA	EA	EA	EA	EA	EA	EA	EA	EA	SF
BBU	MISCELLANEOUS								1						
CABINET	MISCELLANEOUS												1		
GROUND BOX	MISCELLANEOUS	7													
ITS RADIO	MISCELLANEOUS									1					
OPTICOM	MISCELLANEOUS													3	
P1	MISCELLANEOUS					1									
P2	MISCELLANEOUS					1									
P3	MISCELLANEOUS					1									
P4	MISCELLANEOUS					1									
P5	MISCELLANEOUS					1									
P6	MISCELLANEOUS					1									
P7	MISCELLANEOUS					1									
P8	MISCELLANEOUS					1									
PED	MISCELLANEOUS						8	1							
SERVICE	MISCELLANEOUS		1												
SIGN	MISCELLANEOUS														56
SIGNAL	MISCELLANEOUS			1	1										
VIVDS	MISCELLANEOUS										1	3			
Grand Total		7	1	1	1	8	8	1	1	1	1	3	1	3	56

PROJECT	US 84 (0055-15-072)
SHEET	323

		682 6001	682 6002	682 6003	682 6004	682 6005	682 6006	682 6054	682 6055
		VEH SIG SEC (12")LED(GRN)	VEH SIG SEC (12")LED(GRN ARW)	VEH SIG SEC (12")LED(YEL)	VEH SIG SEC (12")LED(YEL ARW)	VEH SIG SEC (12")LED(RED)	VEH SIG SEC (12")LED(RED ARW)	BACKPLATE W/REF BRDR(3 SEC)(VENT)ALUM	BACKPLATE W/REF BRDR(4 SEC)(VENT)ALUM
TRF ID	TABLE	EA	EA	EA	EA	EA	EA	EA	EA
SIGNAL HEAD 01	SIGNAL HEAD	1		1		1		1	
SIGNAL HEAD 02	SIGNAL HEAD	1		1		1		1	
SIGNAL HEAD 03	SIGNAL HEAD	1		1		1		1	
SIGNAL HEAD 04	SIGNAL HEAD		1		1		1	1	
SIGNAL HEAD 05	SIGNAL HEAD	1	1	1		1			1
SIGNAL HEAD 06	SIGNAL HEAD	1		1		1		1	
SIGNAL HEAD 07	SIGNAL HEAD		1		2		1		1
SIGNAL HEAD 08	SIGNAL HEAD	1		1		1		1	
SIGNAL HEAD 09	SIGNAL HEAD	1		1		1		1	
SIGNAL HEAD 10	SIGNAL HEAD	1		1		1		1	
Grand Total		8	3	8	3	8	2	8	2

PROJECT	US 84 (0055-15-072)
SHEET	323

		686 6041	686 6051	686 6059	687 6001
		INS TRF SIG PL AM(S)1 ARM(40')	INS TRF SIG PL AM(S)1 ARM(48')LUM	INS TRF SIG PL AM(S)1 ARM(55')LUM	PED POLE ASSEMBLY
TRF ID	TABLE	EA	EA	EA	EA
PED POLE A	POLE				1
PED POLE B	POLE				1
PED POLE C	POLE				1
PED POLE D	POLE				1
TRAFFIC SIGNAL POLE A	POLE	1			
TRAFFIC SIGNAL POLE B	POLE			1	
TRAFFIC SIGNAL POLE C	POLE		1		
Grand Total		1	1	1	4

PROJECT	US 84 (0055-15-072)
SHEET	323

		PED POLE FND	416 6032	416 6034
		FOR CONTRACTOR INFO ONLY	DRILL SHAFT (TRF SIG POLE) (36 IN)	DRILL SHAFT (TRF SIG POLE) (48 IN)
TRF ID	TABLE	LF	LF	LF
PED POLE FND A	FOUNDATIONS	5.7		
PED POLE FND B	FOUNDATIONS	5.7		
PED POLE FND C	FOUNDATIONS	5.7		
SIGNAL POLE FND A	FOUNDATIONS		13.2	
SIGNAL POLE FND B	FOUNDATIONS			21.9
SIGNAL POLE FND C	FOUNDATIONS		13.2	
Grand Total		17.1	26.4	21.9

ONLY FOUNDATIONS FOR PROPOSED POLES ARE SHOWN.

Scott K. Arnold, P.E.

12/21/2020

Kimley»Horn F-928

© 2021

Texas Department of Transportation

TRAFFIC SIGNAL SUMMARY

AT N. 4TH STREET

SHEET 5 OF 5

FED.RD. DIV.NO.	PROJECT ID.	HIGHWAY NO.
6	(SEE TITLE SHEET)	US 84

STATE	DIST.	COUNTY	SHEET NO.
TEXAS	WAC	MCLENNAN	323
CONT.	SECT.	JOB	
0055	15	072	

FILENAME: pw:\\kh-pw.bentley.com:kh-pw-01\Documents\01 Active Projects\TX-FTW-063586010 - US 84 (Waco Drive)\WAC 005515072\4 - Design\Plan Set\8. Traffic\US84_SIGSUM01_N4TH.dgn
PLOTTED: 12/21/2020

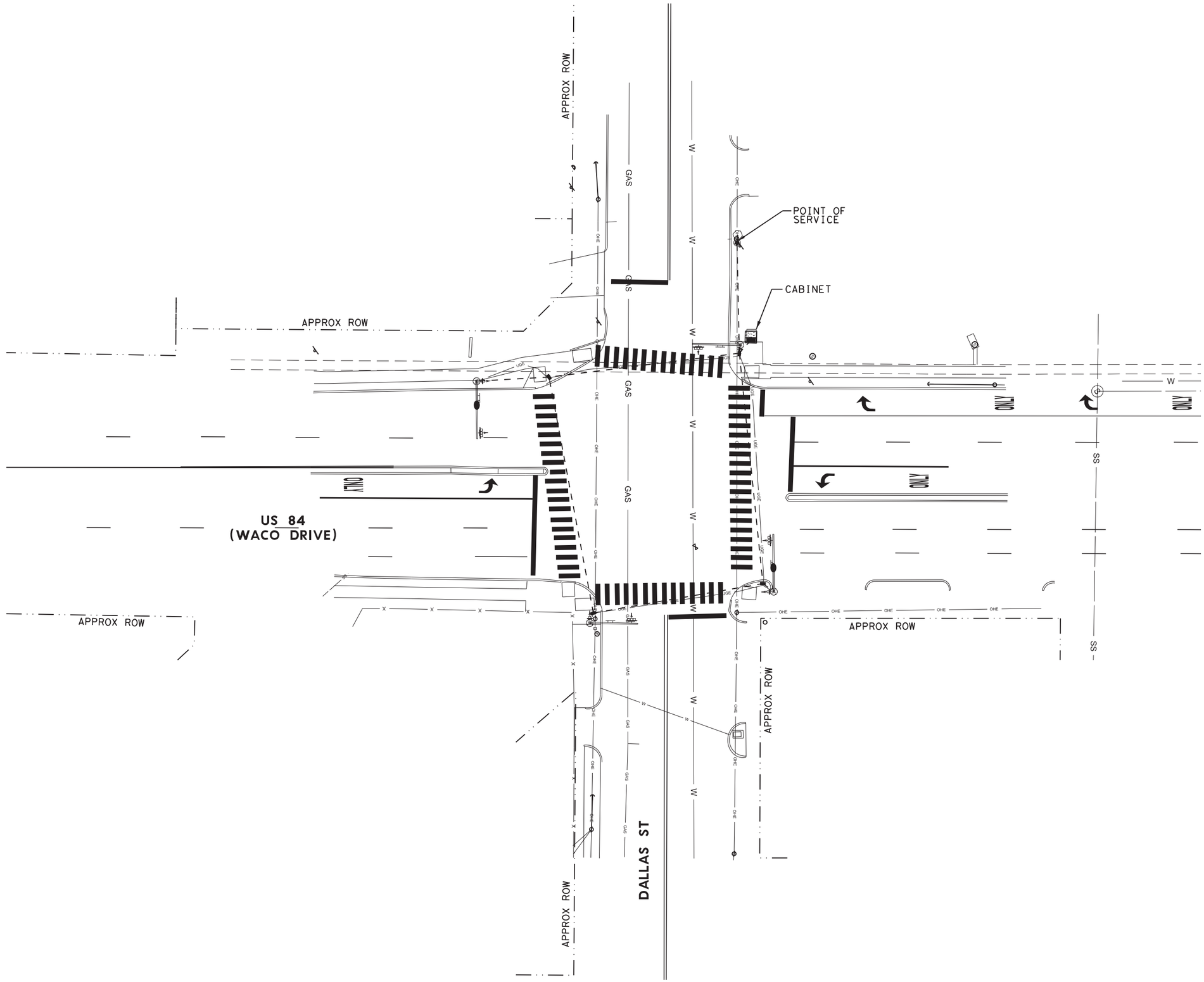

0' 20' 40'

LEGEND

- POINT OF SERVICE
- ELECTRICAL SERVICE
- CONDUIT, PVC
- GROUND BOX

NOTES

1. THE LOCATIONS SHOWN AS EXISTING CONDUIT RUNS ARE APPROXIMATE. THE EXACT LOCATION WILL BE DETERMINED IN THE FIELD. NO EXISTING CONDUIT WILL BE USED, SEE PROPOSED TRAFFIC SIGNAL SHEETS.

STATE OF TEXAS
SCOTT R. ARNOLD
96782
LICENSED
PROFESSIONAL ENGINEER

Scott R. Arnold, P.E.
12/21/2020

Kimley»Horn F-928

© 2021

Texas Department of Transportation

CONDITION DIAGRAM

AT DALLAS STREET

SHEET 1 OF 5

FED.RD. DIV.NO.	PROJECT ID.	HIGHWAY NO.
6	(SEE TITLE SHEET)	US 84

STATE	DIST.	COUNTY	SHEET NO.
TEXAS	WAC	MCLENNAN	324
CONT.	SECT.	JOB	
0055	15	072	

FILENAME: pw:\\kh-pw.bentley.com:kh-pw-01\Documents\01 Active Projects\TX-FTW-063586010 - US 84 (Waco Drive)\WAC 0055150724 - Design\Plan Set\8. Traffic\US84_COND01_DALLAS.dgn
PLOTTED: 12/21/2020

ELECTRICAL SERVICE DATA												
Electrical Service ID	Plan Sheet Number	Electrical Service Description	Service Conduit Size	Service Conductors No./Size	Safety Switch Amps	Main Ckt. Bkr. Pole/Amps	Two-Pole Contactor Amps	Panelbed/ Loadcenter Amp Rating	Branch Circuit ID	Branch Ckt. Bkr. Pole/Amps	Branch Circuit Amps	KVA Load
ES-02	325	ELEC SRV TY D 120/240 060 (NS)SS(E)PS(U)	2"	3/#6	N/A	2P/60	30	100	Sig. Controller	1P,30	35.5	5.4
									Luminaires	2P,15	4.6	

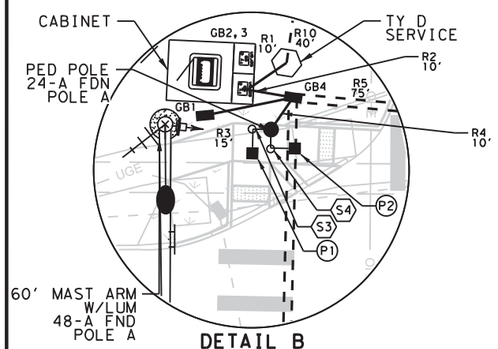

DETAIL B
NW CORNER
US 84 AT DALLAS STREET
NTS

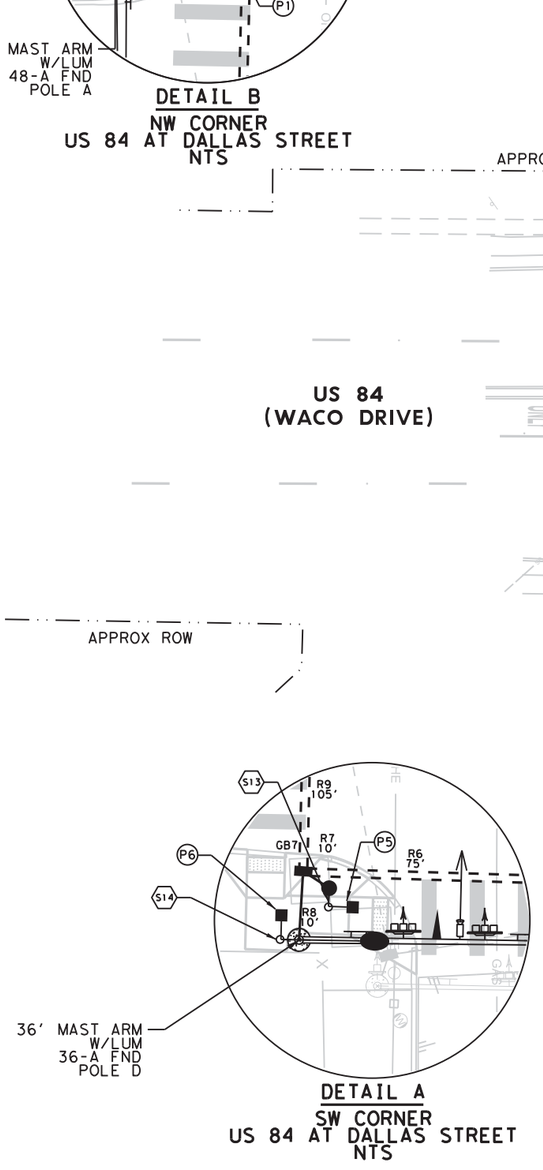

DETAIL A
SW CORNER
US 84 AT DALLAS STREET
NTS

PROPOSED RING AND STRUCTURE

Ø1	Ø2 WALK	Ø3 OL-A	Ø4
Ø5	Ø6 WALK	Ø7	Ø8 WALK

0' 20' 40'

LEGEND

- PROPOSED POINT OF SERVICE
- PROPOSED ELECTRICAL SERVICE
- PROPOSED CONDUIT, PVC
- PROPOSED CONDUIT, BORE
- PROPOSED VIVDS
- PROPOSED GROUND BOX (TY D)
- PROPOSED LED COUNTDOWN & APS
- PROPOSED LUMINAIRE
- PROPOSED SIGNAL POLE ASSEMBLY
- PROPOSED OPTICOM DETECTOR (INSTALL ONLY)
- PROPOSED ITS RADIO ANTENNA
- PROPOSED SIGNAL CABINET

NOTES:

1. SHORT RUNS FROM THE GROUND BOXES TO THE SIGNAL / PEDESTRIAN FOUNDATIONS WILL NOT BE PAID DIRECTLY, BUT SUBSIDIARY TO VARIOUS BID ITEMS. FOR THE SIGNAL POLES, THIS WILL BE 2 (3") CONDUITS.
2. INSTALL TRAFFIC SIGNAL CONTROLLER FOUNDATION PER TS-CF DETAIL.
3. ALL ROAD BORES TO BE (2) 3" SCH 80.

SCOTT R. ARNOLD 96782 LICENSED PROFESSIONAL ENGINEER STATE OF TEXAS

Scott R. Arnold, P.E.

12/21/2020

Kimley»Horn F-928

© 2021

Texas Department of Transportation

PROPOSED TRAFFIC SIGNAL

AT DALLAS STREET

SHEET 2 OF 5

FED. RD. DIV. NO.	PROJECT ID.	HIGHWAY NO.
6	(SEE TITLE SHEET)	US 84

STATE	DIST.	COUNTY	SHEET NO.
TEXAS	WAC	MCLENNAN	325
CONT.	SECT.	JOB	
0055	15	072	

FILENAME: pw:\\kh-pw.bentley.com:kh-pw-01\Documents\01 Active Projects\TX-FTW-063586010 - US 84 (Waco Drive)\WAC 005515072\4 - Design\Plan Sets\8. Traffic\US84_SIG01_DALLAS.dgn
PLOTTED: 12/21/2020

SIGNAL WIRING DETAIL

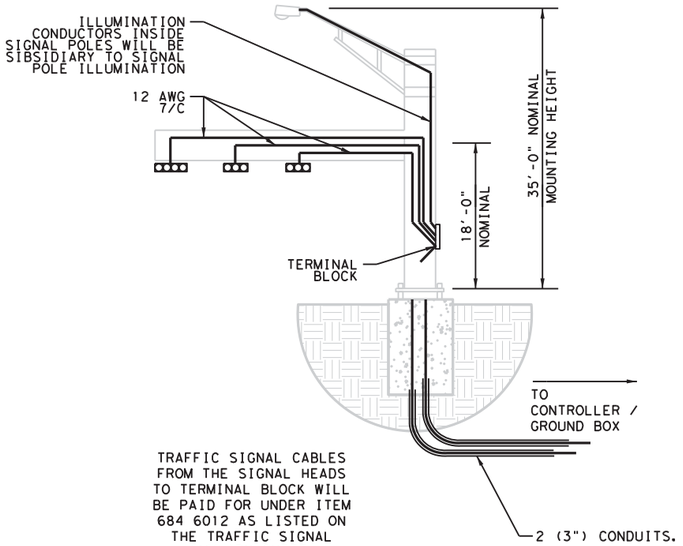

TRAFFIC SIGNAL CABLES FROM THE SIGNAL HEADS TO TERMINAL BLOCK WILL BE PAID FOR UNDER ITEM 684 6012 AS LISTED ON THE TRAFFIC SIGNAL SUMMARY SHEET.

EACH SIGNAL HEAD WILL BE WIRED TO TERMINAL BLOCK.

SIGNAL HEADS

PED SIGNAL HEADS P1, P2, P3, P4, P5, P6

SIGNAL HEADS #1, 5, 8, 12

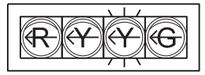

SIGNAL HEADS #2, 3, 6, 7, 9, 10, 11, 13, 14

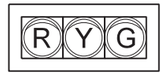

SIGNAL HEAD #4

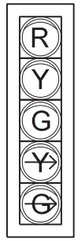

NOTES:

1. TY A SIGNS MOUNTED ON SIGNAL EQUIPMENT IS SHOWN FOR CONTRACTOR INFORMATION ONLY AND SUBSIDIARY TO ITEM 680 6002.

SIGNS

(S3) (S4) (S13)

R10-3E(R)

9" X 15"
TY A
ALUM

(0.94 SQ FT)
EACH

(S7) (S10) (S14)

R10-3E(L)

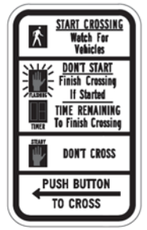

9" X 15"
TY A
ALUM

(0.94 SQ FT)
EACH

(S1) (S8) (S5) (S11)

R10-17T

36" X 42"
TY A
ALUM

(10.5 SQ FT)
EACH

(S2)

D3-1G

84" X 18"
TY A
ALUM

(10.5 SQ FT)
EACH

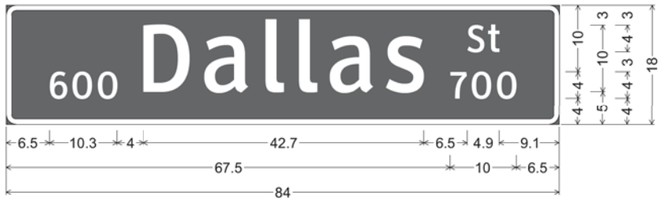

D3-1G;
1.5" Radius, 0.8" Border, White on, Green;
" ", ClearviewHwy-3-W; "600", ClearviewHwy-3-W; "Dallas", ClearviewHwy-3-W;
"St", ClearviewHwy-3-W; "700", ClearviewHwy-3-W;

(S9)

D3-1G

84" X 18"
TY A
ALUM

(10.5 SQ FT)
EACH

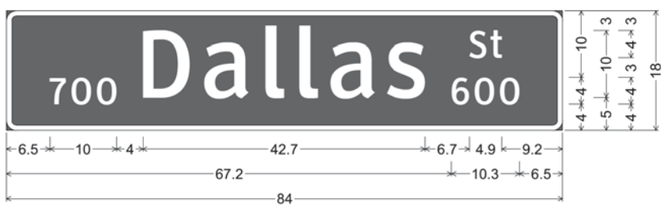

D3-1G;
1.5" Radius, 0.8" Border, White on, Green;
" ", ClearviewHwy-3-W; "700", ClearviewHwy-3-W; "Dallas", ClearviewHwy-3-W;
"St", ClearviewHwy-3-W; "600", ClearviewHwy-3-W;

(S6)

D3-1G

78" X 18"
TY A
ALUM

(9.75 SQ FT)
EACH

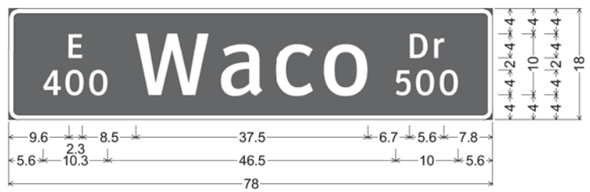

D3-1G;
1.5" Radius, 0.8" Border, White on, Green;
"E", ClearviewHwy-3-W; "400", ClearviewHwy-3-W;
"Waco", ClearviewHwy-3-W; "Dr", ClearviewHwy-3-W;
"500", ClearviewHwy-3-W;

(S12)

D3-1G

78" X 18"
TY A
ALUM

(9.75 SQ FT)
EACH

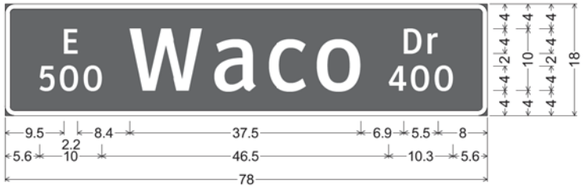

D3-1G;
1.5" Radius, 0.8" Border, White on, Green;
"E", ClearviewHwy-3-W; "500", ClearviewHwy-3-W;
"Waco", ClearviewHwy-3-W; "Dr", ClearviewHwy-3-W;
"400", ClearviewHwy-3-W;

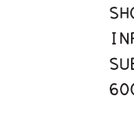

Scott R. Anway, P.E.

12/21/2020

Kimley»Horn F-928

© 2021

Texas Department of Transportation

TRAFFIC SIGNAL SIGNS AND HEADS

AT DALLAS STREET

SHEET 3 OF 5

FED.RD. DIV.NO.	PROJECT ID.	HIGHWAY NO.
6	(SEE TITLE SHEET)	US 84

STATE	DIST.	COUNTY	SHEET NO.
TEXAS	WAC	MCLENNAN	326
CONT.	SECT.	JOB	
0055	15	072	

FILENAME: pw:\\kh-pw.bentley.com:kh-pw-01\Documents\01 Active Projects\TX-FTW-063586010 - US 84 (Waco Drive)\WAC 0055150724 - Design\Plan Set\8. Traffic\US84_SIGSIGN01_DALLAS.dgn
PLOTTED: 12/21/2020

PROJECT	US 84 (0055-15-072)
SHEET	327

			618 6047	618 6029	618 6054	620 6007	620 6008	620 6009	620 6010	684 6007	684 6012	684 6021	684 6049	6306 6007	OPTICOM CABLE	ITS RADIO CABLE
			CONDT (PVC) (SCH 80) (2") (BORE)	CONDT (PVC) (SCH 40) (3")	CONDT (PVC) (SCH 80) (3") (BORE)	ELEC CONDR (NO.8) BARE	ELEC CONDR (NO.8) INSULATED	ELEC CONDR (NO.6) BARE	ELEC CONDR (NO.6) INSULATED	TRF SIG CBL (TY A)(12 AWG)(2 CONDR)	TRF SIG CBL (TY A)(12 AWG)(7 CONDR)	TRF SIG CBL (TY A)(12 AWG)(16 CONDR)	TRF SIG CBL (TY A)(16 AWG)(3 CONDR)	VIVDS CABLING	FOR CONTRACTOR INFO ONLY	FOR CONTRACTOR INFO ONLY
TRF ID	TABLE	Location	LF	LF	LF	LF	LF	LF	LF	LF	LF	LF	LF	LF	LF	LF
CONDUIT R01	CONDUIT	TRENCH		10			20	10	20							
CONDUIT R02-1	CONDUIT	TRENCH		10		10	20			60		40	30	40	40	10
CONDUIT R02-2	CONDUIT	TRENCH		10		10										
CONDUIT R03	CONDUIT	TRENCH		15		15	30					15		15	15	15
CONDUIT R04	CONDUIT	TRENCH		10		10				20			20			
CONDUIT R05-1	CONDUIT	BORE			75	75				75		75		75	75	
CONDUIT R05-2	CONDUIT	BORE			75	75										
CONDUIT R06-1	CONDUIT	BORE			75	75				75		75		75	75	
CONDUIT R06-2	CONDUIT	BORE			75	75										
CONDUIT R07	CONDUIT	TRENCH		10		10				10			10			
CONDUIT R08	CONDUIT	TRENCH		10		10	20			10		10		10	10	
CONDUIT R09-1	CONDUIT	BORE			105	105	210			315		210	105	210	210	
CONDUIT R09-2	CONDUIT	BORE			105	105										
CONDUIT R10*	CONDUIT	BORE	40													
PED POLE A	CONDUIT	IN PED POLE								10			20			
PED POLE B	CONDUIT	IN PED POLE								5			10			
SIGNAL POLE A	CONDUIT	IN SIGNAL POLE									180			50	45	30
SIGNAL POLE B	CONDUIT	IN SIGNAL POLE								5	120		10	50	45	
SIGNAL POLE C	CONDUIT	IN SIGNAL POLE								5	190		10	50	45	
SIGNAL POLE D	CONDUIT	IN SIGNAL POLE								5	135		10	45	40	
Grand Total			40	75	510	575	300	10	20	595	625	425	225	620	600	55

*CONDUIT RUN 10 SHALL INCLUDE A SWEEPING 90° PVC AND SHALL STUB UP AT BOTTOM OF ONCOR POLE.

FILENAME: pw:\\kh-pw.bentley.com:kh-pw-01\Documents\01 Active Projects\TX-FTW-063586010 - US 84 (Waco Drive)\WAC 005515072\4 - Design\Plan Set\8. Traffic\US84_CONSUM01_DALLAS.dgn
PLOTTED: 12/21/2020

Scott R. Arnold, P.E.

12/21/2020

Kimley»Horn F-928

© 2021

Texas Department of Transportation

CONDUIT AND CONDUCTOR SUMMARY

AT DALLAS STREET

SHEET 4 OF 5

FED. RD. DIV. NO.	PROJECT ID.	HIGHWAY NO.
6	(SEE TITLE SHEET)	US 84

STATE	DIST.	COUNTY	SHEET NO.
TEXAS	WAC	MCLENNAN	327
CONT.	SECT.	JOB	
0055	15	072	

PROJECT	US 84 (0055-15-072)												
SHEET	328												
		624 6010	628 6144	680 6002	680 6004	682 6018	688 6001	688 6003	6062 6038	6306 6001	6306 6002	CABINET	OPTICOM	TY A SIGN
		GROUND BOX TY D (162922)W/APRON	ELC SRV TY D 120/240 060(NS)SS(E)PS(U)	INSTALL HWY TRF SIG (ISOLATED)	REMOVING TRAFFIC SIGNALS	PED SIG SEC (LED)(COUNTDOWN)	PED DETECT PUSH BUTTON (APS)	PED DETECTOR CONTROLLER UNIT	ITS RADIO (DUAL)(5 GHZ/5 GHZ)-C-U	VIVDS PROSR SYS	VIVDS CAM ASSY FXD LNS	TxDOT CABINET AND CONTROLLER	FOR CONTRACTOR INFO ONLY	FOR CONTRACTOR INFO ONLY
TRF ID	TABLE	EA	EA	EA	EA	EA	EA	EA	EA	EA	EA	EA	EA	EA
CABINET	MISCELLANEOUS											1		
GROUND BOX	MISCELLANEOUS	7												
ITS RADIO	MISCELLANEOUS								1					
OPTICOM	MISCELLANEOUS												4	
P1	MISCELLANEOUS					1								
P2	MISCELLANEOUS					1								
P3	MISCELLANEOUS					1								
P4	MISCELLANEOUS					1								
P5	MISCELLANEOUS					1								
P6	MISCELLANEOUS					1								
PED	MISCELLANEOUS						6	1						
SERVICE	MISCELLANEOUS		1											
SIGN	MISCELLANEOUS													89
SIGNAL	MISCELLANEOUS			1	1									
VIVDS	MISCELLANEOUS									1	4			
Grand Total		7	1	1	1	6	6	1	1	1	4	1	4	89

PROJECT	US 84 (0055-15-072)									
SHEET	328									
		682 6001	682 6002	682 6003	682 6004	682 6005	682 6006	682 6054	682 6055	682 6056
		VEH SIG SEC (12")LED(GRN)	VEH SIG SEC (12")LED(GRN ARW)	VEH SIG SEC (12")LED(YEL)	VEH SIG SEC (12")LED(YEL ARW)	VEH SIG SEC (12")LED(RED)	VEH SIG SEC (12")LED(RED ARW)	BACKPLATE W/REF BRDR(3 SEC)(VENT)ALUM	BACKPLATE W/REF BRDR(4 SEC)(VENT)ALUM	BACKPLATE W/REF BRDR(5 SEC)(VENT)ALUM
TRF ID	TABLE	EA	EA	EA	EA	EA	EA	EA	EA	EA
SIGNAL HEAD 01	SIGNAL HEAD		1		2		1		1	
SIGNAL HEAD 02	SIGNAL HEAD	1		1		1		1		
SIGNAL HEAD 03	SIGNAL HEAD	1		1		1		1		
SIGNAL HEAD 04	SIGNAL HEAD	1	1	1	1	1				1
SIGNAL HEAD 05	SIGNAL HEAD		1		2		1		1	
SIGNAL HEAD 06	SIGNAL HEAD	1		1		1		1		
SIGNAL HEAD 07	SIGNAL HEAD	1		1		1		1		
SIGNAL HEAD 08	SIGNAL HEAD		1		2		1		1	
SIGNAL HEAD 09	SIGNAL HEAD	1		1		1		1		
SIGNAL HEAD 10	SIGNAL HEAD	1		1		1		1		
SIGNAL HEAD 11	SIGNAL HEAD	1		1		1		1		
SIGNAL HEAD 12	SIGNAL HEAD		1		2		1		1	
SIGNAL HEAD 13	SIGNAL HEAD	1		1		1		1		
SIGNAL HEAD 14	SIGNAL HEAD	1		1		1		1		
Grand Total		10	5	10	9	10	4	9	4	1

PROJECT	US 84 (0055-15-072)				
SHEET	328				
		686 6037	686 6039	686 6049	686 6063	687 6001
		INS TRF SIG PL AM(S)1 ARM(36')	INS TRF SIG PL AM(S)1 ARM(36')LUM	INS TRF SIG PL AM(S)1 ARM(48')	INS TRF SIG PL AM(S)1 ARM(60')LUM	PED POLE ASSEMBLY
TRF ID	TABLE	EA	EA	EA	EA	EA
PED POLE A	POLE					1
PED POLE B	POLE					1
TRAFFIC SIGNAL POLE A	POLE				1	
TRAFFIC SIGNAL POLE B	POLE	1				
TRAFFIC SIGNAL POLE C	POLE			1		
TRAFFIC SIGNAL POLE D	POLE		1			
Grand Total		1	1	1	1	2

PROJECT	US 84 (0055-15-072)			
SHEET	328			
		PED POLE FND	416 6032	416 6034
		FOR CONTRACTOR INFO ONLY	DRILL SHAFT (TRF SIG POLE) (36 IN)	DRILL SHAFT (TRF SIG POLE) (48 IN)
TRF ID	TABLE	LF	LF	LF
PED POLE FND A	FOUNDATIONS	5.7		
PED POLE FND B	FOUNDATIONS	5.7		
SIGNAL POLE FND A	FOUNDATIONS			21.9
SIGNAL POLE FND B	FOUNDATIONS		13.2	
SIGNAL POLE FND C	FOUNDATIONS		13.2	
SIGNAL POLE FND D	FOUNDATIONS		13.2	
Grand Total		11.4	39.6	21.9

Scott R. Arnold, P.E.

12/21/2020

Kimley»Horn F-928

© 2021

Texas Department of Transportation

TRAFFIC SIGNAL SUMMARY

AT DALLAS STREET

SHEET 5 OF 5

FED.RD. DIV.NO.	PROJECT ID.	HIGHWAY NO.
6	(SEE TITLE SHEET)	US 84

STATE	DIST.	COUNTY	SHEET NO.
TEXAS	WAC	MCLENNAN	328
CONT.	SECT.	JOB	
0055	15	072	

FILENAME: pw:\\kh-pw.bentley.com:kh-pw-01\Documents\01 Active Projects\TX-FTW-063586010 - US 84 (Waco Drive)\WAC 005515072\4 - Design\Plan Set\8. Traffic\US84_SIGSUM01_DALLAS.dgn
PLOTTED: 12/21/2020

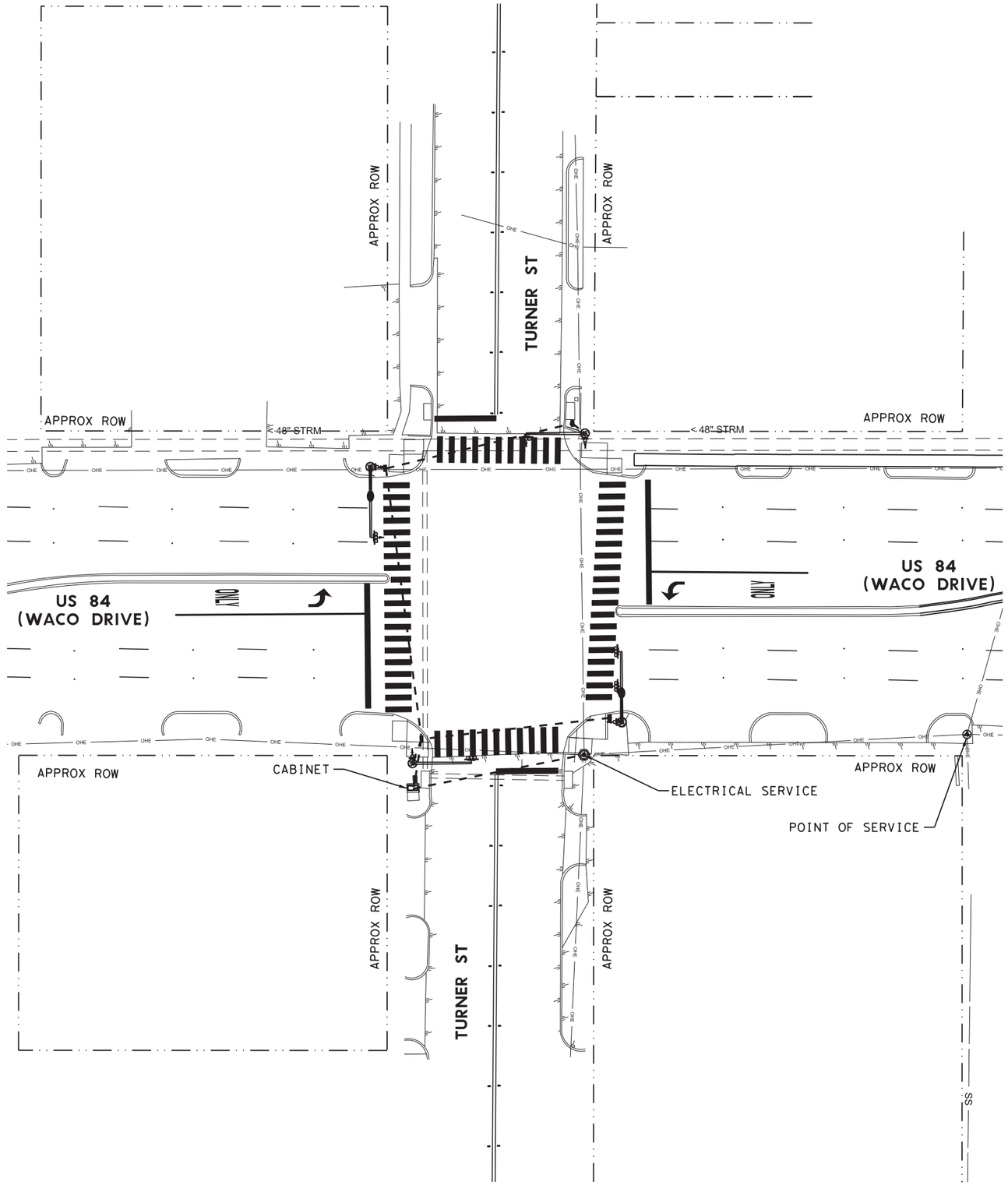

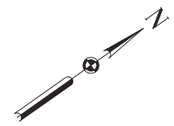

LEGEND

- POINT OF SERVICE
- ELECTRICAL SERVICE
- CONDUIT, PVC
- GROUND BOX

NOTES

1. THE LOCATIONS SHOWN AS EXISTING CONDUIT RUNS ARE APPROXIMATE. THE EXACT LOCATION WILL BE DETERMINED IN THE FIELD. NO EXISTING CONDUIT WILL BE USED, SEE PROPOSED TRAFFIC SIGNAL SHEETS.

STATE OF TEXAS
SCOTT R ARNOLD
96782
LICENSED
PROFESSIONAL ENGINEER

Scott R Arnold, P.E.
12/21/2020

Kimley»Horn F-928

© 2021

Texas Department of Transportation

CONDITION DIAGRAM

AT TURNER STREET

SHEET 1 OF 5

FED.RD. DIV.NO.	PROJECT ID.	HIGHWAY NO.
6	(SEE TITLE SHEET)	US 84

STATE	DIST.	COUNTY	SHEET NO.
TEXAS	WAC	MCLENNAN	329
CONT.	SECT.	JOB	
0055	15	072	

FILENAME: pw:\\kh-pw.bentley.com:kh-pw-01\Documents\01 Active Projects\TX-FTW-063586010 - US 84 (Waco Drive)\WAC 005515072\4 - Design\Plan Set\8. Traffic\US84_EXCON_TURN.dgn
PLOTTED: 12/21/2020

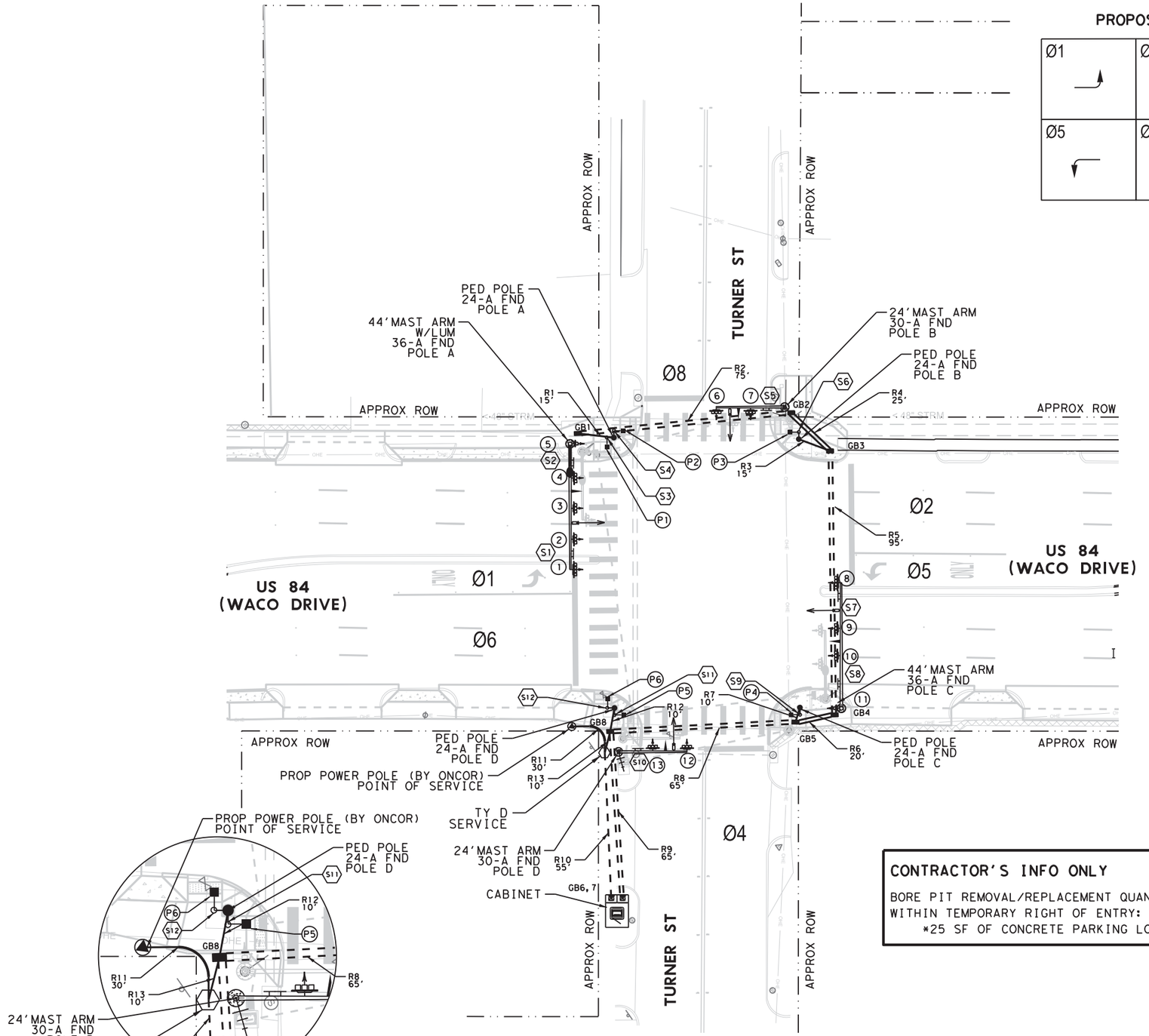

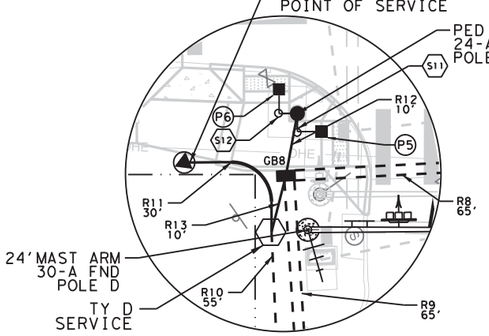

DETAIL A
SW CORNER
US 84 AT TURNER STREET
NTS

PROPOSED RING AND STRUCTURE

Ø1	Ø2 WALK	Ø3 NOT USED	Ø4 WALK
Ø5	Ø6 WALK	Ø7 NOT USED	Ø8 WALK

0' 20' 40'

LEGEND

- PROPOSED POINT OF SERVICE
- PROPOSED ELECTRICAL SERVICE
- PROPOSED CONDUIT, PVC
- PROPOSED CONDUIT, BORE
- PROPOSED VIVDS
- PROPOSED GROUND BOX (TY D)
- PROPOSED LED COUNTDOWN & APS
- PROPOSED LUMINAIRE
- PROPOSED SIGNAL POLE ASSEMBLY
- PROPOSED OPTICOM DETECTOR (INSTALL ONLY)
- PROPOSED ITS RADIO ANTENNA
- PROPOSED SIGNAL CABINET

NOTES:

1. SHORT RUNS FROM THE GROUND BOXES TO THE SIGNAL / PEDESTRIAN FOUNDATIONS WILL NOT BE PAID DIRECTLY, BUT SUBSIDIARY TO VARIOUS BID ITEMS. FOR THE SIGNAL POLES, THIS WILL BE 2 (3") CONDUITS.
2. INSTALL TRAFFIC SIGNAL CONTROLLER FOUNDATION PER TS-CF DETAIL.
3. ALL ROAD BORES TO BE (2) 3" SCH 80.

CONTRACTOR'S INFO ONLY

BORE PIT REMOVAL/REPLACEMENT QUANTITIES WITHIN TEMPORARY RIGHT OF ENTRY:
*25 SF OF CONCRETE PARKING LOT ON NE CORNER

ELECTRICAL SERVICE DATA

Electrical Service ID	Plan Sheet Number	Electrical Service Description	Service Conduit Size	Service Conductors No./Size	Safety Switch Amps	Main Ckt. Bkr. Pole/Amps	Two-Pole Contactor Amps	Panelbed/ Loadcenter Amp Rating	Branch Circuit ID	Branch Ckt. Bkr. Pole/Amps	Branch Circuit Amps	KVA Load
ES-21	330	ELEC SRV TY D 120/240 060 (NS)SS(E)PS(U)	2"	3/#6	N/A	2P/60	30	100	Sig. Controller	1P/30	35.7	4.6
									Luminaires	2P/15	2.3	

STATE OF TEXAS
SCOTT R. ARNOLD
96782
LICENSED
PROFESSIONAL
ENGINEER

Scott R. Arnold, P.E.
03/01/2021

Kimley»Horn F-928

© 2021
Texas Department of Transportation

PROPOSED TRAFFIC SIGNAL

AT TURNER STREET

SHEET 2 OF 5

FED. RD. DIV. NO.	PROJECT ID.		HIGHWAY NO.
6	(SEE TITLE SHEET)		US 84
STATE	DIST.	COUNTY	SHEET NO.
TEXAS	WAC	MCLENNAN	330
CONT.	SECT.	JOB	
0055	15	072	

FILENAME: pw:\\kh-pw.bentley.com:kh-pw-01\Documents\01 Active Projects\TX-FTW-063586010 - US 84 (Waco Drive)\WAC 005515072\4 - Design\Plan Set\8. Traffic\US84_SIG01_TURN.dgn
PLOTTED: 12/21/2020

SIGNAL WIRING DETAIL

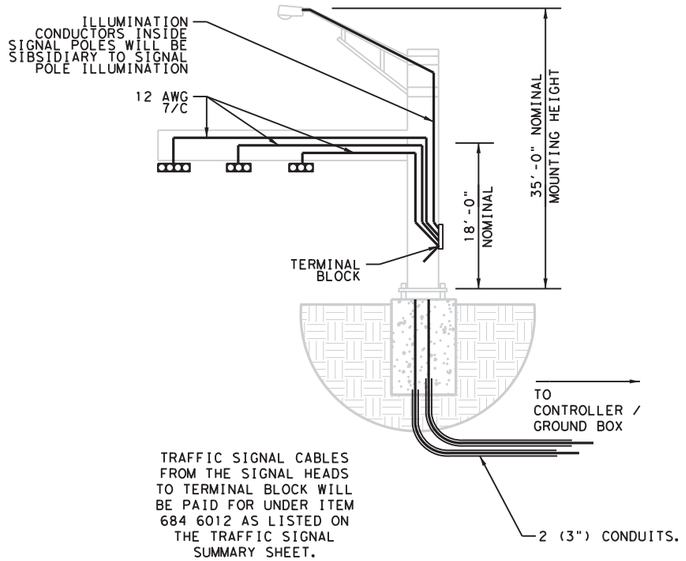

TRAFFIC SIGNAL CABLES FROM THE SIGNAL HEADS TO TERMINAL BLOCK WILL BE PAID FOR UNDER ITEM 684 6012 AS LISTED ON THE TRAFFIC SIGNAL SUMMARY SHEET.

EACH SIGNAL HEAD WILL BE WIRED TO TERMINAL BLOCK.

SIGNAL HEADS

PED SIGNAL HEADS P1, P2, P3, P4, P5, P6

SIGNAL HEADS #1, 8

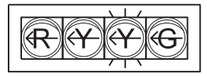

SIGNAL HEADS #2, 3, 4, 6, 7, 9, 10, 12, 13

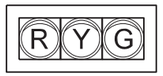

SIGNAL HEADS #5, 11

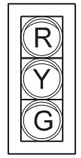

NOTES:

1. TY A SIGNS MOUNTED ON SIGNAL EQUIPMENT IS SHOWN FOR CONTRACTOR INFORMATION ONLY AND SUBSIDIARY TO ITEM 680 6002.

SIGNS

S3 S6 S11

R10-3E(R)

9" X 15"
TY A
ALUM

(0.94 SQ FT)
EACH

S4 S9 S12

R10-3E(L)

9" X 15"
TY A
ALUM

(0.94 SQ FT)
EACH

S1 S7

R10-17T

36" X 42"
TY A
ALUM

(10.5 SQ FT)
EACH

S8

D3-1G

84" X 18"
TY A
ALUM

(10.5 SQ FT)
EACH

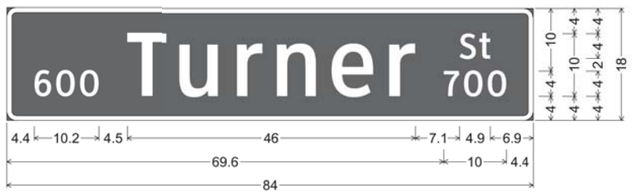

D3-1G;
1.5" Radius, 0.8" Border, White on, Green;
"600", ClearviewHwy-3-W; "Turner", ClearviewHwy-3-W; "St", ClearviewHwy-3-W;
"700", ClearviewHwy-3-W;

S2

D3-1G

84" X 18"
TY A
ALUM

(10.5 SQ FT)
EACH

D3-1G;
1.5" Radius, 0.8" Border, White on, Green;
"700", ClearviewHwy-3-W; "Turner", ClearviewHwy-3-W; "St", ClearviewHwy-3-W;
"600", ClearviewHwy-3-W;

S5

D3-1G

78" X 18"
TY A
ALUM

(9.75 SQ FT)
EACH

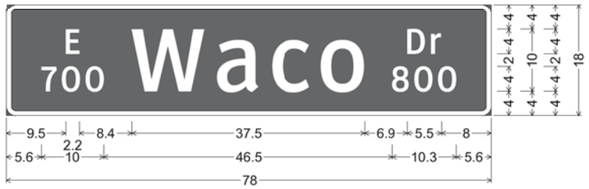

D3-1G;
1.5" Radius, 0.8" Border, White on, Green;
"E", ClearviewHwy-3-W; "700", ClearviewHwy-3-W;
"Waco", ClearviewHwy-3-W; "Dr", ClearviewHwy-3-W;
"800", ClearviewHwy-3-W;

S10

D3-1G

78" X 18"
TY A
ALUM

(9.75 SQ FT)
EACH

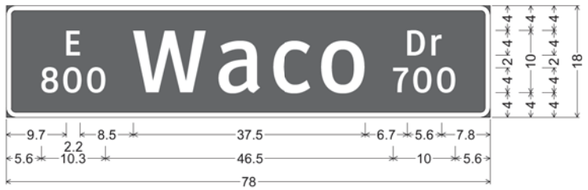

D3-1G;
1.5" Radius, 0.8" Border, White on, Green;
"E", ClearviewHwy-3-W; "800", ClearviewHwy-3-W;
"Waco", ClearviewHwy-3-W; "Dr", ClearviewHwy-3-W;
"700", ClearviewHwy-3-W;

Scott R. Arnold, P.E.
12/21/2020

Kimley»Horn F-928

© 2021

Texas Department of Transportation

TRAFFIC SIGNAL SIGNS AND HEADS

AT TURNER STREET

SHEET 3 OF 5

FED.RD. DIV.NO.	PROJECT ID.	HIGHWAY NO.
6	(SEE TITLE SHEET)	US 84

STATE	DIST.	COUNTY	SHEET NO.
TEXAS	WAC	MCLENNAN	331
CONT.	SECT.	JOB	
0055	15	072	

FILENAME: pw:\\kh-pw.bentley.com:kh-pw-01\Documents\01 Active Projects\TX-FTW-063586010 - US 84 (Waco Drive)\WAC 0055150724 - Design\Plan Set\8. Traffic\US84_SIGSIGN01_TURN.dgn
PLOTTED: 12/21/2020

PROJECT	US 84 (0055-15-072)															
SHEET	332															
			618 6046	618 6029	618 6054	620 6007	620 6008	620 6009	620 6010	684 6007	684 6012	684 6021	684 6049	6306 6007	OPTICOM CABLE	ITS RADIO CABLE
			CONDT (PVC) (SCH 80) (2")	CONDT (PVC) (SCH 40) (3")	CONDT (PVC) (SCH 80) (3") (BORE)	ELEC CONDR (NO.8) BARE	ELEC CONDR (NO.8) INSULATED	ELEC CONDR (NO.6) BARE	ELEC CONDR (NO.6) INSULATED	TRF SIG CBL (TY A)(12 AWG)(2 CONDR)	TRF SIG CBL (TY A)(12 AWG)(7 CONDR)	TRF SIG CBL (TY A)(12 AWG)(16 CONDR)	TRF SIG CBL (TY A)(16 AWG)(3 CONDR)	VIVDS CABLING	FOR CONTRACTOR INFO ONLY	FOR CONTRACTOR INFO ONLY
TRF ID	TABLE	Location	LF	LF	LF	LF	LF	LF	LF	LF	LF	LF	LF	LF	LF	LF
CONDUIT R01	CONDUIT	TRENCH		15		15				30			30			
CONDUIT R02-1	CONDUIT	BORE			75	75	150			150		75	150	75	75	
CONDUIT R02-2	CONDUIT	BORE			75	75										
CONDUIT R03	CONDUIT	TRENCH		15		15				15			15			
CONDUIT R04-1	CONDUIT	TRENCH		25		25	50			50		50	50	50	50	
CONDUIT R04-2	CONDUIT	TRENCH		25		25										
CONDUIT R05-1	CONDUIT	BORE			95	95	190									
CONDUIT R05-2	CONDUIT	BORE			95	95				285		190	285	190	190	
CONDUIT R06-1	CONDUIT	TRENCH		20		20	40									
CONDUIT R06-2	CONDUIT	TRENCH		20		20				60		60	60	60	60	
CONDUIT R07	CONDUIT	TRENCH		10		10				10			10			
CONDUIT R08-1	CONDUIT	BORE			65	65	130			260		195	260	195	195	
CONDUIT R08-2	CONDUIT	BORE			65	65										
CONDUIT R09-1	CONDUIT	BORE			65	65	130			390		260	390	260	260	65
CONDUIT R09-2	CONDUIT	BORE			65	65										
CONDUIT R10	CONDUIT	BORE			55		110	55	110							
CONDUIT R11*	CONDUIT	TRENCH	30													
CONDUIT R12	CONDUIT	TRENCH		10		10				20			20			
CONDUIT R13	CONDUIT	TRENCH		10			20	10	20							
PED POLE A	CONDUIT	IN PED POLE								10			20			
PED POLE B	CONDUIT	IN PED POLE								5			10			
PED POLE C	CONDUIT	IN PED POLE								5			10			
PED POLE D	CONDUIT	IN PED POLE								10			20			
SIGNAL POLE A	CONDUIT	IN SIGNAL POLE									235			60	50	
SIGNAL POLE B	CONDUIT	IN SIGNAL POLE									80			45	40	
SIGNAL POLE C	CONDUIT	IN SIGNAL POLE									180			60	50	
SIGNAL POLE D	CONDUIT	IN SIGNAL POLE									80			50	45	30
Grand Total			30	150	655	740	820	65	130	1300	575	830	1330	1045	1015	95

*CONDUIT RUN 11 SHALL INCLUDE A SWEEPING 90° PVC AND SHALL STUB UP AT BOTTOM OF ONCOR POLE.

FILENAME: pw:\\kh-pw.bentley.com:kh-pw-01\Documents\01 Active Projects\TX-FTW-063586010 - US 84 (Waco Drive)\WAC 0055150721\4 - Design\Plan Set\8. Traffic\US84_CONSUM01_TURN.dgn
PLOTTED: 12/21/2020

Scott R Arnold, P.E.

12/21/2020

Kimley»Horn F-928

© 2021

Texas Department of Transportation

CONDUIT AND CONDUCTOR SUMMARY

AT TURNER STREET

SHEET 4 OF 5

FED.RD. DIV.NO.	PROJECT ID.		HIGHWAY NO.
6	(SEE TITLE SHEET)		US 84
STATE	DIST.	COUNTY	SHEET NO.
TEXAS	WAC	MCLENNAN	332
CONT.	SECT.	JOB	
0055	15	072	

PROJECT	US 84 (0055-15-072)												
SHEET	333												
		624 6010	628 6144	680 6002	680 6004	682 6018	688 6001	688 6003	6062 6038	6306 6001	6306 6002	CABINET	OPTICOM	TY A SIGN
		GROUND BOX TY D (162922)W/APRON	ELC SRV TY D 120/240 060(NS)SS(E)PS(U)	INSTALL HWY TRF SIG (ISOLATED)	REMOVING TRAFFIC SIGNALS	PED SIG SEC (LED)(COUNTDOWN)	PED DETECT PUSH BUTTON (APS)	PED DETECTOR CONTROLLER UNIT	ITS RADIO (DUAL)(5 GHZ/5 GHZ)-C-U	VIVDS PROSR SYS	VIVDS CAM ASSY FXD LNS	TxDOT CABINET AND CONTROLLER	FOR CONTRACTOR INFO ONLY	FOR CONTRACTOR INFO ONLY
TRF ID	TABLE	EA	EA	EA	EA	EA	EA	EA	EA	EA	EA	EA	EA	EA
CABINET	MISCELLANEOUS											1		
GROUND BOX	MISCELLANEOUS	8												
ITS RADIO	MISCELLANEOUS								1					
OPTICOM	MISCELLANEOUS												4	
P1	MISCELLANEOUS					1								
P2	MISCELLANEOUS					1								
P3	MISCELLANEOUS					1								
P4	MISCELLANEOUS					1								
P5	MISCELLANEOUS					1								
P6	MISCELLANEOUS					1								
PED	MISCELLANEOUS						6	1						
SERVICE	MISCELLANEOUS		1											
SIGN	MISCELLANEOUS													70
SIGNAL	MISCELLANEOUS			1	1									
VIVDS	MISCELLANEOUS									1	4			
Grand Total		8	1	1	1	6	6	1	1	1	4	1	4	70

PROJECT	US 84 (0055-15-072)								
SHEET	333								
		682 6001	682 6002	682 6003	682 6004	682 6005	682 6006	682 6054	682 6055
		VEH SIG SEC (12")LED(GRN)	VEH SIG SEC (12")LED(GRN ARW)	VEH SIG SEC (12")LED(YEL)	VEH SIG SEC (12")LED(YEL ARW)	VEH SIG SEC (12")LED(RED)	VEH SIG SEC (12")LED(RED ARW)	BACKPLATE W/REF BRDR(3 SEC)(VENT)ALUM	BACKPLATE W/REF BRDR(4 SEC)(VENT)ALUM
TRF ID	TABLE	EA	EA	EA	EA	EA	EA	EA	EA
SIGNAL HEAD 01	SIGNAL HEAD		1		2		1		1
SIGNAL HEAD 02	SIGNAL HEAD	1		1		1		1	
SIGNAL HEAD 03	SIGNAL HEAD	1		1		1		1	
SIGNAL HEAD 04	SIGNAL HEAD	1		1		1		1	
SIGNAL HEAD 05	SIGNAL HEAD	1		1		1		1	
SIGNAL HEAD 06	SIGNAL HEAD	1		1		1		1	
SIGNAL HEAD 07	SIGNAL HEAD	1		1		1		1	
SIGNAL HEAD 08	SIGNAL HEAD		1		2		1		1
SIGNAL HEAD 09	SIGNAL HEAD	1		1		1		1	
SIGNAL HEAD 10	SIGNAL HEAD	1		1		1		1	
SIGNAL HEAD 11	SIGNAL HEAD	1		1		1		1	
SIGNAL HEAD 12	SIGNAL HEAD	1		1		1		1	
SIGNAL HEAD 13	SIGNAL HEAD	1		1		1		1	
Grand Total		11	2	11	4	11	2	11	2

PROJECT	US 84 (0055-15-072)				
SHEET	333				
		686 6025	686 6045	686 6047	687 6001
		INS TRF SIG PL AM (S)1 ARM(24')	INS TRF SIG PL AM(S)1 ARM(44')	INS TRF SIG PL AM(S)1 ARM(44')LUM	PED POLE ASSEMBLY
TRF ID	TABLE	EA	EA	EA	EA
PED POLE A	POLE				1
PED POLE B	POLE				1
PED POLE C	POLE				1
PED POLE D	POLE				1
TRAFFIC SIGNAL POLE A	POLE			1	
TRAFFIC SIGNAL POLE B	POLE	1			
TRAFFIC SIGNAL POLE C	POLE		1		
TRAFFIC SIGNAL POLE D	POLE	1			
Grand Total		2	1	1	4

PROJECT	US 84 (0055-15-072)			
SHEET	333			
		PED POLE FND	416 6031	416 6032
		FOR CONTRACTOR INFO ONLY	DRILL SHAFT (TRF SIG POLE) (30 IN)	DRILL SHAFT (TRF SIG POLE) (36 IN)
TRF ID	TABLE	LF	LF	LF
PED POLE FND A	FOUNDATIONS	5.7		
PED POLE FND B	FOUNDATIONS	5.7		
PED POLE FND C	FOUNDATIONS	5.7		
PED POLE FND D	FOUNDATIONS	5.7		
SIGNAL POLE FND A	FOUNDATIONS			13.2
SIGNAL POLE FND B	FOUNDATIONS		11.3	
SIGNAL POLE FND C	FOUNDATIONS			13.2
SIGNAL POLE FND D	FOUNDATIONS		11.3	
Grand Total		22.8	22.6	26.4

FILENAME: pw:\\kh-pw.bentley.com:kh-pw-01\Documents\01 Active Projects\TX-FTW-063586010 - US 84 (Waco Drive)\WAC 005515072\4 - Design\Plan Set\8. Traffic\US84_SIGSUM01_TURN.dgn
PLOTTED: 12/21/2020

STATE OF TEXAS
SCOTT R. ARNOLD
96782
LICENSED
PROFESSIONAL ENGINEER

Scott R. Arnold, P.E.

12/21/2020

Kimley»Horn F-928

© 2021

Texas Department of Transportation

TRAFFIC SIGNAL SUMMARY

AT TURNER STREET

SHEET 5 OF 5

FED.RD. DIV.NO.	PROJECT ID.	HIGHWAY NO.
6	(SEE TITLE SHEET)	US 84

STATE	DIST.	COUNTY	SHEET NO.
TEXAS	WAC	MCLENNAN	333
CONT.	SECT.	JOB	
0055	15	072	

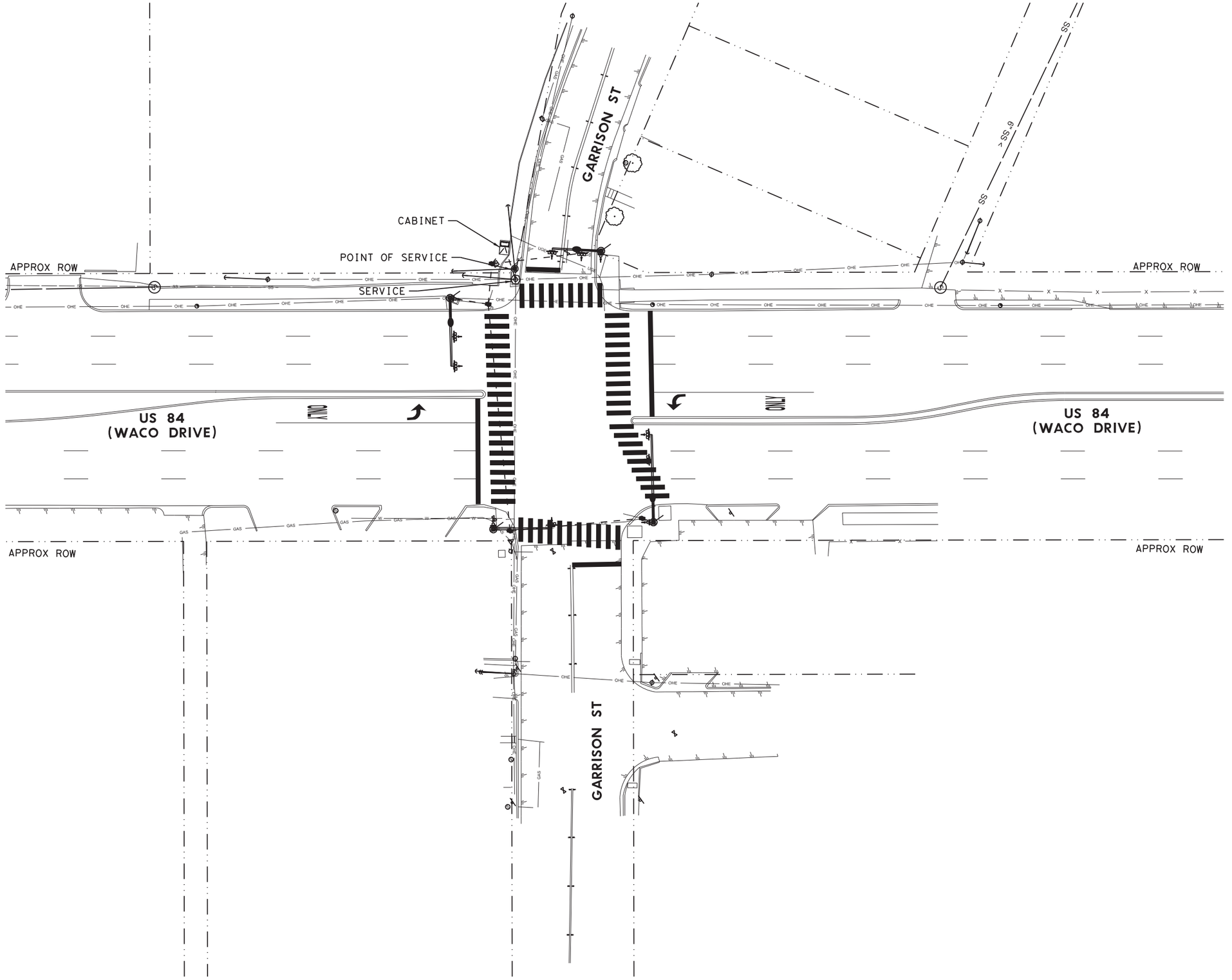

LEGEND

- POINT OF SERVICE
- ELECTRICAL SERVICE
- CONDUIT, PVC
- GROUND BOX

NOTES

1. THE LOCATIONS SHOWN AS EXISTING CONDUIT RUNS ARE APPROXIMATE. THE EXACT LOCATION WILL BE DETERMINED IN THE FIELD. NO EXISTING CONDUIT WILL BE USED, SEE PROPOSED TRAFFIC SIGNAL SHEETS.

SCOTT A. ARNOLD 96782 LICENSED PROFESSIONAL ENGINEER STATE OF TEXAS

Scott A. Arnold, P.E.

12/21/2020

Kimley»Horn F-928

© 2021

Texas Department of Transportation

CONDITION DIAGRAM

AT GARRISON STREET

SHEET 1 OF 5

FED.RD. DIV.NO.	PROJECT ID.	HIGHWAY NO.
6	(SEE TITLE SHEET)	US 84

STATE	DIST.	COUNTY	SHEET NO.
TEXAS	WAC	MCLENNAN	334
CONT.	SECT.	JOB	
0055	15	072	

FILENAME: pw:\\kh-pw.bentley.com:kh-pw-01\Documents\01 Active Projects\TX-FTW-063586010 - US 84 (Waco Drive)\WAC 005515072\4 - Design\Plan Set\8. Traffic\US84_EXCON_GAR.dgn
PLOTTED: 12/21/2020

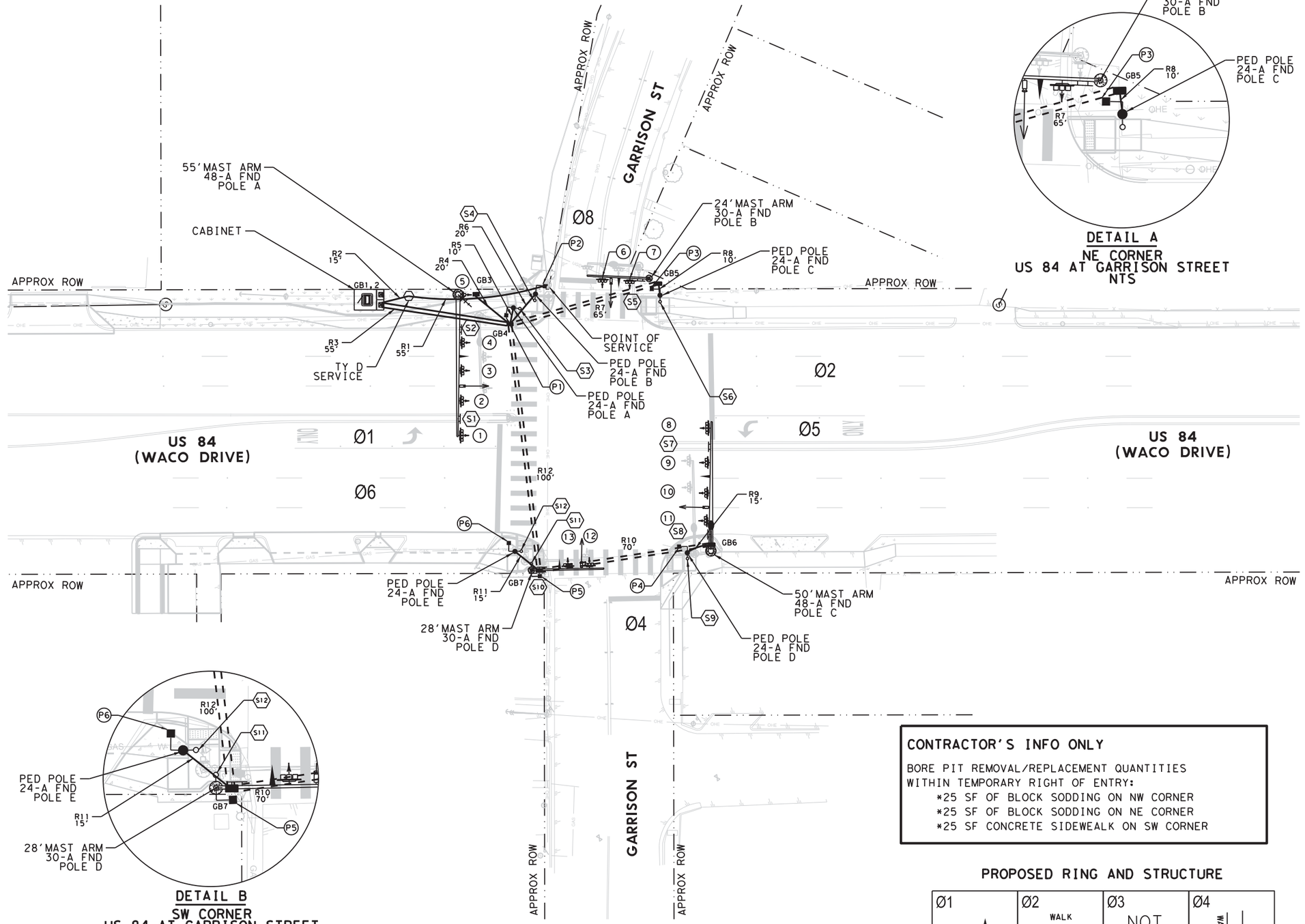

DETAIL A
NE CORNER
US 84 AT GARRISON STREET
NTS

DETAIL B
SW CORNER
US 84 AT GARRISON STREET
NTS

LEGEND

- EXISTING POINT OF SERVICE
- PROPOSED ELECTRICAL SERVICE
- PROPOSED CONDUIT, PVC
- PROPOSED CONDUIT, BORE
- PROPOSED VIVDS
- PROPOSED GROUND BOX (TY D)
- PROPOSED LED COUNTDOWN & APS
- PROPOSED LUMINAIRE
- PROPOSED SIGNAL POLE ASSEMBLY
- PROPOSED OPTICOM DETECTOR (INSTALL ONLY)
- PROPOSED ITS RADIO ANTENNA
- PROPOSED SIGNAL CABINET

NOTES

1. SHORT RUNS FROM THE GROUND BOXES TO THE SIGNAL / PEDESTRIAN FOUNDATIONS WILL NOT BE PAID DIRECTLY, BUT SUBSIDIARY TO VARIOUS BID ITEMS. FOR THE SIGNAL POLES, THIS WILL BE 2 (3") CONDUITS.
2. INSTALL TRAFFIC SIGNAL CONTROLLER FOUNDATION PER TS-CF DETAIL.
3. ALL ROAD BORES TO BE (2) 3" SCH 80.

CONTRACTOR'S INFO ONLY

BORE PIT REMOVAL/REPLACEMENT QUANTITIES WITHIN TEMPORARY RIGHT OF ENTRY:
- *25 SF OF BLOCK SODDING ON NW CORNER
- *25 SF OF BLOCK SODDING ON NE CORNER
- *25 SF CONCRETE SIDEWEALK ON SW CORNER

PROPOSED RING AND STRUCTURE

Ø1	Ø2 WALK ←	Ø3 NOT USED	Ø4 WALK ↓
Ø5	Ø6 → WALK	Ø7 NOT USED	Ø8 ↑ WALK

ELECTRICAL SERVICE DATA

Electrical Service ID	Plan Sheet Number	Electrical Service Description	Service Conduit Size	Service Conductors No./Size	Safety Switch Amps	Main Ckt. Bkr. Pole/Amps	Two-Pole Contactor Amps	Panelbed/ Loadcenter Amp Rating	Branch Circuit ID	Branch Ckt. Bkr. Pole/Amps	Branch Circuit Amps	KVA Load
ES-22	335	ELEC SRV TY D 120/240 060 (NS)SS(E)PS(U)	2"	3/#6	N/A	2P/60	30	100	Sig. Controller	1P/30	33.3	4.0

Scott R. Arnold, P.E.
03/01/2021

Kimley»Horn F-928

© 2021

Texas Department of Transportation

PROPOSED TRAFFIC SIGNAL

AT GARRISON STREET

SHEET 2 OF 5

FED.RD. DIV.NO.	PROJECT ID.	HIGHWAY NO.
6	(SEE TITLE SHEET)	US 84

STATE	DIST.	COUNTY	SHEET NO.
TEXAS	WAC	MCLENNAN	335
CONT.	SECT.	JOB	
0055	15	072	

FILENAME: pw:\\kh-pw.bentley.com:kh-pw-01\Documents\01 Active Projects\TX-FTW-063586010 - US 84 (Waco Drive)\WAC 0055150724 - Design\Plan Set\8. Traffic\US84_SIG01_GAR.dgn
PLOTTED: 12/21/2020

SIGNAL WIRING DETAIL

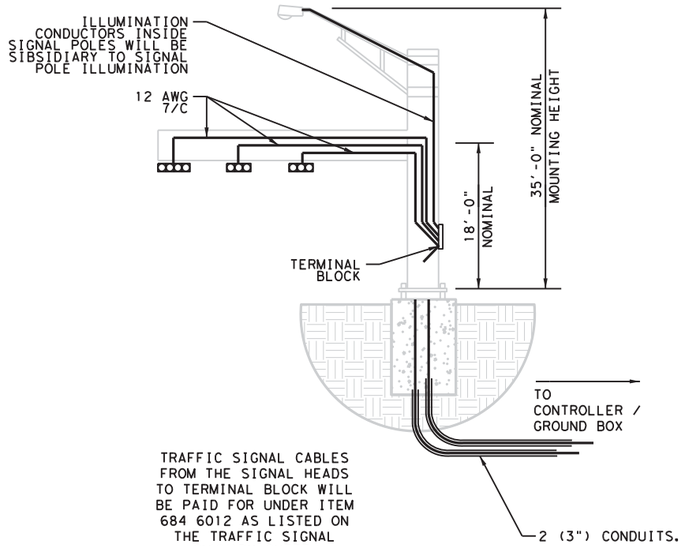

TRAFFIC SIGNAL CABLES FROM THE SIGNAL HEADS TO TERMINAL BLOCK WILL BE PAID FOR UNDER ITEM 684 6012 AS LISTED ON THE TRAFFIC SIGNAL SUMMARY SHEET.

EACH SIGNAL HEAD WILL BE WIRED TO TERMINAL BLOCK.

SIGNAL HEADS

PED SIGNAL HEADS P1, P2, P3, P4, P5, P6

SIGNAL HEADS #1, 8

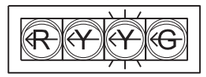

SIGNAL HEADS #2, 3, 4, 6, 7, 9, 10, 11, 12, 13

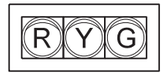

SIGNAL HEAD #5

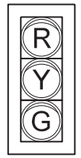

NOTES:

1. TY A SIGNS MOUNTED ON SIGNAL EQUIPMENT IS SHOWN FOR CONTRACTOR INFORMATION ONLY AND SUBSIDIARY TO ITEM 680 6002.

SIGNS

S4 S12

R10-3E(R)

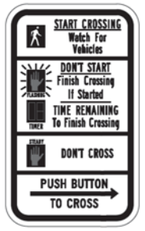

9" X 15"
TY A
ALUM

(0.94 SQ FT)
EACH

S3 S6
S9 S11

R10-3E(L)

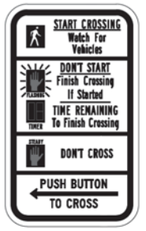

9" X 15"
TY A
ALUM

(0.94 SQ FT)
EACH

S1 S7

R10-17T

36" X 42"
TY A
ALUM

(10.5 SQ FT)
EACH

S2

D3-1G

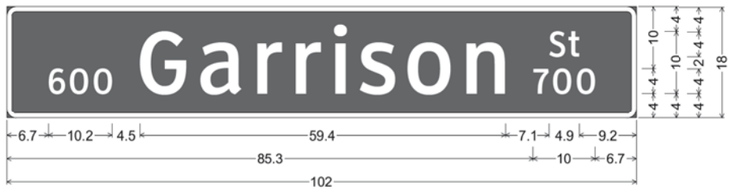

102" X 18"
TY A
ALUM

(12.75 SQ FT)
EACH

D3-1G;
1.5" Radius, 0.8" Border, White on, Green;
"600", ClearviewHwy-3-W; "Garrison", ClearviewHwy-3-W; "St", ClearviewHwy-3-W;
"700", ClearviewHwy-3-W;

S8

D3-1G

102" X 18"
TY A
ALUM

(12.75 SQ FT)
EACH

D3-1G;
1.5" Radius, 0.8" Border, White on, Green;
"700", ClearviewHwy-3-W; "Garrison", ClearviewHwy-3-W; "St", ClearviewHwy-3-W;
"600", ClearviewHwy-3-W;

S5

D3-1G

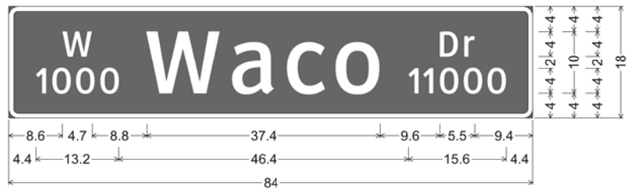

84" X 18"
TY A
ALUM

(10.5 SQ FT)
EACH

D3-1G;
1.5" Radius, 0.8" Border, White on, Green;
"W", ClearviewHwy-3-W; "1000", ClearviewHwy-3-W; "Waco", ClearviewHwy-3-W;
"Dr", ClearviewHwy-3-W; "11000", ClearviewHwy-3-W;

S10

D3-1G

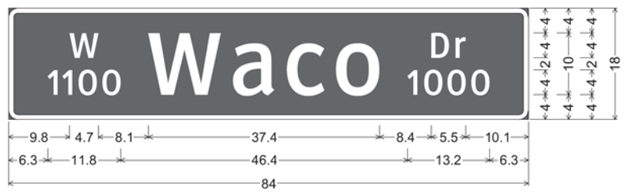

84" X 18"
TY A
ALUM

(10.5 SQ FT)
EACH

D3-1G;
1.5" Radius, 0.8" Border, White on, Green;
"W", ClearviewHwy-3-W; "1100", ClearviewHwy-3-W; "Waco", ClearviewHwy-3-W;
"Dr", ClearviewHwy-3-W; "1000", ClearviewHwy-3-W;

Scott R. Arnold, P.E.

12/21/2020

Kimley»Horn F-928

© 2021

Texas Department of Transportation

TRAFFIC SIGNAL SIGNS AND HEADS

AT GARRISON STREET

SHEET 3 OF 5

FED.RD. DIV.NO.	PROJECT ID.	HIGHWAY NO.
6	(SEE TITLE SHEET)	US 84

STATE	DIST.	COUNTY	SHEET NO.
TEXAS	WAC	MCLENNAN	336
CONT.	SECT.	JOB	
0055	15	072	

FILENAME: pw:\\kh-pw.bentley.com:kh-pw-01\Documents\01 Active Projects\TX-FTW-063586010 - US 84 (Waco Drive)\WAC 0055150721\4 - Design\Plan Set\8. Traffic\US84_SIGSIGN01_GAR.dgn
PLOTTED: 12/21/2020

PROJECT	US 84 (0055-15-072)
SHEET	337

			618 6046	618 6029	618 6054	620 6007	620 6008	620 6009	620 6010	684 6007	684 6012	684 6021	684 6049	6306 6007	OPTICOM CABLE	ITS RADIO CABLE
			CONDT (PVC) (SCH 80) (2")	CONDT (PVC) (SCH 40) (3")	CONDT (PVC) (SCH 80) (3") (BORE)	ELEC CONDR (NO.8) BARE	ELEC CONDR (NO.8) INSULATED	ELEC CONDR (NO.6) BARE	ELEC CONDR (NO.6) INSULATED	TRF SIG CBL (TY A)(12 AWG)(2 CONDR)	TRF SIG CBL (TY A)(12 AWG)(7 CONDR)	TRF SIG CBL (TY A)(12 AWG)(16 CONDR)	TRF SIG CBL (TY A)(16 AWG)(3 CONDR)	VIVDS CABLING	FOR CONTRACTOR INFO ONLY	FOR CONTRACTOR INFO ONLY
TRF ID	TABLE	Location	LF	LF	LF	LF	LF	LF	LF	LF	LF	LF	LF	LF	LF	LF
CONDUIT R01*	CONDUIT	TRENCH	55													
CONDUIT R02	CONDUIT	TRENCH		15			30	15	30							
CONDUIT R03-1	CONDUIT	TRENCH		55		55	110			330		220	275	220	220	55
CONDUIT R03-2	CONDUIT	TRENCH		55		55										
CONDUIT R04	CONDUIT	TRENCH		20		20						20		20	20	20
CONDUIT R05	CONDUIT	TRENCH		10		10				10			10			
CONDUIT R06	CONDUIT	TRENCH		20		20				20			20			
CONDUIT R07-1	CONDUIT	BORE			65	65										
CONDUIT R07-2	CONDUIT	BORE			65	65				65		65	65	65	65	
CONDUIT R08	CONDUIT	TRENCH		10		10				10			10			
CONDUIT R09	CONDUIT	TRENCH		15		15				15			15			
CONDUIT R10-1	CONDUIT	BORE			70	70	140									
CONDUIT R10-2	CONDUIT	BORE			70	70				70		70	70	70	70	
CONDUIT R11	CONDUIT	TRENCH		15		15				15			15			
CONDUIT R12-1	CONDUIT	BORE			100	100	200			300		200	200	200	200	
CONDUIT R12-2	CONDUIT	BORE			100	100										
PED POLE A	CONDUIT	IN PED POLE								5			10			
PED POLE B	CONDUIT	IN PED POLE								5			10			
PED POLE C	CONDUIT	IN PED POLE								5			10			
PED POLE D	CONDUIT	IN PED POLE								5			10			
PED POLE E	CONDUIT	IN PED POLE								5			10			
SIGNAL POLE A	CONDUIT	IN SIGNAL POLE									255			65	50	30
SIGNAL POLE B	CONDUIT	IN SIGNAL POLE									55			40	65	
SIGNAL POLE C	CONDUIT	IN SIGNAL POLE								5	210		10	40	55	
SIGNAL POLE D	CONDUIT	IN SIGNAL POLE								5	80		10	45	35	
Grand Total			55	215	470	570	480	15	30	870	600	575	750	765	780	105

*CONDUIT RUN 1 SHALL INCLUDE A SWEEPING 90° PVC AND SHALL STUB UP AT BOTTOM OF ONCOR POLE.

FILENAME: pw:\\kh-pw.bentley.com:kh-pw-01\Documents\01 Active Projects\TX-FTW-063586010 - US 84 (Waco Drive)\WAC 0055150721\4 - Design\Plan Set\8. Traffic\US84_CONSUM01_GAR.dgn
PLOTTED: 12/21/2020

Scott R Arnold, P.E.

12/21/2020

Kimley»Horn F-928

© 2021

Texas Department of Transportation

CONDUIT AND CONDUCTOR SUMMARY

AT GARRISON STREET

SHEET 4 OF 5

FED.RD. DIV.NO.	PROJECT ID.	HIGHWAY NO.
6	(SEE TITLE SHEET)	US 84

STATE	DIST.	COUNTY	SHEET NO.
TEXAS	WAC	MCLENNAN	337
CONT.	SECT.	JOB	
0055	15	072	

PROJECT	US 84 (0055-15-072)												
SHEET	338												
		624 6010	628 6144	680 6002	680 6004	682 6018	688 6001	688 6003	6062 6038	6306 6001	6306 6002	CABINET	OPTICOM	TY A SIGN
		GROUND BOX TY D (162922)W/APRON	ELC SRV TY D 120/240 060(NS)SS(E)PS(U)	INSTALL HWY TRF SIG (ISOLATED)	REMOVING TRAFFIC SIGNALS	PED SIG SEC (LED)(COUNTDOWN)	PED DETECT PUSH BUTTON (APS)	PED DETECTOR CONTROLLER UNIT	ITS RADIO (DUAL)(5 GHZ/5 GHZ)-C-U	VIVDS PROSR SYS	VIVDS CAM ASSY FXD LNS	TxDOT CABINET AND CONTROLLER	FOR CONTRACTOR INFO ONLY	FOR CONTRACTOR INFO ONLY
TRF ID	TABLE	EA	EA	EA	EA	EA	EA	EA	EA	EA	EA	EA	EA	SF
CABINET	MISCELLANEOUS											1		
GROUND BOX	MISCELLANEOUS	7												
ITS RADIO	MISCELLANEOUS								1					
OPTICOM	MISCELLANEOUS												4	
P1	MISCELLANEOUS					1								
P2	MISCELLANEOUS					1								
P3	MISCELLANEOUS					1								
P4	MISCELLANEOUS					1								
P5	MISCELLANEOUS					1								
P6	MISCELLANEOUS					1								
PED	MISCELLANEOUS						6	1						
SERVICE	MISCELLANEOUS		1											
SIGN	MISCELLANEOUS													
SIGNAL	MISCELLANEOUS			1	1									
VIVDS	MISCELLANEOUS									1	4			76
Grand Total		7	1	1	1	6	6	1	1	1	4	1	4	76

PROJECT	US 84 (0055-15-072)								
SHEET	338								
		682 6001	682 6002	682 6003	682 6004	682 6005	682 6006	682 6054	682 6055
		VEH SIG SEC (12")LED(GRN)	VEH SIG SEC (12")LED(GRN ARW)	VEH SIG SEC (12")LED(YEL)	VEH SIG SEC (12")LED(YEL ARW)	VEH SIG SEC (12")LED(RED)	VEH SIG SEC (12")LED(RED ARW)	BACKPLATE W/REF BRDR(3 SEC)(VENT)ALUM	BACKPLATE W/REF BRDR(4 SEC)(VENT)ALUM
TRF ID	TABLE	EA	EA	EA	EA	EA	EA	EA	EA
SIGNAL HEAD 01	SIGNAL HEAD		1		2		1		1
SIGNAL HEAD 02	SIGNAL HEAD	1		1		1		1	
SIGNAL HEAD 03	SIGNAL HEAD	1		1		1		1	
SIGNAL HEAD 04	SIGNAL HEAD	1		1		1		1	
SIGNAL HEAD 05	SIGNAL HEAD	1		1		1		1	
SIGNAL HEAD 06	SIGNAL HEAD	1		1		1		1	
SIGNAL HEAD 07	SIGNAL HEAD	1		1		1		1	
SIGNAL HEAD 08	SIGNAL HEAD		1		2		1		1
SIGNAL HEAD 09	SIGNAL HEAD	1		1		1		1	
SIGNAL HEAD 10	SIGNAL HEAD	1		1		1		1	
SIGNAL HEAD 11	SIGNAL HEAD	1		1		1		1	
SIGNAL HEAD 12	SIGNAL HEAD	1		1		1		1	
SIGNAL HEAD 13	SIGNAL HEAD	1		1		1		1	
Grand Total		11	2	11	4	11	2	11	2

PROJECT	US 84 (0055-15-072)					
SHEET	338					
		686 6025	686 6029	686 6055	686 6057	687 6001
		INS TRF SIG PL AM (S)1 ARM(24')	INS TRF SIG PL AM (S)1 ARM(28')	INS TRF SIG PL AM(S)1 ARM(50')LUM	INS TRF SIG PL AM(S)1 ARM(55')	PED POLE ASSEMBLY
TRF ID	TABLE	EA	EA	EA	EA	EA
PED POLE A	POLE					1
PED POLE B	POLE					1
PED POLE C	POLE					1
PED POLE D	POLE					1
PED POLE E	POLE					1
TRAFFIC SIGNAL POLE A	POLE				1	
TRAFFIC SIGNAL POLE B	POLE	1				
TRAFFIC SIGNAL POLE C	POLE			1		
TRAFFIC SIGNAL POLE D	POLE		1			
Grand Total		1	1	1	1	5

PROJECT	US 84 (0055-15-072)			
SHEET	338			
		PED POLE FND	416 6031	416 6034
		FOR CONTRACTOR INFO ONLY	DRILL SHAFT (TRF SIG POLE) (30 IN)	DRILL SHAFT (TRF SIG POLE) (48 IN)
TRF ID	TABLE	LF	LF	LF
PED POLE FND A	FOUNDATIONS	5.7		
PED POLE FND B	FOUNDATIONS	5.7		
PED POLE FND C	FOUNDATIONS	5.7		
PED POLE FND D	FOUNDATIONS	5.7		
PED POLE FND E	FOUNDATIONS	5.7		
SIGNAL POLE FND A	FOUNDATIONS			21.9
SIGNAL POLE FND B	FOUNDATIONS		11.3	
SIGNAL POLE FND C	FOUNDATIONS			21.9
SIGNAL POLE FND D	FOUNDATIONS		11.3	
Grand Total		28.5	22.6	43.8

Scott K. Arnold, P.E.

12/21/2020

Kimley»Horn F-928

© 2021

Texas Department of Transportation

TRAFFIC SIGNAL SUMMARY

AT GARRISON STREET

SHEET 5 OF 5

FED.RD. DIV.NO.	PROJECT ID.	HIGHWAY NO.
6	(SEE TITLE SHEET)	US 84

STATE	DIST.	COUNTY	SHEET NO.
TEXAS	WAC	MCLENNAN	338
CONT.	SECT.	JOB	
0055	15	072	

FILENAME: pw:\\kh-pw.bentley.com:kh-pw-01\Documents\01 Active Projects\TX-FTW-063586010 - US 84 (Waco Drive)\WAC 005515072\4 - Design\Plan Set\8. Traffic\US84_SIGSUM01_GAR.dgn
PLOTTED: 12/21/2020

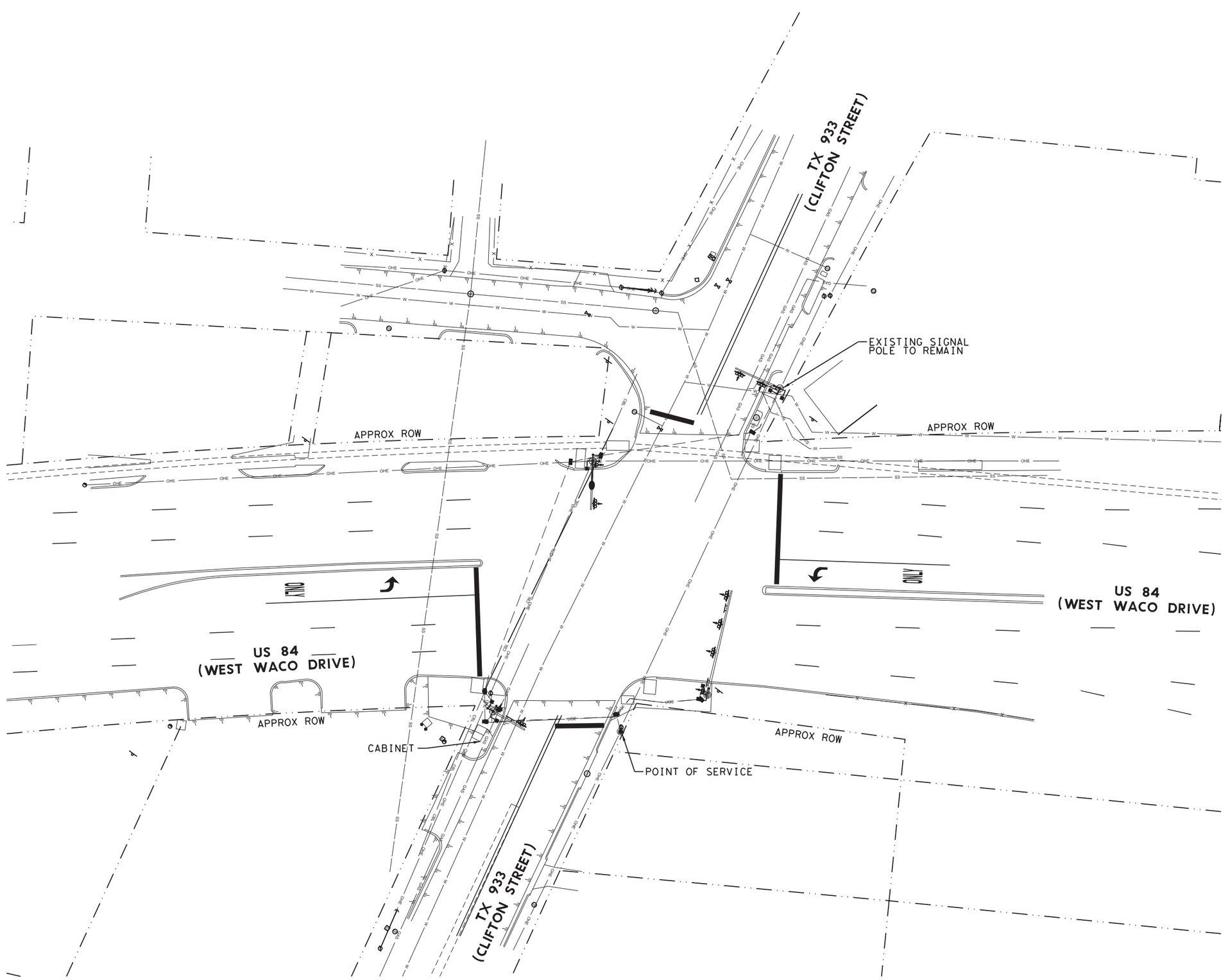

N

0' 20' 40'
0' 20' 40'

LEGEND

- POINT OF SERVICE
- ELECTRICAL SERVICE
- CONDUIT, PVC
- GROUND BOX

NOTES

1. THE LOCATIONS SHOWN AS EXISTING CONDUIT RUNS ARE APPROXIMATE. THE EXACT LOCATION WILL BE DETERMINED IN THE FIELD. NO EXISTING CONDUIT WILL BE USED, SEE PROPOSED TRAFFIC SIGNAL SHEETS.

STATE OF TEXAS
SCOTT R. ARNOLD
96782
LICENSED
PROFESSIONAL ENGINEER

Scott R. Arnold, P.E.
12/21/2020

Kimley»Horn F-928

© 2021
Texas Department of Transportation

CONDITION DIAGRAM

AT CLIFTON STREET

SHEET 1 OF 5

FED.RD. DIV.NO.	PROJECT ID.	HIGHWAY NO.
6	(SEE TITLE SHEET)	US 84

STATE	DIST.	COUNTY	SHEET NO.
TEXAS	WAC	MCLENNAN	339
CONT.	SECT.	JOB	
0055	15	072	

FILENAME: pw:\\kh-pw.bentley.com:kh-pw-01\Documents\01 Active Projects\TX-FTW-063586010 - US 84 (Waco Drive)\WAC 0055150721\4 - Design\Plan Set\8. Traffic\US84_EXCON_CLIF.dgn
PLOTTED: 12/21/2020

ELECTRICAL SERVICE DATA											
Electrical Service ID	Plan Sheet Number	Electrical Service Description	Service Conduit Size	Service Conductors No./Size	Safety Switch Amps	Main Ckt. Bkr. Pole/Amps	Two-Pole Contactor Amps	Panelbed/ Loadcenter Amp Rating	Branch Circuit ID	Branch Ckt. Bkr. Pole/Amps	Branch Circuit Amps	KVA Load
ES-23	340	ELEC SRV TY D 120/240 060 (NS)SS(E)PS(U)	2"	3/#6	N/A	2P/60	30	100	Sig. Controller	1P/30	28.6	3.7
									Luminaires	2P/15	2.3	

CONTRACTOR'S INFO ONLY

BORE PIT REMOVAL/REPLACEMENT QUANTITIES
WITHIN TEMPORARY RIGHT OF ENTRY:
*25 SF OF CONCRETE PARKING LOT ON NW CORNER
*25 SF OF CONCRETE PARKING LOT ON SW CORNER

DETAIL B
NW CORNER
US 84 AT CLIFTON STREET
NTS

DETAIL A
SW CORNER
US 84 AT CLIFTON STREET
NTS

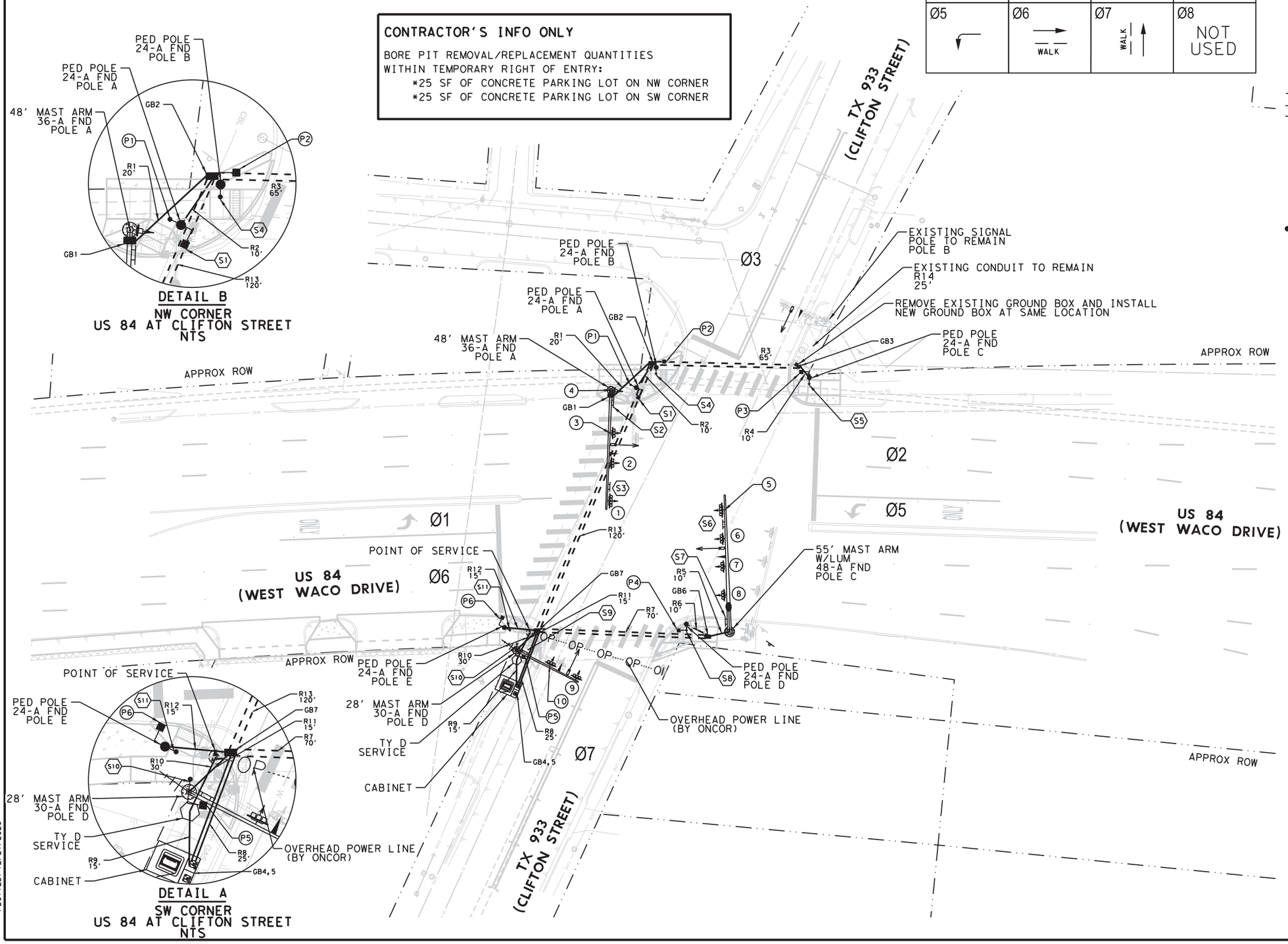

PROPOSED RING AND STRUCTURE

Ø1	Ø2 WALK	Ø3 WALK	Ø4 NOT USED
Ø5	Ø6 WALK	Ø7 WALK	Ø8 NOT USED

0' 20' 40'

LEGEND

- PROPOSED POINT OF SERVICE
- PROPOSED ELECTRICAL SERVICE
- PROPOSED CONDUIT, PVC
- PROPOSED CONDUIT, BORE
- PROPOSED VIVDS
- PROPOSED GROUND BOX (TY D)
- PROPOSED LED COUNTDOWN & APS
- PROPOSED LUMINAIRE
- PROPOSED SIGNAL POLE ASSEMBLY
- PROPOSED OPTICOM DETECTOR (INSTALL ONLY)
- PROPOSED ITS RADIO ANTENNA
- PROPOSED SIGNAL CABINET

NOTES:

1. SHORT RUNS FROM THE GROUND BOXES TO THE SIGNAL / PEDESTRIAN FOUNDATIONS WILL NOT BE PAID DIRECTLY, BUT SUBSIDIARY TO VARIOUS BID ITEMS. FOR THE SIGNAL POLES, THIS WILL BE 2 (3") CONDUITS.
2. INSTALL TRAFFIC SIGNAL CONTROLLER FOUNDATION PER TS-CF DETAIL.
3. ALL ROAD BORES TO BE (2) 3" SCH 80.

STATE OF TEXAS — 96782 — LICENSED — PROFESSIONAL ENGINEER
Scott R. Arnold, P.E.
03/01/2021

Kimley»Horn F-928

© 2021
Texas Department of Transportation

PROPOSED TRAFFIC SIGNAL

AT CLIFTON STREET

SHEET 2 OF 5

FED. RD. DIV. NO.	PROJECT ID.	HIGHWAY NO.
6	(SEE TITLE SHEET)	US 84

STATE	DIST.	COUNTY	SHEET NO.
TEXAS	WAC	MCLENNAN	340
CONT.	SECT.	JOB	
0055	15	072	

FILENAME: pw:\\kh-pw.bentley.com:kh-pw-01\Documents\01 Active Projects\TX-FTW-063586010 - US 84 (Waco Drive)\WAC 005515072\4 - Design\Plan Set\8. Traffic\US84_SIG01_CLIF.dgn
PLOTTED: 12/21/2020

SIGNAL WIRING DETAIL

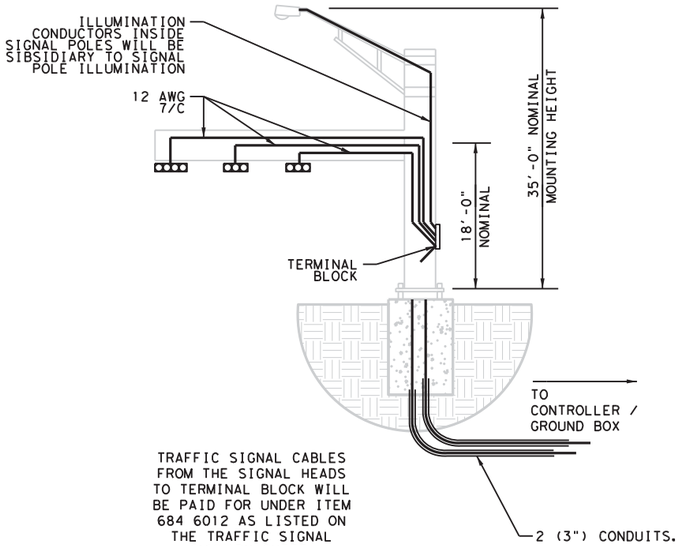

TRAFFIC SIGNAL CABLES FROM THE SIGNAL HEADS TO TERMINAL BLOCK WILL BE PAID FOR UNDER ITEM 684 6012 AS LISTED ON THE TRAFFIC SIGNAL SUMMARY SHEET.

EACH SIGNAL HEAD WILL BE WIRED TO TERMINAL BLOCK.

SIGNAL HEADS

PED SIGNAL HEADS P1, P2, P3, P4, P5, P6

SIGNAL HEADS #1, 5

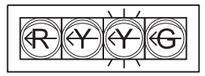

SIGNAL HEADS #2, 3, 6, 7, 8, 9, 10

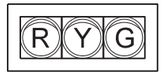

SIGNAL HEAD #4

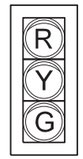

NOTES:

1. TY A SIGNS MOUNTED ON SIGNAL EQUIPMENT IS SHOWN FOR CONTRACTOR INFORMATION ONLY AND SUBSIDIARY TO ITEM 680 6002.

SIGNS

(S4) (S5) (S11)

R10-3E(R)

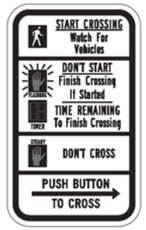

9" X 15"
TY A
ALUM

(0.94 SQ FT)
EACH

(S1) (S8) (S10)

R10-3E(L)

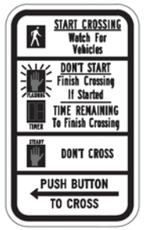

9" X 15"
TY A
ALUM

(0.94 SQ FT)
EACH

(S3) (S6)

R10-17T

36" X 42"
TY A
ALUM

(10.5 SQ FT)
EACH

(S2) (S7)

D3-1G

84" X 18"
TY A
ALUM

(10.5 SQ FT)
EACH

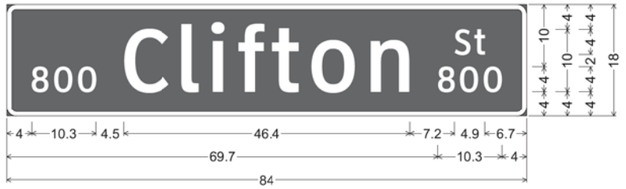

D3-1G;
1.5" Radius, 0.8" Border, White on, Green;
"800", ClearviewHwy-3-W; "Clifton", ClearviewHwy-3-W; "St", ClearviewHwy-3-W;
"800", ClearviewHwy-3-W;

(S9)

D3-1G

84" X 18"
TY A
ALUM

(10.5 SQ FT)
EACH

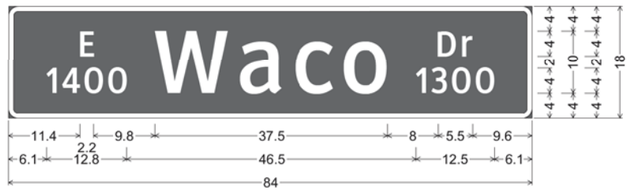

D3-1G;
1.5" Radius, 0.8" Border, White on, Green;
"E", ClearviewHwy-3-W; "1400", ClearviewHwy-3-W; "Waco", ClearviewHwy-3-W;
"Dr", ClearviewHwy-3-W; "1300", ClearviewHwy-3-W;

STATE OF TEXAS
SCOTT R ARNOLD
96782
LICENSED PROFESSIONAL ENGINEER

Scott R Arnold, P.E.
12/21/2020

Kimley»Horn F-928

© 2021

Texas Department of Transportation

TRAFFIC SIGNAL SIGNS AND HEADS

AT CLIFTON STREET

SHEET 3 OF 5

FED.RD. DIV.NO.	PROJECT ID.	HIGHWAY NO.
6	(SEE TITLE SHEET)	US 84

STATE	DIST.	COUNTY	SHEET NO.
TEXAS	WAC	MCLENNAN	
CONT.	SECT.	JOB	341
0055	15	072	

FILENAME: pw:\\kh-pw.bentley.com:kh-pw-01\Documents\01 Active Projects\TX-FTW-063586010 - US 84 (Waco Drive)\WAC 0055150724 - Design\Plan Set\8. Traffic\US84_SIGSIGN01_CLIF.dgn
PLOTTED: 12/21/2020

PROJECT	US 84 (0055-15-072)
SHEET	342

			618 6046	618 6029	618 6054	620 6007	620 6008	620 6009	620 6010	684 6007	684 6012	684 6021	684 6049	6306 6007	OPTICOM CABLE	ITS RADIO CABLE
			CONDT (PVC) (SCH 80) (2")	CONDT (PVC) (SCH 40) (3")	CONDT (PVC) (SCH 80) (3") (BORE)	ELEC CONDR (NO.8) BARE	ELEC CONDR (NO.8) INSULATED	ELEC CONDR (NO.6) BARE	ELEC CONDR (NO.6) INSULATED	TRF SIG CBL (TY A)(12 AWG)(2 CONDR)	TRF SIG CBL (TY A)(12 AWG)(7 CONDR)	TRF SIG CBL (TY A)(12 AWG)(16 CONDR)	TRF SIG CBL (TY A)(16 AWG)(3 CONDR)	VIVDS CABLING	FOR CONTRACTOR INFO ONLY	FOR CONTRACTOR INFO ONLY
TRF ID	TABLE	Location	LF	LF	LF	LF	LF	LF	LF	LF	LF	LF	LF	LF	LF	LF
CONDUIT R01	CONDUIT	TRENCH		20		20						20		20	20	
CONDUIT R02	CONDUIT	TRENCH		10		10				10			10			
CONDUIT R03-1	CONDUIT	BORE			65	65	130			65		65	65	65	65	
CONDUIT R03-2	CONDUIT	BORE			65	65	130									
CONDUIT R04	CONDUIT	TRENCH		10		10				10			10			
CONDUIT R05	CONDUIT	TRENCH		10		10	20					10		10	10	10
CONDUIT R06	CONDUIT	TRENCH		10		10				10			10			
CONDUIT R07-1	CONDUIT	BORE			70	70	140			70		70	70	70	70	
CONDUIT R07-2	CONDUIT	BORE			70	70										
CONDUIT R08-1	CONDUIT	TRENCH		25		25	50			150		100	125	100	100	25
CONDUIT R08-2	CONDUIT	TRENCH		25		25										
CONDUIT R09	CONDUIT	TRENCH		15			30	15	30							
CONDUIT R10*	CONDUIT	TRENCH	30													
CONDUIT R11	CONDUIT	TRENCH		15		15				15		15		15	15	15
CONDUIT R12	CONDUIT	TRENCH		15		15				15			15			
CONDUIT R13-1	CONDUIT	BORE			120	120				360		240	360	240	240	
CONDUIT R13-2	CONDUIT	BORE			120	120										
CONDUIT R14 (EX)	CONDUIT	TRENCH										10		10	10	
PED POLE A	CONDUIT	IN PED POLE								5			10			
PED POLE B	CONDUIT	IN PED POLE								5			10			
PED POLE C	CONDUIT	IN PED POLE								5			10			
PED POLE D	CONDUIT	IN PED POLE								5			10			
PED POLE E	CONDUIT	IN PED POLE								5			10			
SIGNAL POLE A	CONDUIT	IN SIGNAL POLE								5	175		10	45	50	
EX SIGNAL POLE B	CONDUIT	IN SIGNAL POLE												35	30	
SIGNAL POLE C	CONDUIT	IN SIGNAL POLE									210			55	50	30
SIGNAL POLE D	CONDUIT	IN SIGNAL POLE									80			45	40	
Grand Total			30	155	510	650	500	15	30	735	465	530	725	710	700	80

*CONDUIT RUN 10 SHALL INCLUDE A SWEEPING 90° PVC AND SHALL STUB UP AT BOTTOM OF ONCOR POLE.

FILENAME: pw:\\kh-pw.bentley.com:kh-pw-01\Documents\01 Active Projects\TX-FTW-063586010 - US 84 (Waco Drive)\WAC 005515072\4 - Design\Plan Set\8. Traffic\US84_CONSUM01_CLIF.dgn
PLOTTED: 12/21/2020

Scott R. Arnold, P.E.
12/21/2020

Kimley»Horn F-928

© 2021

Texas Department of Transportation

CONDUIT AND CONDUCTOR SUMMARY

AT CLIFTON STREET

SHEET 4 OF 5

FED.RD. DIV.NO.	PROJECT ID.	HIGHWAY NO.
6	(SEE TITLE SHEET)	US 84

STATE	DIST.	COUNTY	SHEET NO.
TEXAS	WAC	MCLENNAN	342
CONT.	SECT.	JOB	
0055	15	072	

PROJECT	US 84 (0055-15-072)												
SHEET	343												
		624 6010	628 6144	680 6002	680 6004	682 6018	688 6001	688 6003	6062 6038	6306 6001	6306 6002	CABINET	OPTICOM	TY A SIGN
		GROUND BOX TY D (162922)W/APRON	ELC SRV TY D 120/240 060(NS)SS(E)PS(U)	INSTALL HWY TRF SIG (ISOLATED)	REMOVING TRAFFIC SIGNALS	PED SIG SEC (LED)(COUNTDOWN)	PED DETECT PUSH BUTTON (APS)	PED DETECTOR CONTROLLER UNIT	ITS RADIO (DUAL)(5 GHZ/5 GHZ)-C-U	VIVDS PROSR SYS	VIVDS CAM ASSY FXD LNS	TxDOT CABINET AND CONTROLLER	FOR CONTRACTOR INFO ONLY	FOR CONTRACTOR INFO ONLY
TRF ID	TABLE	EA	EA	EA	EA	EA	EA	EA	EA	EA	EA	EA	EA	SF
CABINET	MISCELLANEOUS											1		
GROUND BOX	MISCELLANEOUS	7												
ITS RADIO	MISCELLANEOUS								1					
OPTICOM	MISCELLANEOUS												4	
P1	MISCELLANEOUS					1								
P2	MISCELLANEOUS					1								
P3	MISCELLANEOUS					1								
P4	MISCELLANEOUS					1								
P5	MISCELLANEOUS					1								
P6	MISCELLANEOUS					1								
PED	MISCELLANEOUS						6	1						
SERVICE	MISCELLANEOUS		1											
SIGN	MISCELLANEOUS													48
SIGNAL	MISCELLANEOUS			1	1									
VIVDS	MISCELLANEOUS									1	4			
Grand Total		7	1	1	1	6	6	1	1	1	4	1	4	48

PROJECT	US 84 (0055-15-072)								
SHEET	343								
		682 6001	682 6002	682 6003	682 6004	682 6005	682 6006	682 6054	682 6055
		VEH SIG SEC (12")LED(GRN)	VEH SIG SEC (12")LED(GRN ARW)	VEH SIG SEC (12")LED(YEL)	VEH SIG SEC (12")LED(YEL ARW)	VEH SIG SEC (12")LED(RED)	VEH SIG SEC (12")LED(RED ARW)	BACKPLATE W/REF BRDR(3 SEC)(VENT)ALUM	BACKPLATE W/REF BRDR(4 SEC)(VENT)ALUM
TRF ID	TABLE	EA	EA	EA	EA	EA	EA	EA	EA
SIGNAL HEAD 01	SIGNAL HEAD		1		2		1		1
SIGNAL HEAD 02	SIGNAL HEAD	1		1		1		1	
SIGNAL HEAD 03	SIGNAL HEAD	1		1		1		1	
SIGNAL HEAD 04	SIGNAL HEAD	1		1		1		1	
SIGNAL HEAD 05	SIGNAL HEAD		1		2		1		1
SIGNAL HEAD 06	SIGNAL HEAD	1		1		1		1	
SIGNAL HEAD 07	SIGNAL HEAD	1		1		1		1	
SIGNAL HEAD 08	SIGNAL HEAD	1		1		1		1	
SIGNAL HEAD 09	SIGNAL HEAD	1		1		1		1	
SIGNAL HEAD 10	SIGNAL HEAD	1		1		1		1	
Grand Total		8	2	8	4	8	2	8	2

PROJECT	US 84 (0055-15-072)				
SHEET	343				
		686 6029	686 6049	686 6059	687 6001
		INS TRF SIG PL AM (S)1 ARM(28')	INS TRF SIG PL AM(S)1 ARM(48')	INS TRF SIG PL AM(S)1 ARM(55')LUM	PED POLE ASSEMBLY
TRF ID	TABLE	EA	EA	EA	EA
PED POLE A	POLE				1
PED POLE B	POLE				1
PED POLE C	POLE				1
PED POLE D	POLE				1
PED POLE E	POLE				1
TRAFFIC SIGNAL POLE A	POLE		1		
TRAFFIC SIGNAL POLE C	POLE			1	
TRAFFIC SIGNAL POLE D	POLE	1			
Grand Total		1	1	1	5

PROJECT	US 84 (0055-15-072)				
SHEET	343				
		PED POLE FND	416 6031	416 6032	416 6034
		FOR CONTRACTOR INFO ONLY	DRILL SHAFT (TRF SIG POLE) (30 IN)	DRILL SHAFT (TRF SIG POLE) (36 IN)	DRILL SHAFT (TRF SIG POLE) (48 IN)
TRF ID	TABLE	LF	LF	LF	LF
PED POLE FND A	FOUNDATIONS	5.7			
PED POLE FND B	FOUNDATIONS	5.7			
PED POLE FND C	FOUNDATIONS	5.7			
PED POLE FND D	FOUNDATIONS	5.7			
PED POLE FND E	FOUNDATIONS	5.7			
SIGNAL POLE FND A	FOUNDATIONS			13.2	
SIGNAL POLE FND C	FOUNDATIONS				21.9
SIGNAL POLE FND D	FOUNDATIONS		11.3		
Grand Total		28.5	11.3	13.2	21.9

FILENAME: pw:\\kh-pw.bentley.com:kh-pw-01\Documents\01 Active Projects\TX-FTW-063586010 - US 84 (Waco Drive)\WAC 0055150 72\4 - Design\Plan Set\8. Traffic\US84_SIGSUM01_CLIF.dgn
PLOTTED: 12/21/2020

Scott R. Arnold, P.E.

12/21/2020

Kimley»Horn F-928

© 2021

Texas Department of Transportation

TRAFFIC SIGNAL SUMMARY

AT CLIFTON STREET

SHEET 5 OF 5

FED.RD. DIV.NO.	PROJECT ID.	HIGHWAY NO.
6	(SEE TITLE SHEET)	US 84

STATE	DIST.	COUNTY	SHEET NO.
TEXAS	WAC	MCLENNAN	343
CONT.	SECT.	JOB	
0055	15	072	

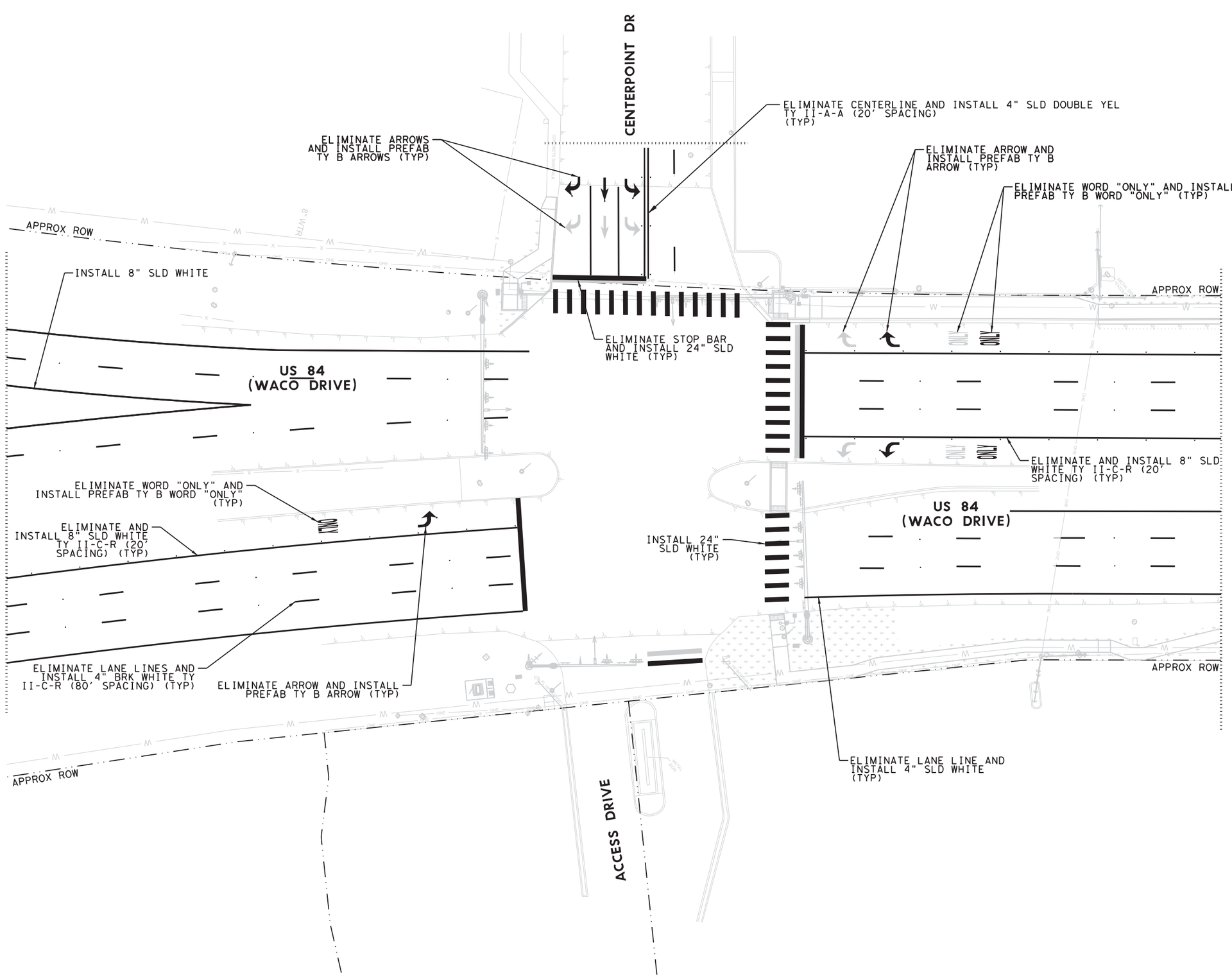

LEGEND

LIMIT OF PAVEMENT MARKINGS

NOTES

1. INSTALLATION OF THE PROPOSED STOP BARS, PAVEMENT MARKING ARROWS, LANE LINE EXTENSIONS, AND LANE USE SIGNS (BOTH GROUND AND SIGNAL MOUNTED) MUST BE COORDINATED WITH THE SIGNAL TURN ON.
2. SEE PROPOSED TRAFFIC SIGNAL SHEETS FOR TY A SIGNS MOUNTED ON THE SIGNAL EQUIPMENT.
3. CONFIRM WITH THE ENGINEER PRIOR TO PLACEMENT OF THE LANE LINE EXTENSIONS.

STATE OF TEXAS
96782
LICENSED
PROFESSIONAL ENGINEER

Scott R. Arnold, P.E.

12/21/2020

Kimley»Horn F-928

© 2021

Texas Department of Transportation

PROPOSED PVMT MARKINGS

AT CENTERPOINT DRIVE

SHEET 1 OF 2

FED.RD. DIV.NO.	PROJECT ID.	HIGHWAY NO.
6	(SEE TITLE SHEET)	US 84

STATE	DIST.	COUNTY	SHEET NO.
TEXAS	WAC	MCLENNAN	344
CONT.	SECT.	JOB	
0055	15	072	

FILENAME: pw:\\kh-pw.bentley.com:kh-pw-01\Documents\01 Active Projects\TX-FTW-063586010 - US 84 (Waco Drive)\WAC 005515072\4 - Design\Plan Set\8. Traffic\US84_SPM01_CP.dgn
PLOTTED: 12/21/2020

PROJECT	US 84 (0055-15-072)											
SHEET	345											
		666 6036	666 6048	666 6224	666 6226	666 6230	666 6300	666 6303	666 6315	668 6019	668 6027	672 6010	677 6001
		REFL PAV MRK TY I (W)8"(SLD)(100MIL)	REFL PAV MRK TY I (W)24"(SLD)(100MIL)	PAVEMENT SEALER 4"	PAVEMENT SEALER 8"	PAVEMENT SEALER 24"	RE PM W/RET REQ TY I (W)4"(BRK)(100MIL)	RE PM W/RET REQ TY I (W)4"(SLD)(100MIL)	RE PM W/RET REQ TY I (Y)4"(SLD)(100MIL)	PREFAB PAV MRK TY B (W)(ARROW)	PREFAB PAV MRK TY B (W)(WORD)	REFL PAV MRKR TY II-C-R	ELIM EXT PAV MRK & MRKS (4")
TRF ID	TABLE	LF	LF	LF	LF	LF	LF	LF	LF	EA	EA	EA	LF
PVMT MARKING	PVMT MARKING	850	475	1340	850	475	420	810	110	6	3	50	1340
SIGN	SIGN												
Grand Total		850	475	1340	850	475	420	810	110	6	3	50	1340

PROJECT	US 84 (0055-15-072)				
SHEET	345				
		677 6003	677 6007	677 6008	677 6012
		ELIM EXT PAV MRK & MRKS (8")	ELIM EXT PAV MRK & MRKS (24")	ELIM EXT PAV MRK & MRKS (ARROW)	ELIM EXT PAV MRK & MRKS (WORD)
TRF ID	TABLE	LF	LF	EA	EA
PVMT MARKING	PVMT MARKING	640	165	6	3
SIGN	SIGN				
Grand Total		640	165	6	3

FILENAME: pw:\\kh-pw.bentley.com:kh-pw-01\Documents\01 Active Projects\TX-FTW-063586010 - US 84 (Waco Drive)\WAC 005515072\4 - Design\Plan Set\8. Traffic\US84_SPMSUM01_CP.dgn
PLOTTED: 12/21/2020

Scott R. Arnold, P.E.

12/21/2020

Kimley»Horn F-928

© 2021

Texas Department of Transportation

PVMT MARKINGS SUMMARY

AT CENTERPOINT DRIVE

SHEET 2 OF 2

FED.RD. DIV.NO.	PROJECT ID.	HIGHWAY NO.
6	(SEE TITLE SHEET)	US 84

STATE	DIST.	COUNTY	SHEET NO.
TEXAS	WAC	MCLENNAN	345
CONT.	SECT.	JOB	
0055	15	072	

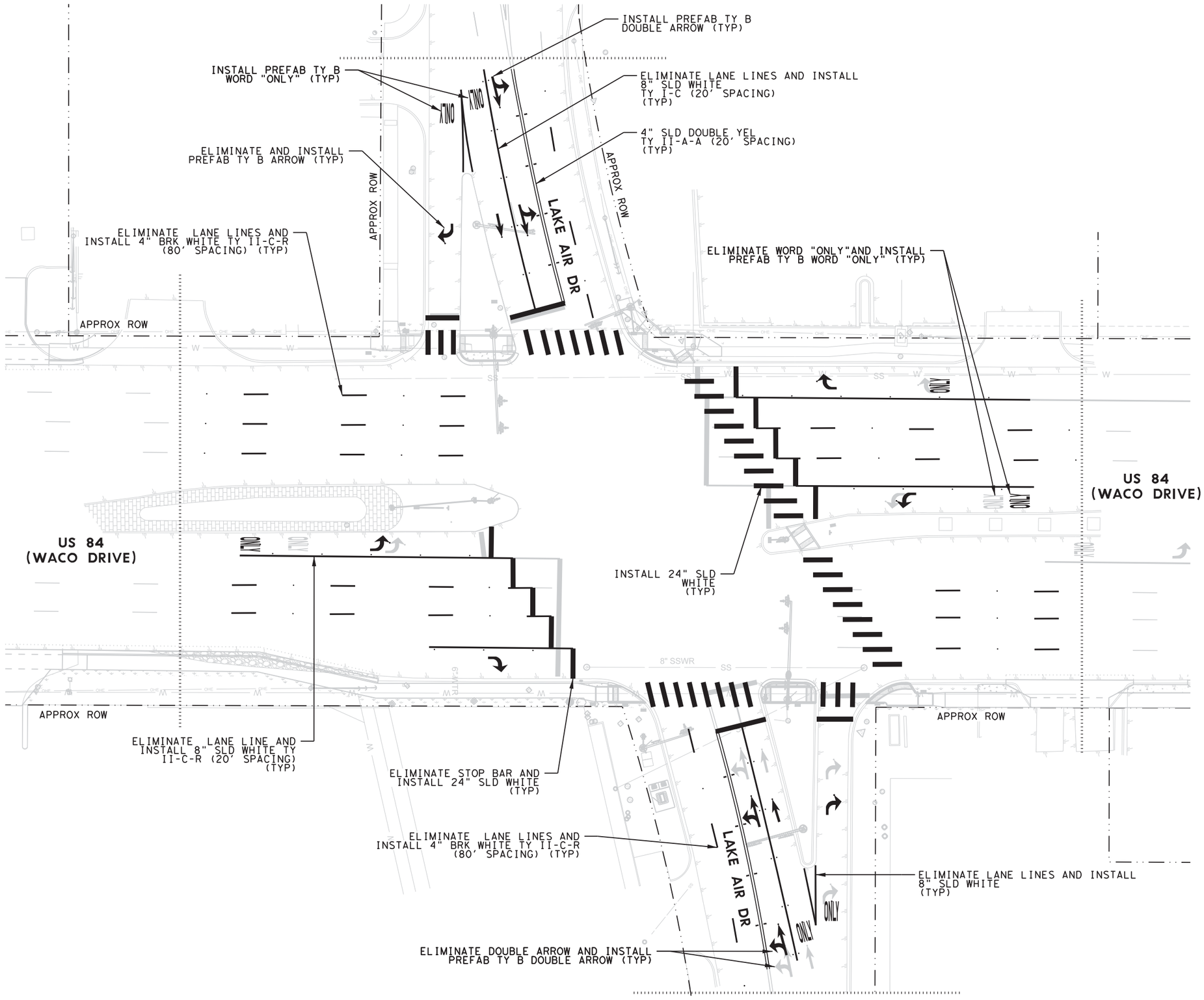

LEGEND

LIMIT OF PAVEMENT MARKINGS

NOTES:

1. INSTALLATION OF THE PROPOSED STOP BARS, PAVEMENT MARKING ARROWS, LANE LINE EXTENSIONS, AND LANE USE SIGNS (BOTH GROUND AND SIGNAL MOUNTED) MUST BE COORDINATED WITH THE SIGNAL TURN ON.
2. SEE PROPOSED TRAFFIC SIGNAL SHEETS FOR TY A SIGNS MOUNTED ON THE SIGNAL EQUIPMENT.
3. CONFIRM WITH THE ENGINEER PRIOR TO PLACEMENT OF THE LANE LINE EXTENSIONS.

STATE OF TEXAS
SCOTT R. ARNOLD
96782
LICENSED
PROFESSIONAL ENGINEER

Scott R. Arnold, P.E.

12/21/2020

Kimley»Horn F-928

© 2021

Texas Department of Transportation

PROPOSED PVMT MARKINGS

AT LAKE AIR DRIVE

SHEET 1 OF 2

FED.RD. DIV.NO.	PROJECT ID.	HIGHWAY NO.
6	(SEE TITLE SHEET)	US 84

STATE	DIST.	COUNTY	SHEET NO.
TEXAS	WAC	MCLENNAN	346
CONT.	SECT.	JOB	
0055	15	072	

FILENAME: pw:\\kh-pw.bentley.com:kh-pw-01\Documents\01 Active Projects\TX-FTW-063586010 - US 84 (Waco Drive)\WAC 0055150721\4 - Design\Plan Set\8. Traffic\US84_SPM01_LA.dgn
PLOTTED: 12/21/2020

PROJECT	US 84 (0055-15-072)											
SHEET	347											
		666 6036	666 6048	666 6224	666 6226	666 6230	666 6300	666 6315	668 6019	668 6020	668 6027	672 6007	672 6009
		REFL PAV MRK TY I (W)8"(SLD)(100MIL)	REFL PAV MRK TY I (W)24"(SLD)(100MIL)	PAVEMENT SEALER 4"	PAVEMENT SEALER 8"	PAVEMENT SEALER 24"	RE PM W/RET REQ TY I (W)4"(BRK)(100MIL)	RE PM W/RET REQ TY I (Y)4"(SLD)(100MIL)	PREFAB PAV MRK TY B (W)(ARROW)	PREFAB PAV MRK TY B (W)(DBL ARROW)	PREFAB PAV MRK TY B (W)(WORD)	REFL PAV MRKR TY I-C	REFL PAV MRKR TY II-A-A
TRF ID	TABLE	LF	LF	LF	LF	LF	LF	LF	EA	EA	EA	EA	EA
PVMT MARKING	PVMT MARKING	710	630	730	710	630	330	400	8	4	7	20	16
SIGN	SIGN												
Grand Total		710	630	730	710	630	330	400	8	4	7	20	16

PROJECT	US 84 (0055-15-072)							
SHEET	347							
		672 6010	677 6001	677 6003	677 6007	677 6008	677 6009	677 6012
		REFL PAV MRKR TY II-C-R	ELIM EXT PAV MRK & MRKS (4")	ELIM EXT PAV MRK & MRKS (8")	ELIM EXT PAV MRK & MRKS (24")	ELIM EXT PAV MRK & MRKS (ARROW)	ELIM EXT PAV MRK & MRKS (DBL ARROW)	ELIM EXT PAV MRK & MRKS (WORD)
TRF ID	TABLE	EA	LF	LF	LF	EA	EA	EA
PVMT MARKING	PVMT MARKING	39	390	670	190	8	2	2
SIGN	SIGN							
Grand Total		39	390	670	190	8	2	2

Scott R. Arnold, P.E.

12/21/2020

Kimley»Horn F-928

© 2021

Texas Department of Transportation

PVMT MARKINGS SUMMARY

AT LAKE AIR DRIVE

SHEET 2 OF 2

FED.RD. DIV.NO.	PROJECT ID.	HIGHWAY NO.
6	(SEE TITLE SHEET)	US 84

STATE	DIST.	COUNTY	SHEET NO.
TEXAS	WAC	MCLENNAN	347
CONT.	SECT.	JOB	
0055	15	072	

FILENAME: pw:\\kh-pw.bentley.com:kh-pw-01\Documents\01 Active Projects\TX-FTW-063586010 - US 84 (Waco Drive)\WAC 005515072\4 - Design\Plan Set\8. Traffic\US84_SPMSUM01_LA.dgn
PLOTTED: 12/21/2020

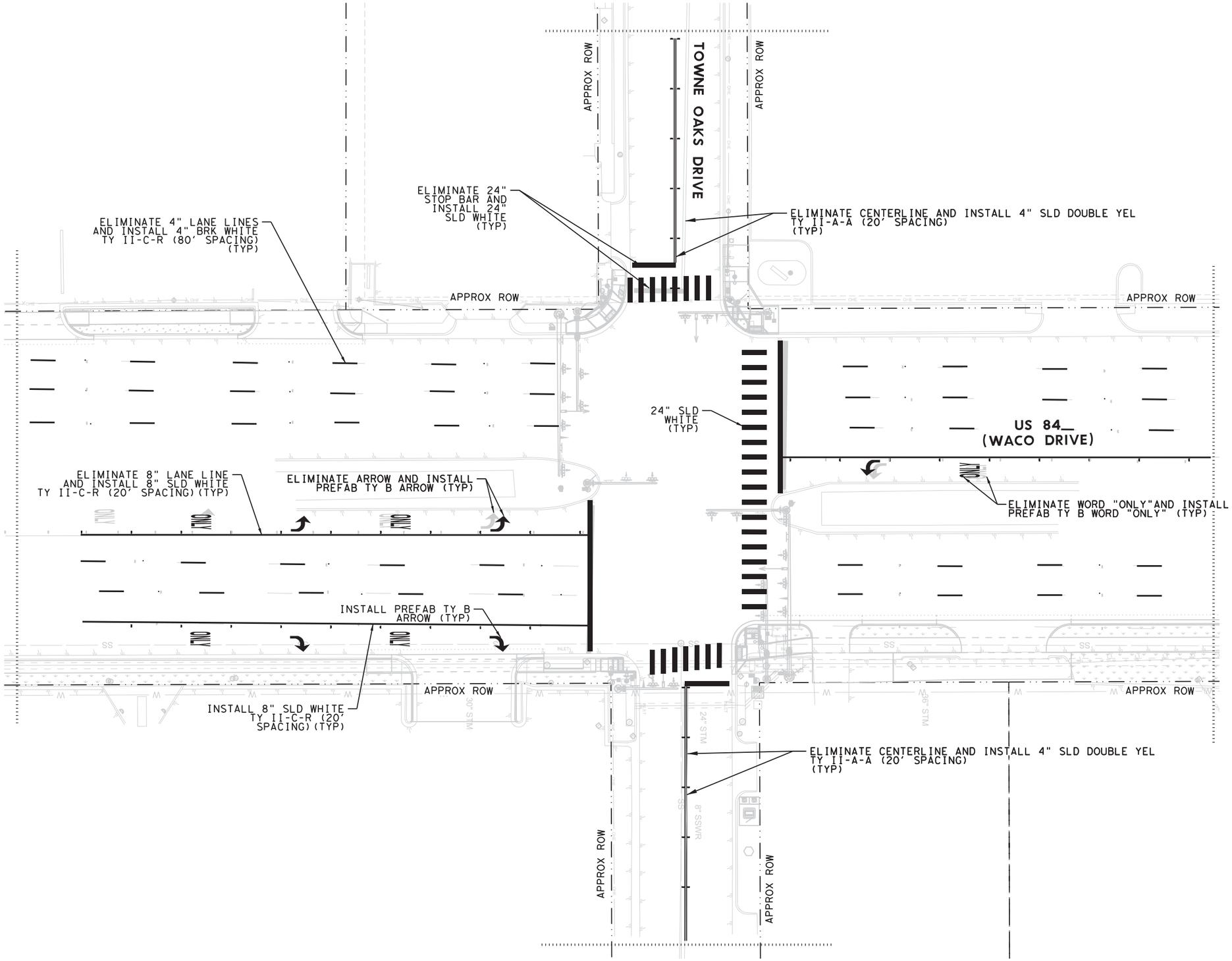

0' 20' 40'

LEGEND

LIMIT OF PAVEMENT MARKINGS

NOTES:

1. INSTALLATION OF THE PROPOSED STOP BARS, PAVEMENT MARKING ARROWS, LANE LINE EXTENSIONS, AND LANE USE SIGNS (BOTH GROUND AND SIGNAL MOUNTED) MUST BE COORDINATED WITH THE SIGNAL TURN ON.
2. SEE PROPOSED TRAFFIC SIGNAL SHEETS FOR TY A SIGNS MOUNTED ON THE SIGNAL EQUIPMENT.
3. CONFIRM WITH THE ENGINEER PRIOR TO PLACEMENT OF THE LANE LINE EXTENSIONS.

STATE OF TEXAS — SCOTT R. ARNOLD — 96782 — LICENSED PROFESSIONAL ENGINEER

Scott R. Arnold, P.E.

12/21/2020

Kimley»Horn F-928

© 2021

Texas Department of Transportation

PROPOSED PVMT MARKINGS

AT TOWNE OAKS DRIVE

SHEET 1 OF 2

FED. RD. DIV. NO.	PROJECT ID.	HIGHWAY NO.
6	(SEE TITLE SHEET)	US 84

STATE	DIST.	COUNTY	SHEET NO.
TEXAS	WAC	MCLENNAN	348
CONT.	SECT.	JOB	
0055	15	072	

FILENAME: pw:\\kh-pw.bentley.com:kh-pw-01\Documents\01 Active Projects\TX-FTW-063586010 - US 84 (Waco Drive)\WAC 0055150721\4 - Design\Plan Set\8. Traffic\US84_SPM01_T0.dgn
PLOTTED: 12/21/2020

PROJECT	US 84 (0055-15-072)											
SHEET	349											
		666 6036	666 6048	666 6224	666 6226	666 6230	666 6300	666 6315	668 6019	668 6027	672 6009	672 6010	677 6001
		REFL PAV MRK TY I (W)8"(SLD)(100MIL)	REFL PAV MRK TY I (W)24"(SLD)(100MIL)	PAVEMENT SEALER 4"	PAVEMENT SEALER 8"	PAVEMENT SEALER 24"	RE PM W/RET REQ TY I (W)4"(BRK)(100MIL)	RE PM W/RET REQ TY I (Y)4"(SLD)(100MIL)	PREFAB PAV MRK TY B (W)(ARROW)	PREFAB PAV MRK TY B (W)(WORD)	REFL PAV MRKR TY II-A-A	REFL PAV MRKR TY II-C-R	ELIM EXT PAV MRK & MRKS (4")
TRF ID	TABLE	LF	LF	LF	LF	LF	LF	LF	EA	EA	EA	EA	LF
PVMT MARKING	PVMT MARKING	580	490	880	580	490	480	400	5	5	22	54	940
SIGN	SIGN												
Grand Total		580	490	880	580	490	480	400	5	5	22	54	940

PROJECT	US 84 (0055-15-072)				
SHEET	349				
		677 6003	677 6007	677 6008	677 6012
		ELIM EXT PAV MRK & MRKS (8")	ELIM EXT PAV MRK & MRKS (24")	ELIM EXT PAV MRK & MRKS (ARROW)	ELIM EXT PAV MRK & MRKS (WORD)
TRF ID	TABLE	LF	LF	EA	EA
PVMT MARKING	PVMT MARKING	335	140	3	3
SIGN	SIGN				
Grand Total		335	140	3	3

FILENAME: pw:\\kh-pw.bentley.com:kh-pw-01\Documents\01 Active Projects\TX-FTW-063586010 - US 84 (Waco Drive)\WAC 0055150721\4 - Design\Plan Set\8. Traffic\US84_SPMSUM01_TO.dgn
PLOTTED: 12/21/2020

Scott A Arnold, P.E.

12/21/2020

Kimley»Horn F-928

© 2021

Texas Department of Transportation

PVMT MARKINGS SUMMARY

AT TOWNE OAKS DRIVE

SHEET 2 OF 2

FED.RD. DIV.NO.	PROJECT ID.	HIGHWAY NO.
6	(SEE TITLE SHEET)	US 84

STATE	DIST.	COUNTY	SHEET NO.
TEXAS	WAC	MCLENNAN	349
CONT.	SECT.	JOB	
0055	15	072	

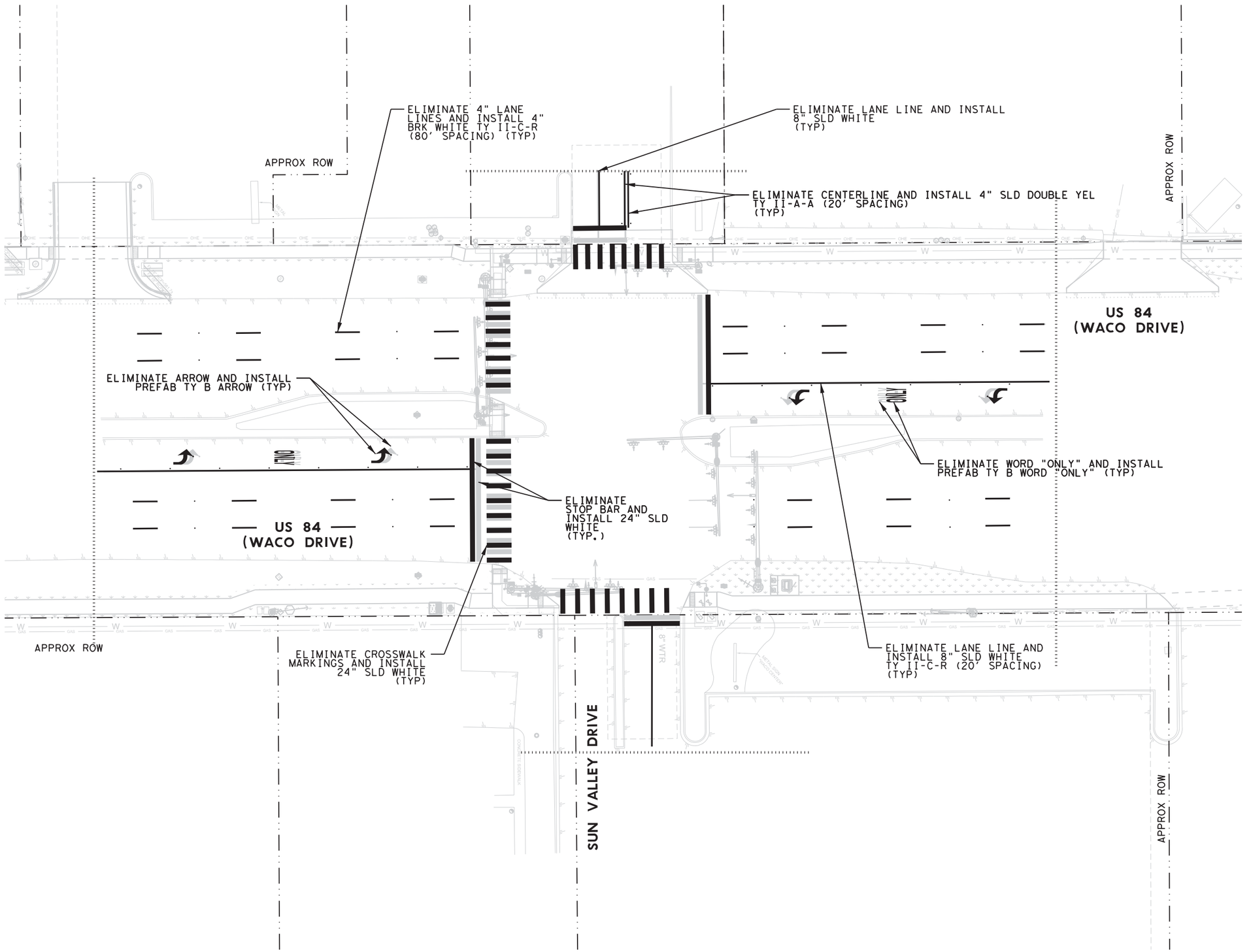

N

0' 20' 40'

LEGEND

LIMIT OF PAVEMENT MARKINGS

NOTES

1. INSTALLATION OF THE PROPOSED STOP BARS, PAVEMENT MARKING ARROWS, LANE LINE EXTENSIONS, AND LANE USE SIGNS (BOTH GROUND AND SIGNAL MOUNTED) MUST BE COORDINATED WITH THE SIGNAL TURN ON.
2. SEE PROPOSED TRAFFIC SIGNAL SHEETS FOR TY A SIGNS MOUNTED ON THE SIGNAL EQUIPMENT.
3. CONFIRM WITH THE ENGINEER PRIOR TO PLACEMENT OF THE LANE LINE EXTENSIONS.

STATE OF TEXAS — SCOTT R. ARNOLD — 96782 — LICENSED — PROFESSIONAL ENGINEER

Scott R. Arnold, P.E.

12/21/2020

Kimley»Horn F-928

© 2021

Texas Department of Transportation

PROPOSED PVMT MARKINGS

AT SUN VALLEY DRIVE

SHEET 1 OF 2

FED.RD. DIV.NO.	PROJECT ID.	HIGHWAY NO.
6	(SEE TITLE SHEET)	US 84

STATE	DIST.	COUNTY	SHEET NO.
TEXAS	WAC	MCLENNAN	350
CONT.	SECT.	JOB	
0055	15	072	

FILENAME: pw:\\kh-pw.bentley.com:kh-pw-01\Documents\01 Active Projects\TX-FTW-063586010 - US 84 (Waco Drive)\WAC 005515072\4 - Design\Plan Set\8. Traffic\US84_SPM01_SV.dgn
PLOTTED: 12/21/2020

PROJECT	US 84 (0055-15-072)										
SHEET	351										
		666 6036	666 6048	666 6224	666 6226	666 6230	666 6300	666 6315	668 6019	668 6027	672 6009	672 6010
		REFL PAV MRK TY I (W)8"(SLD)(100MIL)	REFL PAV MRK TY I (W)24"(SLD)(100MIL)	PAVEMENT SEALER 4"	PAVEMENT SEALER 8"	PAVEMENT SEALER 24"	RE PM W/RET REQ TY I (W)4"(BRK)(100MIL)	RE PM W/RET REQ TY I (Y)4"(SLD)(100MIL)	PREFAB PAV MRK TY B (W)(ARROW)	PREFAB PAV MRK TY B (W)(WORD)	REFL PAV MRKR TY II-A-A	REFL PAV MRKR TY II-C-R
TRF ID	TABLE	LF	LF	LF	LF	LF	LF	LF	EA	EA	EA	EA
PVMT MARKING	PVMT MARKING	365	465	350	365	465	300	50	4	2	4	31
SIGN	SIGN											
Grand Total		365	465	350	365	465	300	50	4	2	4	31

PROJECT	US 84 (0055-15-072)					
SHEET	351					
		677 6001	677 6003	677 6007	677 6008	677 6012
		ELIM EXT PAV MRK & MRKS (4")	ELIM EXT PAV MRK & MRKS (8")	ELIM EXT PAV MRK & MRKS (24")	ELIM EXT PAV MRK & MRKS (ARROW)	ELIM EXT PAV MRK & MRKS (WORD)
TRF ID	TABLE	LF	LF	LF	EA	EA
PVMT MARKING	PVMT MARKING	350	350	335	4	2
SIGN	SIGN					
Grand Total		350	350	335	4	2

Scott R. Arnold, P.E.

12/21/2020

Kimley»Horn F-928

© 2021

Texas Department of Transportation

PVMT MARKINGS SUMMARY

AT SUN VALLEY DRIVE

SHEET 2 OF 2

FED.RD. DIV.NO.	PROJECT ID.	HIGHWAY NO.
6	(SEE TITLE SHEET)	US 84

STATE	DIST.	COUNTY	SHEET NO.
TEXAS	WAC	MCLENNAN	351
CONT.	SECT.	JOB	
0055	15	072	

FILENAME: pw:\\kh-pw.bentley.com:kh-pw-01\Documents\01 Active Projects\TX-FTW-063586010 - US 84 (Waco Drive)\WAC 005515072\4 - Design\Plan Set\8. Traffic\US84_SPMSUM01_SV.dgn
PLOTTED: 12/21/2020

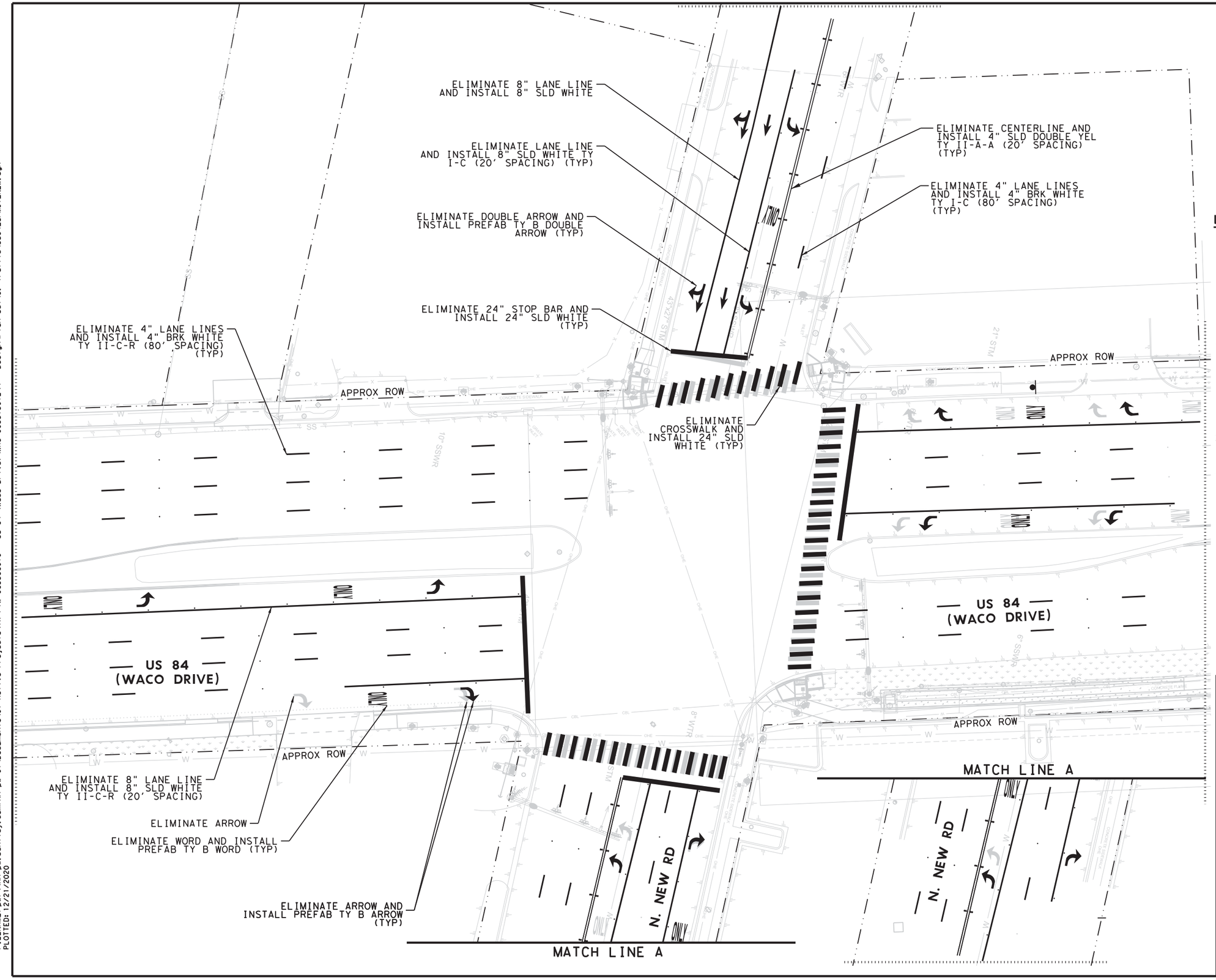

LEGEND

LIMIT OF PAVEMENT MARKINGS

NOTES

1. INSTALLATION OF THE PROPOSED STOP BARS, PAVEMENT MARKING ARROWS, LANE LINE EXTENSIONS, AND LANE USE SIGNS (BOTH GROUND AND SIGNAL MOUNTED) MUST BE COORDINATED WITH THE SIGNAL TURN ON.
2. SEE PROPOSED TRAFFIC SIGNAL SHEETS FOR TY A SIGNS MOUNTED ON THE SIGNAL EQUIPMENT.
3. CONFIRM WITH THE ENGINEER PRIOR TO PLACEMENT OF THE LANE LINE EXTENSIONS.

STATE OF TEXAS
SCOTT R. ARNOLD
96782
LICENSED
PROFESSIONAL ENGINEER

Scott R. Arnold, P.E.

12/21/2020

Kimley»Horn F-928

© 2021

Texas Department of Transportation

PROPOSED PVMT MARKINGS

AT N. NEW ROAD

SHEET 1 OF 2

FED.RD. DIV.NO.	PROJECT ID.	HIGHWAY NO.
6	(SEE TITLE SHEET)	US 84

STATE	DIST.	COUNTY	SHEET NO.
TEXAS	WAC	MCLENNAN	352
CONT.	SECT.	JOB	
0055	15	072	

FILENAME: pw:\\kh-pw.bentley.com:kh-pw-01\Documents\01 Active Projects\TX-FTW-063586010 - US 84 (Waco Drive)\WAC 005515072\4 - Design\Plan Set\8. Traffic\US84_SPM01_NEW.dgn
PLOTTED: 12/21/2020

PROJECT	US 84 (0055-15-072)											
SHEET	353											
		666 6036	666 6048	666 6224	666 6226	666 6230	666 6300	666 6315	668 6019	668 6020	668 6027	672 6007	672 6009
		REFL PAV MRK TY I (W)8"(SLD)(100MIL)	REFL PAV MRK TY I (W)24"(SLD)(100MIL)	PAVEMENT SEALER 4"	PAVEMENT SEALER 8"	PAVEMENT SEALER 24"	RE PM W/RET REQ TY I (W)4"(BRK)(100MIL)	RE PM W/RET REQ TY I (Y)4"(SLD)(100MIL)	PREFAB PAV MRK TY B (W)(ARROW)	PREFAB PAV MRK TY B (W)(DBL ARROW)	PREFAB PAV MRK TY B (W)(WORD)	REFL PAV MRKR TY I-C	REFL PAV MRKR TY II-A-A
TRF ID	TABLE	LF	LF	LF	LF	LF	LF	LF	EA	EA	EA	EA	EA
PVMT MARKING	PVMT MARKING	1145	655	1250	1145	655	650	600	15	2	3	30	30
SIGN	SIGN												
Grand Total		1145	655	1250	1145	655	650	600	15	2	3	30	30

PROJECT	US 84 (0055-15-072)							
SHEET	353							
		672 6010	677 6001	677 6003	677 6007	677 6008	677 6009	677 6012
		REFL PAV MRKR TY II-C-R	ELIM EXT PAV MRK & MRKS (4")	ELIM EXT PAV MRK & MRKS (8")	ELIM EXT PAV MRK & MRKS (24")	ELIM EXT PAV MRK & MRKS (ARROW)	ELIM EXT PAV MRK & MRKS (DBL ARROW)	ELIM EXT PAV MRK & MRKS (WORD)
TRF ID	TABLE	EA	LF	LF	LF	EA	EA	EA
PVMT MARKING	PVMT MARKING	56	1270	1145	685	15	2	9
SIGN	SIGN							
Grand Total		56	1270	1145	685	15	2	9

STATE OF TEXAS
SCOTT R. ARNOLD
96782
LICENSED
PROFESSIONAL ENGINEER

Scott R. Arnold, P.E.

12/21/2020

Kimley»Horn F-928

© 2021

Texas Department of Transportation

PVMT MARKINGS SUMMARY

AT N. NEW ROAD

SHEET 2 OF 2

FED.RD. DIV.NO.	PROJECT ID.	HIGHWAY NO.
6	(SEE TITLE SHEET)	US 84

STATE	DIST.	COUNTY	SHEET NO.
TEXAS	WAC	MCLENNAN	
CONT.	SECT.	JOB	353
0055	15	072	

FILENAME: pw:\\kh-pw.bentley.com:kh-pw-01\Documents\01 Active Projects\TX-FTW-063586010 - US 84 (Waco Drive)\WAC 005515072\4 - Design\Plan Set\8. Traffic\US84_SPMSUM01_NEW.dgn
PLOTTED: 12/21/2020

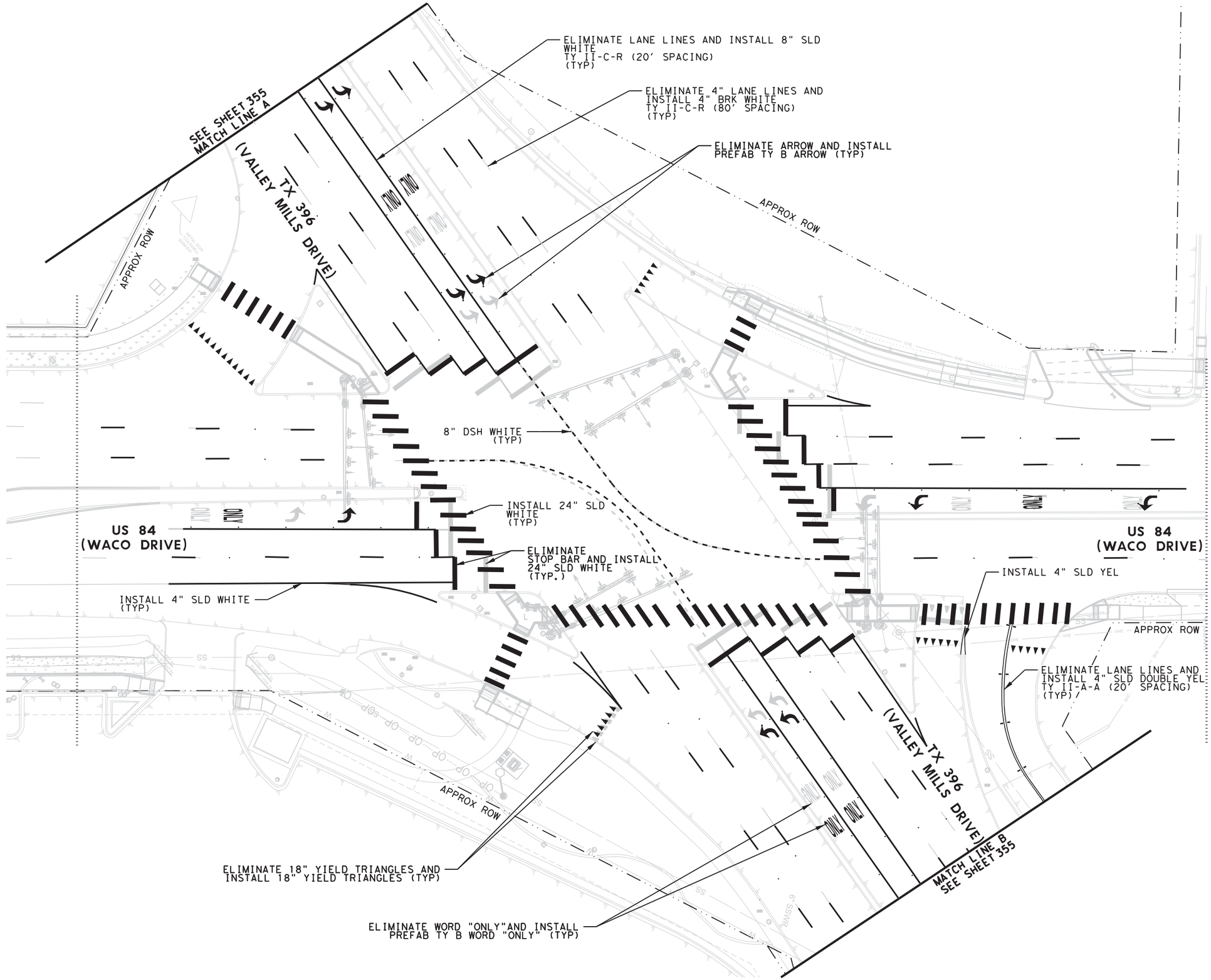

N

0' 20' 40'

LEGEND

..... LIMIT OF PAVEMENT MARKINGS

NOTES:

1. INSTALLATION OF THE PROPOSED STOP BARS, PAVEMENT MARKING ARROWS, LANE LINE EXTENSIONS, AND LANE USE SIGNS (BOTH GROUND AND SIGNAL MOUNTED) MUST BE COORDINATED WITH THE SIGNAL TURN ON.
2. SEE PROPOSED TRAFFIC SIGNAL SHEETS FOR TY A SIGNS MOUNTED ON THE SIGNAL EQUIPMENT.
3. CONFIRM WITH THE ENGINEER PRIOR TO PLACEMENT OF THE LANE LINE EXTENSIONS.

STATE OF TEXAS
SCOTT R. ARNOLD
96782
LICENSED
PROFESSIONAL ENGINEER

Scott R Arnold, P.E.
12/21/2020

Kimley»Horn F-928

© 2021

Texas Department of Transportation

PROPOSED PVMT MARKINGS

AT VALLEY MILLS DRIVE

SHEET 1 OF 2

FED. RD. DIV. NO.	PROJECT ID.		HIGHWAY NO.
6	(SEE TITLE SHEET)		US 84
STATE	DIST.	COUNTY	SHEET NO.
TEXAS	WAC	MCLENNAN	354
CONT.	SECT.	JOB	
0055	15	072	

FILENAME: pw:\\kh-pw.bentley.com:kh-pw-01\Documents\01 Active Projects\TX-FTW-063586010 - US 84 (Waco Drive)\WAC 005515072\4 - Design\Plan Set\8. Traffic\US84_SPM01_VM.dgn
PLOTTED: 12/21/2020

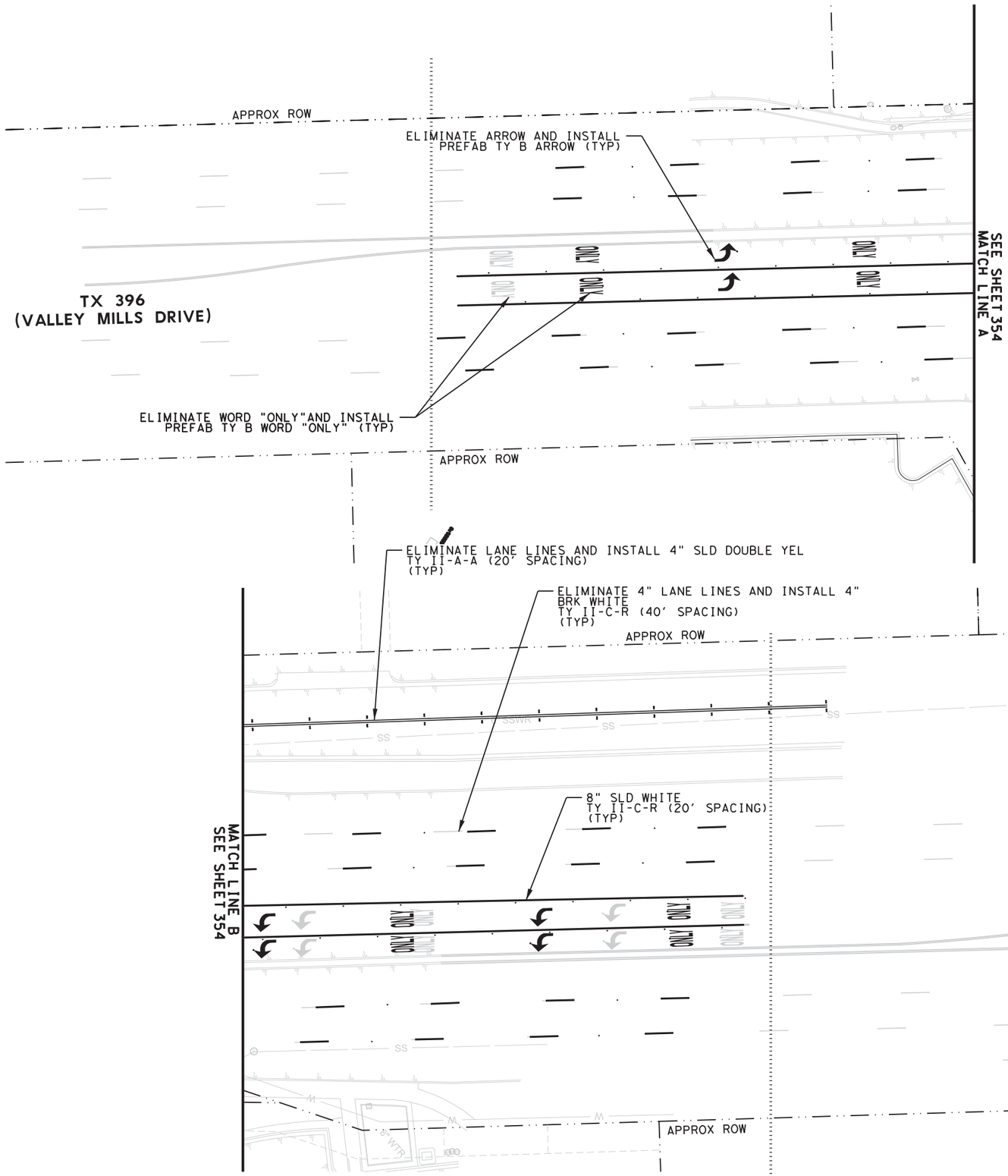

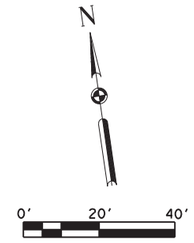

LEGEND

LIMIT OF PAVEMENT MARKINGS

NOTES:

1. INSTALLATION OF THE PROPOSED STOP BARS, PAVEMENT MARKING ARROWS, LANE LINE EXTENSIONS, AND LANE USE SIGNS (BOTH GROUND AND SIGNAL MOUNTED) MUST BE COORDINATED WITH THE SIGNAL TURN ON.
2. SEE PROPOSED TRAFFIC SIGNAL SHEETS FOR TY A SIGNS MOUNTED ON THE SIGNAL EQUIPMENT.
3. CONFIRM WITH THE ENGINEER PRIOR TO PLACEMENT OF THE LANE LINE EXTENSIONS.

STATE OF TEXAS
SCOTT R. ARNOLD
96782
LICENSED
PROFESSIONAL
ENGINEER

Scott R. Arnold, P.E.
12/21/2020

Kimley»Horn F-928

© 2021

Texas Department of Transportation

PROPOSED PVMT MARKINGS

AT VALLEY MILLS DRIVE

SHEET 2 OF 2

FED.RD. DIV.NO.	PROJECT ID.	HIGHWAY NO.
6	(SEE TITLE SHEET)	US 84

STATE	DIST.	COUNTY	SHEET NO.
TEXAS	WAC	MCLENNAN	355
CONT.	SECT.	JOB	
0055	15	072	

FILENAME: pw:\\kh-pw.bentley.com:kh-pw-01\Documents\01 Active Projects\TX-FTW-063586010 - US 84 (Waco Drive)\WAC 005515072\4 - Design\Plan Set\8. Traffic\US84_SPM02_VM.dgn
PLOTTED: 12/21/2020

PROJECT	US 84 (0055-15-072)
SHEET	356

		666 6030	666 6036	666 6048	666 6099	666 6224	666 6226	666 6230	666 6300	666 6303	666 6315	668 6019
		REFL PAV MRK TY I (W)8"(DOT)(100MIL)	REFL PAV MRK TY I (W)8"(SLD)(100MIL)	REFL PAV MRK TY I (W)24"(SLD)(100MIL)	REF PAV MRK TY I(W)18"(YLD TRI)(100MIL)	PAVEMENT SEALER 4"	PAVEMENT SEALER 8"	PAVEMENT SEALER 24"	RE PM W/RET REQ TY I (W)4"(BRK)(100MIL)	RE PM W/RET REQ TY I (W)4"(SLD)(100MIL)	RE PM W/RET REQ TY I (Y)4"(SLD)(100MIL)	PREFAB PAV MRK TY B (W)(ARROW)
TRF ID	TABLE	LF	LF	LF	EA	LF	LF	LF	LF	LF	LF	EA
PVMT MARKING	PVMT MARKING	305	1525	895	33	2055	1525	895	820	425	595	15
SIGN	SIGN											
Grand Total		305	1525	895	33	2055	1525	895	820	425	595	15

PROJECT	US 84 (0055-15-072)
SHEET	356

		668 6027	672 6007	672 6009	672 6010	677 6001	677 6003	677 6007	677 6008	677 6012	677 6018
		PREFAB PAV MRK TY B (W)(WORD)	REFL PAV MRKR TY I-C	REFL PAV MRKR TY II-A-A	REFL PAV MRKR TY II-C-R	ELIM EXT PAV MRK & MRKS (4")	ELIM EXT PAV MRK & MRKS (8")	ELIM EXT PAV MRK & MRKS (24")	ELIM EXT PAV MRK & MRKS (ARROW)	ELIM EXT PAV MRK & MRKS (WORD)	ELIM EXT PAV MRK & MRKS (18")(YLD TRI)
TRF ID	TABLE	EA	EA	EA	EA	LF	LF	LF	EA	EA	EA
PVMT MARKING	PVMT MARKING	14	76	30	93	465	1830	225	15	14	38
SIGN	SIGN										
Grand Total		14	76	30	93	465	1830	225	15	14	38

Scott R. Arnold, P.E.

12/21/2020

Kimley»Horn F-928

© 2021

Texas Department of Transportation

PVMT MARKINGS SUMMARY

AT VALLEY MILLS DRIVE

SHEET 3 OF 3

FED.RD. DIV.NO.	PROJECT ID.	HIGHWAY NO.
6	(SEE TITLE SHEET)	US 84

STATE	DIST.	COUNTY	SHEET NO.
TEXAS	WAC	MCLENNAN	356
CONT.	SECT.	JOB	
0055	15	072	

FILENAME: pw:\\kh-pw.bentley.com:kh-pw-01\Documents\01 Active Projects\TX-FTW-063586010 - US 84 (Waco Drive)\WAC 005515072\4 - Design\Plan Set\8. Traffic\US84_SPMSUM01_WM.dgn
PLOTTED: 12/21/2020

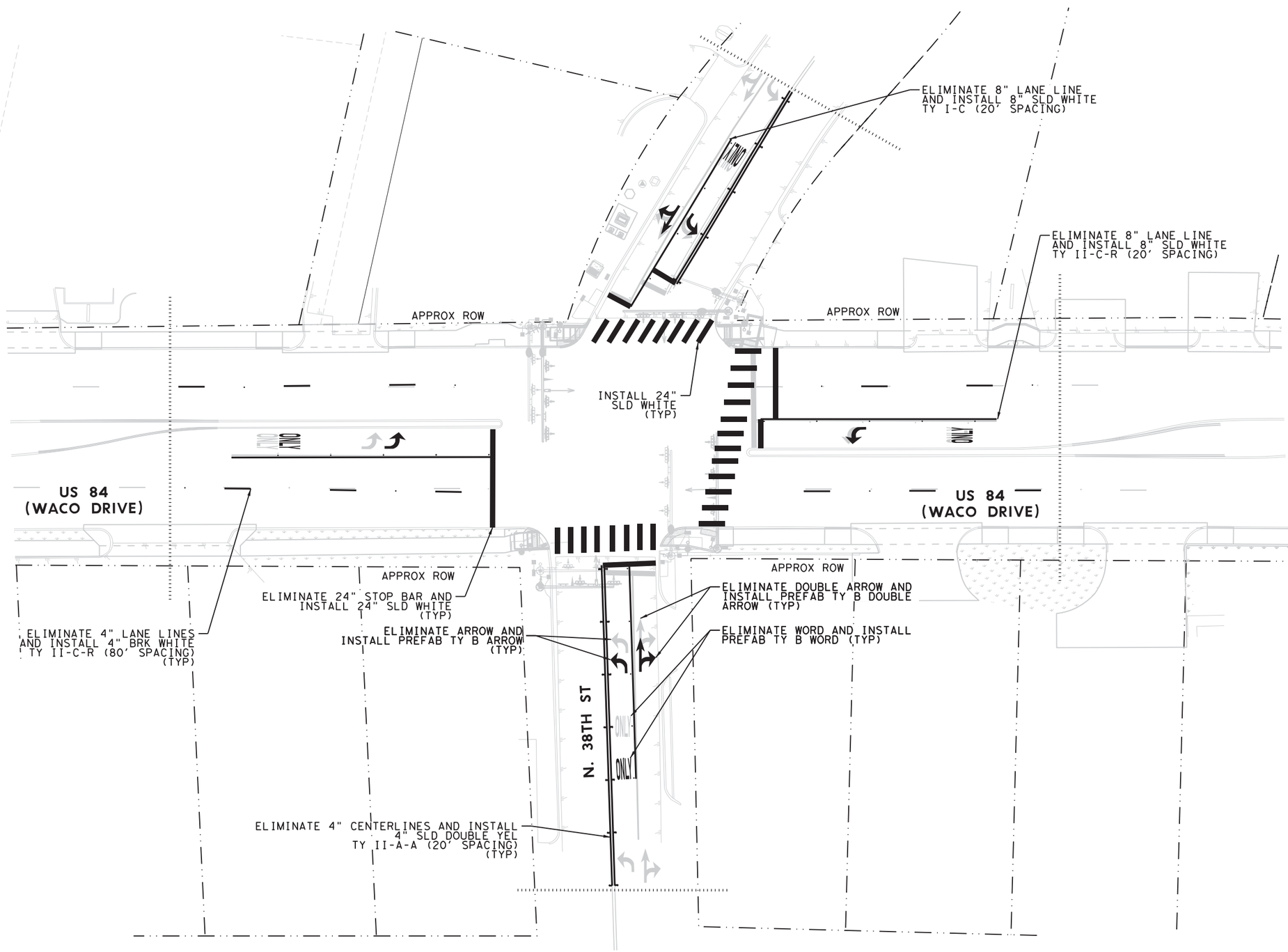

N

0' 20' 40'

LEGEND

LIMIT OF PAVEMENT MARKINGS

NOTES

1. INSTALLATION OF THE PROPOSED STOP BARS, PAVEMENT MARKING ARROWS, LANE LINE EXTENSIONS, AND LANE USE SIGNS (BOTH GROUND AND SIGNAL MOUNTED) MUST BE COORDINATED WITH THE SIGNAL TURN ON.
2. SEE PROPOSED TRAFFIC SIGNAL SHEETS FOR TY A SIGNS MOUNTED ON THE SIGNAL EQUIPMENT.
3. CONFIRM WITH THE ENGINEER PRIOR TO PLACEMENT OF THE LANE LINE EXTENSIONS.

STATE OF TEXAS SCOTT A. ARNOLD 96782 LICENSED PROFESSIONAL ENGINEER

Scott A. Arnold, P.E.

12/21/2020

Kimley»Horn F-928

© 2021

Texas Department of Transportation

PROPOSED PVMT MARKINGS

AT N. 38TH STREET

SHEET 1 OF 2

FED.RD. DIV.NO.	PROJECT ID.	HIGHWAY NO.
6	(SEE TITLE SHEET)	US 84

STATE	DIST.	COUNTY	SHEET NO.
TEXAS	WAC	MCLENNAN	357
CONT.	SECT.	JOB	
0055	15	072	

FILENAME: pw:\\kh-pw.bentley.com:kh-pw-01\Documents\01 Active Projects\TX-FTW-063586010 - US 84 (Waco Drive)\WAC 0055150724 - Design\Plan Set\8. Traffic\US84_SPM01_N38TH.dgn
PLOTTED: 12/21/2020

PROJECT	US 84 (0055-15-072)											
SHEET	358											
		666 6036	666 6048	666 6224	666 6226	666 6230	666 6300	666 6315	668 6019	668 6020	663 6027	672 6007	672 6009
		REFL PAV MRK TY I (W)8"(SLD)(100MIL)	REFL PAV MRK TY I (W)24"(SLD)(100MIL)	PAVEMENT SEALER 4"	PAVEMENT SEALER 8"	PAVEMENT SEALER 24"	RE PM W/RET REQ TY I (W)4"(BRK)(100MIL)	RE PM W/RET REQ TY I (Y)4"(SLD)(100MIL)	PREFAB PAV MRK TY B (W)(ARROW)	PREFAB PAV MRK TY B (W)(DBL ARROW)	PREFAB PAV MRK TY B (W)(WORD)	REFL PAV MRKR TY I-C	REFL PAV MRKR TY II-A-A
TRF ID	TABLE	LF	LF	LF	LF	LF	LF	LF	EA	EA	EA	EA	EA
PVMT MARKING	PVMT MARKING	340	400	520	340	400	120	410	4	2	4	9	24
SIGN	SIGN												
Grand Total		340	400	520	340	400	120	410	4	2	4	9	24

PROJECT	US 84 (0055-15-072)							
SHEET	358							
		672 6010	677 6001	677 6003	677 6007	677 6008	677 6009	677 6012
		REFL PAV MRKR TY II-C-R	ELIM EXT PAV MRK & MRKS (4")	ELIM EXT PAV MRK & MRKS (8")	ELIM EXT PAV MRK & MRKS (24")	ELIM EXT PAV MRK & MRKS (ARROW)	ELIM EXT PAV MRK & MRKS (DBL ARROW)	ELIM EXT PAV MRK & MRKS (WORD)
TRF ID	TABLE	EA	LF	LF	LF	EA	EA	EA
PVMT MARKING	PVMT MARKING	18	520	340	115	6	4	4
SIGN	SIGN							
Grand Total		18	520	340	115	6	4	4

Scott A. Arnold, P.E.

12/21/2020

Kimley»Horn F-928

© 2021

Texas Department of Transportation

PVMT MARKINGS SUMMARY

AT N. 38TH STREET

SHEET 2 OF 2

FED.RD. DIV.NO.	PROJECT ID.	HIGHWAY NO.
6	(SEE TITLE SHEET)	US 84

STATE	DIST.	COUNTY	SHEET NO.
TEXAS	WAC	MCLENNAN	358
CONT.	SECT.	JOB	
0055	15	072	

FILENAME: pw:\\kh-pw.bentley.com:kh-pw-01\Documents\01 Active Projects\TX-FTW-063586010 - US 84 (Waco Drive)\WAC 005515072\4 - Design\Plan Set\8. Traffic\US84_SPMSUM01_N38TH.dgn
PLOTTED: 12/21/2020

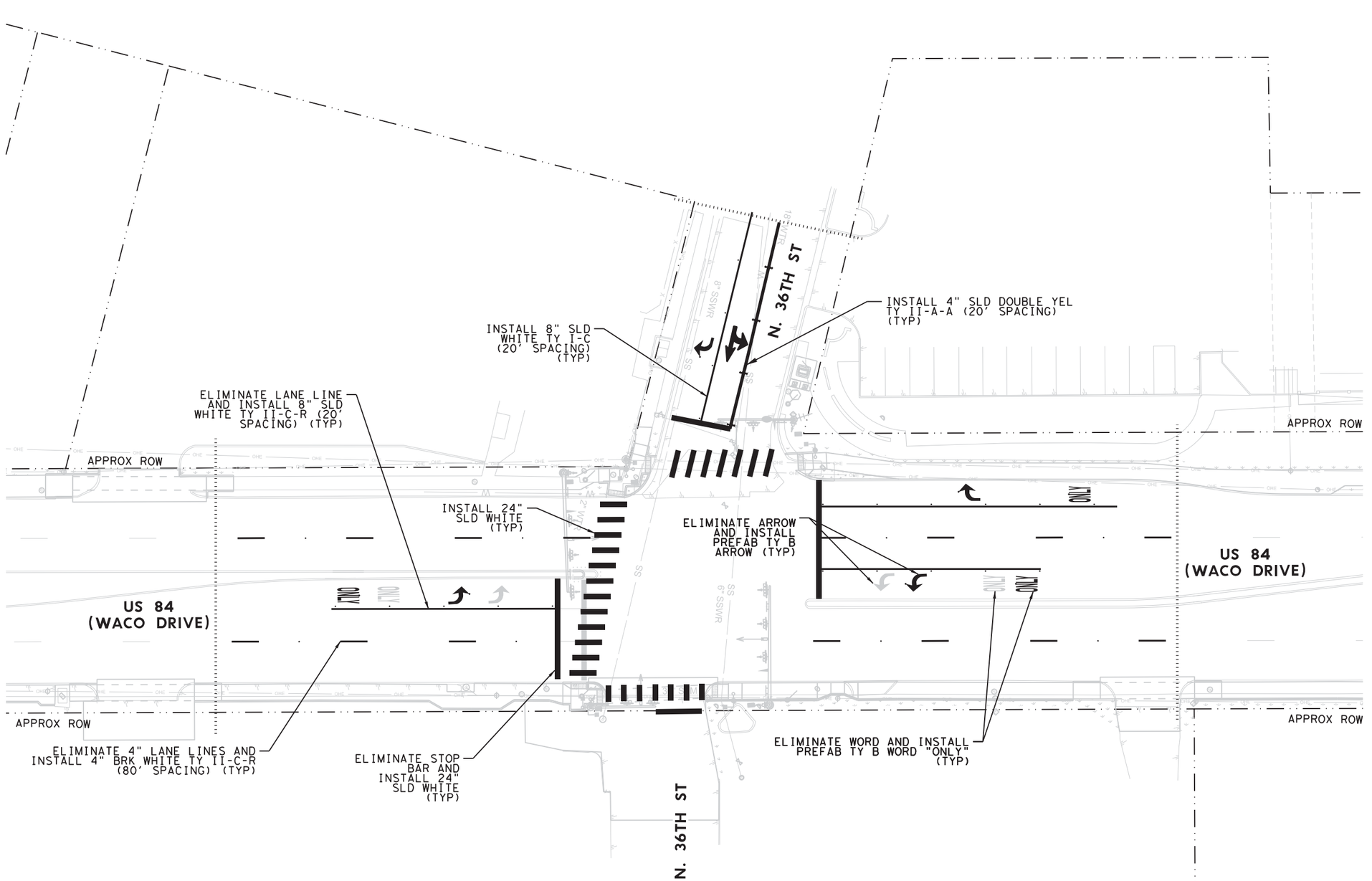

0' 20' 40'

LEGEND

LIMIT OF PAVEMENT MARKINGS

NOTES

1. INSTALLATION OF THE PROPOSED STOP BARS, PAVEMENT MARKING ARROWS, LANE LINE EXTENSIONS, AND LANE USE SIGNS (BOTH GROUND AND SIGNAL MOUNTED) MUST BE COORDINATED WITH THE SIGNAL TURN ON.
2. SEE PROPOSED TRAFFIC SIGNAL SHEETS FOR TY A SIGNS MOUNTED ON THE SIGNAL EQUIPMENT.
3. CONFIRM WITH THE ENGINEER PRIOR TO PLACEMENT OF THE LANE LINE EXTENSIONS.

STATE OF TEXAS
SCOTT R ARNOLD
96782
LICENSED
PROFESSIONAL ENGINEER

Scott R Arnold, P.E.

12/21/2020

Kimley»Horn F-928

© 2021

Texas Department of Transportation

PROPOSED PVMT MARKINGS

AT N. 36TH STREET

SHEET 1 OF 2

FED.RD. DIV.NO.	PROJECT ID.	HIGHWAY NO.
6	(SEE TITLE SHEET)	US 84

STATE	DIST.	COUNTY	SHEET NO.
TEXAS	WAC	MCLENNAN	359
CONT.	SECT.	JOB	
0055	15	072	

FILENAME: pw:\\kh-pw.bentley.com:kh-pw-01\Documents\01 Active Projects\TX-FTW-063586010 - US 84 (Waco Drive)\WAC 005515072\4 - Design\Plan Set\8. Traffic\US84_SPM01_N36TH.dgn
PLOTTED: 12/21/2020

PROJECT	US 84 (0055-15-072)
SHEET	360

		666 6036	666 6048	666 6224	666 6226	666 6230	666 6300	666 6315	668 6019	668 6020	668 6027	672 6007	672 6009
		REFL PAV MRK TY I (W)8"(SLD)(100MIL)	REFL PAV MRK TY I (W)24"(SLD)(100MIL)	PAVEMENT SEALER 4"	PAVEMENT SEALER 8"	PAVEMENT SEALER 24"	RE PM W/RET REQ TY I (W)4"(BRK)(100MIL)	RE PM W/RET REQ TY I (Y)4"(SLD)(100MIL)	PREFAB PAV MRK TY B (W)(ARROW)	PREFAB PAV MRK TY B (W)(DBL ARROW)	PREFAB PAV MRK TY B (W)(WORD)	REFL PAV MRKR TY I-C	REFL PAV MRKR TY II-A-A
TRF ID	TABLE	LF	LF	LF	LF	LF	LF	LF	EA	EA	EA	EA	EA
PVMT MARKING	PVMT MARKING	355	360	310	355	360	150	160	4	1	3	4	10
SIGN	SIGN												
Grand Total		355	360	310	355	360	150	160	4	1	3	4	10

PROJECT	US 84 (0055-15-072)
SHEET	360

		672 6010	677 6001	677 6003	677 6007	677 6008	677 6009	677 6012
		REFL PAV MRKR TY II-C-R	ELIM EXT PAV MRK & MRKS (4")	ELIM EXT PAV MRK & MRKS (8")	ELIM EXT PAV MRK & MRKS (24")	ELIM EXT PAV MRK & MRKS (ARROW)	ELIM EXT PAV MRK & MRKS (DBL ARROW)	ELIM EXT PAV MRK & MRKS (WORD)
TRF ID	TABLE	EA	LF	LF	LF	EA	EA	EA
PVMT MARKING	PVMT MARKING	24	320	355	105	4	1	3
SIGN	SIGN							
Grand Total		24	320	355	105	4	1	3

STATE OF TEXAS
SCOTT R. ARNOLD
96782
LICENSED
PROFESSIONAL ENGINEER

Scott R. Arnold, P.E.

12/21/2020

Kimley»Horn F-928

© 2021

Texas Department of Transportation

PVMT MARKINGS SUMMARY

AT N. 36TH STREET

SHEET 2 OF 2

FED.RD. DIV.NO.	PROJECT ID.	HIGHWAY NO.
6	(SEE TITLE SHEET)	US 84

STATE	DIST.	COUNTY	SHEET NO.
TEXAS	WAC	MCLENNAN	360
CONT.	SECT.	JOB	
0055	15	072	

FILENAME: pw:\\kh-pw.bentley.com:kh-pw-01\Documents\01 Active Projects\TX-FTW-063586010 - US 84 (Waco Drive)\WAC 005515072\4 - Design\Plan Set\8. Traffic\US84_SPMSUM01_N36TH.dgn
PLOTTED: 12/21/2020

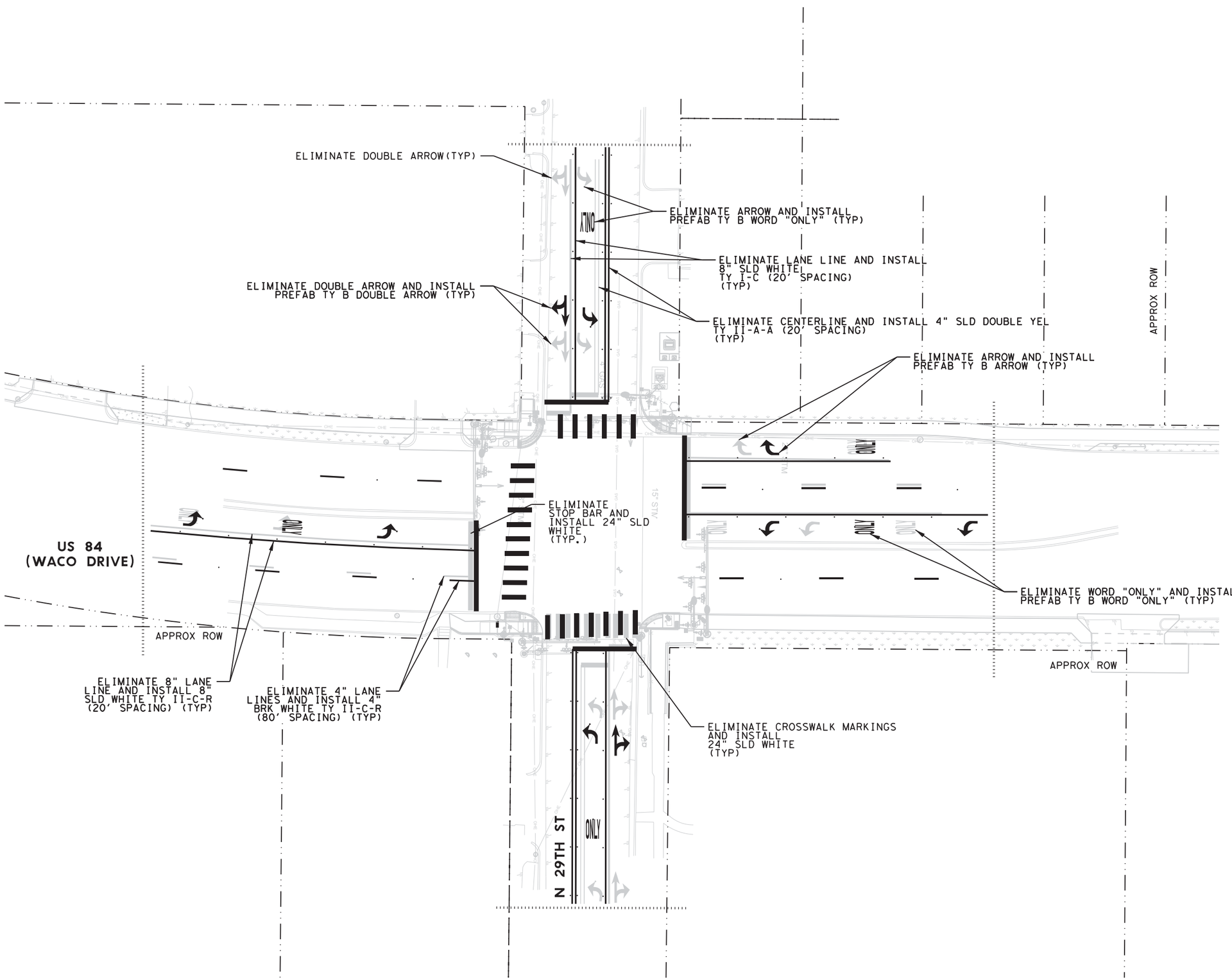

0' 20' 40'

LEGEND

LIMIT OF PAVEMENT MARKINGS

NOTES:

1. INSTALLATION OF THE PROPOSED STOP BARS, PAVEMENT MARKING ARROWS, LANE LINE EXTENSIONS, AND LANE USE SIGNS (BOTH GROUND AND SIGNAL MOUNTED) MUST BE COORDINATED WITH THE SIGNAL TURN ON.
2. SEE PROPOSED TRAFFIC SIGNAL SHEETS FOR TY A SIGNS MOUNTED ON THE SIGNAL EQUIPMENT.
3. CONFIRM WITH THE ENGINEER PRIOR TO PLACEMENT OF THE LANE LINE EXTENSIONS.

STATE OF TEXAS SCOTT R. ARNOLD 96782 LICENSED PROFESSIONAL ENGINEER

Scott R. Arnold, P.E.

12/21/2020

Kimley»Horn F-928

© 2021

Texas Department of Transportation

PROPOSED PVMT MARKINGS

AT N. 29TH STREET

SHEET 1 OF 2

FED. RD. DIV. NO.	PROJECT ID.	HIGHWAY NO.
6	(SEE TITLE SHEET)	US 84

STATE	DIST.	COUNTY	SHEET NO.
TEXAS	WAC	MCLENNAN	361
CONT.	SECT.	JOB	
0055	15	072	

FILENAME: pw:\\kh-pw.bentley.com:kh-pw-01\Documents\01 Active Projects\TX-FTW-063586010 - US 84 (Waco Drive)\WAC 005515072\4 - Design\Plan Set\8. Traffic\US84_SPM01_N29TH.dgn
PLOTTED: 12/21/2020

PROJECT	US 84 (0055-15-072)												
SHEET	362												
		666 6036	666 6048	666 6224	666 6226	666 6230	666 6300	666 6315	668 6019	668 6020	668 6027	672 6007	672 6009
		REFL PAV MRK TY I (W)8"(SLD)(100MIL)	REFL PAV MRK TY I (W)24"(SLD)(100MIL)	PAVEMENT SEALER 4"	PAVEMENT SEALER 8"	PAVEMENT SEALER 24"	RE PM W/RET REQ TY I (W)4"(BRK)(100MIL)	RE PM W/RET REQ TY I (Y)4"(SLD)(100MIL)	PREFAB PAV MRK TY B (W)(ARROW)	PREFAB PAV MRK TY B (W)(DBL ARROW)	PREFAB PAV MRK TY B (W)(WORD)	REFL PAV MRKR TY I-C	REFL PAV MRKR TY II-A-A
TRF ID	TABLE	LF	LF	LF	LF	LF	LF	LF	EA	EA	EA	EA	EA
PVMT MARKING	PVMT MARKING	555	365	550	555	365	130	420	7	2	5	12	24
SIGN	SIGN												
Grand Total		555	365	550	555	365	130	420	7	2	5	12	24

PROJECT	US 84 (0055-15-072)							
SHEET	362							
		672 6010	677 6001	677 6003	677 6007	677 6008	677 6009	677 6012
		REFL PAV MRKR TY II-C-R	ELIM EXT PAV MRK & MRKS (4")	ELIM EXT PAV MRK & MRKS (8")	ELIM EXT PAV MRK & MRKS (24")	ELIM EXT PAV MRK & MRKS (ARROW)	ELIM EXT PAV MRK & MRKS (DBL ARROW)	ELIM EXT PAV MRK & MRKS (WORD)
TRF ID	TABLE	EA	LF	LF	LF	EA	EA	EA
PVMT MARKING	PVMT MARKING	24	400	630	225	7	4	4
SIGN	SIGN							
Grand Total		24	400	630	225	7	4	4

Scott R. Arnold, P.E.

12/21/2020

Kimley»Horn F-928

© 2021

Texas Department of Transportation

PVMT MARKINGS SUMMARY

AT N. 29TH STREET

SHEET 2 OF 2

FED.RD. DIV.NO.	PROJECT ID.	HIGHWAY NO.
6	(SEE TITLE SHEET)	US 84

STATE	DIST.	COUNTY	SHEET NO.
TEXAS	WAC	MCLENNAN	
CONT.	SECT.	JOB	362
0055	15	072	

FILENAME: pw:\\kh-pw.bentley.com:kh-pw-01\Documents\01 Active Projects\TX-FTW-063586010 - US 84 (Waco Drive)\WAC 005515072\4 - Design\Plan Set\8. Traffic\US84_SPMSUM01_N29TH.dgn
PLOTTED: 12/21/2020

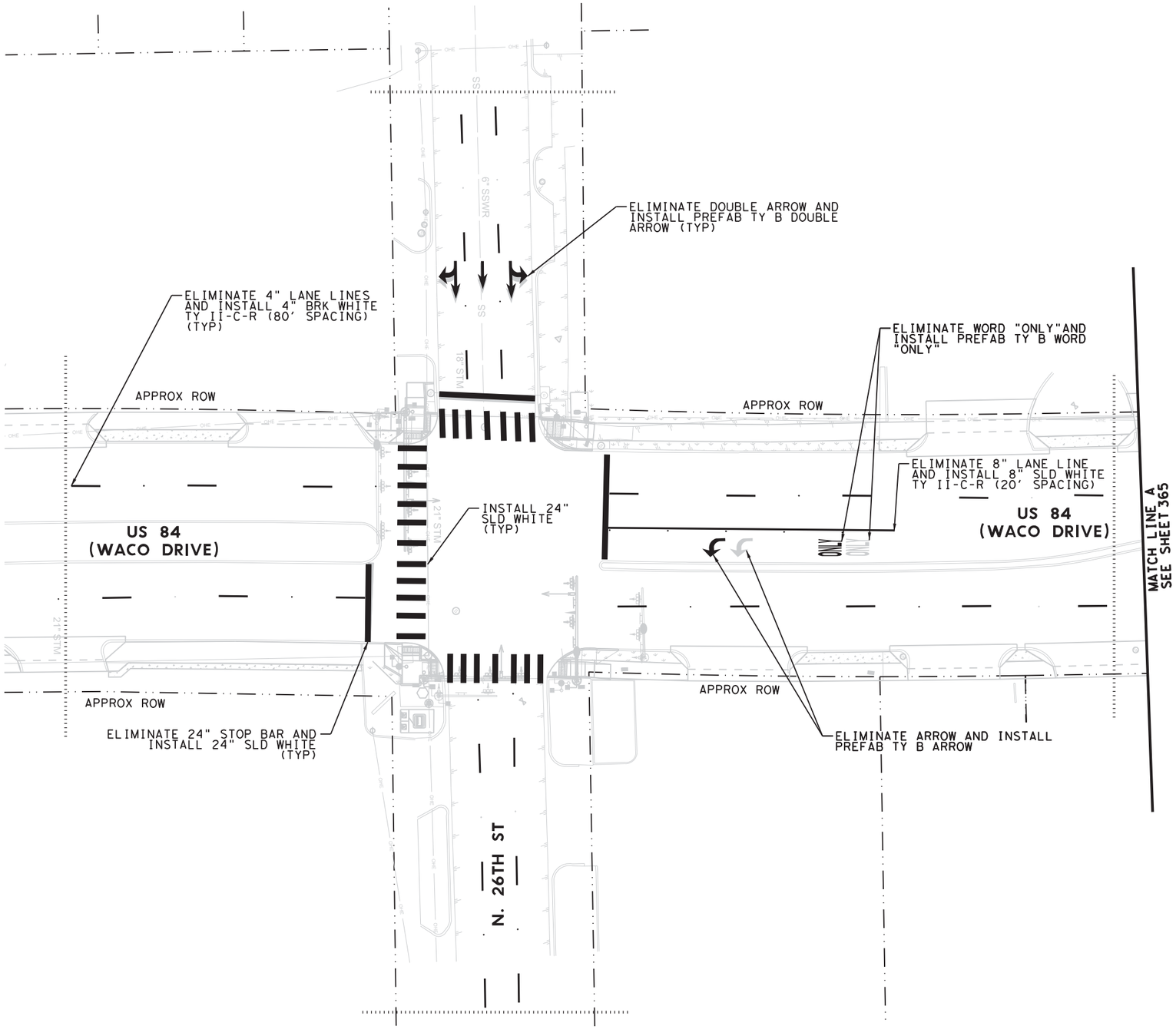

N

0' 20' 40'

LEGEND

LIMIT OF PAVEMENT MARKINGS

NOTES

1. INSTALLATION OF THE PROPOSED STOP BARS, PAVEMENT MARKING ARROWS, LANE LINE EXTENSIONS, AND LANE USE SIGNS (BOTH GROUND AND SIGNAL MOUNTED) MUST BE COORDINATED WITH THE SIGNAL TURN ON.
2. SEE PROPOSED TRAFFIC SIGNAL SHEETS FOR TY A SIGNS MOUNTED ON THE SIGNAL EQUIPMENT.
3. CONFIRM WITH THE ENGINEER PRIOR TO PLACEMENT OF THE LANE LINE EXTENSIONS.

STATE OF TEXAS
SCOTT R. ARNOLD
95782
LICENSED
PROFESSIONAL ENGINEER

Scott R. Arnold, P.E.
12/21/2020

Kimley»Horn F-928

© 2021

Texas Department of Transportation

PROPOSED PVMT MARKINGS

AT N. 26TH STREET

SHEET 1 OF 2

FED.RD. DIV.NO.	PROJECT ID.	HIGHWAY NO.
6	(SEE TITLE SHEET)	US 84

STATE	DIST.	COUNTY	SHEET NO.
TEXAS	WAC	MCLENNAN	363
CONT.	SECT.	JOB	
0055	15	072	

FILENAME: pw:\\kh-pw.bentley.com:kh-pw-01\Documents\01 Active Projects\TX-FTW-063586010 - US 84 (Waco Drive)\WAC 0055150724 - Design\Plan Set\8. Traffic\US84_SPM01_N26TH.dgn
PLOTTED: 12/21/2020

PROJECT	US 84 (0055-15-072)											
SHEET	364											
		666 6036	666 6048	666 6224	666 6226	666 6230	666 6300	668 6019	668 6020	668 6027	672 6010	677 6001	677 6003
		REFL PAV MRK TY I (W)8"(SLD)(100MIL)	REFL PAV MRK TY I (W)24"(SLD)(100MIL)	PAVEMENT SEALER 4"	PAVEMENT SEALER 8"	PAVEMENT SEALER 24"	RE PM W/RET REQ TY I (W)4"(BRK)(100MIL)	PREFAB PAV MRK TY B (W)(ARROW)	PREFAB PAV MRK TY B (W)(DBL ARROW)	PREFAB PAV MRK TY B (W)(WORD)	REFL PAV MRKR TY II-C-R	ELIM EXT PAV MRK & MRKS (4")	ELIM EXT PAV MRK & MRKS (8")
TRF ID	TABLE	LF	LF	LF	LF	LF	LF	EA	EA	EA	EA	LF	LF
PVMT MARKING	PVMT MARKING	100	350	280	100	350	280	2	2	1	18	280	100
Grand Total		100	350	280	100	350	280	2	2	1	18	280	100

PROJECT	US 84 (0055-15-072)				
SHEET	364				
		677 6007	677 6008	677 6009	677 6012
		ELIM EXT PAV MRK & MRKS (24")	ELIM EXT PAV MRK & MRKS (ARROW)	ELIM EXT PAV MRK & MRKS (DBL ARROW)	ELIM EXT PAV MRK & MRKS (WORD)
TRF ID	TABLE	LF	EA	EA	EA
PVMT MARKING	PVMT MARKING	100	2	2	1
Grand Total		100	2	2	1

Scott R. Arnold, P.E.

12/21/2020

Kimley»Horn F-928

© 2021

Texas Department of Transportation

PVMT MARKINGS SUMMARY

AT N. 26TH STREET

SHEET 2 OF 2

FED.RD. DIV.NO.	PROJECT ID.	HIGHWAY NO.
6	(SEE TITLE SHEET)	US 84

STATE	DIST.	COUNTY	SHEET NO.
TEXAS	WAC	MCLENNAN	364
CONT.	SECT.	JOB	
0055	15	072	

FILENAME: pw:\\kh-pw.bentley.com:kh-pw-01\Documents\01 Active Projects\TX-FTW-063586010 - US 84 (Waco Drive)\WAC 005515072\4 - Design\Plan Set\8. Traffic\US84_SPMSUM01_N26TH.dgn
PLOTTED: 12/21/2020

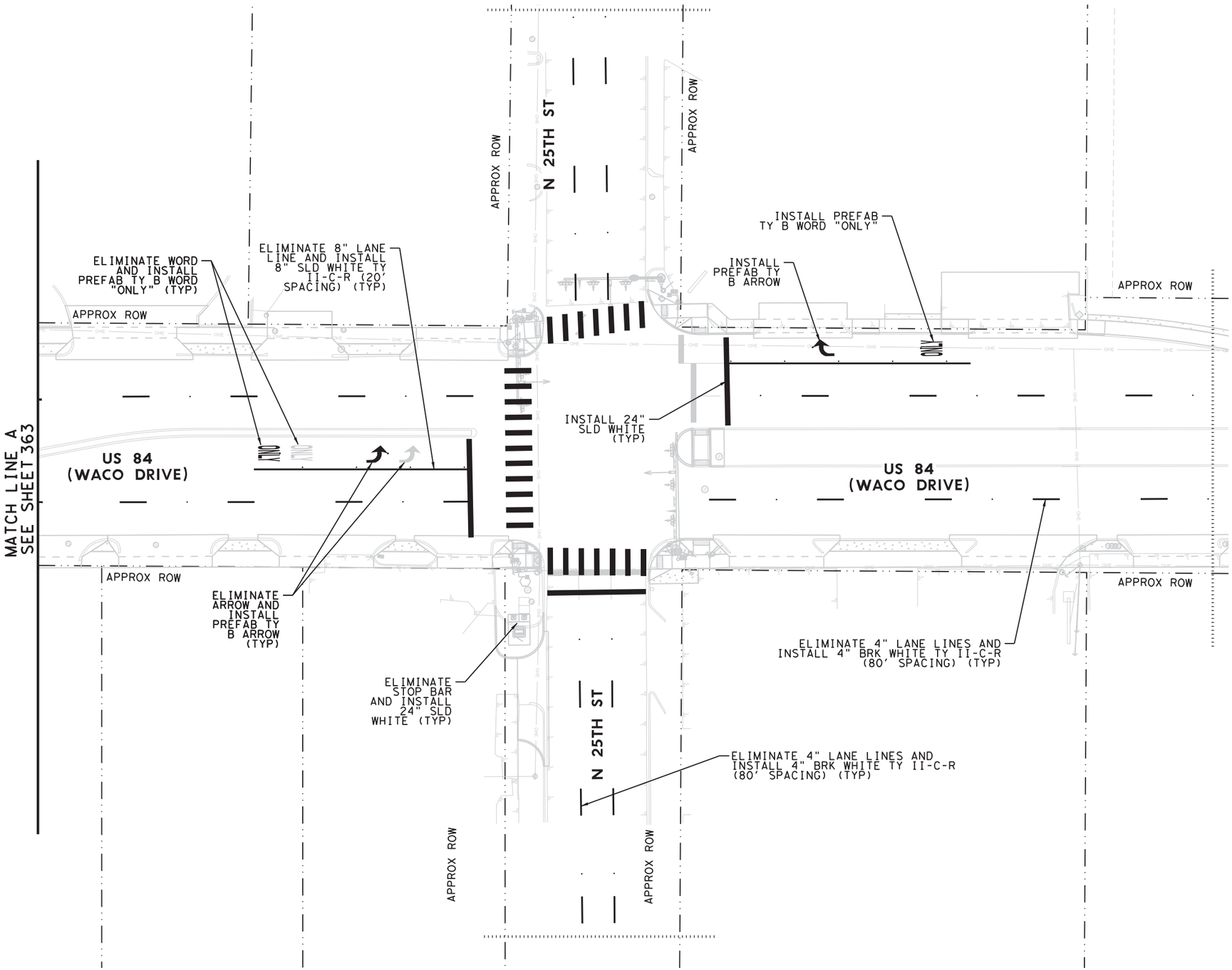

0' 20' 40'

LEGEND

LIMIT OF PAVEMENT MARKINGS

NOTES

1. INSTALLATION OF THE PROPOSED STOP BARS, PAVEMENT MARKING ARROWS, LANE LINE EXTENSIONS, AND LANE USE SIGNS (BOTH GROUND AND SIGNAL MOUNTED) MUST BE COORDINATED WITH THE SIGNAL TURN ON.
2. SEE PROPOSED TRAFFIC SIGNAL SHEETS FOR TY A SIGNS MOUNTED ON THE SIGNAL EQUIPMENT.
3. CONFIRM WITH THE ENGINEER PRIOR TO PLACEMENT OF THE LANE LINE EXTENSIONS.

STATE OF TEXAS
SCOTT R. ARNOLD
96782
LICENSED
PROFESSIONAL ENGINEER

Scott R. Arnold, P.E.
12/21/2020

Kimley»Horn F-928

© 2021

Texas Department of Transportation

PROPOSED PVMT MARKINGS

AT N. 25TH STREET

SHEET 1 OF 2

FED.RD. DIV.NO.	PROJECT ID.	HIGHWAY NO.
6	(SEE TITLE SHEET)	US 84

STATE	DIST.	COUNTY	SHEET NO.
TEXAS	WAC	MCLENNAN	365
CONT.	SECT.	JOB	
0055	15	072	

FILENAME: pw:\\kh-pw.bentley.com:kh-pw-01\Documents\01 Active Projects\TX-FTW-063586010 - US 84 (Waco Drive)\WAC 005515072\4 - Design\Plan Set\8. Traffic\US84_SPM01_N25TH.dgn
PLOTTED: 12/21/2020

PROJECT	US 84 (0055-15-072)												
SHEET	366												
		666 6036	666 6048	666 6224	666 6226	666 6230	666 6300	668 6019	668 6027	672 6010	677 6001	677 6003	677 6007
		REFL PAV MRK TY I (W)8"(SLD)(100MIL)	REFL PAV MRK TY I (W)24"(SLD)(100MIL)	PAVEMENT SEALER 4"	PAVEMENT SEALER 8"	PAVEMENT SEALER 24"	RE PM W/RET REQ TY I (W)4"(BRK)(100MIL)	PREFAB PAV MRK TY B (W)(ARROW)	PREFAB PAV MRK TY B (W)(WORD)	REFL PAV MRKR TY II-C-R	ELIM EXT PAV MRK & MRKS (4")	ELIM EXT PAV MRK & MRKS (8")	ELIM EXT PAV MRK & MRKS (24")
TRF ID	TABLE	LF	LF	LF	LF	LF	LF	EA	EA	EA	LF	LF	LF
PVMT MARKING	PVMT MARKING	170	355	290	170	355	290	2	2	27	290	170	70
SIGN	SIGN												
Grand Total		170	355	290	170	355	290	2	2	27	290	170	70

PROJECT	US 84 (0055-15-072)		
SHEET	366		
		677 6008	677 6012
		ELIM EXT PAV MRK & MRKS (ARROW)	ELIM EXT PAV MRK & MRKS (WORD)
TRF ID	TABLE	EA	EA
PVMT MARKING	PVMT MARKING	1	1
SIGN	SIGN		
Grand Total		1	1

Scott R. Arnold, P.E.

12/21/2020

Kimley»Horn F-928

© 2021

Texas Department of Transportation

PVMT MARKINGS SUMMARY

AT N. 25TH STREET

SHEET 2 OF 2

FED.RD. DIV.NO.	PROJECT ID.	HIGHWAY NO.
6	(SEE TITLE SHEET)	US 84

STATE	DIST.	COUNTY	SHEET NO.
TEXAS	WAC	MCLENNAN	366
CONT.	SECT.	JOB	
0055	15	072	

FILENAME: pw:\\kh-pw.bentley.com:kh-pw-01\Documents\01 Active Projects\TX-FTW-063586010 - US 84 (Waco Drive)\WAC 005515072\4 - Design\Plan Set\8. Traffic\US84_SPMSUM01_N25TH.dgn
PLOTTED: 12/21/2020

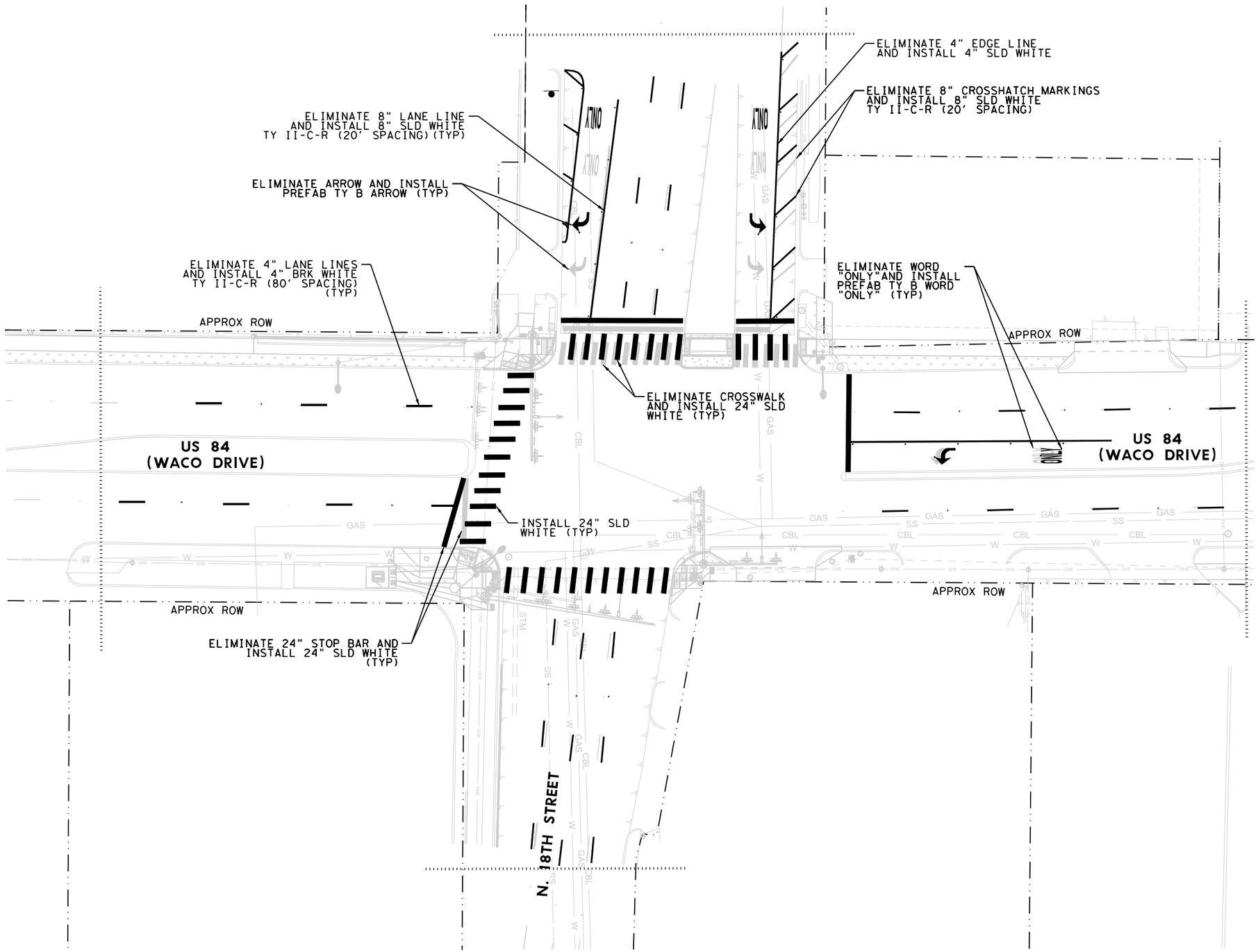

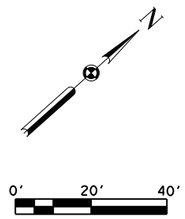

LEGEND

LIMIT OF PAVEMENT MARKINGS

NOTES

1. INSTALLATION OF THE PROPOSED STOP BARS, PAVEMENT MARKING ARROWS, LANE LINE EXTENSIONS, AND LANE USE SIGNS (BOTH GROUND AND SIGNAL MOUNTED) MUST BE COORDINATED WITH THE SIGNAL TURN ON.
2. SEE PROPOSED TRAFFIC SIGNAL SHEETS FOR TY A SIGNS MOUNTED ON THE SIGNAL EQUIPMENT.
3. CONFIRM WITH THE ENGINEER PRIOR TO PLACEMENT OF THE LANE LINE EXTENSIONS.

STATE OF TEXAS
SCOTT R. ARNOLD
96782
LICENSED
PROFESSIONAL ENGINEER

Scott R. Arnold, P.E.
12/21/2020

Kimley»Horn F-928

© 2021

Texas Department of Transportation

PROPOSED PVMT MARKINGS

AT N. 18TH STREET

SHEET 1 OF 2

FED.RD. DIV.NO.	PROJECT ID.	HIGHWAY NO.
6	(SEE TITLE SHEET)	US 84

STATE	DIST.	COUNTY	SHEET NO.
TEXAS	WAC	MCLENNAN	
CONT.	SECT.	JOB	367
0055	15	072	

FILENAME: pw:\\kh-pw.bentley.com:kh-pw-01\Documents\01 Active Projects\TX-FTW-063586010 - US 84 (Waco Drive)\WAC 0055150724 - Design\Plan Set\8. Traffic\US84_SPM01_N18TH.dgn
PLOTTED: 12/21/2020

PROJECT	US 84 (0055-15-072)
SHEET	368

		666 6036	666 6048	666 6224	666 6226	666 6230	666 6300	666 6303	668 6019	668 6027	672 6010	677 6001
		REFL PAV MRK TY I (W)8"(SLD)(100MIL)	REFL PAV MRK TY I (W)24"(SLD)(100MIL)	PAVEMENT SEALER 4"	PAVEMENT SEALER 8"	PAVEMENT SEALER 24"	RE PM W/RET REQ TY I (W)4"(BRK)(100MIL)	RE PM W/RET REQ TY I (W)4"(SLD)(100MIL)	PREFAB PAV MRK TY B (W)(ARROW)	PREFAB PAV MRK TY B (W)(WORD)	REFL PAV MRKR TY II-C-R	ELIM EXT PAV MRK & MRKS (4")
TRF ID	TABLE	LF	LF	LF	LF	LF	LF	LF	EA	EA	EA	LF
PVMT MARKING	PVMT MARKING	275	470	475	275	470	300	175	3	3	34	405
SIGN	SIGN											
Grand Total		275	470	475	275	470	300	175	3	3	34	405

PROJECT	US 84 (0055-15-072)
SHEET	368

		677 6003	677 6007	677 6008	677 6012
		ELIM EXT PAV MRK & MRKS (8")	ELIM EXT PAV MRK & MRKS (24")	ELIM EXT PAV MRK & MRKS (ARROW)	ELIM EXT PAV MRK & MRKS (WORD)
TRF ID	TABLE	LF	LF	EA	EA
PVMT MARKING	PVMT MARKING	250	335	3	3
SIGN	SIGN				
Grand Total		250	335	3	3

Scott R. Arnold, P.E.

12/21/2020

Kimley»Horn F-928

© 2021

Texas Department of Transportation

PVMT MARKINGS SUMMARY

AT N. 18TH STREET

SHEET 2 OF 2

FED.RD. DIV.NO.	PROJECT ID.	HIGHWAY NO.
6	(SEE TITLE SHEET)	US 84

STATE	DIST.	COUNTY	SHEET NO.
TEXAS	WAC	MCLENNAN	368
CONT.	SECT.	JOB	
0055	15	072	

FILENAME: pw:\\kh-pw.bentley.com:kh-pw-01\Documents\01 Active Projects\TX-FTW-063586010 - US 84 (Waco Drive)\WAC 005515072\4 - Design\Plan Set\8. Traffic\US84_SPMSUM01_N18TH.dgn
PLOTTED: 12/21/2020

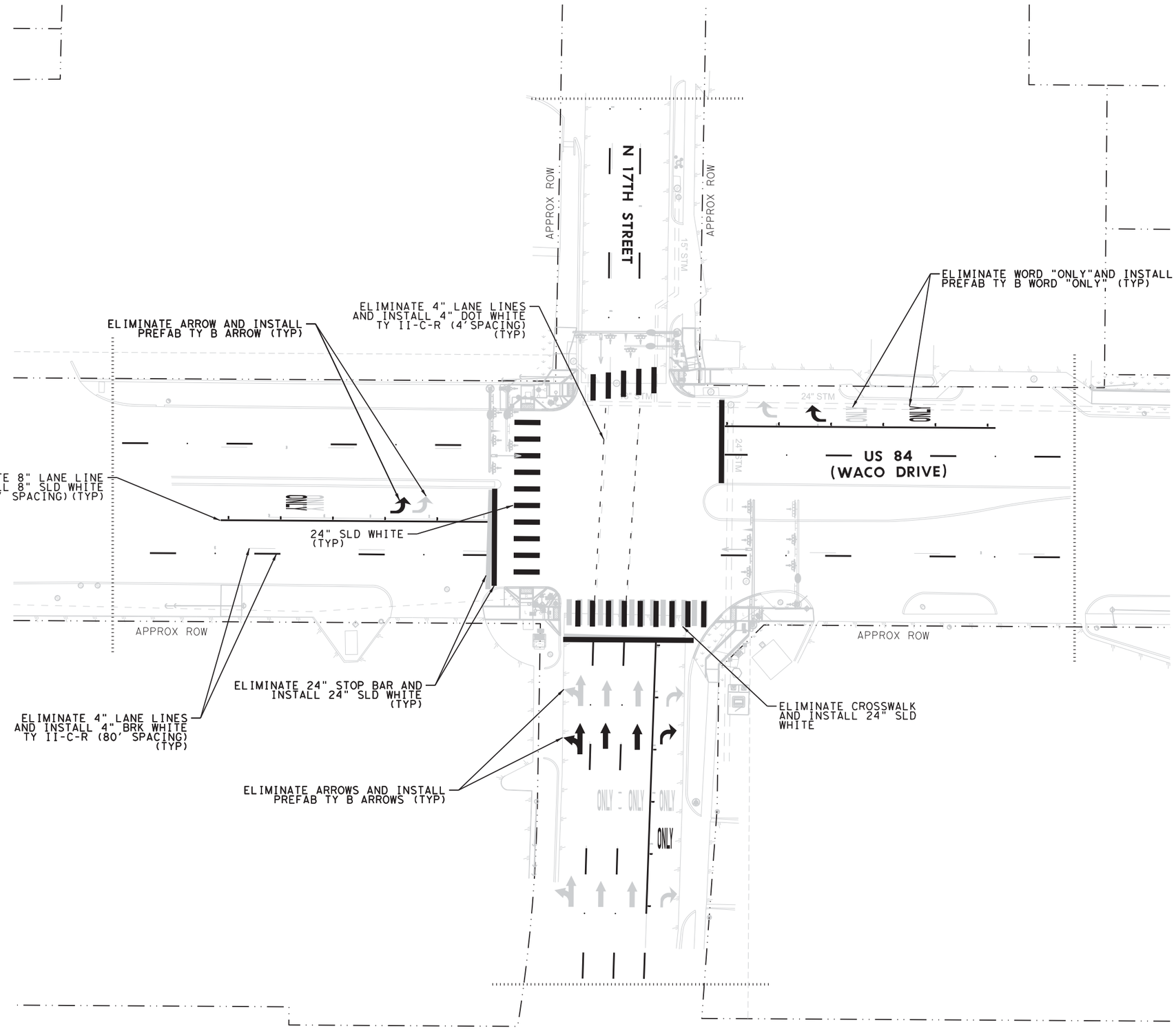

0' 20' 40'

LEGEND

LIMIT OF PAVEMENT MARKINGS

NOTES

1. INSTALLATION OF THE PROPOSED STOP BARS, PAVEMENT MARKING ARROWS, LANE LINE EXTENSIONS, AND LANE USE SIGNS (BOTH GROUND AND SIGNAL MOUNTED) MUST BE COORDINATED WITH THE SIGNAL TURN ON.
2. SEE PROPOSED TRAFFIC SIGNAL SHEETS FOR TY A SIGNS MOUNTED ON THE SIGNAL EQUIPMENT.
3. CONFIRM WITH THE ENGINEER PRIOR TO PLACEMENT OF THE LANE LINE EXTENSIONS.

STATE OF TEXAS SCOTT R ARNOLD 96782 LICENSED PROFESSIONAL ENGINEER

Scott R Arnold, P.E.

12/21/2020

Kimley»Horn F-928

© 2021

Texas Department of Transportation

PROPOSED PVMT MARKINGS

AT N. 17TH STREET

SHEET 1 OF 2

FED. RD. DIV. NO.	PROJECT ID.	HIGHWAY NO.
6	(SEE TITLE SHEET)	US 84

STATE	DIST.	COUNTY	SHEET NO.
TEXAS	WAC	MCLENNAN	369
CONT.	SECT.	JOB	
0055	15	072	

FILENAME: pw:\\kh-pw.bentley.com:kh-pw-01\Documents\01 Active Projects\TX-FTW-063586010 - US 84 (Waco Drive)\WAC 0055150721\4 - Design\Plan Set\8. Traffic\US84_SPM01_N17TH.dgn
PLOTTED: 12/21/2020

PROJECT	US 84 (0055-15-072)												
SHEET	370												
		666 6006	666 6036	666 6048	666 6224	666 6226	666 6230	666 6300	668 6019	668 6020	668 6027	672 6010	677 6001
		REFL PAV MRK TY I (W)4"(DOT)(100MIL)	REFL PAV MRK TY I (W)8"(SLD)(100MIL)	REFL PAV MRK TY I (W)24"(SLD)(100MIL)	PAVEMENT SEALER 4"	PAVEMENT SEALER 8"	PAVEMENT SEALER 24"	RE PM W/RET REQ TY I (W)4"(BRK)(100MIL)	PREFAB PAV MRK TY B (W)(ARROW)	PREFAB PAV MRK TY B (W)(DBL ARROW)	PREFAB PAV MRK TY B (W)(WORD)	REFL PAV MRKR TY II-C-R	ELIM EXT PAV MRK & MRKS (4")
TRF ID	TABLE	LF	LF	LF	LF	LF	LF	LF	EA	EA	EA	EA	LF
PVMT MARKING	PVMT MARKING	52	315	360	360	315	360	290	5	1	3	33	325
SIGN	SIGN												
Grand Total		52	315	360	360	315	360	290	5	1	3	33	325

PROJECT	US 84 (0055-15-072)					
SHEET	370					
		677 6003	677 6007	677 6008	677 6009	677 6012
		ELIM EXT PAV MRK & MRKS (8")	ELIM EXT PAV MRK & MRKS (24")	ELIM EXT PAV MRK & MRKS (ARROW)	ELIM EXT PAV MRK & MRKS (DBL ARROW)	ELIM EXT PAV MRK & MRKS (WORD)
TRF ID	TABLE	LF	LF	EA	EA	EA
PVMT MARKING	PVMT MARKING	265	260	8	2	5
SIGN	SIGN					
Grand Total		265	260	8	2	5

Scott R Arnold, P.E.

12/21/2020

Kimley»Horn F-928

© 2021

Texas Department of Transportation

PVMT MARKINGS SUMMARY

AT N. 17TH STREET

SHEET 2 OF 2

FED. RD. DIV. NO.	PROJECT ID.	HIGHWAY NO.
6	(SEE TITLE SHEET)	US 84

STATE	DIST.	COUNTY	SHEET NO.
TEXAS	WAC	MCLENNAN	370
CONT.	SECT.	JOB	
0055	15	072	

FILENAME: pw:\\kh-pw.bentley.com:kh-pw-01\Documents\01 Active Projects\TX-FTW-063586010 - US 84 (Waco Drive)\WAC 005515072\4 - Design\Plan Set\8. Traffic\US84_SPMSUM01_N17TH.dgn
PLOTTED: 12/21/2020

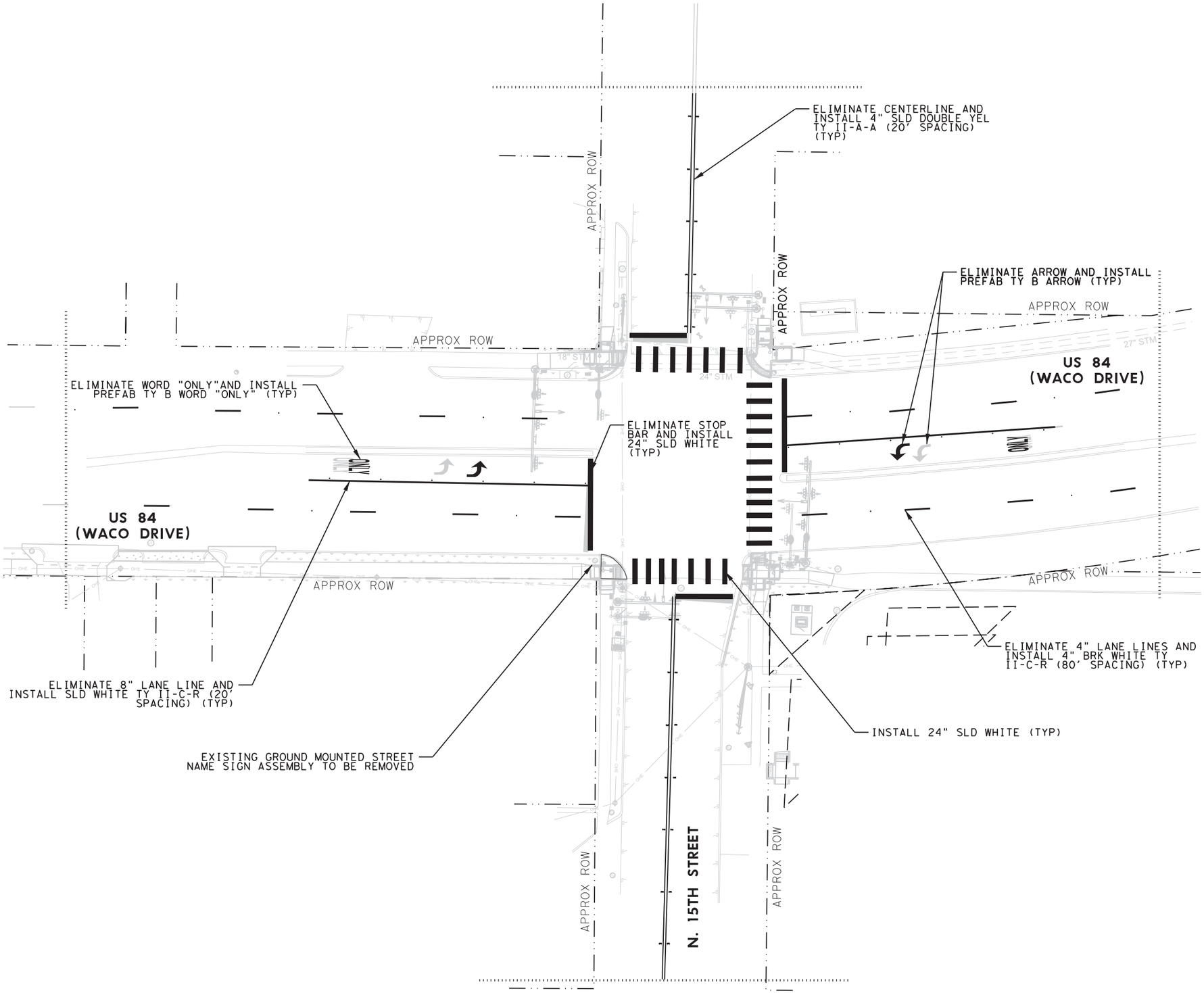

N

0' 20' 40'

LEGEND

LIMIT OF PAVEMENT MARKINGS

NOTES:

1. INSTALLATION OF THE PROPOSED STOP BARS, PAVEMENT MARKING ARROWS, LANE LINE EXTENSIONS, AND LANE USE SIGNS (BOTH GROUND AND SIGNAL MOUNTED) MUST BE COORDINATED WITH THE SIGNAL TURN ON.
2. SEE PROPOSED TRAFFIC SIGNAL SHEETS FOR TY A SIGNS MOUNTED ON THE SIGNAL EQUIPMENT.
3. CONFIRM WITH THE ENGINEER PRIOR TO PLACEMENT OF THE LANE LINE EXTENSIONS.

STATE OF TEXAS
SCOTT R. ARNOLD
96782
LICENSED
PROFESSIONAL ENGINEER

Scott R Arnold, P.E.
12/21/2020

Kimley»Horn F-928

© 2021

Texas Department of Transportation

PROPOSED PVMT MARKINGS

AT N. 15TH STREET

SHEET 1 OF 2

FED. RD. DIV. NO.	PROJECT ID.	HIGHWAY NO.
6	(SEE TITLE SHEET)	US 84

STATE	DIST.	COUNTY	SHEET NO.
TEXAS	WAC	MCLENNAN	371
CONT.	SECT.	JOB	
0055	15	072	

FILENAME: pw:\\kh-pw.bentley.com:kh-pw-01\Documents\01 Active Projects\TX-FTW-063586010 - US 84 (Waco Drive)\WAC 0055150724 - Design\Plan Set\8. Traffic\US84_SPM01_N15TH.dgn
PLOTTED: 12/21/2020

PROJECT	US 84 (0055-15-072)												
SHEET	372												
		666 6036	666 6048	666 6224	666 6226	666 6230	666 6300	666 6315	668 6019	668 6027	672 6009	672 6010	677 6001
		REFL PAV MRK TY I (W)8"(SLD)(100MIL)	REFL PAV MRK TY I (W)24"(SLD)(100MIL)	PAVEMENT SEALER 4"	PAVEMENT SEALER 8"	PAVEMENT SEALER 24"	RE PM W/RET REQ TY I (W)4"(BRK)(100MIL)	RE PM W/RET REQ TY I (Y)4"(SLD)(100MIL)	PREFAB PAV MRK TY B (W)(ARROW)	PREFAB PAV MRK TY B (W)(WORD)	REFL PAV MRKR TY II-A-A	REFL PAV MRKR TY II-C-R	ELIM EXT PAV MRK & MRKS (4")
TRF ID	TABLE	LF	LF	LF	LF	LF	LF	LF	EA	EA	EA	EA	LF
PVMT MARKING	PVMT MARKING	215	380	670	215	380	180	490	2	2	24	21	680
SIGN	SIGN												
Grand Total		215	380	670	215	380	180	490	2	2	24	21	680

PROJECT	US 84 (0055-15-072)				
SHEET	372				
		677 6003	677 6007	677 6008	677 6012
		ELIM EXT PAV MRK & MRKS (8")	ELIM EXT PAV MRK & MRKS (24")	ELIM EXT PAV MRK & MRKS (ARROW)	ELIM EXT PAV MRK & MRKS (WORD)
TRF ID	TABLE	LF	LF	EA	EA
PVMT MARKING	PVMT MARKING	215	120	2	2
SIGN	SIGN				
Grand Total		215	120	2	2

FILENAME: pw:\\kh-pw.bentley.com:kh-pw-01\Documents\01 Active Projects\TX-FTW-063586010 - US 84 (Waco Drive)\WAC 005515072\4 - Design\Plan Set\8. Traffic\US84_SPMSUM01_N15TH.dgn
PLOTTED: 12/21/2020

Scott R. Arnold, P.E.

12/21/2020

Kimley»Horn F-928

© 2021

Texas Department of Transportation

PVMT MARKINGS SUMMARY

AT N. 15TH STREET

SHEET 2 OF 2

FED. RD. DIV. NO.	PROJECT ID.	HIGHWAY NO.
6	(SEE TITLE SHEET)	US 84

STATE	DIST.	COUNTY	SHEET NO.
TEXAS	WAC	MCLENNAN	372
CONT.	SECT.	JOB	
0055	15	072	

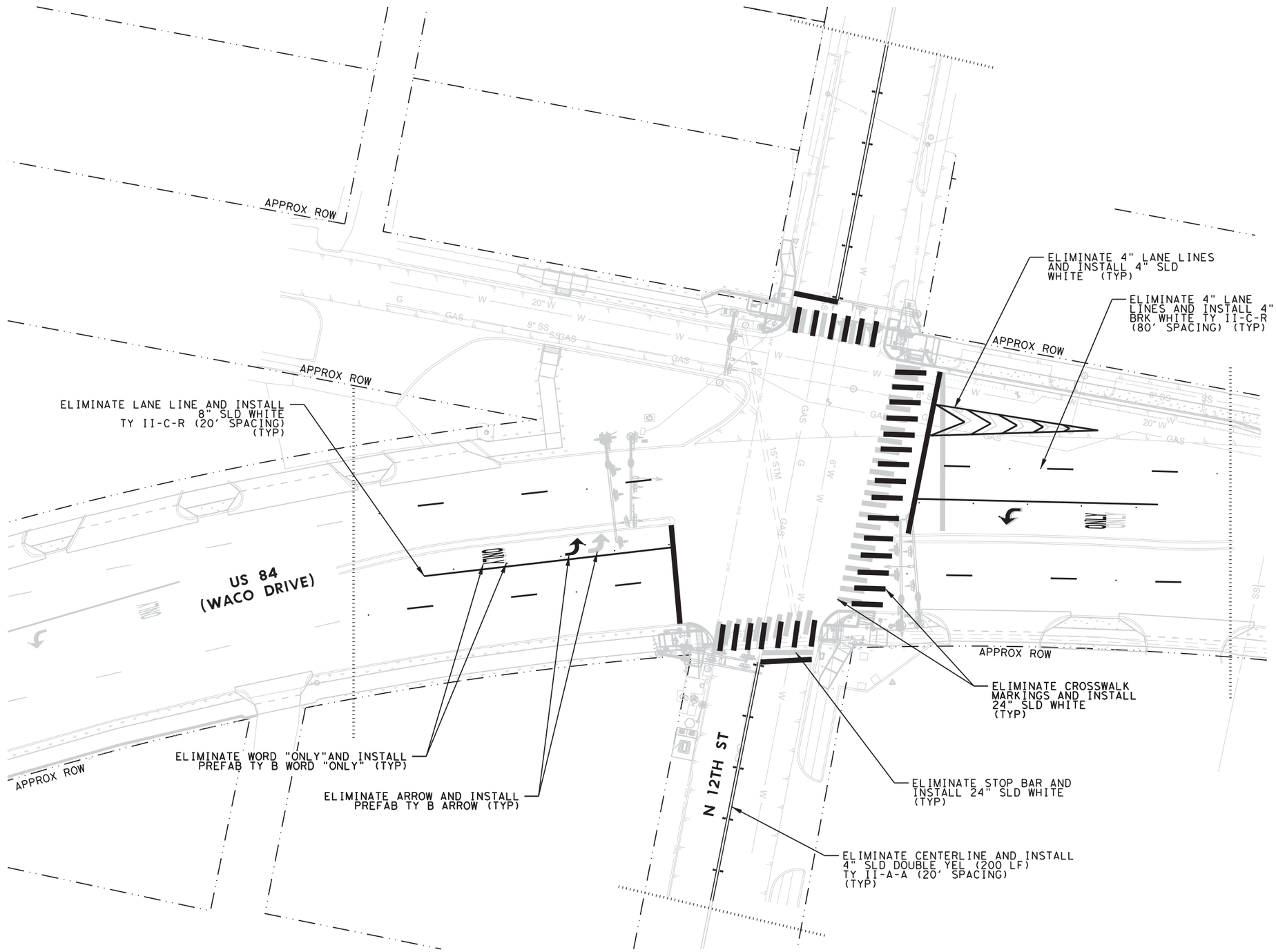

N

0' 20' 40'

LEGEND

..... LIMIT OF PAVEMENT MARKINGS

NOTES

1. INSTALLATION OF THE PROPOSED STOP BARS, PAVEMENT MARKING ARROWS, LANE LINE EXTENSIONS, AND LANE USE SIGNS (BOTH GROUND AND SIGNAL MOUNTED) MUST BE COORDINATED WITH THE SIGNAL TURN ON.
2. SEE PROPOSED TRAFFIC SIGNAL SHEETS FOR TY A SIGNS MOUNTED ON THE SIGNAL EQUIPMENT.
3. CONFIRM WITH THE ENGINEER PRIOR TO PLACEMENT OF THE LANE LINE EXTENSIONS.

STATE OF TEXAS
SCOTT R. ARNOLD
96782
LICENSED
PROFESSIONAL ENGINEER

Scott R. Arnold, P.E.
12/21/2020

Kimley»Horn F-928

© 2021
Texas Department of Transportation

PROPOSED PVMT MARKINGS

AT N. 12TH STREET

SHEET 1 OF 2

FED.RD. DIV.NO.	PROJECT ID.		HIGHWAY NO.
6	(SEE TITLE SHEET)		US 84
STATE	DIST.	COUNTY	SHEET NO.
TEXAS	WAC	MCLENNAN	373
CONT.	SECT.	JOB	
0055	15	072	

FILENAME: pw:\\kh-pw.bentley.com:kh-pw-01\Documents\01 Active Projects\TX-FTW-063586010 - US 84 (Waco Drive)\WAC 0055150721\4 - Design\Plan Set\8. Traffic\US84_SPM01_N12TH.dgn
PLOTTED: 12/21/2020

PROJECT	US 84 (0055-15-072)											
SHEET	374											
		666 6036	666 6048	666 6224	666 6226	666 6230	666 6300	666 6303	666 6315	668 6019	668 6027	672 6009	672 6010
		REFL PAV MRK TY I (W)8"(SLD)(100MIL)	REFL PAV MRK TY I (W)24"(SLD)(100MIL)	PAVEMENT SEALER 4"	PAVEMENT SEALER 8"	PAVEMENT SEALER 24"	RE PM W/RET REQ TY I (W)4"(BRK)(100MIL)	RE PM W/RET REQ TY I (W)4"(SLD)(100MIL)	RE PM W/RET REQ TY I (Y)4"(SLD)(100MIL)	PREFAB PAV MRK TY B (W)(ARROW)	PREFAB PAV MRK TY B (W)(WORD)	REFL PAV MRKR TY II-A-A	REFL PAV MRKR TY II-C-R
TRF ID	TABLE	LF	LF	LF	LF	LF	LF	LF	LF	EA	EA	EA	EA
PVMT MARKING	PVMT MARKING	190	420	730	190	420	120	210	400	2	2	20	18
SIGN	SIGN												
Grand Total		190	420	730	190	420	120	210	400	2	2	20	18

PROJECT	US 84 (0055-15-072)					
SHEET	374					
		677 6001	677 6003	677 6007	677 6008	677 6012
		ELIM EXT PAV MRK & MRKS (4")	ELIM EXT PAV MRK & MRKS (8")	ELIM EXT PAV MRK & MRKS (24")	ELIM EXT PAV MRK & MRKS (ARROW)	ELIM EXT PAV MRK & MRKS (WORD)
TRF ID	TABLE	LF	LF	LF	EA	EA
PVMT MARKING	PVMT MARKING	720	200	410	2	2
SIGN	SIGN					
Grand Total		720	200	410	2	2

FILENAME: pw:\\kh-pw.bentley.com:kh-pw-01\Documents\01 Active Projects\TX-FTW-063586010 - US 84 (Waco Drive)\WAC 0055150721\4 - Design\Plan Set\8. Traffic\US84_SPMSUM01_N12TH.dgn
PLOTTED: 12/21/2020

STATE OF TEXAS
SCOTT R. ARNOLD
96782
LICENSED
PROFESSIONAL ENGINEER

Scott R. Arnold, P.E.

12/21/2020

Kimley»Horn F-928

© 2021

Texas Department of Transportation

PVMT MARKINGS SUMMARY

AT N. 12TH STREET

SHEET 2 OF 2

FED.RD. DIV.NO.	PROJECT ID.	HIGHWAY NO.
6	(SEE TITLE SHEET)	US 84

STATE	DIST.	COUNTY	SHEET NO.
TEXAS	WAC	MCLENNAN	374
CONT.	SECT.	JOB	
0055	15	072	

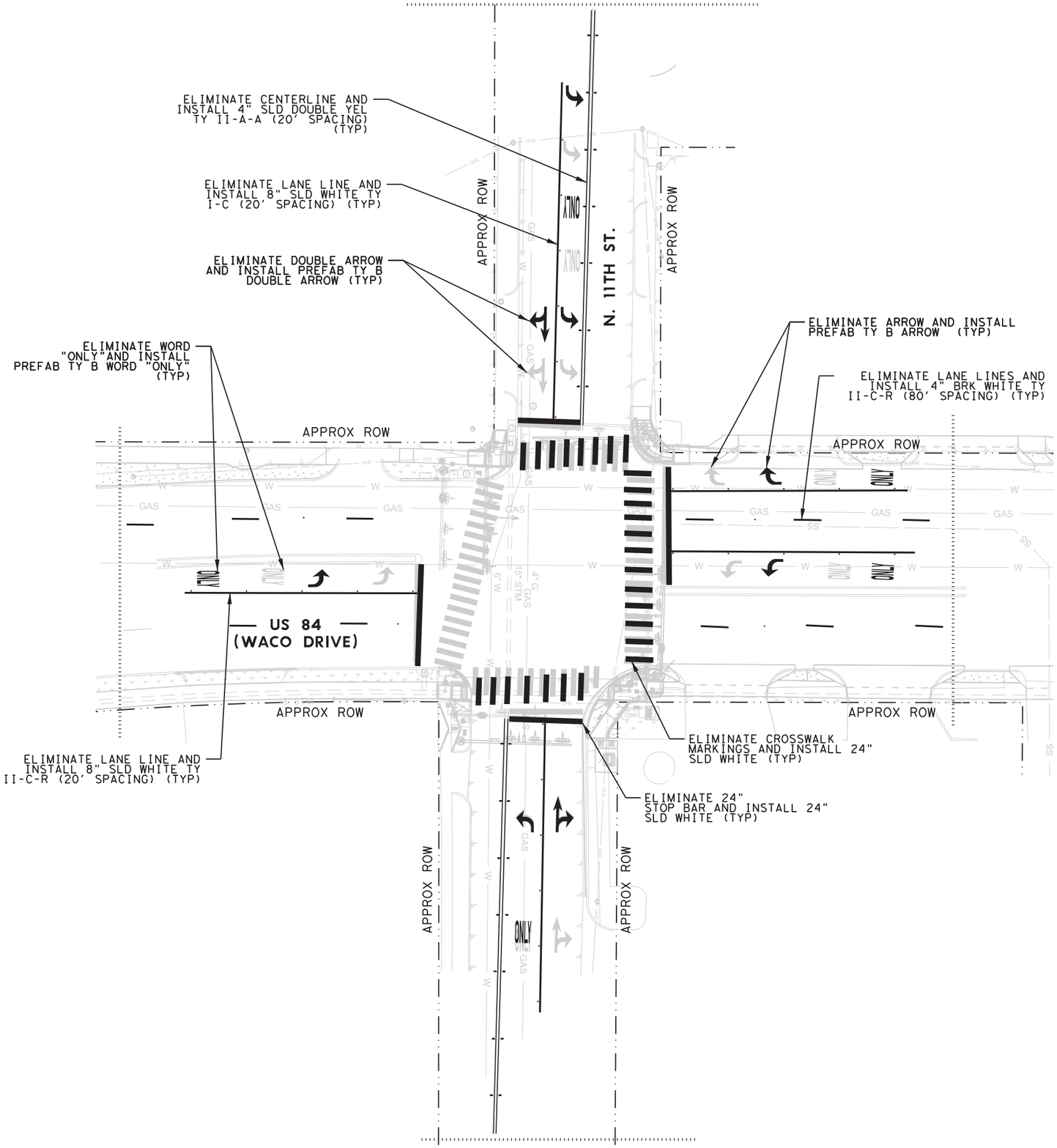

0' 20' 40'

LEGEND

..... LIMIT OF PAVEMENT MARKINGS

NOTES:

1. INSTALLATION OF THE PROPOSED STOP BARS, PAVEMENT MARKING ARROWS, LANE LINE EXTENSIONS, AND LANE USE SIGNS (BOTH GROUND AND SIGNAL MOUNTED) MUST BE COORDINATED WITH THE SIGNAL TURN ON.
2. SEE PROPOSED TRAFFIC SIGNAL SHEETS FOR TY A SIGNS MOUNTED ON THE SIGNAL EQUIPMENT.
3. CONFIRM WITH THE ENGINEER PRIOR TO PLACEMENT OF THE LANE LINE EXTENSIONS.

STATE OF TEXAS SCOTT R. ARNOLD 96782 LICENSED PROFESSIONAL ENGINEER

Scott R. Arnold, P.E.

12/21/2020

Kimley»Horn F-928

© 2021

Texas Department of Transportation

PROPOSED PVMT MARKINGS

AT N. 11TH STREET

SHEET 1 OF 2

FED.RD. DIV.NO.	PROJECT ID.	HIGHWAY NO.
6	(SEE TITLE SHEET)	US 84

STATE	DIST.	COUNTY	SHEET NO.
TEXAS	WAC	MCLENNAN	375
CONT.	SECT.	JOB	
0055	15	072	

FILENAME: pw:\\kh-pw.bentley.com:kh-pw-01\Documents\01 Active Projects\TX-FTW-063586010 - US 84 (Waco Drive)\WAC 0055150724 - Design\Plan Set\8. Traffic\US84_SPM01_N11TH.dgn
PLOTTED: 12/21/2020

PROJECT	US 84 (0055-15-072)
SHEET	376

		666 6036	666 6048	666 6224	666 6226	666 6230	666 6300	666 6315	668 6019	668 6020	668 6027	672 6007	672 6009
		REFL PAV MRK TY I (W)8"(SLD)(100MIL)	REFL PAV MRK TY I (W)24"(SLD)(100MIL)	PAVEMENT SEALER 4"	PAVEMENT SEALER 8"	PAVEMENT SEALER 24"	RE PM W/RET REQ TY I (W)4"(BRK)(100MIL)	RE PM W/RET REQ TY I (Y)4"(SLD)(100MIL)	PREFAB PAV MRK TY B (W)(ARROW)	PREFAB PAV MRK TY B (W)(DBL ARROW)	PREFAB PAV MRK TY B (W)(WORD)	REFL PAV MRKR TY I-C	REFL PAV MRKR TY II-A-A
TRF ID	TABLE	LF	LF	LF	LF	LF	LF	LF	EA	EA	EA	EA	EA
PVMT MARKING	PVMT MARKING	485	400	710	485	400	110	600	6	2	5	12	28
SIGN	SIGN												
Grand Total		485	400	710	485	400	110	600	6	2	5	12	28

PROJECT	US 84 (0055-15-072)
SHEET	376

		672 6010	677 6001	677 6003	677 6007	677 6008	677 6009	677 6012
		REFL PAV MRKR TY II-C-R	ELIM EXT PAV MRK & MRKS (4")	ELIM EXT PAV MRK & MRKS (8")	ELIM EXT PAV MRK & MRKS (24")	ELIM EXT PAV MRK & MRKS (ARROW)	ELIM EXT PAV MRK & MRKS (DBL ARROW)	ELIM EXT PAV MRK & MRKS (WORD)
TRF ID	TABLE	EA	LF	LF	LF	EA	EA	EA
PVMT MARKING	PVMT MARKING	20	710	485	710	6	3	5
SIGN	SIGN							
Grand Total		20	710	485	710	6	3	5

Scott R. Arnold, P.E.

12/21/2020

Kimley»Horn F-928

© 2021

Texas Department of Transportation

PVMT MARKINGS SUMMARY

AT N. 11TH STREET

SHEET 2 OF 2

FED.RD. DIV.NO.	PROJECT ID.	HIGHWAY NO.
6	(SEE TITLE SHEET)	US 84

STATE	DIST.	COUNTY	SHEET NO.
TEXAS	WAC	MCLENNAN	376
CONT.	SECT.	JOB	
0055	15	072	

FILENAME: pw:\\kh-pw.bentley.com:kh-pw-01\Documents\01 Active Projects\TX-FTW-063586010 - US 84 (Waco Drive)\WAC 005515072\4 - Design\Plan Set\8. Traffic\US84_SPMSUM01_N11TH.dgn
PLOTTED: 12/21/2020

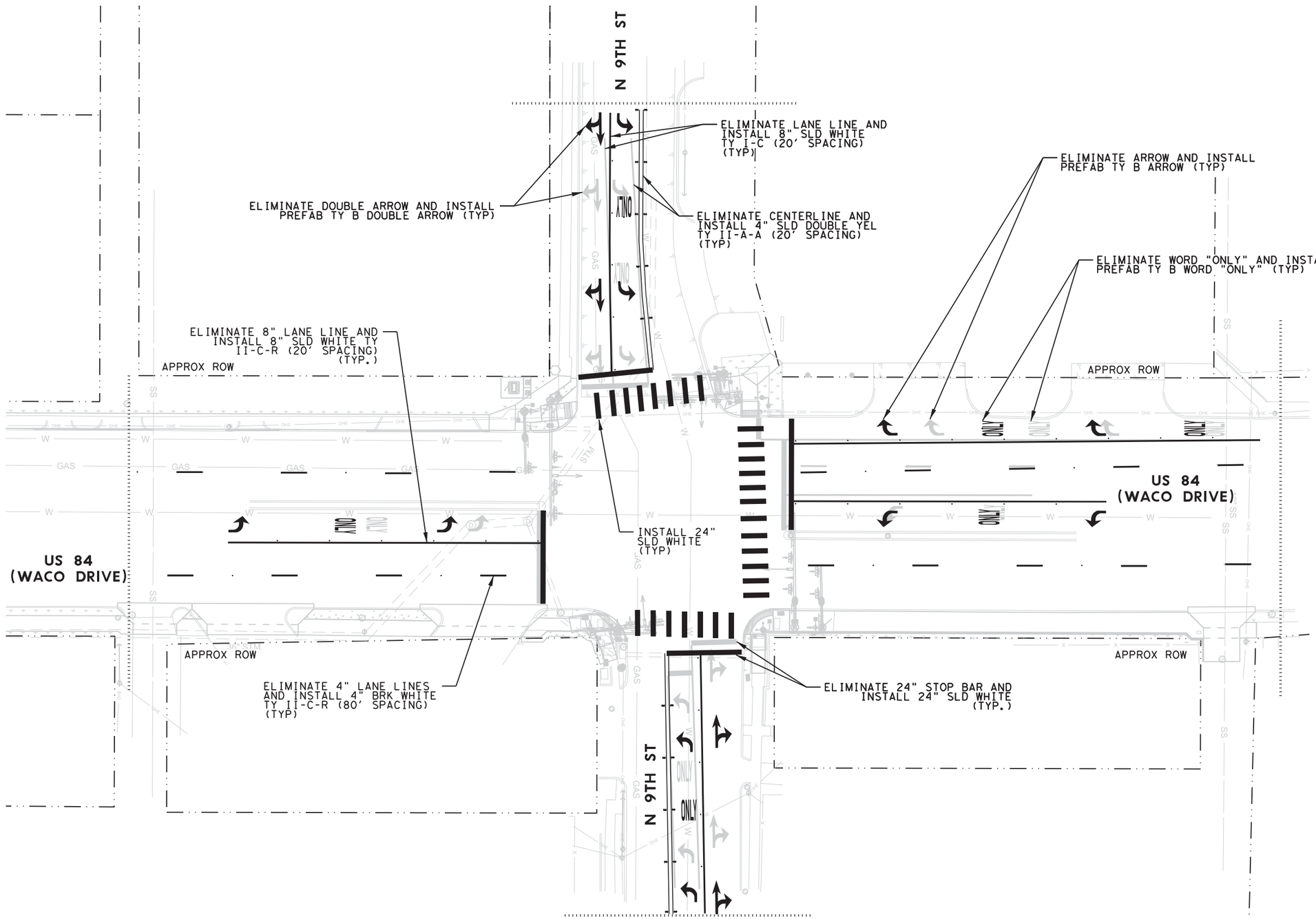

NOTES

1. INSTALLATION OF THE PROPOSED STOP BARS, PAVEMENT MARKING ARROWS, LANE LINE EXTENSIONS, AND LANE USE SIGNS (BOTH GROUND AND SIGNAL MOUNTED) MUST BE COORDINATED WITH THE SIGNAL TURN ON.
2. SEE PROPOSED TRAFFIC SIGNAL SHEETS FOR TY A SIGNS MOUNTED ON THE SIGNAL EQUIPMENT.
3. CONFIRM WITH THE ENGINEER PRIOR TO PLACEMENT OF THE LANE LINE EXTENSIONS.

STATE OF TEXAS
SCOTT R ARNOLD
96782
LICENSED
PROFESSIONAL ENGINEER

Scott R Arnold, P.E.

12/21/2020

Kimley»Horn
F-928

© 2021

Texas Department of Transportation

PROPOSED PVMT MARKINGS

AT N. 9TH STREET

SHEET 1 OF 2

FED.RD. DIV.NO.	PROJECT ID.	HIGHWAY NO.
6	(SEE TITLE SHEET)	US 84

STATE	DIST.	COUNTY	SHEET NO.
TEXAS	WAC	MCLENNAN	
CONT.	SECT.	JOB	377
0055	15	072	

FILENAME: pw:\\kh-pw.bentley.com:kh-pw-01\Documents\01 Active Projects\TX-FTW-063586010 - US 84 (Waco Drive)\WAC 005515072\4 - Design\Plan Set\8. Traffic\US84_SPM01_N9TH.dgn
PLOTTED: 12/21/2020

PROJECT	US 84 (0055-15-072)
SHEET	378

		666 6036	666 6048	666 6224	666 6226	666 6230	666 6300	666 6315	668 6019	668 6020	668 6027	672 6007	672 6009
		REFL PAV MRK TY I (W)8"(SLD)(100MIL)	REFL PAV MRK TY I (W)24"(SLD)(100MIL)	PAVEMENT SEALER 4"	PAVEMENT SEALER 8"	PAVEMENT SEALER 24"	RE PM W/RET REQ TY I (W)4"(BRK)(100MIL)	RE PM W/RET REQ TY I (Y)4"(SLD)(100MIL)	PREFAB PAV MRK TY B (W)(ARROW)	PREFAB PAV MRK TY B (W)(DBL ARROW)	PREFAB PAV MRK TY B (W)(WORD)	REFL PAV MRKR TY I-C	REFL PAV MRKR TY II-A-A
TRF ID	TABLE	LF	LF	LF	LF	LF	LF	LF	EA	EA	EA	EA	EA
PVMT MARKING	PVMT MARKING	620	415	580	620	415	180	400	10	4	6	10	20
SIGN	SIGN												
Grand Total		620	415	580	620	415	180	400	10	4	6	10	20

PROJECT	US 84 (0055-15-072)
SHEET	378

		672 6010	677 6001	677 6003	677 6007	677 6008	677 6009	677 6012
		REFL PAV MRKR TY II-C-R	ELIM EXT PAV MRK & MRKS (4")	ELIM EXT PAV MRK & MRKS (8")	ELIM EXT PAV MRK & MRKS (24")	ELIM EXT PAV MRK & MRKS (ARROW)	ELIM EXT PAV MRK & MRKS (DBL ARROW)	ELIM EXT PAV MRK & MRKS (WORD)
TRF ID	TABLE	EA	LF	LF	LF	EA	EA	EA
PVMT MARKING	PVMT MARKING	30	140	545	144	8	4	6
SIGN	SIGN							
Grand Total		30	140	545	144	8	4	6

Scott R. Arnold, P.E.

12/21/2020

Kimley»Horn F-928

© 2021

Texas Department of Transportation

PVMT MARKINGS SUMMARY

AT N. 9TH STREET

SHEET 2 OF 2

FED. RD. DIV. NO.	PROJECT ID.	HIGHWAY NO.
6	(SEE TITLE SHEET)	US 84

STATE	DIST.	COUNTY	SHEET NO.
TEXAS	WAC	MCLENNAN	378
CONT.	SECT.	JOB	
0055	15	072	

FILENAME: pw:\\kh-pw.bentley.com:kh-pw-01\Documents\01 Active Projects\TX-FTW-063586010 - US 84 (Waco Drive)\WAC 005515072\4 - Design\Plan Set\8. Traffic\US84_SPMSUM01_N9TH.dgn
PLOTTED: 12/21/2020

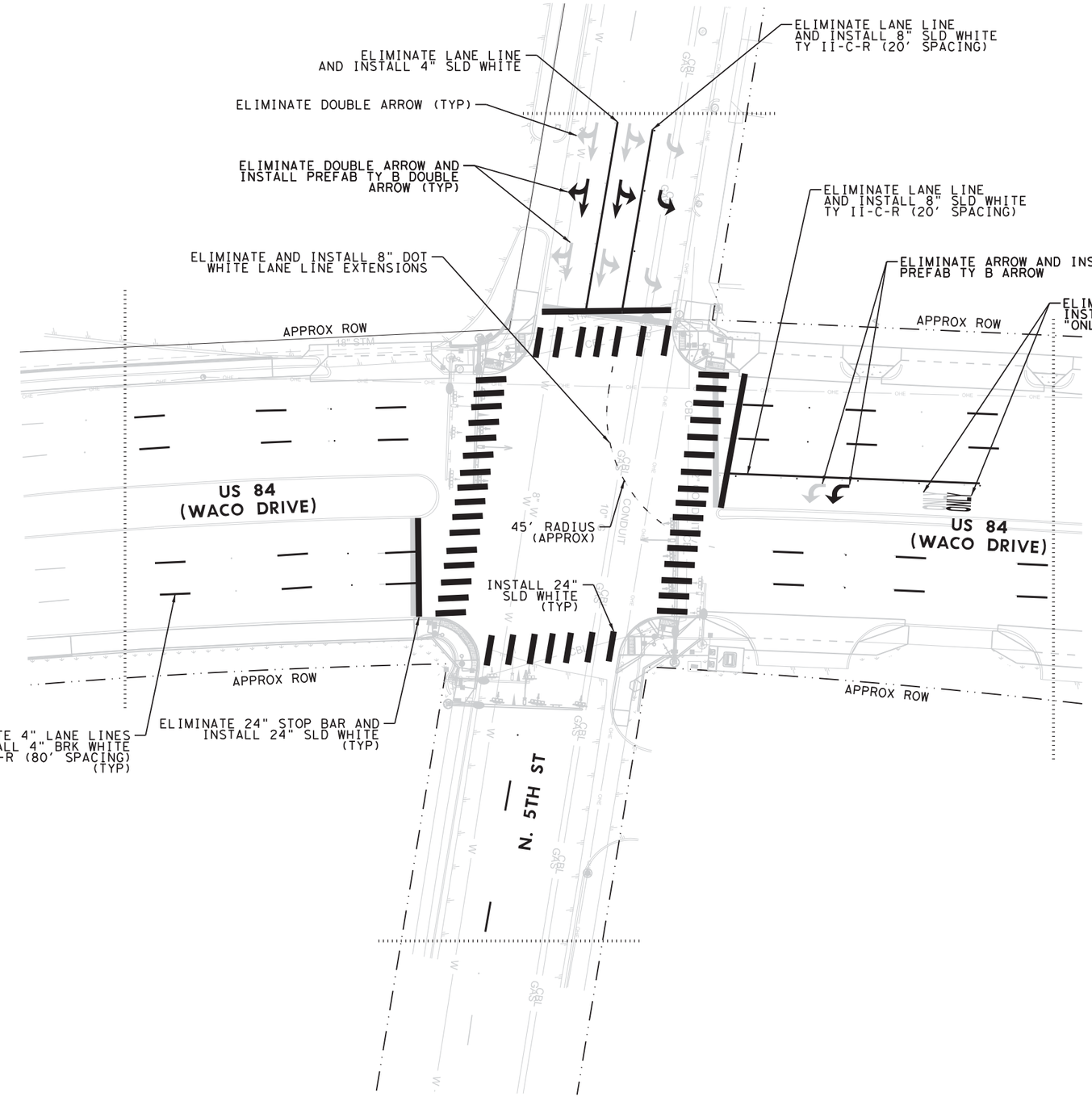

0' 20' 40'

LEGEND

..... LIMIT OF PAVEMENT MARKINGS

NOTES

1. INSTALLATION OF THE PROPOSED STOP BARS, PAVEMENT MARKING ARROWS, LANE LINE EXTENSIONS, AND LANE USE SIGNS (BOTH GROUND AND SIGNAL MOUNTED) MUST BE COORDINATED WITH THE SIGNAL TURN ON.
2. SEE PROPOSED TRAFFIC SIGNAL SHEETS FOR TY A SIGNS MOUNTED ON THE SIGNAL EQUIPMENT.
3. CONFIRM WITH THE ENGINEER PRIOR TO PLACEMENT OF THE LANE LINE EXTENSIONS.

STATE OF TEXAS SCOTT R. ANWAY 96782 LICENSED PROFESSIONAL ENGINEER

Scott R. Anway, P.E.

12/21/2020

Kimley»Horn F-928

© 2021

Texas Department of Transportation

PROPOSED PVMT MARKINGS

AT N. 5TH STREET

SHEET 1 OF 2

FED.RD. DIV.NO.	PROJECT ID.		HIGHWAY NO.
6	(SEE TITLE SHEET)		US 84
STATE	DIST.	COUNTY	SHEET NO.
TEXAS	WAC	MCLENNAN	379
CONT.	SECT.	JOB	
0055	15	072	

FILENAME: pw:\\kh-pw.bentley.com:kh-pw-01\Documents\01 Active Projects\TX-FTW-063586010 - US 84 (Waco Drive)\WAC 0055150721\4 - Design\Plan Set\8. Traffic\US84_SPM01_NSTH.dgn
PLOTTED: 12/21/2020

PROJECT	US 84 (0055-15-072)
SHEET	380

		666 6030	666 6036	666 6048	666 6224	666 6226	666 6230	666 6300	666 6303	668 6019	668 6020	668 6027	672 6010
		REFL PAV MRK TY I (W)8"(DOT)(100MIL)	REFL PAV MRK TY I (W)8"(SLD)(100MIL)	REFL PAV MRK TY I (W)24"(SLD)(100MIL)	PAVEMENT SEALER 4"	PAVEMENT SEALER 8"	PAVEMENT SEALER 24"	RE PM W/RET REQ TY I (W)4"(BRK)(100MIL)	RE PM W/RET REQ TY I (W)4"(SLD)(100MIL)	PREFAB PAV MRK TY B (W)(ARROW)	PREFAB PAV MRK TY B (W)(DBL ARROW)	PREFAB PAV MRK TY B (W)(WORD)	REFL PAV MRKR TY II-C-R
TRF ID	TABLE	LF	LF	LF	LF	LF	LF	LF	LF	EA	EA	EA	EA
PVMT MARKING	PVMT MARKING	20	145	580	325	165	580	260	65	2	2	1	17
SIGN	SIGN												
Grand Total		20	145	580	325	165	580	260	65	2	2	1	17

PROJECT	US 84 (0055-15-072)
SHEET	380

		677 6001	677 6003	677 6007	677 6008	677 6009	677 6012
		ELIM EXT PAV MRK & MRKS (4")	ELIM EXT PAV MRK & MRKS (8")	ELIM EXT PAV MRK & MRKS (24")	ELIM EXT PAV MRK & MRKS (ARROW)	ELIM EXT PAV MRK & MRKS (DBL ARROW)	ELIM EXT PAV MRK & MRKS (WORD)
TRF ID	TABLE	LF	LF	LF	EA	EA	EA
PVMT MARKING	PVMT MARKING	325	165	120	3	4	1
SIGN	SIGN						
Grand Total		325	165	120	3	4	1

Scott R. Arnold, P.E.

12/21/2020

Kimley»Horn F-928

© 2021

Texas Department of Transportation

PVMT MARKINGS SUMMARY

AT N. 5TH STREET

SHEET 2 OF 2

FED.RD. DIV.NO.	PROJECT ID.	HIGHWAY NO.
6	(SEE TITLE SHEET)	US 84

STATE	DIST.	COUNTY	SHEET NO.
TEXAS	WAC	MCLENNAN	380
CONT.	SECT.	JOB	
0055	15	072	

FILENAME: pw:\\kh-pw.bentley.com:kh-pw-01\Documents\01 Active Projects\TX-FTW-063586010 - US 84 (Waco Drive)\WAC 005515072\4 - Design\Plan Set\8. Traffic\US84_SPMSUM01_N5TH.dgn
PLOTTED: 12/21/2020

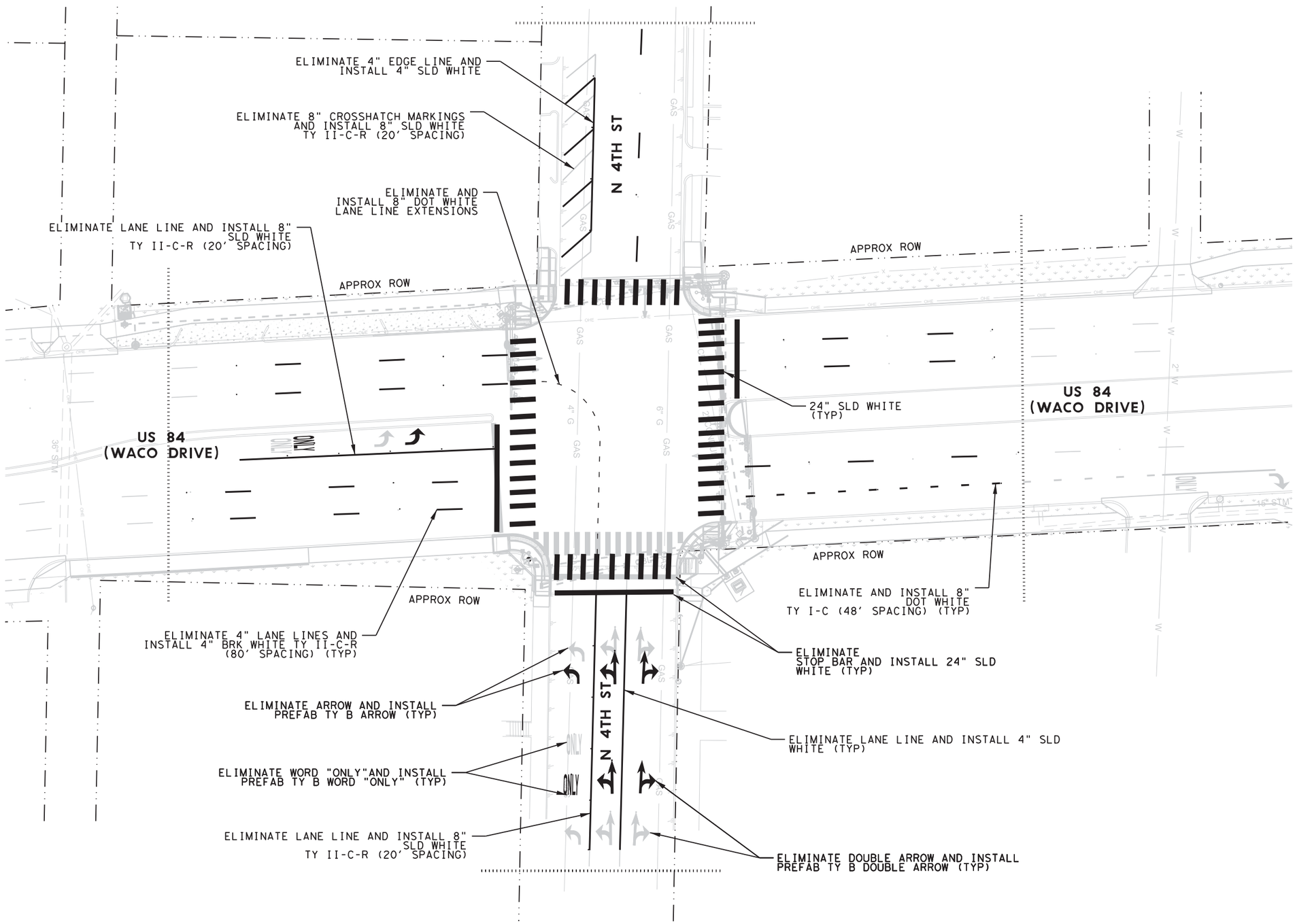

N

0' 20' 40'

LEGEND

..... LIMIT OF PAVEMENT MARKINGS

NOTES:

1. INSTALLATION OF THE PROPOSED STOP BARS, PAVEMENT MARKING ARROWS, LANE LINE EXTENSIONS, AND LANE USE SIGNS (BOTH GROUND AND SIGNAL MOUNTED) MUST BE COORDINATED WITH THE SIGNAL TURN ON.
2. SEE PROPOSED TRAFFIC SIGNAL SHEETS FOR TY A SIGNS MOUNTED ON THE SIGNAL EQUIPMENT.
3. CONFIRM WITH THE ENGINEER PRIOR TO PLACEMENT OF THE LANE LINE EXTENSIONS.

STATE OF TEXAS — SCOTT R. ARNOLD — 96782 — LICENSED PROFESSIONAL ENGINEER

Scott R. Arnold, P.E.

12/21/2020

Kimley»Horn F-928

© 2021

Texas Department of Transportation

PROPOSED PVMT MARKINGS

AT N. 4TH STREET

SHEET 1 OF 2

FED.RD. DIV.NO.	PROJECT ID.	HIGHWAY NO.
6	(SEE TITLE SHEET)	US 84

STATE	DIST.	COUNTY	SHEET NO.
TEXAS	WAC	MCLENNAN	381
CONT.	SECT.	JOB	
0055	15	072	

FILENAME: pw:\\kh-pw.bentley.com:kh-pw-01\Documents\01 Active Projects\TX-FTW-063586010 - US 84 (Waco Drive)\WAC 0055150721\4 - Design\Plan Set\8. Traffic\US84_SPM01_N4TH.dgn
PLOTTED: 12/21/2020

PROJECT	US 84 (0055-15-072)											
SHEET	382											
		663 6030	666 6036	666 6048	666 6224	666 6226	666 6230	666 6300	666 6303	668 6019	668 6020	668 6027	672 6007
		REFL PAV MRK TY I (W)8"(DOT)(100MIL)	REFL PAV MRK TY I (W)8"(SLD)(100MIL)	REFL PAV MRK TY I (W)24"(SLD)(100MIL)	PAVEMENT SEALER 4"	PAVEMENT SEALER 8"	PAVEMENT SEALER 24"	RE PM W/RET REQ TY I (W)4"(BRK)(100MIL)	RE PM W/RET REQ TY I (W)4"(SLD)(100MIL)	PREFAB PAV MRK TY B (W)(ARROW)	PREFAB PAV MRK TY B (W)(DBL ARROW)	PREFAB PAV MRK TY B (W)(WORD)	REFL PAV MRKR TY I-C
TRF ID	TABLE	LF	LF	LF	LF	LF	LF	LF	LF	EA	EA	EA	EA
PVMT MARKING	PVMT MARKING	46	265	580	380	311	580	220	160	2	4	2	3
SIGN	SIGN												
Grand Total		46	265	580	380	311	580	220	160	2	4	2	3

PROJECT	US 84 (0055-15-072)							
SHEET	382							
		672 6010	677 6001	677 6003	677 6007	677 6008	677 6009	677 6012
		REFL PAV MRKR TY II-C-R	ELIM EXT PAV MRK & MRKS (4")	ELIM EXT PAV MRK & MRKS (8")	ELIM EXT PAV MRK & MRKS (24")	ELIM EXT PAV MRK & MRKS (ARROW)	ELIM EXT PAV MRK & MRKS (DBL ARROW)	ELIM EXT PAV MRK & MRKS (WORD)
TRF ID	TABLE	EA	LF	LF	LF	EA	EA	EA
PVMT MARKING	PVMT MARKING	30	380	311	265	3	4	2
SIGN	SIGN							
Grand Total		30	380	311	265	3	4	2

Scott R. Arnold, P.E.

12/21/2020

Kimley»Horn F-928

© 2021

Texas Department of Transportation

PVMT MARKINGS SUMMARY

AT N. 4TH STREET

SHEET 2 OF 2

FED.RD. DIV.NO.	PROJECT ID.	HIGHWAY NO.
6	(SEE TITLE SHEET)	US 84

STATE	DIST.	COUNTY	SHEET NO.
TEXAS	WAC	MCLENNAN	382
CONT.	SECT.	JOB	
0055	15	072	

FILENAME: pw:\\kh-pw.bentley.com:kh-pw-01\Documents\01 Active Projects\TX-FTW-063586010 - US 84 (Waco Drive)\WAC 005515072\4 - Design\Plan Set\8. Traffic\US84_SPMSUM01_N4TH.dgn
PLOTTED: 12/21/2020

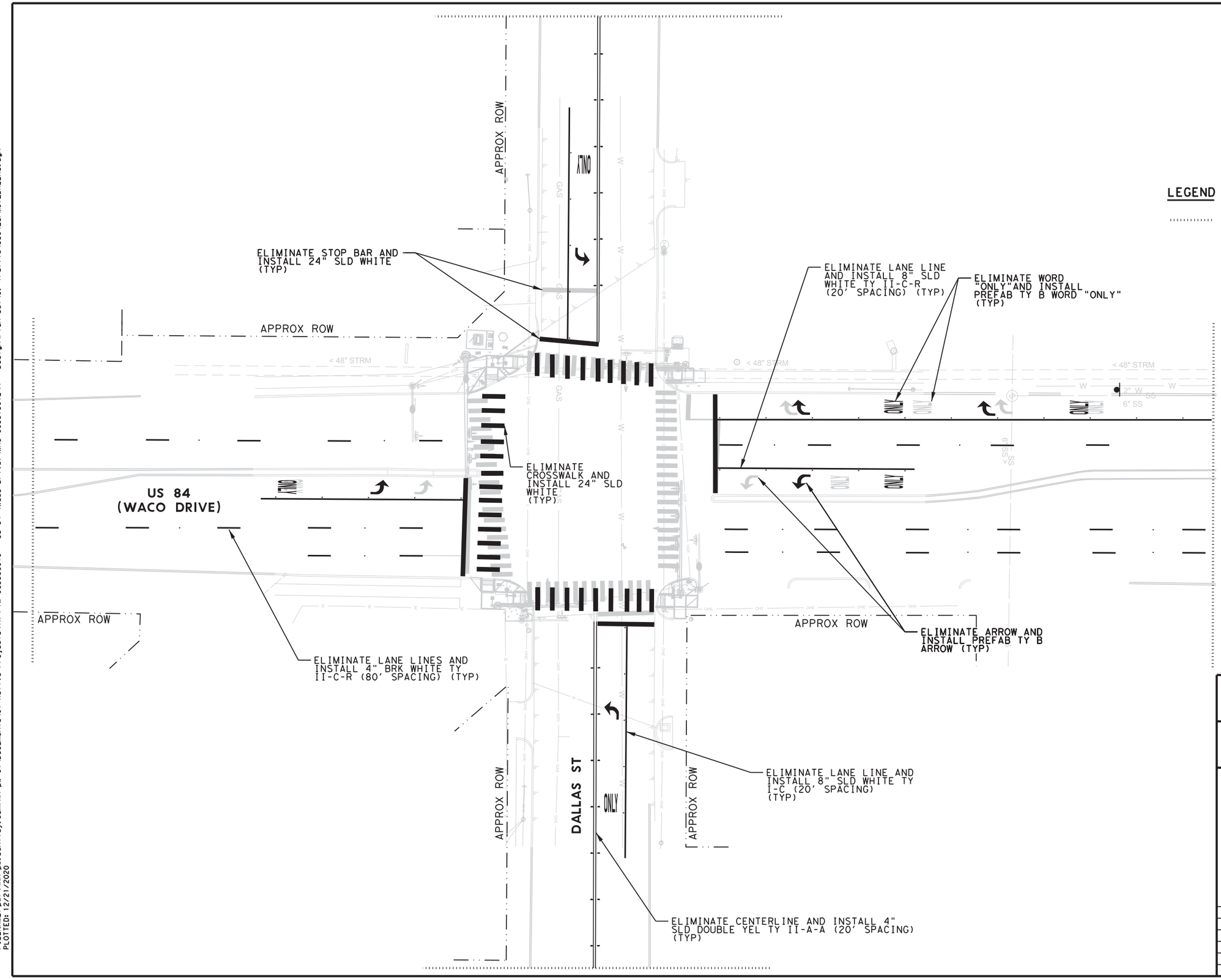

LEGEND

LIMIT OF PAVEMENT MARKINGS

NOTES:

1. INSTALLATION OF THE PROPOSED STOP BARS, PAVEMENT MARKING ARROWS, LANE LINE EXTENSIONS, AND LANE USE SIGNS (BOTH GROUND AND SIGNAL MOUNTED) MUST BE COORDINATED WITH THE SIGNAL TURN ON.
2. SEE PROPOSED TRAFFIC SIGNAL SHEETS FOR TY A SIGNS MOUNTED ON THE SIGNAL EQUIPMENT.
3. CONFIRM WITH THE ENGINEER PRIOR TO PLACEMENT OF THE LANE LINE EXTENSIONS.

STATE OF TEXAS
SCOTT K. ARNOLD
96782
LICENSED
PROFESSIONAL ENGINEER

Scott K. Arnold, P.E.
12/21/2020

Kimley»Horn F-928

© 2021

Texas Department of Transportation

PROPOSED PVMT MARKINGS

AT DALLAS STREET

SHEET 1 OF 2

FED.RD. DIV.NO.	PROJECT ID.	HIGHWAY NO.
6	(SEE TITLE SHEET)	US 84

STATE	DIST.	COUNTY	SHEET NO.
TEXAS	WAC	MCLENNAN	
CONT.	SECT.	JOB	383
0055	15	072	

FILENAME: pw:\\kh-pw.bentley.com:kh-pw-01\Documents\01 Active Projects\TX-FTW-063586010 - US 84 (Waco Drive)\WAC 005515072\4 - Design\Plan Set\8. Traffic\US84_SPM01_DALLAS.dgn
PLOTTED: 12/21/2020

PROJECT	US 84 (0055-15-072)											
SHEET	384											
		666 6036	666 6048	666 6224	666 6226	666 6230	666 6300	666 6315	668 6019	668 6027	672 6007	672 6009	672 6010
		REFL PAV MRK TY I (W)8"(SLD)(100MIL)	REFL PAV MRK TY I (W)24"(SLD)(100MIL)	PAVEMENT SEALER 4"	PAVEMENT SEALER 8"	PAVEMENT SEALER 24"	RE PM W/RET REQ TY I (W)4"(BRK)(100MIL)	RE PM W/RET REQ TY I (Y)4"(SLD)(100MIL)	PREFAB PAV MRK TY B (W)(ARROW)	PREFAB PAV MRK TY B (W)(WORD)	REFL PAV MRKR TY I-C	REFL PAV MRKR TY II-A-A	REFL PAV MRKR TY II-C-R
TRF ID	TABLE	LF	LF	LF	LF	LF	LF	LF	EA	EA	EA	EA	EA
PVMT MARKING	PVMT MARKING	590	450	870	590	450	290	580	6	6	10	26	35
SIGN	SIGN												
Grand Total		590	450	870	590	450	290	580	6	6	10	26	35

PROJECT	US 84 (0055-15-072)					
SHEET	384					
		677 6001	677 6003	677 6007	677 6008	677 6012
		ELIM EXT PAV MRK & MRKS (4")	ELIM EXT PAV MRK & MRKS (8")	ELIM EXT PAV MRK & MRKS (24")	ELIM EXT PAV MRK & MRKS (ARROW)	ELIM EXT PAV MRK & MRKS (WORD)
TRF ID	TABLE	LF	LF	LF	EA	EA
PVMT MARKING	PVMT MARKING	1040	600	615	4	4
SIGN	SIGN					
Grand Total		1040	600	615	4	4

STATE OF TEXAS
SCOTT R. ARNOLD
96782
LICENSED PROFESSIONAL ENGINEER

Scott R. Arnold, P.E.

12/21/2020

Kimley»Horn F-928

© 2021

Texas Department of Transportation

PVMT MARKINGS SUMMARY

AT DALLAS STREET

SHEET 2 OF 2

FED.RD. DIV.NO.	PROJECT ID.	HIGHWAY NO.
6	(SEE TITLE SHEET)	US 84

STATE	DIST.	COUNTY	SHEET NO.
TEXAS	WAC	MCLENNAN	384
CONT.	SECT.	JOB	
0055	15	072	

FILENAME: pw:\\kh-pw.bentley.com:kh-pw-01\Documents\01 Active Projects\TX-FTW-063586010 - US 84 (Waco Drive)\WAC 005515072\4 - Design\Plan Set\8. Traffic\US84_SPMSUM01_DALLAS.dgn
PLOTTED: 12/21/2020

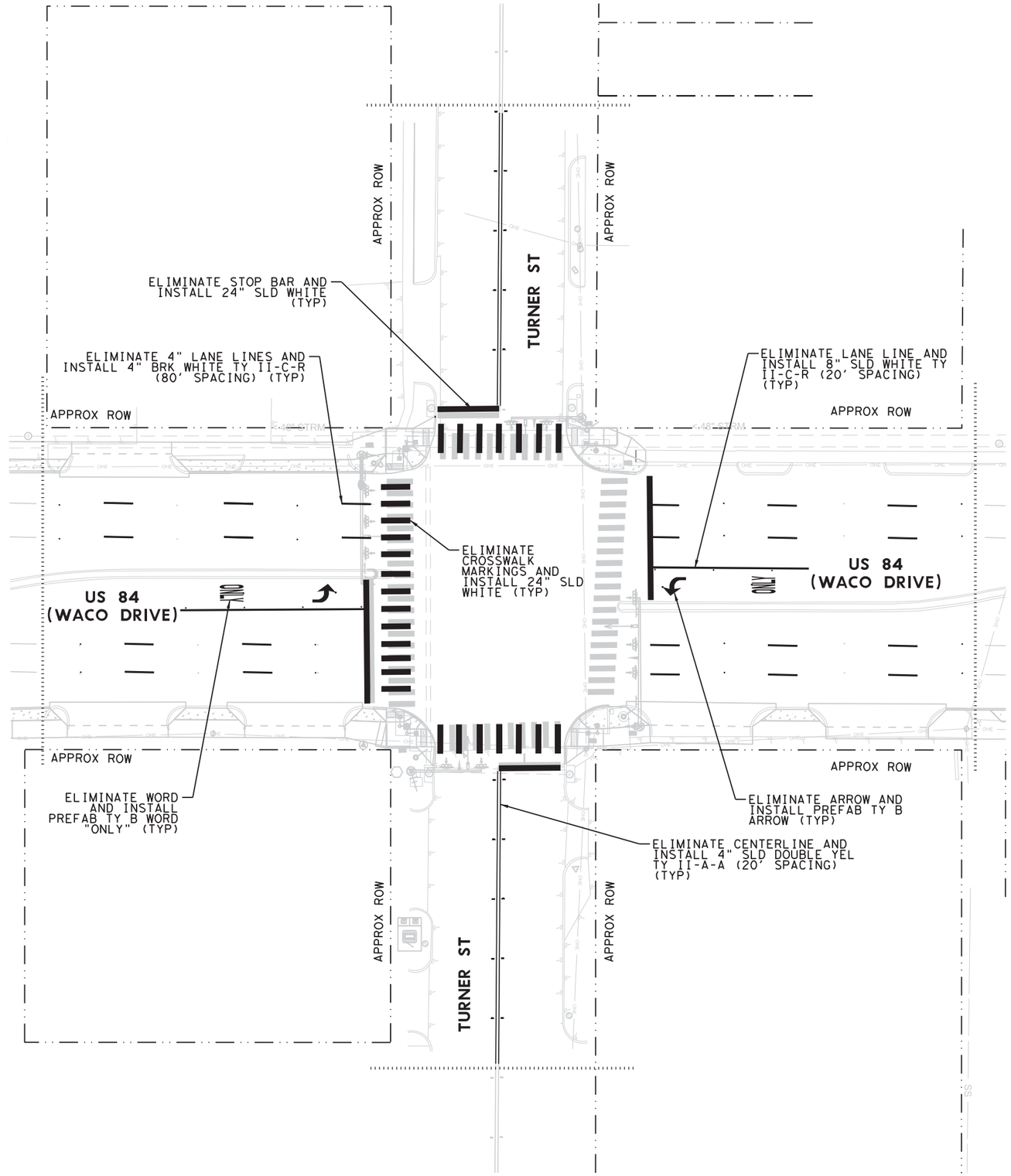

N

0' 20' 40'

LEGEND

LIMIT OF PAVEMENT MARKINGS

NOTES

1. INSTALLATION OF THE PROPOSED STOP BARS, PAVEMENT MARKING ARROWS, LANE LINE EXTENSIONS, AND LANE USE SIGNS (BOTH GROUND AND SIGNAL MOUNTED) MUST BE COORDINATED WITH THE SIGNAL TURN ON.
2. SEE PROPOSED TRAFFIC SIGNAL SHEETS FOR TY A SIGNS MOUNTED ON THE SIGNAL EQUIPMENT.
3. CONFIRM WITH THE ENGINEER PRIOR TO PLACEMENT OF THE LANE LINE EXTENSIONS.

STATE OF TEXAS — SCOTT R. ARNOLD — 96782 — LICENSED PROFESSIONAL ENGINEER

Scott R. Arnold, P.E.

12/21/2020

Kimley»Horn F-928

© 2021

Texas Department of Transportation

PROPOSED PVMT MARKINGS

AT TURNER STREET

SHEET 1 OF 2

FED.RD. DIV.NO.	PROJECT ID.	HIGHWAY NO.
6	(SEE TITLE SHEET)	US 84

STATE	DIST.	COUNTY	SHEET NO.
TEXAS	WAC	MCLENNAN	385
CONT.	SECT.	JOB	
0055	15	072	

FILENAME: pw:\\kh-pw.bentley.com:kh-pw-01\Documents\01 Active Projects\TX-FTW-063586010 - US 84 (Waco Drive)\WAC 0055150724 - Design\Plan Set\8. Traffic\US84_SPM01_TURN.dgn
PLOTTED: 12/21/2020

PROJECT	US 84 (0055-15-072)											
SHEET	386											
		666 6036	666 6048	666 6224	666 6226	666 6230	666 6300	666 6315	668 6019	668 6027	672 6009	672 6010	677 6001
		REFL PAV MRK TY I (W)8"(SLD)(100MIL)	REFL PAV MRK TY I (W)24"(SLD)(100MIL)	PAVEMENT SEALER 4"	PAVEMENT SEALER 8"	PAVEMENT SEALER 24"	RE PM W/RET REQ TY I (W)4"(BRK)(100MIL)	RE PM W/RET REQ TY I (Y)4"(SLD)(100MIL)	PREFAB PAV MRK TY B (W)(ARROW)	PREFAB PAV MRK TY B (W)(WORD)	REFL PAV MRKR TY II-A-A	REFL PAV MRKR TY II-C-R	ELIM EXT PAV MRK & MRKS (4")
TRF ID	TABLE	LF	LF	LF	LF	LF	LF	LF	EA	EA	EA	EA	EA
PVMT MARKING	PVMT MARKING	115	400	620	115	400	220	400	2	2	20	23	640
SIGN	SIGN												
Grand Total		115	400	620	115	400	220	400	2	2	20	23	640

PROJECT	US 84 (0055-15-072)				
SHEET	386				
		677 6003	677 6007	677 6008	677 6012
		ELIM EXT PAV MRK & MRKS (8")	ELIM EXT PAV MRK & MRKS (24")	ELIM EXT PAV MRK & MRKS (ARROW)	ELIM EXT PAV MRK & MRKS (WORD)
TRF ID	TABLE	EA	LF	EA	EA
PVMT MARKING	PVMT MARKING	115	550	2	2
SIGN	SIGN				
Grand Total		115	550	2	2

FILENAME: pw:\\kh-pw.bentley.com:kh-pw-01\Documents\01 Active Projects\TX-FTW-063586010 - US 84 (Waco Drive)\WAC 005515072\4 - Design\Plan Set\8. Traffic\US84_SPMSUM01_TURN.dgn
PLOTTED: 12/21/2020

STATE OF TEXAS
SCOTT R. ARNOLD
96782
LICENSED PROFESSIONAL ENGINEER

Scott R. Arnold, P.E.
12/21/2020

Kimley»Horn F-928

© 2021

Texas Department of Transportation

PVMT MARKINGS SUMMARY

AT TURNER STREET

SHEET 2 OF 2

FED.RD. DIV.NO.	PROJECT ID.	HIGHWAY NO.
6	(SEE TITLE SHEET)	US 84

STATE	DIST.	COUNTY	SHEET NO.
TEXAS	WAC	MCLENNAN	386
CONT.	SECT.	JOB	
0055	15	072	

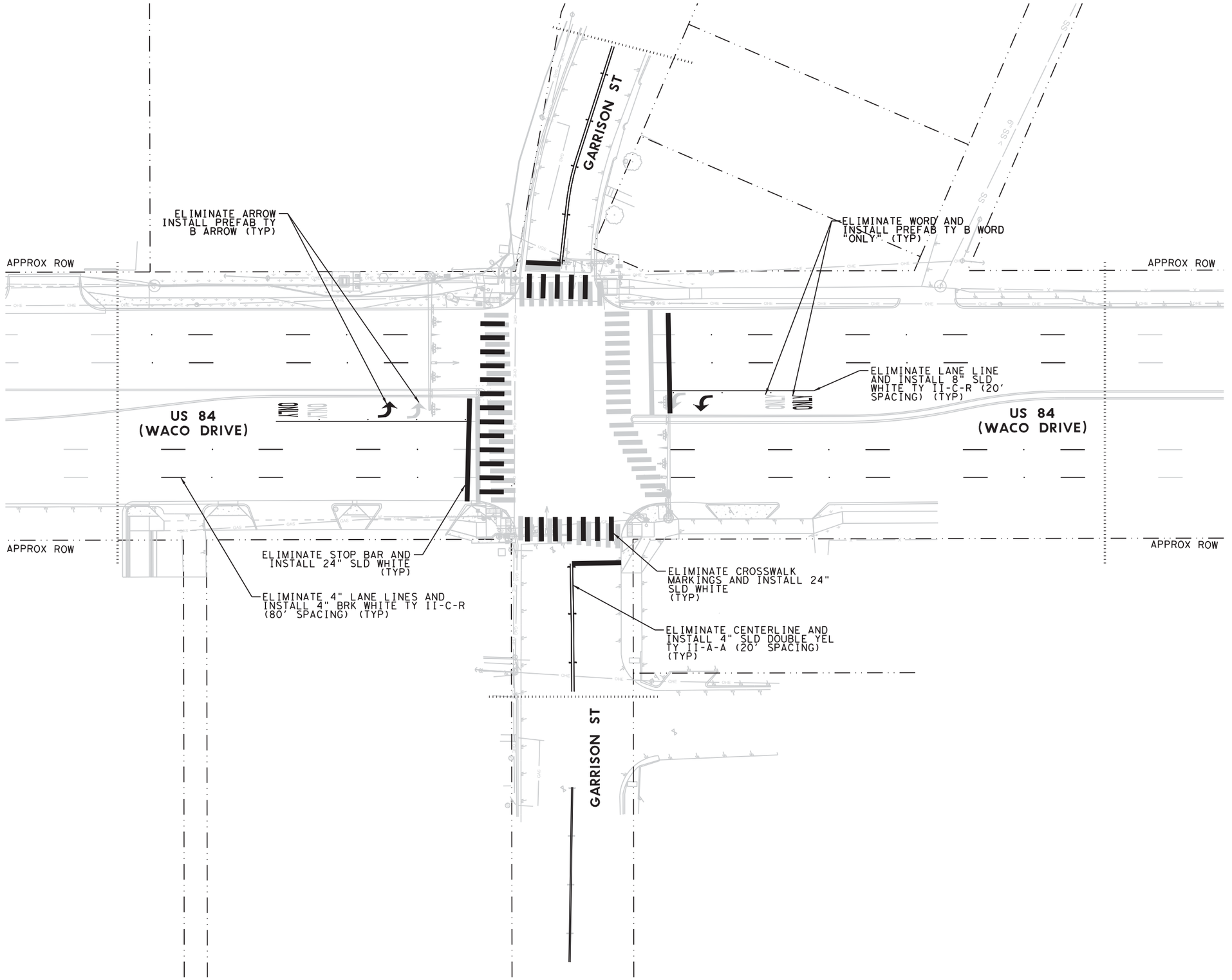

LEGEND

LIMIT OF PAVEMENT MARKINGS

NOTES

1. INSTALLATION OF THE PROPOSED STOP BARS, PAVEMENT MARKING ARROWS, LANE LINE EXTENSIONS, AND LANE USE SIGNS (BOTH GROUND AND SIGNAL MOUNTED) MUST BE COORDINATED WITH THE SIGNAL TURN ON.
2. SEE PROPOSED TRAFFIC SIGNAL SHEETS FOR TY A SIGNS MOUNTED ON THE SIGNAL EQUIPMENT.
3. CONFIRM WITH THE ENGINEER PRIOR TO PLACEMENT OF THE LANE LINE EXTENSIONS.

STATE OF TEXAS — SCOTT R. ARNOLD — 96782 — LICENSED PROFESSIONAL ENGINEER

Scott R. Arnold, P.E.

12/21/2020

Kimley»Horn F-928

© 2021

Texas Department of Transportation

PROPOSED PVMT MARKINGS

AT GARRISON STREET

SHEET 1 OF 2

FED.RD. DIV.NO.	PROJECT ID.	HIGHWAY NO.
6	(SEE TITLE SHEET)	US 84

STATE	DIST.	COUNTY	SHEET NO.
TEXAS	WAC	MCLENNAN	387
CONT.	SECT.	JOB	
0055	15	072	

FILENAME: pw:\\kh-pw.bentley.com:kh-pw-01\Documents\01 Active Projects\TX-FTW-063586010 - US 84 (Waco Drive)\WAC 0055150724 - Design\Plan Set\8. Traffic\US84_SPM01_GAR.dgn
PLOTTED: 12/21/2020

PROJECT	US 84 (0055-15-072)
SHEET	388

		666 6036	666 6048	666 6224	666 6226	666 6230	666 6300	666 6315	668 6019	668 6027	672 6009	672 6010	677 6001
		REFL PAV MRK TY I (W)8"(SLD)(100MIL)	REFL PAV MRK TY I (W)24"(SLD)(100MIL)	PAVEMENT SEALER 4"	PAVEMENT SEALER 8"	PAVEMENT SEALER 24"	RE PM W/RET REQ TY I (W)4"(BRK)(100MIL)	RE PM W/RET REQ TY I (Y)4"(SLD)(100MIL)	PREFAB PAV MRK TY B (W)(ARROW)	PREFAB PAV MRK TY B (W)(WORD)	REFL PAV MRKR TY II-A-A	REFL PAV MRKR TY II-C-R	ELIM EXT PAV MRK & MRKS (4")
TRF ID	TABLE	LF	LF	LF	LF	LF	LF	LF	EA	EA	EA	EA	LF
PVMT MARKING	PVMT MARKING	140	370	605	140	370	300	305	2	2	16	23	665
SIGN	SIGN												
Grand Total		140	370	605	140	370	300	305	2	2	16	23	665

PROJECT	US 84 (0055-15-072)
SHEET	388

		677 6003	677 6007	677 6008	677 6012
		ELIM EXT PAV MRK & MRKS (8")	ELIM EXT PAV MRK & MRKS (24")	ELIM EXT PAV MRK & MRKS (ARROW)	ELIM EXT PAV MRK & MRKS (WORD)
TRF ID	TABLE	LF	LF	EA	EA
PVMT MARKING	PVMT MARKING	140	500	2	2
SIGN	SIGN				
Grand Total		140	500	2	2

FILENAME: pw:\\kh-pw.bentley.com:kh-pw-01\Documents\01 Active Projects\TX-FTW-063586010 - US 84 (Waco Drive)\WAC 005515072\4 - Design\Plan Set\8. Traffic\US84_SPMSUM01_GAR.dgn
PLOTTED: 12/21/2020

Scott R. Arnold, P.E.

12/21/2020

Kimley»Horn F-928

© 2021

Texas Department of Transportation

PVMT MARKINGS AND SIGNS SUMMARY

AT GARRISON STREET

SHEET 2 OF 2

FED.RD. DIV.NO.	PROJECT ID.	HIGHWAY NO.
6	(SEE TITLE SHEET)	US 84

STATE	DIST.	COUNTY	SHEET NO.
TEXAS	WAC	MCLENNAN	388
CONT.	SECT.	JOB	
0055	15	072	

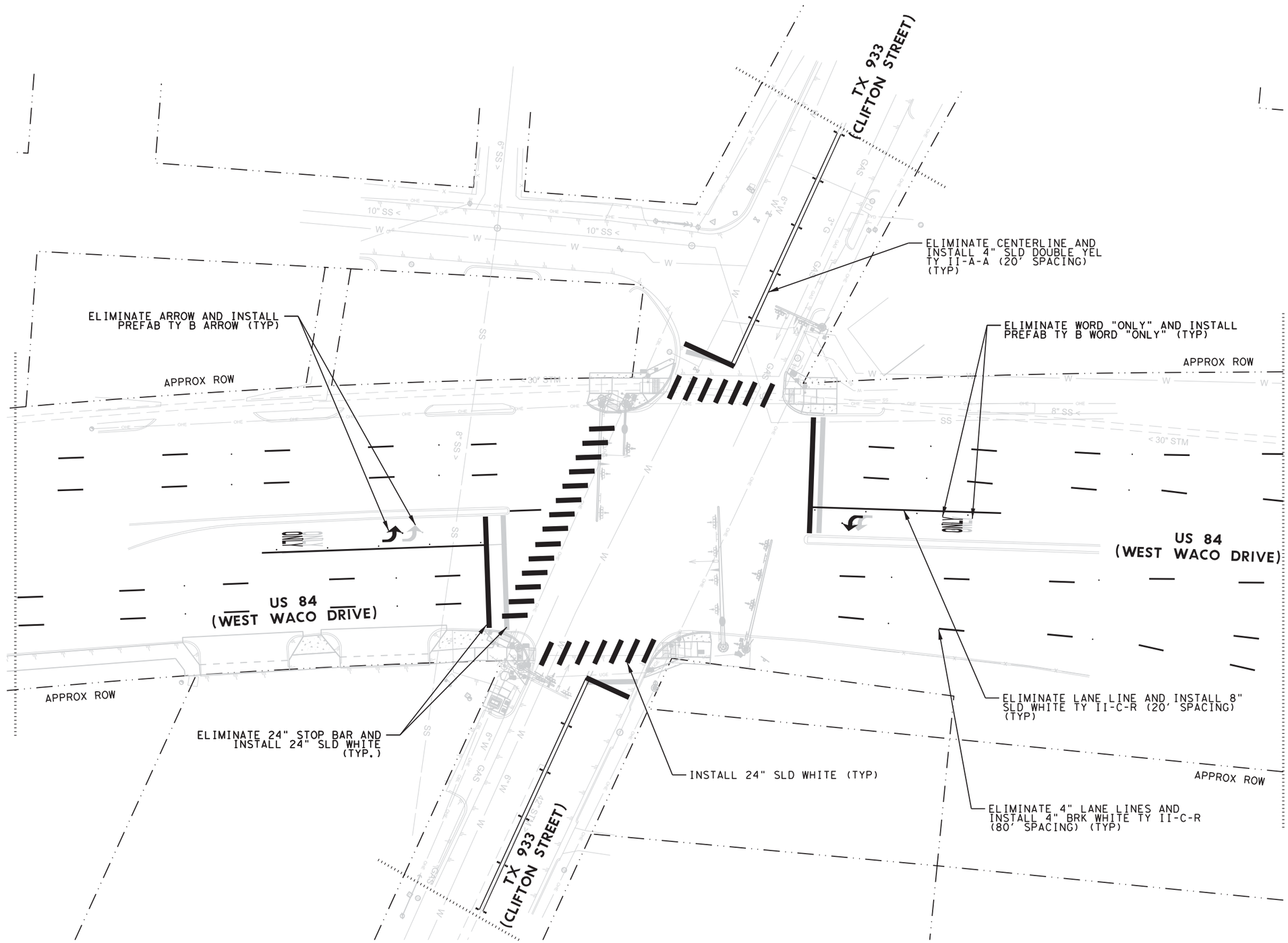

0' 20' 40'

LEGEND

LIMIT OF PAVEMENT MARKINGS

NOTES

1. INSTALLATION OF THE PROPOSED STOP BARS, PAVEMENT MARKING ARROWS, LANE LINE EXTENSIONS, AND LANE USE SIGNS (BOTH GROUND AND SIGNAL MOUNTED) MUST BE COORDINATED WITH THE SIGNAL TURN ON.
2. SEE PROPOSED TRAFFIC SIGNAL SHEETS FOR TY A SIGNS MOUNTED ON THE SIGNAL EQUIPMENT.
3. CONFIRM WITH THE ENGINEER PRIOR TO PLACEMENT OF THE LANE LINE EXTENSIONS.

STATE OF TEXAS
SCOTT R. ARNOLD
96785
LICENSED
PROFESSIONAL ENGINEER

Scott R. Arnold, P.E.
12/21/2020

Kimley»Horn F-928

© 2021

Texas Department of Transportation

PROPOSED PVMT MARKINGS

AT CLIFTON STREET

SHEET 1 OF 2

FED.RD. DIV.NO.	PROJECT ID.	HIGHWAY NO.
6	(SEE TITLE SHEET)	US 84

STATE	DIST.	COUNTY	SHEET NO.
TEXAS	WAC	MCLENNAN	389
CONT.	SECT.	JOB	
0055	15	072	

FILENAME: pw:\\kh-pw.bentley.com:kh-pw-01\Documents\01 Active Projects\TX-FTW-063586010 - US 84 (Waco Drive)\WAC 0055150721\4 - Design\Plan Set\8. Traffic\US84_SPM01_CLIF.dgn
PLOTTED: 12/21/2020

PROJECT	US 84 (0055-15-072)											
SHEET	390											
		666 6036	666 6048	666 6224	666 6226	666 6230	666 6300	666 6315	668 6019	668 6027	672 6009	672 6010	677 6001
		REFL PAV MRK TY I (W)8"(SLD)(100MIL)	REFL PAV MRK TY I (W)24"(SLD)(100MIL)	PAVEMENT SEALER 4"	PAVEMENT SEALER 8"	PAVEMENT SEALER 24"	RE PM W/RET REQ TY I (W)4"(BRK)(100MIL)	RE PM W/RET REQ TY I (Y)4"(SLD)(100MIL)	PREFAB PAV MRK TY B (W)(ARROW)	PREFAB PAV MRK TY B (W)(WORD)	REFL PAV MRKR TY II-A-A	REFL PAV MRKR TY II-C-R	ELIM EXT PAV MRK & MRKS (4")
TRF ID	TABLE	LF	LF	LF	LF	LF	LF	LF	EA	EA	EA	EA	LF
PVMT MARKING	PVMT MARKING	165	410	810	165	410	410	400	2	2	20	25	810
SIGN	SIGN												
Grand Total		165	410	810	165	410	410	400	2	2	20	25	810

PROJECT	US 84 (0055-15-072)				
SHEET	390				
		677 6003	677 6007	677 6008	677 6012
		ELIM EXT PAV MRK & MRKS (8")	ELIM EXT PAV MRK & MRKS (24")	ELIM EXT PAV MRK & MRKS (ARROW)	ELIM EXT PAV MRK & MRKS (WORD)
TRF ID	TABLE	LF	LF	EA	EA
PVMT MARKING	PVMT MARKING	165	135	2	2
SIGN	SIGN				
Grand Total		165	135	2	2

FILENAME: pw:\\kh-pw.bentley.com:kh-pw-01\Documents\01 Active Projects\TX-FTW-063586010 - US 84 (Waco Drive)\WAC 005515072\4 - Design\Plan Set\8. Traffic\US84_SPMSUM01_CLIF.dgn
PLOTTED: 12/21/2020

STATE OF TEXAS
SCOTT R. ARNOLD
96782
LICENSED PROFESSIONAL ENGINEER
Scott R. Arnold, P.E.

12/21/2020

Kimley»Horn
F-928

© 2021

Texas Department of Transportation

PVMT MARKINGS SUMMARY

AT CLIFTON STREET

SHEET 2 OF 2

FED.RD. DIV.NO.	PROJECT ID.	HIGHWAY NO.
6	(SEE TITLE SHEET)	US 84

STATE	DIST.	COUNTY	SHEET NO.
TEXAS	WAC	MCLENNAN	390
CONT.	SECT.	JOB	
0055	15	072	

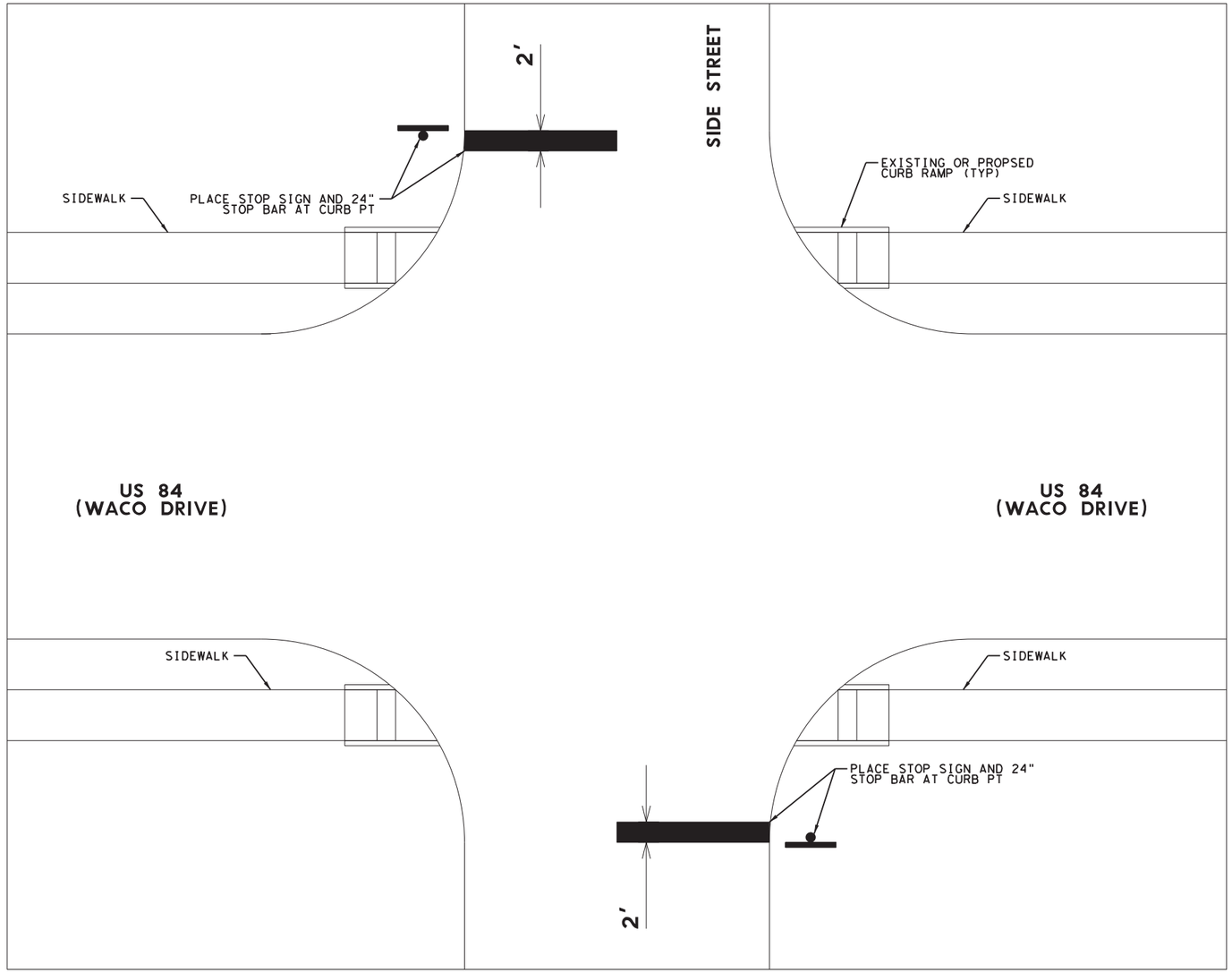

STREET	TOTAL ESTIMATED LF OF 24" WHITE PAVEMENT MARKING	NUMBER OF STOP SIGNS
FACTORY	18	1
VILLA	18	1
ESTHER	18	1
43RD	18	1
42ND	19	1
AUSTIN	19	1
41ST	14	1
40TH	14	1
39TH	14	2
37TH	16	1
35TH	13	1
34TH	13	1
33RD	14	1
ORIENTAL	17	1
32ND	14	1
CRESCENT	17	1
31ST	12	1
30TH	15	2
28TH	36	1
27TH	19	2
24TH	18	2
24TH	13	
23RD	18	2
23RD	18	
22ND	12	1
21ST	14	2
21ST	17	
BARNARD	9	1
20TH	20	2
20TH	18	
19TH	18	1
19TH	18	
16TH	20	2
16TH	20	
NOVELTY	10	1
14TH	22	1
13TH	22	2
10TH	17	2
8TH	21	1
6TH	18	2
3RD	18	2
HOOD	17	2
ROSE	14	2
HUBERT	16	1
TOTAL	**991**	**52**

APPROXIMATE N

Scott R Arnold, P.E.
12/21/2020

Kimley»Horn F-928

© 2021

Texas Department of Transportation

US 84 TRAFFIC SIGNAL AND SIDEWALK IMPROVEMENTS

PAVEMENT MARKING DETAIL SIDE STREETS

SHEET 1 OF 1

FED.RD. DIV.NO.	PROJECT ID.	HIGHWAY NO.
6	(SEE TITLE SHEET)	US 84

STATE	DIST.	COUNTY	SHEET NO.
TEXAS	WAC	MCLENNAN	391
CONT.	SECT.	JOB	
0055	15	072	

FILENAME: pw:\\kh-pw.bentley.com:kh-pw-01\Documents\01 Active Projects\TX-FTW-063586010 - US 84 (Waco Drive)\WAC 0055150721\4 - Design\Plan Set\3. Roadway\TxDOT Standards\US84_MDF_STRIPINGDETAIL.dgn
PLOTTED: 12/21/2020

63-1

I-3

48" X 24"
TY A
ALUM

(6 SQ FT)
EACH

I3/CONVENTIONAL:
3.0" Radius, 1.0" Border, White on, Green;
"BRAZOS", D; "RIVER", D;

FILENAME: pw:\\kh-pw.bentley.com:kh-pw-01\Documents\01 Active Projects\TX-FTW-063586010 - US 84 (Waco Drive)\WAC 0055150721\4 - Design\Plan Set\8. Traffic\US84_SIGN_DETAIL.dgn
PLOTTED: 12/21/2020

Scott R. Arnold, P.E.
03/01/2021

Kimley»Horn F-928

© 2021

Texas Department of Transportation

SIGN DETAILS SHEET

SHEET 1 OF 1

FED.RD. DIV.NO.	PROJECT ID.	HIGHWAY NO.
6	(SEE TITLE SHEET)	US 84

STATE	DIST.	COUNTY	SHEET NO.
TEXAS	WAC	MCLENNAN	391A
CONT.	SECT.	JOB	
0055	15	072	

DISCLAIMER:
The use of this standard is governed by the "Texas Engineering Practice Act". No warranty of any kind is made by TxDOT for any purpose whatsoever. TxDOT assumes no responsibility for the conversion of this standard to other formats or for incorrect results or damages resulting from its use.

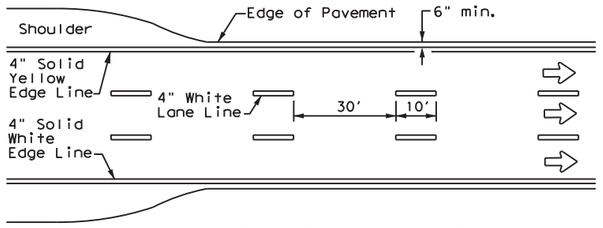

EDGE LINE AND LANE LINES ONE-WAY ROADWAY WITH OR WITHOUT SHOULDERS

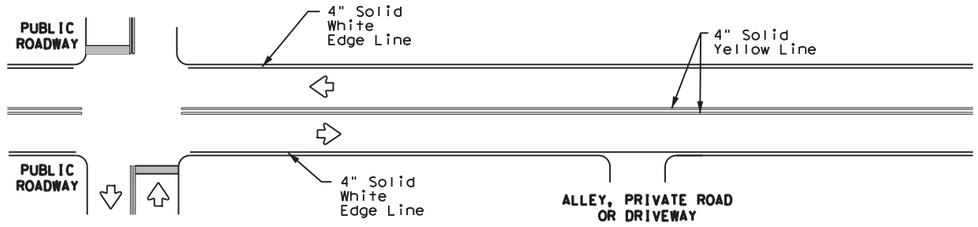

TYPICAL TWO-LANE, TWO-WAY PAVEMENT MARKINGS THROUGH INTERSECTIONS

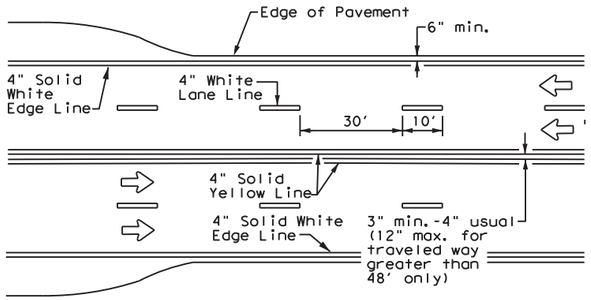

CENTERLINE AND LANE LINES FOUR LANE TWO-WAY ROADWAY WITH OR WITHOUT SHOULDERS

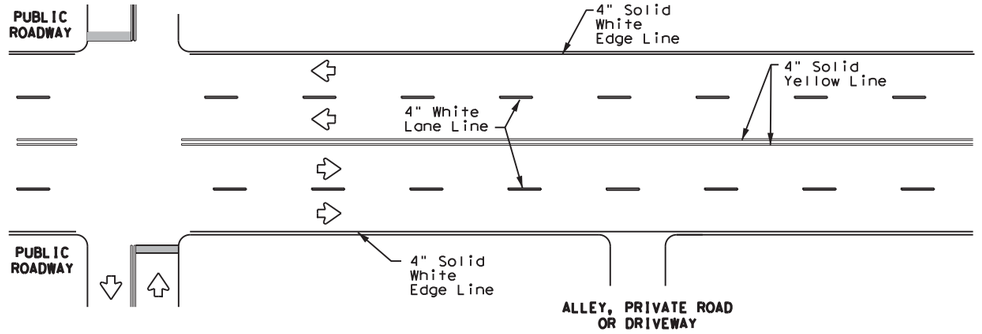

TYPICAL MULTI-LANE, TWO-WAY PAVEMENT MARKINGS THROUGH INTERSECTIONS

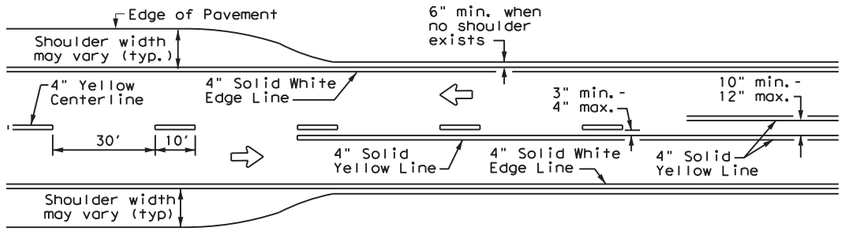

TWO LANE TWO-WAY ROADWAY WITH OR WITHOUT SHOULDERS

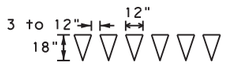

For posted speed on road being marked equal to or less than 40 MPH.

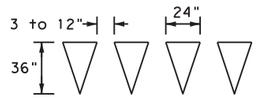

For posted speed on road being marked equal to or greater than 45 MPH.

YIELD LINES

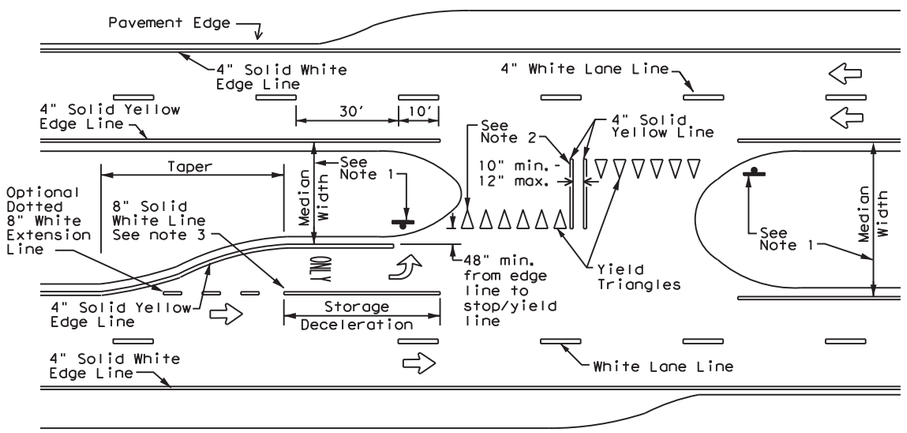

FOUR LANE DIVIDED ROADWAY CROSSOVERS

NOTES

1. Where divided highways are separated by median widths at the median opening itself of 30 feet or more, median openings shall be signed as two separate intersections. Each median opening has two width measurements, with one measurement for each approach. The narrow median width will be the controlling width to determine if signs are required. Yield signs are the typical intersection control. Stop signs are optional as determined by the Engineer.

2. Install median striping (double yellow centerlines and stop bars/yield triangles) when a 50' or greater median centerline can be placed. Stop bars shall only be used with stop signs. Yield traingles shall only be used with yield signs.

3. Length of turn bays, including taper, deceleration, and storage lengths shall be as shown on the plans or as directed by the Engineer.

GENERAL NOTES

1. Edgeline striping shall be as shown in the plans or as directed by the Engineer. The edgeline should not be placed less less than 6 inches from the edge of pavement. This distance may vary due to pavement raveling or other conditions. Edgelines are not required in curb and gutter sections of roadways.

2. The traveled way includes only that portion of the roadway used for vehicular travel. It does not include the parking lanes, sidewalks, berms and shoulders. The traveled ways shall be measured from the inside of edgeline to the inside of edgeline of a two lane roadway.

MATERIAL SPECIFICATIONS	
PAVEMENT MARKERS (REFLECTORIZED)	DMS-4200
EPOXY AND ADHESIVES	DMS-6100
BITUMINOUS ADHESIVE FOR PAVEMENT MARKERS	DMS-6130
TRAFFIC PAINT	DMS-8200
HOT APPLIED THERMOPLASTIC	DMS-8220
PERMANENT PREFABRICATED PAVEMENT MARKINGS	DMS-8240

All pavement marking materials shall meet the required Departmental Material Specifications as specified by the plans.

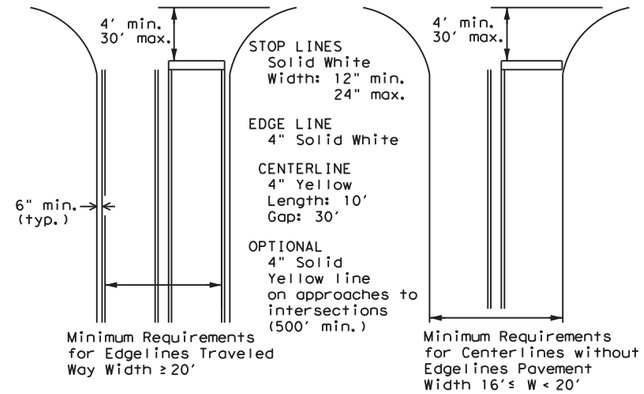

GUIDE FOR PLACEMENT OF STOP LINES, EDGE LINE & CENTERLINE

Based on Traveled Way and Pavement Widths for Undivided Highways

Texas Department of Transportation

Traffic Safety Division Standard

TYPICAL STANDARD PAVEMENT MARKINGS

PM(1)-20

FILE: pm1-20.dgn	DN:	CK:	DW:	CK:
© TxDOT November 1978	CONT	SECT	JOB	HIGHWAY
REVISIONS 8-95 3-03	005	515	072	US 84
5-00 2-12	DIST	COUNTY		SHEET NO.
8-00 6-20	WAC	MCLENNAN		392

22A

DATE:
FILE:

REFLECTIVE RAISED PAVEMENT MARKERS FOR VEHICLE POSITIONING GUIDANCE

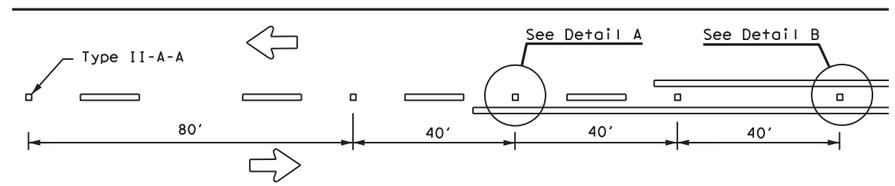

CENTERLINE FOR ALL TWO LANE ROADWAYS

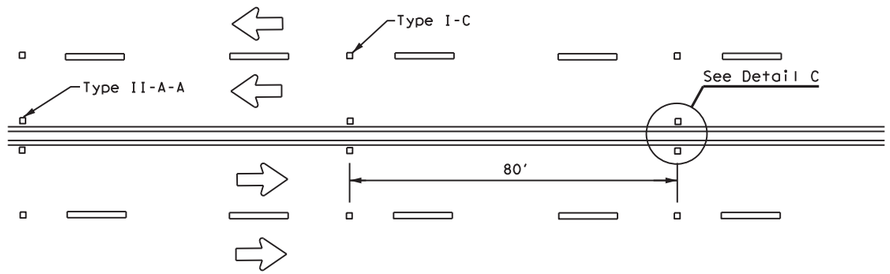

CENTERLINE & LANE LINES FOR FOUR LANE TWO-WAY HIGHWAYS

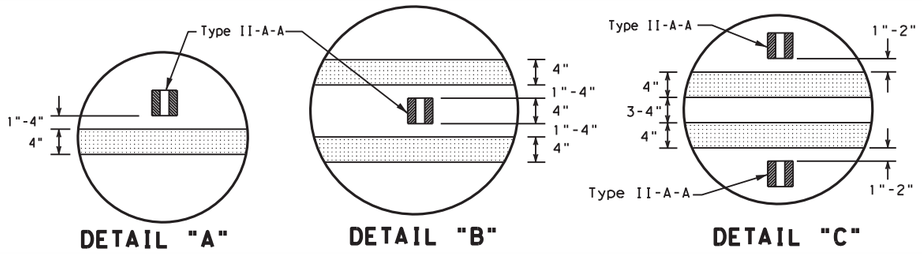

DETAIL "A" **DETAIL "B"** **DETAIL "C"**

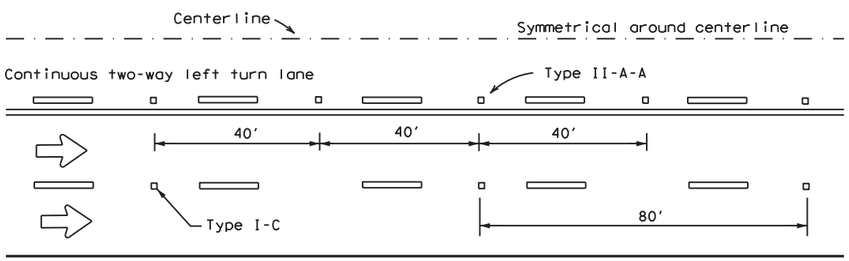

CENTERLINE AND LANE LINES FOR TWO-WAY LEFT TURN LANE

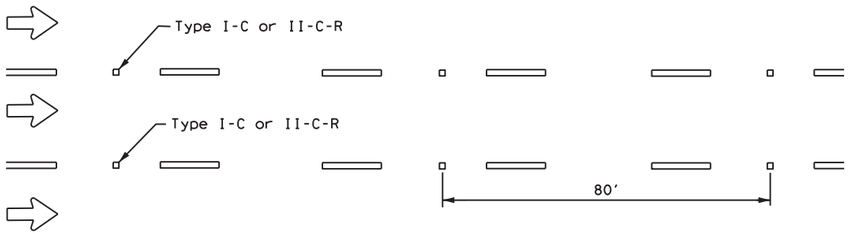

LANE LINES FOR ONE-WAY ROADWAY (NON-FREEWAY FACILITIES)

Raised pavement markers Type II-C-R shall have clear face toward normal traffic and red face toward wrong-way traffic.

MATERIAL SPECIFICATIONS	
PAVEMENT MARKERS (REFLECTORIZED)	DMS-4200
EPOXY AND ADHESIVES	DMS-6100
BITUMINOUS ADHESIVE FOR PAVEMENT MARKERS	DMS-6130
TRAFFIC PAINT	DMS-8200
HOT APPLIED THERMOPLASTIC	DMS-8220
PERMANENT PREFABRICATED PAVEMENT MARKINGS	DMS-8240

All pavement marking materials shall meet the required Departmental Material Specifications as specified by the plans.

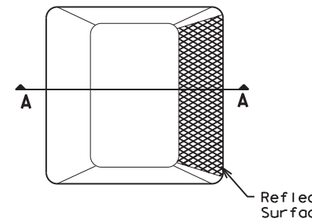

Type I (Top View)

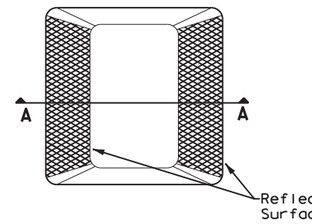

Type II (Top View)

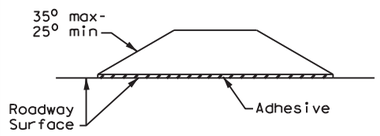

SECTION A

RAISED PAVEMENT MARKERS

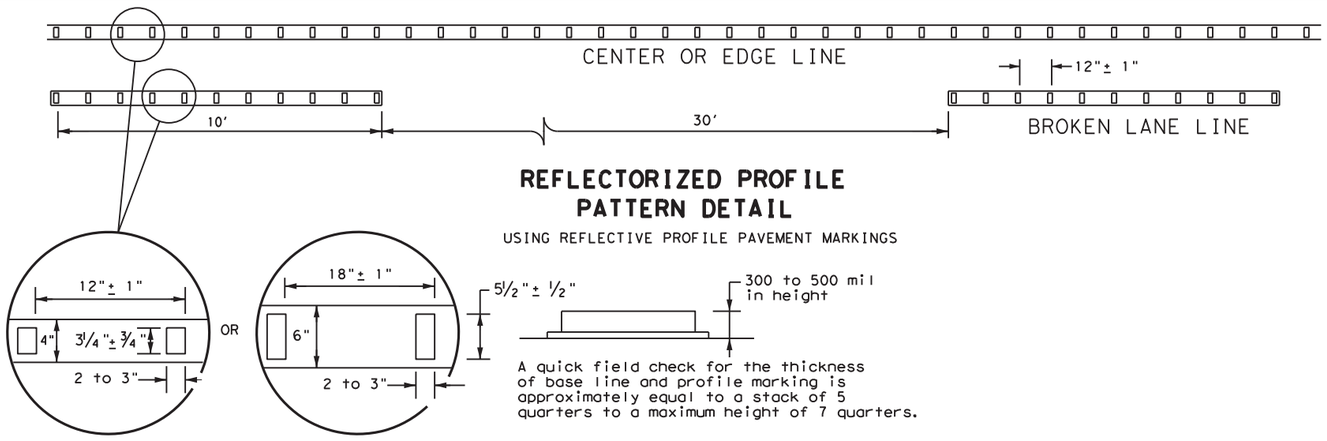

REFLECTORIZED PROFILE PATTERN DETAIL

USING REFLECTIVE PROFILE PAVEMENT MARKINGS

A quick field check for the thickness of base line and profile marking is approximately equal to a stack of 5 quarters to a maximum height of 7 quarters.

4" EDGE LINE, CENTER LINE OR LANE LINE

OPTIONAL 6" EDGE LINE, CENTER LINE OR LANE LINE

NOTE

Profile markings shall not be placed on roadways with a posted speed limit of 45 MPH or less.

GENERAL NOTES

1. All raised pavement markers placed in broken lines shall be placed in line with and midway between the stripes.
2. On concrete pavements the raised pavement markers should be placed to one side of the longitudinal joints.

Texas Department of Transportation

Traffic Safety Division Standard

POSITION GUIDANCE USING RAISED MARKERS RELECTORIZED PROFILE MARKINGS PM(2)-20

FILE: pm2-20.dgn	DN:	CK:	DW:	CK:
©TxDOT April 1977	CONT	SECT	JOB	HIGHWAY
REVISIONS 4-92 2-10 5-00 2-12 8-00 6-20	005	515	072	US 84
	DIST	COUNTY		SHEET NO.
	WAC	MCLENNAN		393

22B

DISCLAIMER:
The use of this standard is governed by the "Texas Engineering Practice Act". No warranty of any kind is made by TxDOT for any purpose whatsoever. TxDOT assumes no responsibility for the conversion of this standard to other formats or for incorrect results or damages resulting from its use.

DATE:
FILE:

DISCLAIMER:
The use of this standard is governed by the "Texas Engineering Practice Act". No warranty of any kind is made by TxDOT for any purpose whatsoever. TxDOT assumes no responsibility for the conversion of this standard to other formats or for incorrect results or damages resulting from its use.

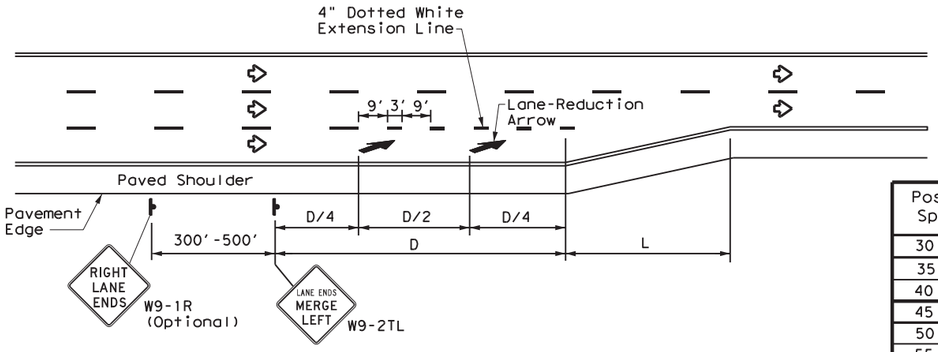

LANE REDUCTION

Posted Speed	D (ft)	L (ft)
30 MPH	460	$L=\frac{WS^2}{60}$
35 MPH	565	
40 MPH	670	
45 MPH	775	L=WS
50 MPH	885	
55 MPH	990	
60 MPH	1,100	
65 MPH	1,200	
70 MPH	1,250	
75 MPH	1,350	

NOTES

1. Lane reduction pavement markings are used where the number of through lanes is reduced because of narrowing of the roadway or because of a section of on-street parking in what would otherwise be a through lane. For Texas Super 2 Passing Lanes, see TS2(PL) standard sheets.
2. On divided highways, an additional W9-1R "RIGHT LANE ENDS" sign may be installed in the median aligned with the W9-1R sign on the right side of the highway.
3. Lane reduction arrows are required for speeds of 45 mph or greater. An optional third lane reduction arrow may be added based on engineering judgement. If used, the optional third lane reduction arrow should be centered between the first and last lane reduction arrows.
4. For lane reductions on Freeways and Expressways, signing shall conform to the TxDOT Freeway Signing Handbook.

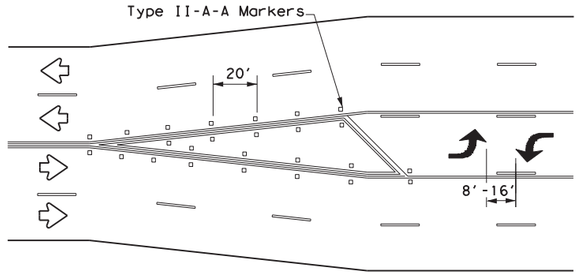

A two-way left-turn (TWLT) lane-use arrow pavement marking should be used at or just downstream from the beginning of a two-way left-turn lane within a corridor. Repeating the marking after each intersection or dedicated turn bay is not required unless stated elsewhere in the plans.

TYPICAL TRANSITION FOR TWLTL AND DIVIDED HIGHWAY

GENERAL NOTES

1. Lane use word and arrow markings shall be used where through lanes approaching an intersection become mandatory turn lanes. Lane use word and arrow markings should be used in auxiliary lanes of substantial length. Lane use arrow markings or word and arrow markings may be used in other lanes and turn bays for emphasis. Details for words and arrows are as shown in the Standard Highway Sign Designs for Texas.
2. When lane-use words and arrow markings are used, two sets of arrows should be used if the length of the bay is greater than 180 feet. When a single lane use arrow or word and arrow marking is used for a short turn lane, it should be located at or near the upstream end of the full-width turn lane.
3. Use raised pavement marker Type I-C with undivided highways, flush medians and two way left turn lanes. Use raised pavement marker Type II-C-R with divided highways and raised medians.
4. Length of turn bays, including taper, deceleration, and storage lengths shall be as shown on the plans or as directed by the Engineer.

MATERIAL SPECIFICATIONS	
PAVEMENT MARKERS (REFLECTORIZED)	DMS-4200
EPOXY AND ADHESIVES	DMS-6100
BITUMINOUS ADHESIVE FOR PAVEMENT MARKERS	DMS-6130
TRAFFIC PAINT	DMS-8200
HOT APPLIED THERMOPLASTIC	DMS-8220
PERMANENT PREFABRICATED PAVEMENT MARKINGS	DMS-8240

All pavement marking materials shall meet the required Departmental Material Specifications as specified by the plans.

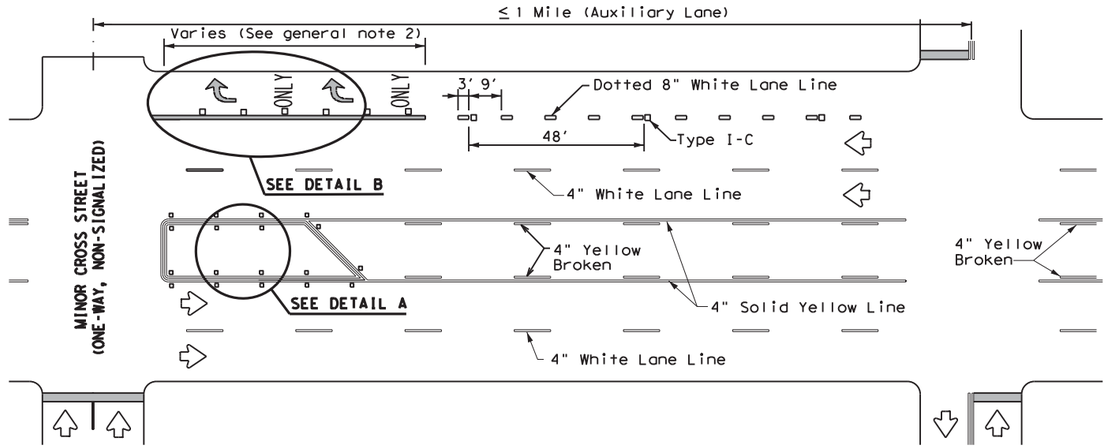

TYPICAL TWLTL AT ONE-WAY STREET AND RIGHT TURN AUXILIARY LANE

TYPICAL TWO-LANE HIGHWAY INTERSECTION WITH LEFT TURN BAYS

TYPICAL TWLTL AT TWO-WAY CROSS STREET AND RIGHT TURN LANE DROP

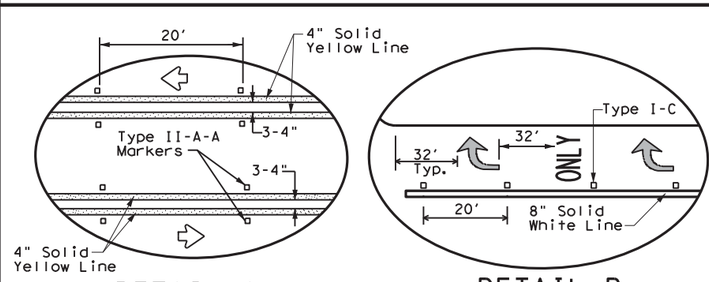

DETAIL A DETAIL B

Texas Department of Transportation — Traffic Safety Division Standard

TWO-WAY LEFT TURN LANES, RURAL LEFT TURN BAYS, AND LANE REDUCTION PAVEMENT MARKINGS PM(3)-20

FILE: pm3-20.dgn	DN:	CK:	DW:	CK:
©TxDOT April 1998	CONT	SECT	JOB	HIGHWAY
REVISIONS	005	515	072	US 84
5-00 2-10	DIST	COUNTY		SHEET NO.
8-00 2-12	WAC	MCLENNAN		394
3-03 6-20				

DATE:
FILE:

22C

DISCLAIMER:
The use of this standard is governed by the "Texas Engineering Practice Act". No warranty of any kind is made by TxDOT for any purpose whatsoever. TxDOT assumes no responsibility for the conversion of this standard to other formats or for incorrect results or damages resulting from its use.

DATE:
FILE:

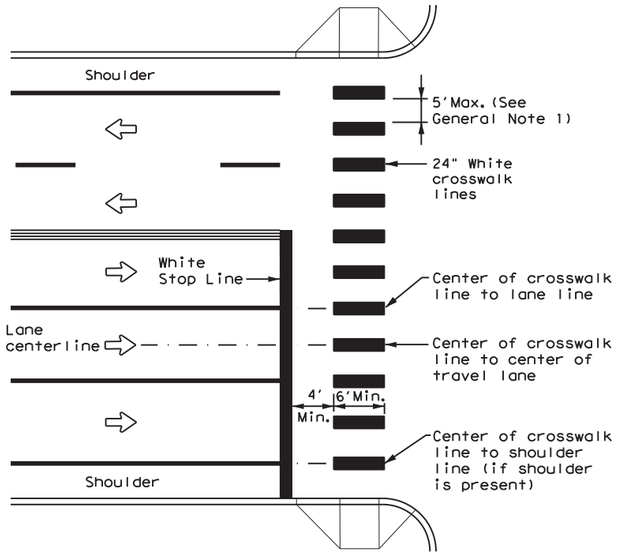

HIGH-VISIBILITY LONGITUDINAL CROSSWALK AT CONTROLLED APPROACH

GENERAL NOTES

1. Longitudinal crosswalk lines should not be placed in the wheel path of vehicles. Center the crosswalk lines on travel lanes, lane lines, and shoulder lines (if present).
2. A minimum 6" clear distance shall be provided to the curb face. If the last crosswalk line falls into this distance it must be omitted.
3. For divided roadways, adjustments in spacing of the crosswalk lines should be made in the median so that the crosswalk lines are maintained in their proper location across the travel portion of the roadway.
4. At skewed crosswalks, the crosswalk lines are to remain parallel to the lane lines.
5. Each crosswalk shall be a minimum of 6' wide.
6. The High-Visibility Longitudinal Crosswalk is the preferred crosswalk pattern on State Highways. Other crosswalk patterns as shown in the "Texas Manual on Uniform Traffic Control Devices" may be used. All crosswalk designs and dimension shall comply with the "Texas Manual on Uniform Traffic Control Devices."
7. Final placement of Stop Bar/Yield Triangles and Crosswalk shall be approved by the Engineer in the field.

MATERIAL SPECIFICATIONS	
PAVEMENT MARKERS (REFLECTORIZED)	DMS-4200
EPOXY AND ADHESIVES	DMS-6100
BITUMINOUS ADHESIVE FOR PAVEMENT MARKERS	DMS-6130
TRAFFIC PAINT	DMS-8200
HOT APPLIED THERMOPLASTIC	DMS-8220
PERMANENT PREFABRICATED PAVEMENT MARKINGS	DMS-8240

All pavement marking materials shall meet the required Departmental Material Specifications as specified by the plans.

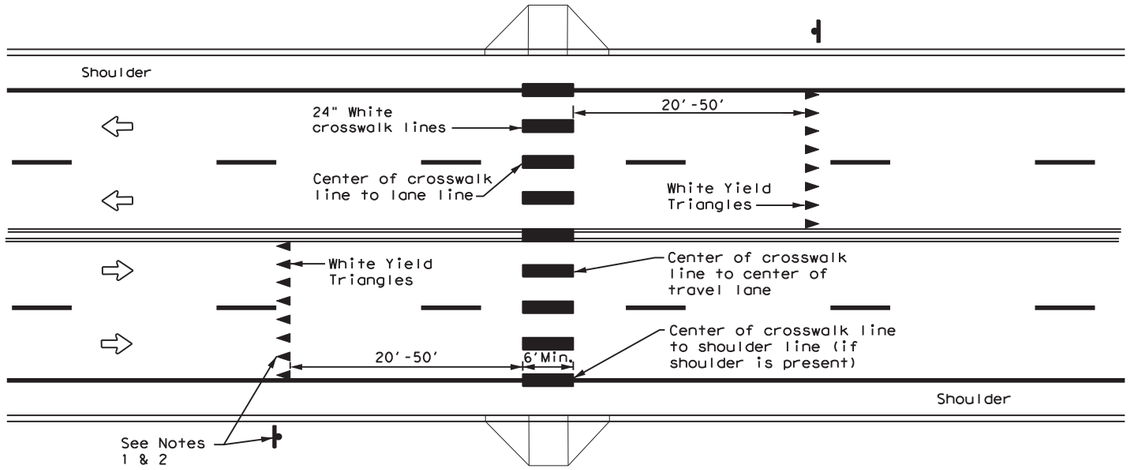

UNSIGNALIZED MID BLOCK HIGH-VISIBILITY LONGITUDINAL CROSSWALK

NOTES

1. Use yield triangles with "Yield Here to Pedestrians" signs at unsignalized mid block crosswalks.
2. Use stop bars with "Stop Here on Red" signs at mid block crosswalks controlled by traffic signals or pedestrian hybrid beacons.

Texas Department of Transportation

Traffic Safety Division Standard

CROSSWALK PAVEMENT MARKINGS

PM(4)-20

FILE: pm4-20.dgn	DN:	CK:	DW:	CK:
© TxDOT June 2020	CONT	SECT	JOB	HIGHWAY
REVISIONS	005	515	072	US 84
	DIST	COUNTY		SHEET NO.
	WAC	MCLENNAN		395

22D

DISCLAIMER: The use of this standard is governed by the "Texas Engineering Practice Act". No warranty of any kind is made by TxDOT for any purpose whatsoever. TxDOT assumes no responsibility for the conversion of this standard to other formats or for incorrect results or damages resulting from its use.

SIGN SUPPORT DESCRIPTIVE CODES

(Descriptive Codes correspond to project estimate and quantities sheets)

SM RD SGN ASSM TY XXXXX(X)XX(X-XXXX)

Post Type

FRP = Fiberglass Reinforced Plastic Pipe (see SMD(FRP))
TWT = Thin-Walled Tubing (see SMD(TWT))
10BWG = 10 BWG Tubing (see SMD(SLIP-1) to (SLIP-3))
S80 = Schedule 80 Pipe (see SMD(SLIP-1) to (SLIP-3))

Number of Posts (1 or 2)

Anchor Type

UA = Universal Anchor - Concreted (see SMD(FRP) and (TWT))
UB = Universal Anchor - Bolted down (see SMD(FRP) and (TWT))
WS = Wedge Anchor Steel - (see SMD(TWT))
WP = Wedge Anchor Plastic (see SMD(TWT))
SA = Slipbase - Concreted (see SMD(SLIP-1) to (SLIP-3))
SB = Slipbase - Bolted Down (see SMD(SLIP-1) to (SLIP-3))

Sign Mounting Designation

P = Prefab. "Plain" (see SMD(SLIP-1) to (SLIP-3), (TWT), (FRP))
T = Prefab. "T" (see SMD(SLIP-1) to (SLIP-3), (TWT))
U = Prefab. "U" (see SMD(SLIP-1) to (SLIP-3))
IF REQUIRED
1EXT or 2EXT = Number of Extensions (see SMD(SLIP-1) to (SLIP-3), (TWT))
BM = Extruded Wind Beam (see SMD(SLIP-1) to (SLIP-3))
WC = 1.12 #/ft Wing Channel (see SMD(SLIP-1) to (SLIP-3))
EXAL = Extruded Aluminum Sign Panels (see SMD(SLIP-1) to (SLIP-3))

REQUIRED CLEARANCE FOR BREAKAWAY SUPPORT

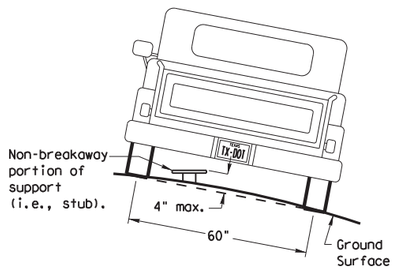

To avoid vehicle undercarriage snagging, any substantial remains of a breakaway support, when it is broken away, should not project more than 4 inches above a 60-inch chord (i.e., typical space between wheel paths).

SIGN LOCATION

PAVED SHOULDERS

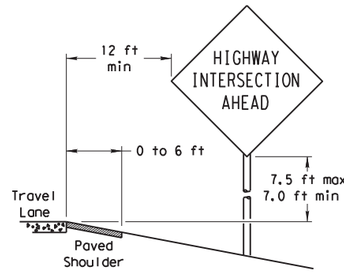

LESS THAN 6 FT. WIDE

When the shoulder is 6 ft. or less in width, the sign must be placed at least 12 ft. from the edge of the travel lane.

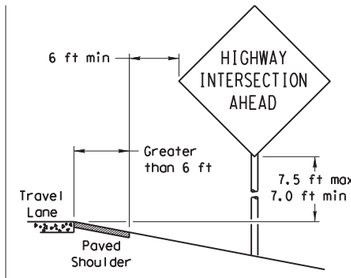

GREATER THAN 6 FT. WIDE

When the shoulder is greater than 6 ft in width, the sign must be placed at least 6 ft. from the edge of the shoulder.

T-INTERSECTION

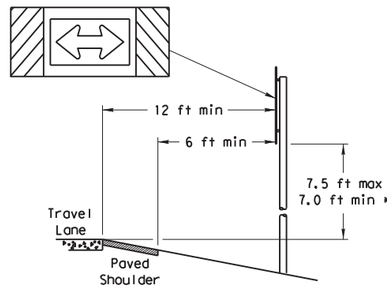

When this sign is needed at the end of a two-lane, two way roadway, the right edge of the sign should be in line with the centerline of the roadway. Place as close to ROW as practical.

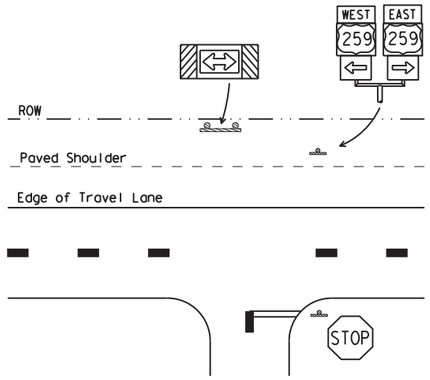

BEHIND BARRIER

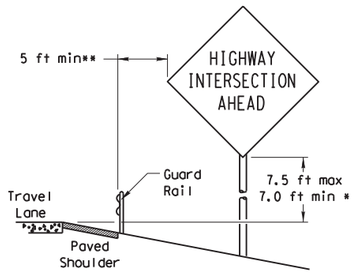

BEHIND GUARDRAIL

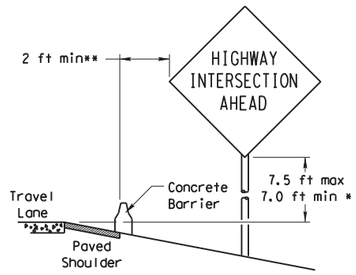

BEHIND CONCRETE BARRIER

**Sign clearance based on distance required for proper guard rail or concrete barrier performance.

* Signs shall be mounted using the following condition that results in the greatest sign elevation:

(1) a minimum of 7 to a maximum of 7.5 feet above the edge of the travel lane or

(2) a minimum of 7 to a maximum of 7.5 feet above the grade at the base of the support when sign is installed on the backslope.

The maximum values may be increased when directed by the Engineer.

See the Traffic Operations Division website for detailed drawings of sign clamps, Triangular Slipbase System components and Wedge Anchor System components.

The website address is:
http://www.txdot.gov/publications/traffic.htm

No more than 2 sign posts should be located within a 7 ft. circle.

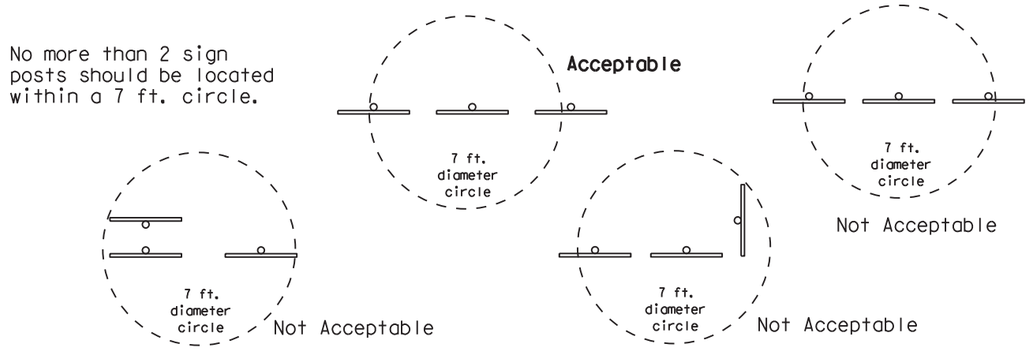

TYPICAL SIGN ATTACHMENT DETAIL

Single Signs

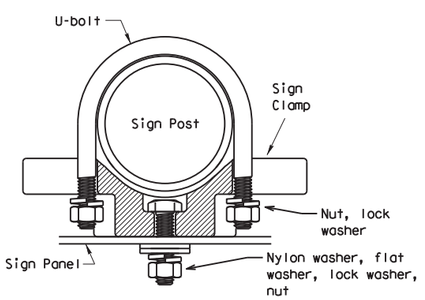

Bolts used to mount sign panels to the clamp are 5/16-18 UNC galvanized square head with nut, nylon washer, flat washer and lock washer. The bolt length is 1 inch for aluminum.

When two sign clamps are used to mount signs back-to-back, use a 5/16-18 UNC galvanized hex head per ASTM A307 with nut and helical-spring lock washer. The approximate bolt lengths for various post sizes and sign clamp types are given in the table at right. The bolt length may need to be adjusted depending upon field conditions.

Sign clamps may be either the specific size clamp or the universal clamp.

Back-to-Back Signs

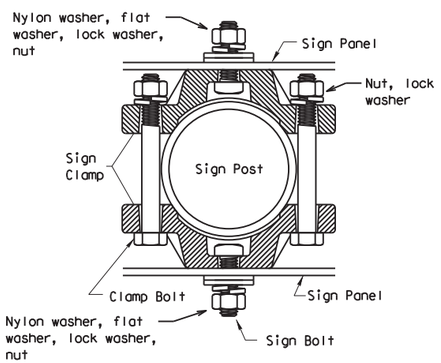

Pipe Diameter	Approximate Bolt Length	
	Specific Clamp	Universal Clamp
2" nominal	3"	3 or 3 1/2"
2 1/2" nominal	3 or 3 1/2"	3 1/2 or 4"
3" nominal	3 1/2 or 4"	4 1/2"

SIGNS WITH PLAQUES

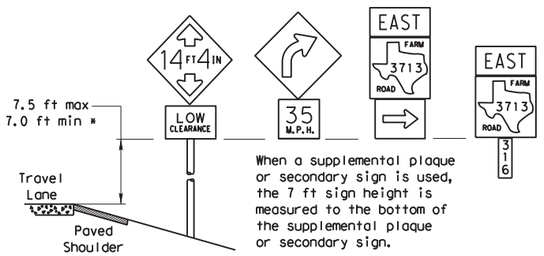

When a supplemental plaque or secondary sign is used, the 7 ft sign height is measured to the bottom of the supplemental plaque or secondary sign.

CURB & GUTTER OR RAISED ISLAND

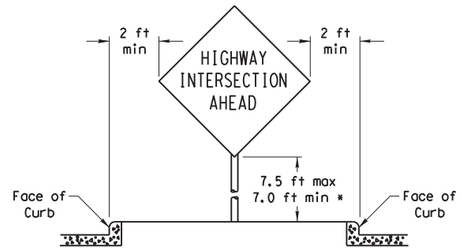

RESTRICTED RIGHT-OF-WAY

(When 6 ft min. is not possible.)

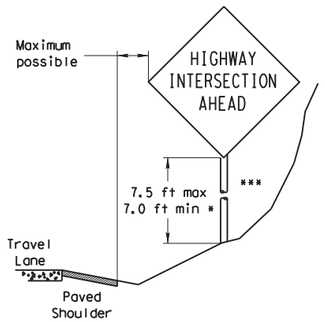

Right-of-way restrictions may be created by rocks, water, vegetation, forest, buildings, a narrow island, or other factors.

In situations where a lateral restriction prevents the minimum horizontal clearance from the edge of the travel lane, signs should be placed as far from the travel lane as practical.

*** Post may be shorter if protected by guardrail or if Engineer determines the post could not be hit due to extreme slope.

Texas Department of Transportation
Traffic Operations Division

SIGN MOUNTING DETAILS SMALL ROADSIDE SIGNS GENERAL NOTES & DETAILS

SMD(GEN)-08

©TxDOT July 2002

REVISIONS
9-08

DN: TXDOT	CK: TXDOT	DW: TXDOT	CK: TXDOT

CONT	SECT	JOB	HIGHWAY
0055	15	072	US 84

DIST	COUNTY	SHEET NO.
WAC	MCLENNAN	396

DATE:
FILE:

DISCLAIMER: The use of this standard is governed by the "Texas Engineering Practice Act". No warranty of any kind is made by TxDOT for any purpose whatsoever. TxDOT assumes no responsibility for the conversion of this standard to other formats or for incorrect results or damages resulting from its use.

TRIANGULAR SLIPBASE INSTALLATION GENERAL REQUIREMENTS

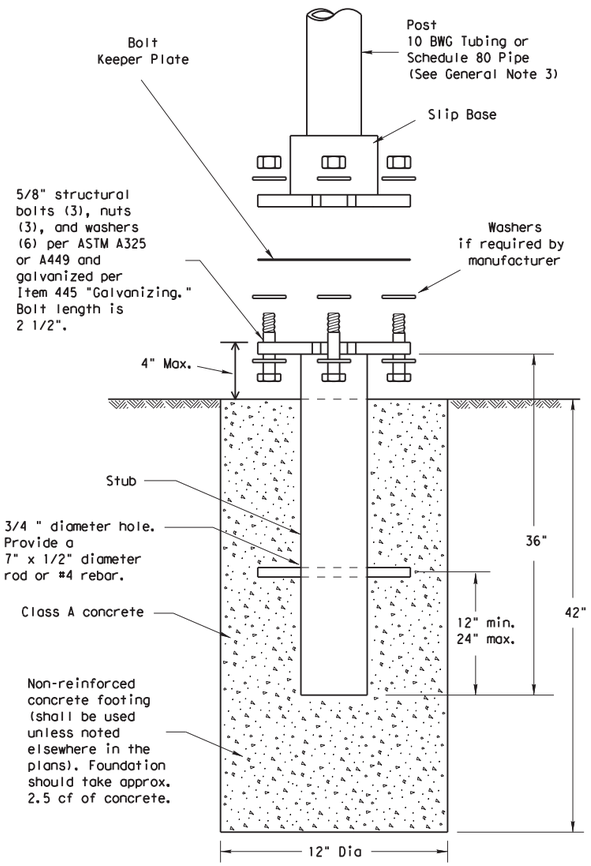

SM RD SGN ASSM TY XXXXX(X)SA(X-XXXX)

NOTE

There are various devices approved for the Triangular Slipbase System. Please reference the Material Producer List for approved slip base systems. http://www.txdot.gov/business/producer_list.htm The devices shall be installed per manufacturers' recommendations. Installation procedures shall be provided to the Engineer by Contractor.

GENERAL NOTES:

1. Slip base shall be permanently marked to indicate manufacturer. Method, design, and location of marking are subject to approval of the TxDOT Traffic Standards Engineer.
2. Material used as post with this system shall conform to the following specifications:
   10 BWG Tubing (2.875" outside diameter)
   - 0.134" nominal wall thickness
   - Seamless or electric-resistance welded steel tubing or pipe
   - Steel shall be HSLAS Gr 55 per ASTM A1011 or ASTM A1008
   - Other steels may be used if they meet the following:
     - 55,000 PSI minimum yield strength
     - 70,000 PSI minimum tensile strength
     - 20% minimum elongation in 2"
   - Wall thickness (uncoated) shall be within the range of 0.122" to 0.138"
   - Outside diameter (uncoated) shall be within the range of 2.867" to 2.883"
   - Galvanization per ASTM A123 or ASTM A653 G210. For precoated steel tubing (ASTM A653), recoat tube outside diameter weld seam by metallizing with zinc wire per ASTM B833.

   Schedule 80 Pipe (2.875" outside diameter)
   - 0.276" nominal wall thickness
   - Steel tubing per ASTM A500 Gr C
   - Other seamless or electric-resistance welded steel tubing or pipe with equivalent outside diameter and wall thickness may be used if they meet the following:
     - 46,000 PSI minimum yield strength
     - 62,000 PSI minimum tensile strength
     - 21% minimum elongation in 2"
   - Wall thickness (uncoated) shall be within the range of 0.248" to 0.304"
   - Outside diameter (uncoated) shall be within the range of 2.855" to 2.895"
   - Galvanization per ASTM A123
3. See the Traffic Operations Division website for detailed drawings of sign clamps and Texas Universal Triangular Slipbase System components. The website address is: http://www.txdot.gov/publications/traffic.htm
4. Sign supports shall not be spliced except where shown. Sign support posts shall not be spliced.

ASSEMBLY PROCEDURE

Foundation
1. Prepare 12-inch diameter by 42-inch deep hole. If solid rock is encountered, the depth of the foundation may be reduced such that it is embedded a minimum of 18 inches into the solid rock.
2. The Engineer may permit batches of concrete less than 2 cubic yards to be mixed with a portable, motor-driven concrete mixer. For small placements less than 0.5 cubic yards, hand mixing in a suitable container may be allowed by Engineer. Concrete shall be Class A.
3. Push the pipe end of the slip base stub into the center of the concrete. Rotate the stub back and forth while pushing it down into the concrete to assure good contact between the concrete and stub. Continue to work the stub into the concrete until it is between 2 to 4 inches above the ground.
4. Plumb the stub. Allow a minimum of 4 days to set, unless otherwise directed by the Engineer.
5. The triangular slipbase system is multidirectional and is designed to release when struck from any direction.

Support
1. Cut support so that the bottom of the sign will be 7 to 7.5 feet above the edge of the travelway (i.e., edge of the closest lane) when slip plate is below the edge of pavement or 7 to 7.5 feet above slip plate when the slip plate is above the edge of the travelway. The cut shall be plumb and straight.
2. Attach sign to support using connections shown. When multiple signs are installed on the same support, ensure the minimum clearance between each sign is maintained. See SMD(SLIP-2) for clearances based on sign types.

CONCRETE ANCHOR

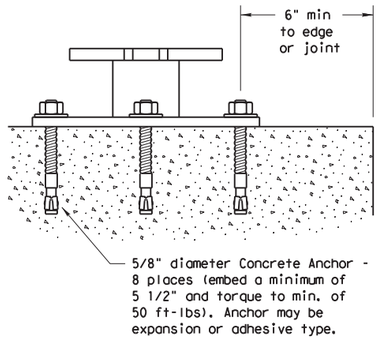

SM RD SGN ASSM TY XXXXX(X)SB(X-XXXX)

Concrete anchor consists of 5/8" diameter stud bolt with UNC series bolt threads on the upper end. Heavy hex nut per ASTM A563, and hardened washer per ASTM F436. The stud bolt shall have a minimum yield and ultimate tensile strength of 50 and 75 KSI, respectively. Nuts, bolts and washers shall be galvanized per Item 445, "Galvanizing." Adhesive type anchors shall have stud bolts installed with Type III epoxy per DMS-6100, "Epoxies and Adhesives." Adhesive anchors may be loaded after adequate epoxy cure time per the manufacturer's recommendations. Top of bolt shall extend at least flush with top of the nut when installed. The anchor, when installed in 4000 psi normal-weight concrete with a 5 1/2" minimum embedment, shall have a minimum allowable tension and shear of 3900 and 3100 psi, respectively.

Texas Department of Transportation
Traffic Operations Division

SIGN MOUNTING DETAILS SMALL ROADSIDE SIGNS TRIANGULAR SLIPBASE SYSTEM

SMD(SLIP-1)-08

© TxDOT July 2002

DN: TXDOT	CK: TXDOT	DW: TXDOT	CK: TXDOT
CONT	SECT	JOB	HIGHWAY
005515		072	US 84
DIST	COUNTY		SHEET NO.
WAC	MCLENNAN		397

REVISIONS
9-08

DATE:
FILE:

DISCLAIMER: The use of this standard is governed by the "Texas Engineering Practice Act". No warranty of any kind is made by TxDOT for any purpose whatsoever. TxDOT assumes no responsibility for the conversion of this standard to other formats or for incorrect results or damages resulting from its use.

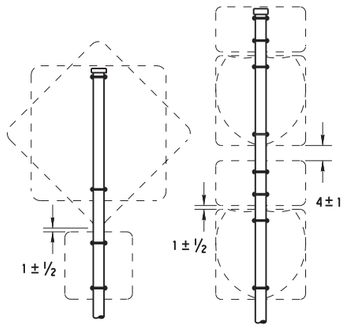

SM RD SGN ASSM TY XXXXX(1)XX(P)

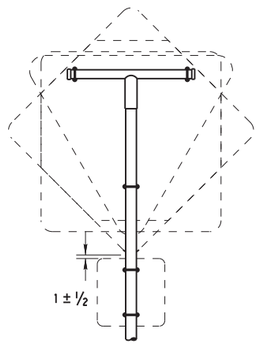

SM RD SGN ASSM TY XXXXX(1)XX(T)

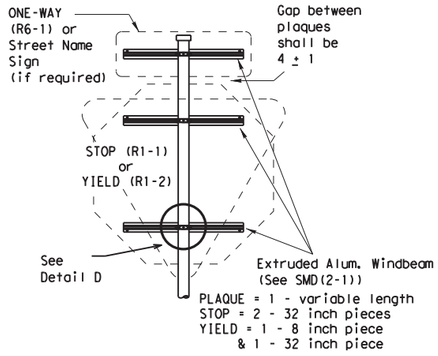

SM RD SGN ASSM TY XXXXX(1)XX(P-BM)

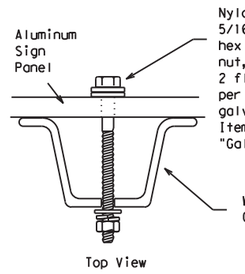

Detail A

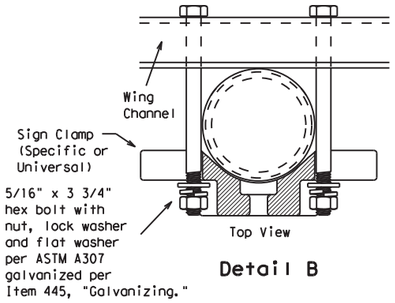

Detail B

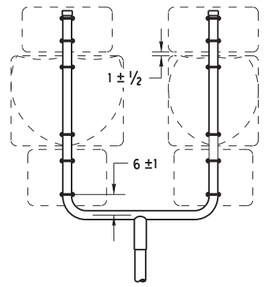

SM RD SGN ASSM TY XXXXX(1)XX(U)

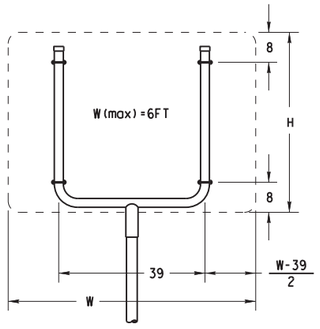

SM RD SGN ASSM TY XXXXX(1)XX(U)

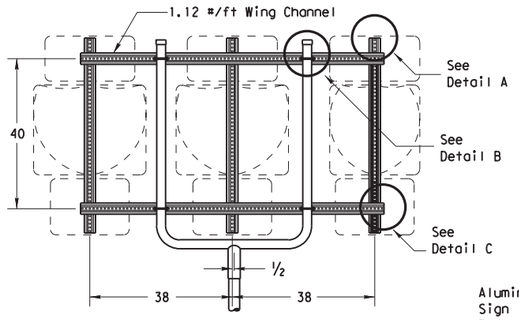

SM RD SGN ASSM TY XXXXX(1)XX(U-WC)
(See Note 11)

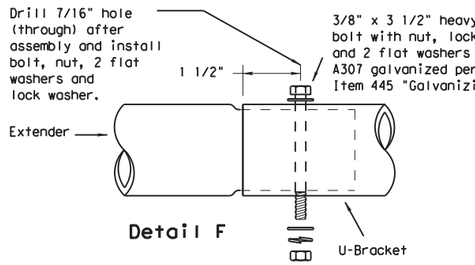

Detail F

Splices shall only be allowed behind the sign substrate.

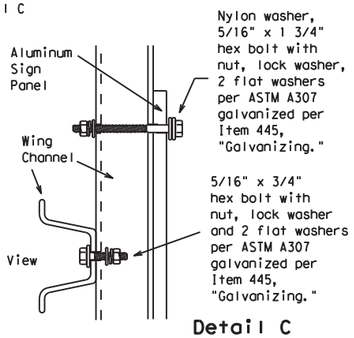

Detail C

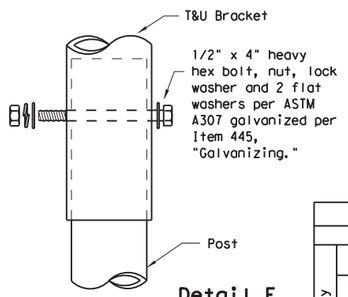

Detail E

GENERAL NOTES:

1.

SIGN SUPPORT	# OF POSTS	MAX. SIGN AREA
10 BWG	1	16 SF
10 BWG	2	32 SF
Sch 80	1	32 SF
Sch 80	2	64 SF

2. The Engineer may require that a Schedule 80 post be used in place of a 10 BWG where a sign height is abnormally high due to a fill slope.
3. Sign supports shall not be spliced except where shown. Sign support posts shall not be spliced.
4. Aluminum sign blanks shall conform to Departmental Material Specifications DMS-7110 and shall have the following minimum thicknesses: 0.080 for signs less than 7.5 sq. ft., 0.100 for signs 7.5 to 15 sq. ft., and 0.125 for signs greater than 15 sq. ft.
5. Signs that require specific supports due to reasons in addition to windloading are indicated on the "REQUIRED SUPPORT" table on this sheet.
6. For horizontal rectangular signs fabricated from flat aluminum, T-brackets are used for signs 24 inches or less in height. U-brackets are used for signs of greater height.
7. When two triangular slipbase supports are used to support a single sign, they shall not be "rigidly" connected to each other except through the sign panel. This will allow each support to act independently when impacted by an errant vehicle.
8. Wing channel shall meet ASTM A 1011 SS Gr 50 and be galvanized per ASTM A 123.
9. Excess pipe, wing channel, or windbeam shall be cut off so that it does not extend beyond the sign panel (i.e., excess support shall not be visible when the sign is viewed from the front.) Repair galvanized coating at cut support ends per Item 445, "Galvanizing."
10. Additional route markers may be added vertically, provided the total sign area does not exceed the maximum allowable amount per Note 1.
11. Additional sign clamp required on the "T-bracket" post for 24 inch height signs. Place the clamp 3 inches above bottom of sign when possible.
12. Post open ends shall be fitted with Friction Caps.
13. Sign blanks shall be the sizes and shapes shown on the plans.

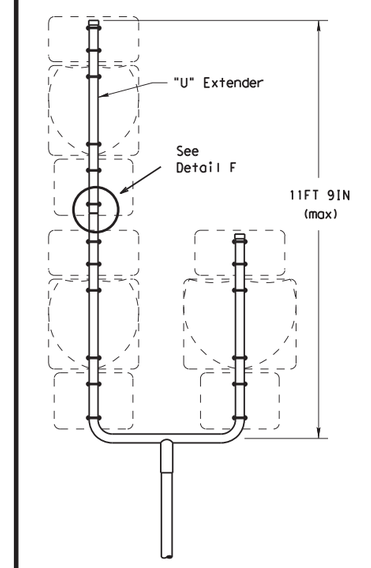

SM RD SGN ASSM TY S80(1)XX(U-1EXT)

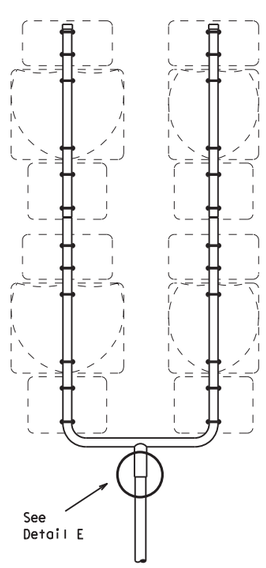

SM RD SGN ASSM TY S80(1)XX(U-2EXT)

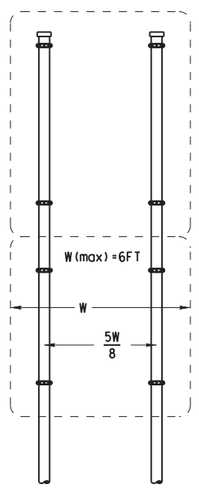

SM RD SGN ASSYM TY XXXXX(2)XX(P)

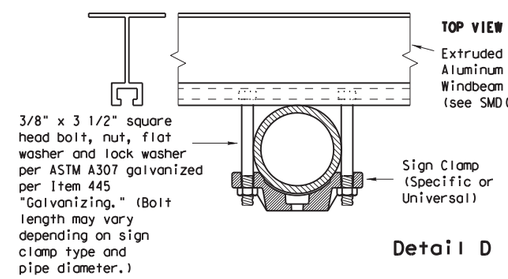

Detail D

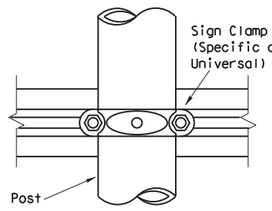

REQUIRED SUPPORT		
	SIGN DESCRIPTION	SUPPORT
Regulatory	48-inch STOP sign (R1-1)	TY 10BWG(1)XX(T) TY 10BWG(1)XX(P-BM)
	60-inch YIELD sign (R1-2)	TY 10BWG(1)XX(T) TY 10BWG(1)XX(P-BM)
	48x16-inch ONE-WAY sign (R6-1)	TY 10BWG(1)XX(T) TY 10BWG(1)XX(P-BM)
	36x48, 48x36, and 48x48-inch signs	TY 10BWG(1)XX(T)
	48x60-inch signs	TY S80(1)XX(T)
Warning	48x48-inch signs (diamond or square)	TY 10BWG(1)XX(T)
	48x60-inch signs	TY S80(1)XX(T)
	48-inch Advance School X-ing sign (S1-1)	TY 10BWG(1)XX(T)
	48-inch School X-ing sign (S2-1)	TY 10BWG(1)XX(T)
	Large Arrow sign (W1-6 & W1-7)	TY 10BWG(1)XX(T)

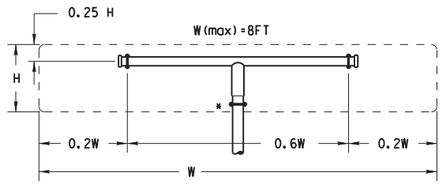

All dimensions are in english unless detailed otherwise.

SM RD SGN ASSM TY XXXXX(1)XX(T)
(* - See Note 12)

FRICTION CAP DETAIL

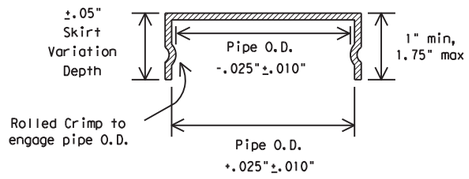

Friction caps may be manufactured from hot rolled or cold rolled steel sheets. The minimum sheet metal thickness shall be 24 gauge for all cap sizes.

The rim edges shall be reasonably straight and smooth. Caps shall be sized and formed in such a manner as to produce a drive-on friction fit and have no tendency to rock when seated on the pipe. The depth shall be sufficient to give positive protection against entrance of rainwater. They shall be free of sharp creases or indentations and show no evidence of metal fracture.

Caps shall have an electrodeposited coating of zinc in accordance with the requirements of ASTM B633 Class FE/ZN 8.

Texas Department of Transportation
Traffic Operations Division

SIGN MOUNTING DETAILS SMALL ROADSIDE SIGNS TRIANGULAR SLIPBASE SYSTEM

SMD(SLIP-2)-08

©TxDOT July 2002

DN: TxDOT	CK: TxDOT	DW: TxDOT	CK: TxDOT
CONT	SECT	JOB	HIGHWAY
0055	15	072	US 84
DIST	COUNTY		SHEET NO.
WAC	MCLENNAN		398

9-08 REVISIONS

DATE:
FILE:

DISCLAIMER: The use of this standard is governed by the "Texas Engineering Practice Act". No warranty of any kind is made by TxDOT for any purpose whatsoever. TxDOT assumes no responsibility for the conversion of this standard to other formats or for incorrect results or damages resulting from its use.

DATE:
FILE:

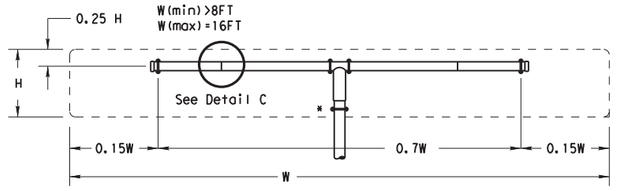

SM RD SGN ASSM TY XXXXX(1)XX(T-2EXT)
(* - See Note 12)

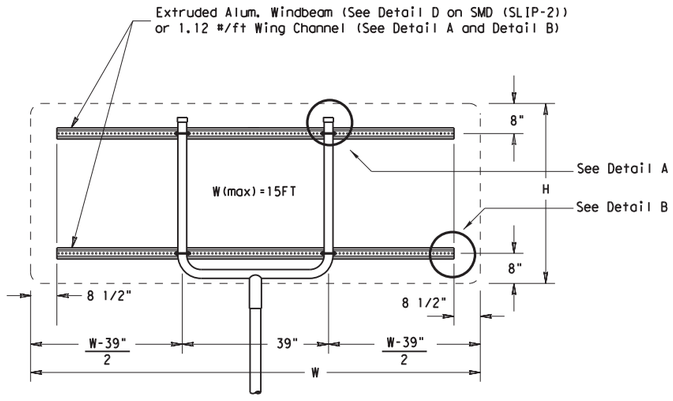

SM RD SGN ASSM TY XXXXX(1)XX(U-XX)

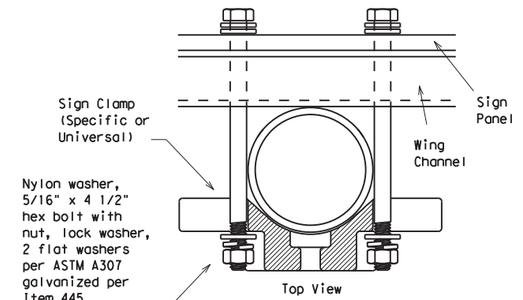

Detail A

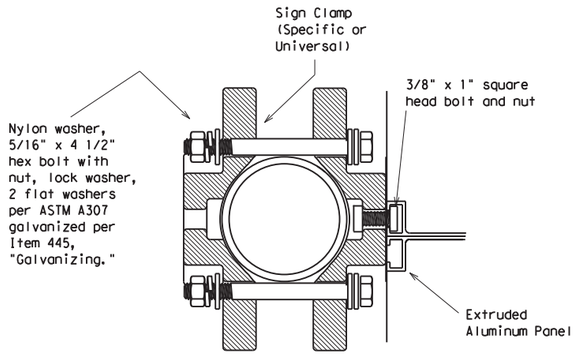

Detail D
EXTRUDED ALUMINUM SIGN WITH T BRACKET

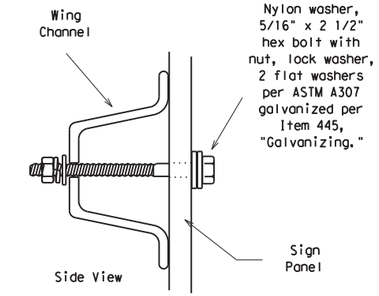

Detail B

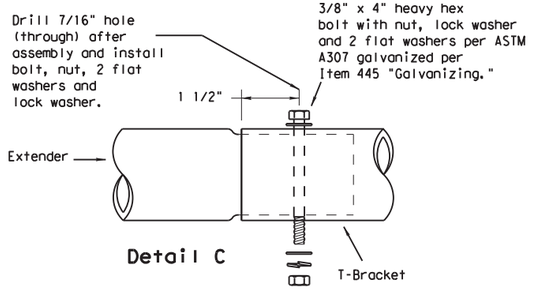

Detail C

Splices shall only be allowed behind the sign substrate.

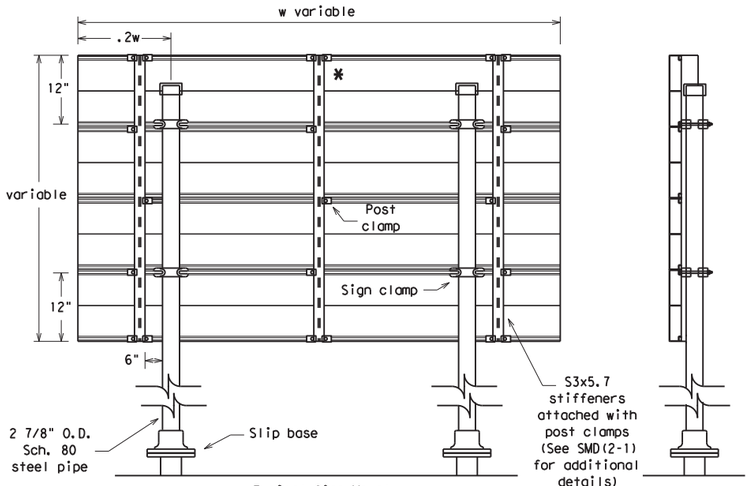

Typical Sign Mount

SM RD SGN ASSM TY S80(2)XX(P-EXAL)

* Additional stiffener placed at approximate center of signs when sign width is greater than 10'.

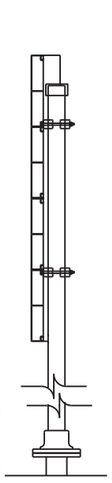

See Detail E
for clamp installation

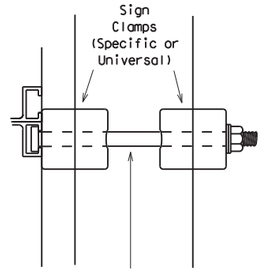

Detail E

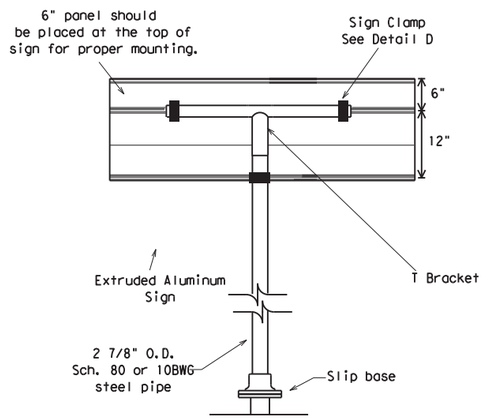

Extruded Aluminum Sign
With T Bracket

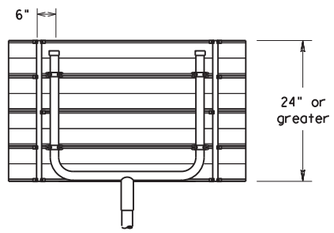

Use Extruded Alum. Windbeam as stiffeners
See SMD (2-1) for additional details

See Detail E
for clamp installation

GENERAL NOTES:

SIGN SUPPORT	# OF POSTS	MAX. SIGN AREA
10 BWG	1	16 SF
10 BWG	2	32 SF
Sch 80	1	32 SF
Sch 80	2	64 SF

1. See table above.
2. The Engineer may require that a Schedule 80 post be used in place of a 10 BWG where a sign height is abnormally high due to a fill slope.
3. Sign supports shall not be spliced except where shown. Sign support posts shall not be spliced.
4. Aluminum sign blanks shall conform to Departmental Material Specifications DMS-7110 and shall have the following minimum thicknesses: 0.080 for signs less than 7.5 sq. ft., 0.100 for signs 7.5 to 15 sq. ft., and 0.125 for signs greater than 15 sq. ft.
5. Signs that require specific supports due to reasons in addition to windloading are indicated on the "REQUIRED SUPPORT" table on this sheet.
6. For horizontal rectangular signs fabricated from flat aluminum, T-brackets are used for signs 24 inches or less in height. U-brackets are used for signs of greater height.
7. When two triangular slipbase supports are used to support a single sign, they shall not be "rigidly" connected to each other except through the sign panel. This will allow each support to act independently when impacted by an errant vehicle.
8. Wing channel shall meet ASTM A 1011 SS Gr 50 and be galvanized per ASTM A 123.
9. Excess pipe, wing channel, or windbeam shall be cut off so that it does not extend beyond the sign panel (i.e., excess support shall not be visible when the sign is viewed from the front.) Repair galvanized coating at cut support ends per Item 445, "Galvanizing."
10. Sign blanks shall be the sizes and shapes shown on the plans.
11. Additional sign clamp required on the "T-bracket" post for 24 inch high signs. Place the clamp 3 inches above bottom of sign when possible.
12. Post open ends shall be fitted with Friction Caps.

REQUIRED SUPPORT

	SIGN DESCRIPTION	SUPPORT
Regulatory	48-inch STOP sign (R1-1)	TY 10BWG(1)XX(T) TY 10BWG(1)XX(P-BM)
	60-inch YIELD sign (R1-2)	TY 10BWG(1)XX(T) TY 10BWG(1)XX(P-BM)
	48x16-inch ONE-WAY sign (R6-1)	TY 10BWG(1)XX(T) TY 10BWG(1)XX(P-BM)
	36x48, 48x36, and 48x48-inch signs	TY 10BWG(1)XX(T)
	48x60-inch signs	TY S80(1)XX(T)
Warning	48x48-inch signs (diamond or square)	TY 10BWG(1)XX(T)
	48x60-inch signs	TY S80(1)XX(T)
	48-inch Advance School X-ing sign (S1-1)	TY 10BWG(1)XX(T)
	48-inch School X-ing sign (S2-1)	TY 10BWG(1)XX(T)
	Large Arrow sign (W1-6 & W1-7)	TY 10BWG(1)XX(T)

Texas Department of Transportation
Traffic Operations Division

SIGN MOUNTING DETAILS
SMALL ROADSIDE SIGNS
TRIANGULAR SLIPBASE SYSTEM

SMD(SLIP-3)-08

©TxDOT July 2002

REVISIONS	DN: TXDOT	CK: TXDOT	DW: TXDOT	CK: TXDOT
9-08	CONT	SECT	JOB	HIGHWAY
	005	515	072	US 84
	DIST	COUNTY		SHEET NO.
	WAC	MCLENNAN		399

DISCLAIMER: The use of this standard is governed by the "Texas Engineering Practice Act". No warranty of any kind is made by TxDOT for any purpose whatsoever. TxDOT assumes no responsibility for the conversion of this standard to other formats or for incorrect results or damages resulting from its use.

Arm Length	ROUND POLES					POLYGONAL POLES					Foundation Type
	D_B	D_{19}	D_{24}	D_{30}	① thk	D_B	D_{19}	D_{24}	D_{30}	① thk	
ft.	in.	in.	in.	in.	in.	in.	in.	in.	in.	in.	
20	10.5	7.8	7.1	6.3	.179	11.5	8.5	7.7	6.8	.179	30-A
24	11.0	8.3	7.6	6.8	.179	12.0	9.0	8.2	7.3	.179	30-A
28	11.5	8.8	8.1	7.3	.179	12.5	9.5	8.7	7.8	.179	30-A
32	12.5	9.8	9.1	8.3	.179	12.0	9.0	8.2	7.3	.239	30-A
36	12.0	9.3	8.6	7.8	.239	12.5	9.5	8.7	7.8	.239	36-A
40	12.0	9.3	8.6	7.8	.239	13.5	10.5	9.7	8.8	.239	36-A
44	12.5	9.8	9.1	8.3	.239	14.0	11.0	10.2	9.3	.239	36-A
48	13.0	10.3	9.6	8.8	.239	15.0	12.0	11.2	10.3	.239	36-A

Arm Length	ROUND ARMS					POLYGONAL ARMS				
	L_1	D_1	D_2	① thk	Rise	L_1	D_1	② D_2	① thk	Rise
ft.	ft.	in.	in.	in.		ft.	in.	in.	in.	
20	19.1	6.5	3.8	.179	1'-9"	19.1	7.0	3.5	.179	1'-8"
24	23.1	7.5	4.3	.179	1'-10"	23.1	7.5	3.5	.179	1'-9"
28	27.1	8.0	4.2	.179	1'-11"	27.1	8.0	3.5	.179	1'-10"
32	31.0	9.0	4.7	.179	2'-1"	31.0	9.0	3.5	.179	2'-0"
36	35.0	9.5	4.6	.179	2'-4"	35.0	10.0	3.5	.179	2'-1"
40	39.0	9.5	4.1	.239	2'-8"	39.0	9.5	3.5	.239	2'-3"
44	43.0	10.0	4.1	.239	2'-11"	43.0	10.0	3.5	.239	2'-6"
48	47.0	10.5	4.1	.239	3'-4"	47.0	11.0	3.5	.239	2'-9"

D_B = Pole Base O.D.
D_{19} = Pole Top O.D. with no Luminaire and no ILSN
D_{24} = Pole Top O.D. with ILSN w/out Luminaire
D_{30} = Pole Top O.D. with Luminaire
D_1 = Arm Base O.D.
D_2 = Arm End O.D.
L_1 = Shaft Length
L = Nominal Arm Length

① Thickness shown are minimums, thicker materials may be used.

② D_2 may be increased by up to 1" for polygonal arms.

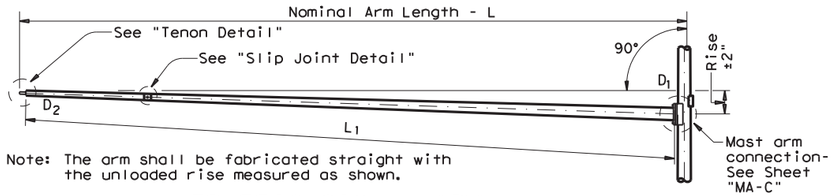

Note: The arm shall be fabricated straight with the unloaded rise measured as shown.

TRAFFIC SIGNAL ARM

(Fixed Mount)

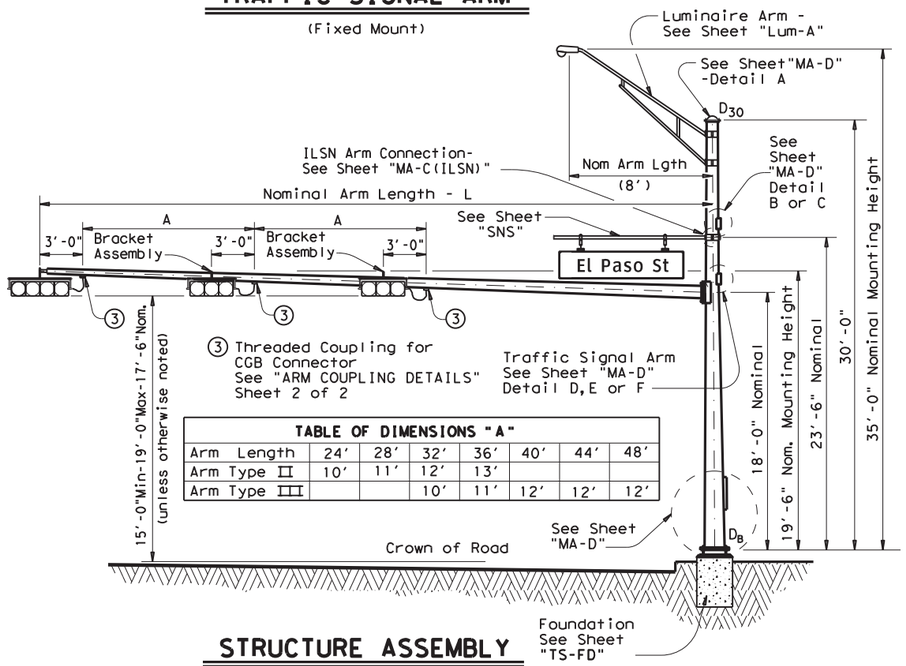

TABLE OF DIMENSIONS "A"

Arm Length	24'	28'	32'	36'	40'	44'	48'
Arm Type II	10'	11'	12'	13'			
Arm Type III			10'	11'	12'	12'	12'

STRUCTURE ASSEMBLY

SHIPPING PARTS LIST

Ship each pole with the following attached: enlarged hand hole, pole cap, fixed-arm connection bolts and washers and any additional hardware listed in the table.

Nominal Arm Length	30' Poles With Luminaire		24' Poles With ILSN		19' Poles With No Luminaire and No ILSN	
	Above hardware plus: One (or two if ILSN attached) small hand hole, clamp-on simplex		Above hardware plus one small hand hole		See note above	
ft	Designation	Quantity	Designation	Quantity	Designation	Quantity
20	20L-80		20S-80		20-80	
24	24L-80	1	24S-80		24-80	6
28	28L-80	1	28S-80		28-80	4
32	32L-80	4	32S-80		32-80	5
36	36L-80	3	36S-80		36-80	5
40	40L-80	6	40S-80		40-80	2
44	44L-80	8	44S-80		44-80	8
48	48L-80	4	48S-80		48-80	5

Traffic Signal Arms (1 per Pole) Ship each arm with the listed equipment attached

Nominal Arm Length	Type I Arm (1 Signal)		Type II Arm (2 Signals)		Type III Arm (3 Signals)	
	1 CGB connector		1 Bracket Assembly and 2 CGB Connectors		2 Bracket Assemblies and 3 CGB Connectors	
ft	Designation	Quantity	Designation	Quantity	Designation	Quantity
20	20I-80					
24	24I-80		24II-80	7		
28	28I-80		28II-80	5		
32			32II-80	7	32III-80	2
36			36II-80	4	36III-80	4
40					40III-80	8
44					44III-80	16
48					48III-80	9

Luminaire Arms (1 per 30' pole)

Nominal Arm Length	Quantity
8' Arm	27

ILSN Arm (Max. 2 per pole) Ship with clamps, bolts and washers

Nominal Arm Length	Quantity
7' Arm	
9' Arm	

Anchor Bolt Assemblies (1 per pole)

Anchor Bolt Diameter	Anchor Bolt Length	Quantity
1 ½"	3'-4"	21
1 ¾"	3'-10"	41

Each anchor bolt assembly consists of the following: Top and Bottom templates, 4 anchor bolts, 8 nuts, 8 flat washers, and 4 nut anchor devices (Type 2) per Standard Drawing "TS-FD".

Templates may be removed for shipment.

SHEET 1 OF 2

STATE OF TEXAS SCOTT R. ARNOLD 95782 LICENSED PROFESSIONAL ENGINEER

Scott R. Arnold, P.E.

12/21/2020

Texas Department of Transportation
Traffic Operations Division

TRAFFIC SIGNAL SUPPORT STRUCTURES

SINGLE MAST ARM ASSEMBLY

(80 MPH WIND ZONE)

SMA-80(1)-12

© TxDOT August 1995

REVISIONS
5-96
11-99
1-12

DN: MS	CK: JSY	DW: MWF	CK: JSY
CONT	SECT	JOB	HIGHWAY
005	15	072	US 84
DIST	COUNTY		SHEET NO.
WAC	MCLENNAN		400

122A

DATE:
FILE:

DISCLAIMER:
The use of this standard is governed by the "Texas Engineering Practice Act". No warranty of any kind is made by TxDOT for any purpose whatsoever. TxDOT assumes no responsibility for the conversion of this standard to other formats or for incorrect results or damages resulting from its use.

DATE:
FILE:

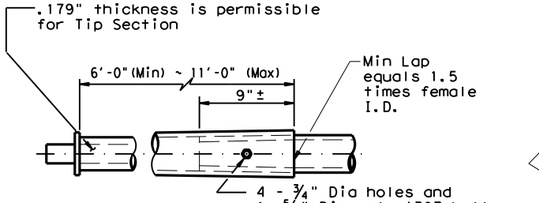

SLIP JOINT DETAIL

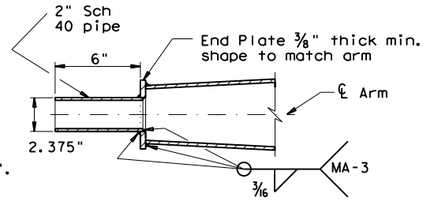

TENON DETAIL

Stainless steel bands (or Cables) and cast bracket as in "Astro-Brac", "Sky Bracket" or "Easy Bracket" with 1 ½" Dia Threaded Coupling.

BRACKET ASSEMBLY

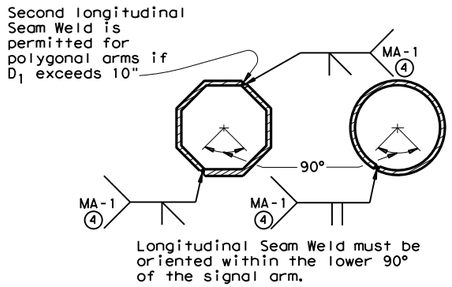

ARM WELD DETAIL

④ 60% Min. penetration 100% pemetration within 6" of circumferential base welds.

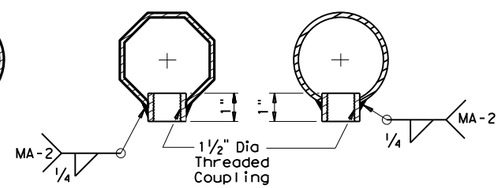

ARM COUPLING DETAILS

VIBRATION WARNING

Mast Arms of SMA and DMA structures and clamp-on Arms of LMA structures of approximately 40 ft or longer are subject to harmonic vertical vibrations in light wind conditions due to the aeroelastic characteristics of a few of the myriads of possible combinations of the following: signal numbers, weights and positions; existence/solidity of backplates; presence of additional attachments to the arm, such as signs and cameras; arm-wind orientation; and arm-pole stiffness.

Such vibrations may cause fatigue damage to the structure and may lead to galloping in moderate wind conditions which may further damage the structure and alarm the public. Tests have indicated that when wind is blowing toward the back side of signal heads having un-vented backplates attached the probability of unacceptable harmonic vibration and/or galloping is rather high.

If backplates are not required for improved visibility they should not be applied to the signal heads or, if they must be applied, they should be vented as a first and inexpensive measure to mitigate vibrations.

The traffic signal mast arms shall be visually inspected in 5 to 20 mph wind conditions after installation of signal heads and any attachments, including any required backpates. If vertical movements with a total excursion (maximum upward excursion to maximum downward excursion) of more than approximately 8" are observed at the arm tip, a damping plate shall be fitted to the arm. See "Damping Plate Mounting Details" on standard sheet, MA-DPD-10.

This visual inspection shall be repeated after each modification of the structure that could affect its aeroelastic response. Excessive vibrations shall not be allowed to continue for more than two days.

GENERAL NOTES:

Design conforms to 1994 AASHTO Standard Specifications for Structural Supports for Highway Signs, Luminaires, and Traffic Signals and Interim Specifications thereto. Design Wind Speed equals 80 mph plus a 1.3 gust factor.

Poles are designed to support one 8'-0" luminaire arm, one 9'-0" internally lighted street name sign and one traffic signal arm with a length as tabulated. The specified luminaire load applied at the end of the luminaire arm equals 60 lbs vertical dead load plus the horizontal wind load on an effective projected area of 1.6 sq ft. The specified internally lighted street name sign load applied 4.5 ft from the centerline of the pole equals 85 lbs vertical dead load plus horizontal wind load on an effective projected area of 11.5 sq ft. The specified signal load applied at the end of the traffic signal arm equals 180 lbs vertical dead load plus the horizontal wind load on an effective projected area of 32.4 sq ft (actual area times drag coefficient).

See Standard Sheet "MA-D" for pole details, "MA-C" for traffic signal arm connection details, "MA-C (ILSN)" for internally lighted street name sign arm connection details, "LUM-A" for luminaire arm and connection details, "SNS" for internally lighted street name sign details, and "TS-FD" for anchor bolt and foundation details. See "MA-C" for material specifications.

Fabrication shall be in accordance with Item 686, "Traffic Signal Pole Assemblies (Steel)" and with the details, dimensions, and weld procedures shown herein. Weld references call for preapproved weld procedures which the Fabricator must obtain prior to fabrication. Materials, fabrication tolerances, and shipping practices shall meet the requirements of this sheet and Item 686, "Traffic Signal Pole Assemblies (Steel)".

Unless otherwise noted, all parts shall be galvanized in accordance with Item 445, "Galvanizing", after fabrication.

Deviation from the details and dimensions shown herein require submission of shop drawings in accordance with Item 441, "Steel Structures". Alternate designs are not acceptable.

Texas Department of Transportation
Traffic Operations Division

TRAFFIC SIGNAL SUPPORT STRUCTURES

SINGLE MAST ARM ASSEMBLY

(80 MPH WIND ZONE)

SMA-80(2)-12

© TxDOT August 1995

DN: MS	CK: JSY	DW: MMF	CK: JSY

REVISIONS
5-96
1-12

CONT	SECT	JOB	HIGHWAY
005	15	072	US 84
DIST	COUNTY		SHEET NO.
WAC	MCLENNAN		401

122B

DISCLAIMER: The use of this standard is governed by the "Texas Engineering Practice Act". No warranty of any kind is made by TxDOT for any purpose whatsoever. TxDOT assumes no responsibility for the conversion of this standard to other formats or for incorrect results or damages resulting from its use.

DATE:
FILE:

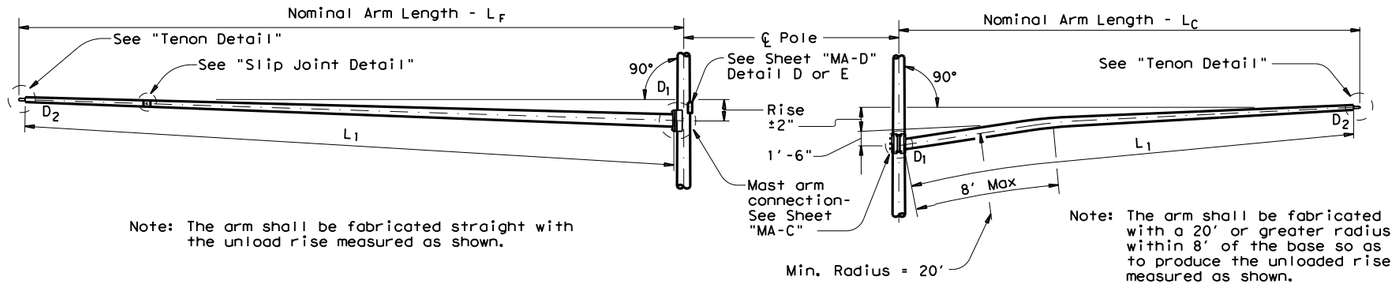

Note: The arm shall be fabricated straight with the unload rise measured as shown.

Note: The arm shall be fabricated with a 20' or greater radius within 8' of the base so as to produce the unloaded rise measured as shown.

FIXED MOUNT TRAFFIC SIGNAL ARM

CLAMP-ON TRAFFIC SIGNAL ARM

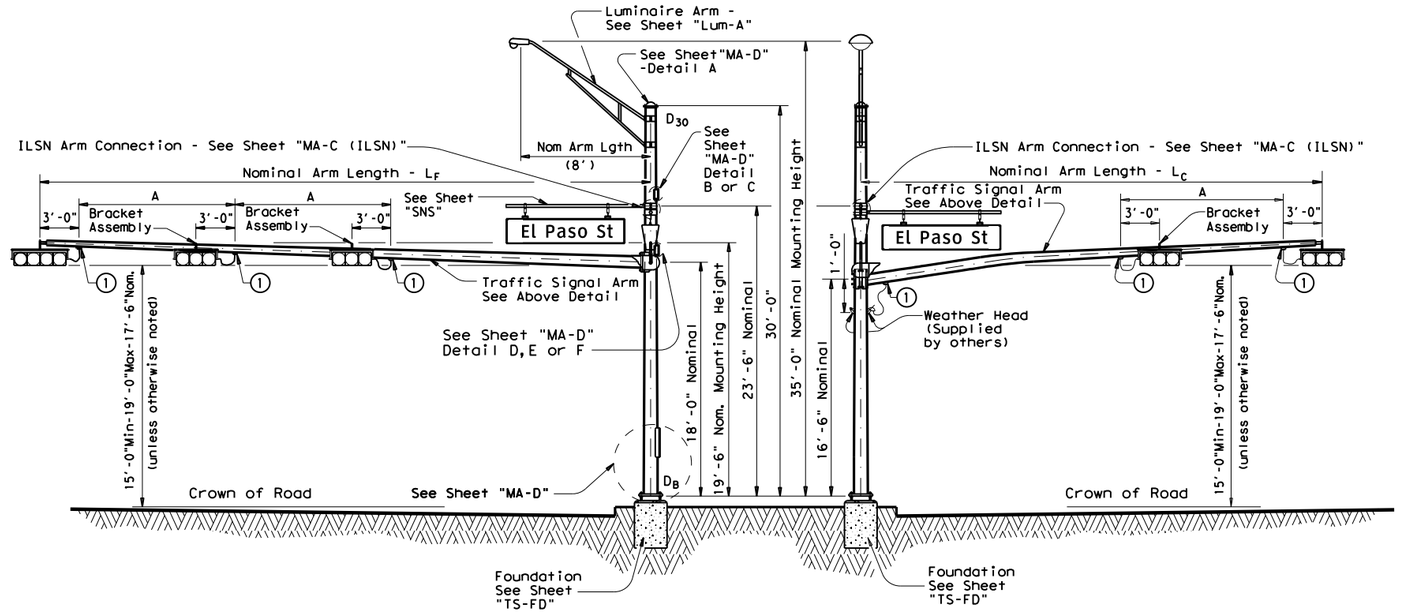

ELEVATION
(Showing fixed mount arm)

STRUCTURE ASSEMBLY
① Threaded Coupling for CGB Connector See "ARM COUPLING DETAILS" Sheet 2 of 3

ELEVATION
(Showing clamp mount arm)

TABLE OF DIMENSIONS "A"						
Arm Length	24'	28'	32'	36'	40'	44'
Arm Type II	10'	11'	12'	13'		
Arm Type III			10'	11'	12'	12'

GENERAL NOTES:

Design conforms to 1994 AASHTO Standard Specifications for Structural Supports for Highway Signs, Luminaires, and Traffic Signals and Interim Specifications thereto. Design Wind Speed equals 80 mph plus a 1.3 gust factor. Designs are based on an arm included angle of 90 degrees or more. Angles of less than approximately 75 degrees will require a special design.

Poles are designed to support one 8'-0" luminaire arm, two 9'-0" internally lighted street name signs and two traffic signal arms with length combinations as tabulated. The specified luminaire load applied at the end of luminaire arm equals 60 lbs vertical dead load plus the horizontal wind load on an effective projected area of 1.6 sq ft. The specified internally lighted street name sign applied 4'-6" from the centerline of the pole equals 85 lbs vertical dead load plus the horizontal wind load on an effective projected area of 11.5 sq ft. The specified signal load applied at the end of the traffic signal arm equals 180 lbs vertical dead load plus the horizontal wind load on an effective projected area of 32.4 sq ft (actual area times drag coefficient).

See Standard Sheet "MA-D" for pole details, "MA-C" for traffic signal arm connection details, "MA-C (ILSN)" for internally lighted street name sign arm connection details, "LUM-A" for luminaire arm and connection details, "SNS" for internally lighted street name sign details, and "TS-FD" for anchor bolt and foundation details. See "MA-C" for material specifications.

Fabrication shall be in accordance with Item 686, "Traffic Signal Pole Assemblies (Steel)" and with the details, dimensions, and weld procedures shown herein. Weld references call for preapproved weld procedures which the Fabricator must obtain prior to fabrication. Materials, fabrication tolerances, and shipping practices shall meet the requirements of this sheet and Item 686, "Traffic Signal Pole Assemblies (Steel)".

Unless otherwise noted, all parts shall be galvanized in accordance with Item 445, "Galvanizing", after fabrication.

Deviation from the details and dimensions shown herein require submission of shop drawings in accordance with Item 441, "Steel Structures". Alternate designs are not acceptable.

Texas Department of Transportation
Traffic Operations Division

TRAFFIC SIGNAL SUPPORT STRUCTURES

DUAL MAST ARM ASSEMBLY

(80 MPH WIND ZONE)

DMA-80 (1)-12

© TxDOT August 1995

REVISIONS	DN: MS	CK: JSY	DW: MMF	CK: JSY
5-96 1-12	CONT	SECT	JOB	HIGHWAY
	0055	15	072	US 84
	DIST	COUNTY		SHEET NO.
	WAC	MCLENNAN		402

124A

DISCLAIMER:
The use of this standard is governed by the "Texas Engineering Practice Act". No warranty of any kind is made by TxDOT for any purpose whatsoever. TxDOT assumes no responsibility for the conversion of this standard to other formats or for incorrect results or damages resulting from its use.

DATE:
FILE:

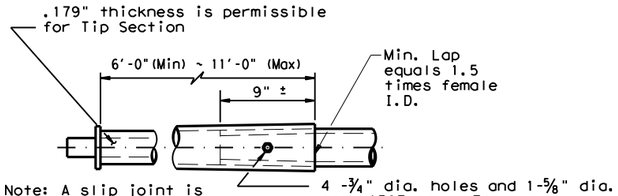

SLIP JOINT DETAIL

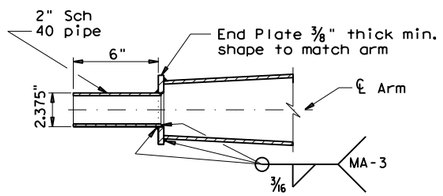

TENON DETAIL

Stainless steel bands (or Cables) and cast bracket as in "Astro-Brac", "Sky Bracket" or "Easy Bracket" with 1 ½" Dia Threaded Coupling.

BRACKET ASSEMBLY

VIBRATION WARNING

Mast Arms of SMA and DMA structures and clamp-on Arms of LMA structures of approximately 40 ft or longer are subject to harmonic vertical vibrations in light wind conditions due to the aeroelastic characteristics of a few of the myriads of possible combinations of the following: signal numbers, weights and positions; existence/solidity of backplates; presence of additional attachments to the arm, such as signs and cameras; arm-wind orientation; and arm-pole stiffness.

Such vibrations may cause fatigue damage to the structure and may lead to galloping in moderate wind conditions which may further damage the structure and alarm the public. Tests have indicated that when wind is blowing toward the back side of signal heads having un-vented backplates attached the probability of unacceptable harmonic vibration and/or galloping is rather high.

If backplates are not required for improved visibility they should not be applied to the signal heads or, if they must be applied, they should be vented as a first and inexpensive measure to mitigate vibrations.

The traffic signal mast arms shall be visually inspected in 5 to 20 mph wind conditions after installation of signal heads and any attachments, including any required backpates. If vertical movements with a total excursion (maximum upward excursion to maximum downward excursion) of more than approximately 8" are observed at the arm tip, a damping plate shall be fitted to the arm. See "Damping Plate Mounting Details" on standard sheet, MA-DPD-10.

This visual inspection shall be repeated after each modification of the structure that could affect its aeroelastic response. Excessive vibrations shall not be allowed to continue for more than two days.

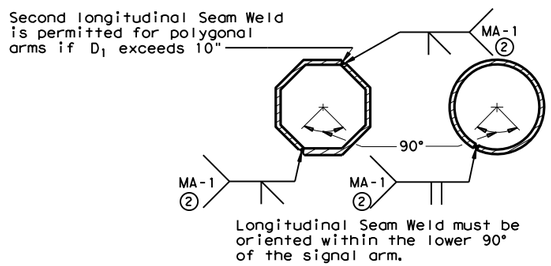

ARM WELD DETAIL

②60% Min. penetration
100% pemetration within 6" of circumferential base welds.

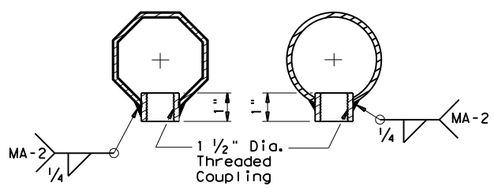

ARM COUPLING DETAILS

SHEET 2 OF 3

Texas Department of Transportation
Traffic Operations Division

TRAFFIC SIGNAL SUPPORT STRUCTURES

DUAL MAST ARM ASSEMBLY

(80 MPH WIND ZONE)

DMA-80 (2)-12

© TxDOT August 1995

DN: MS	CK: JSY	DW: MMF	CK: JSY

REVISIONS
5-96
1-12

CONT	SECT	JOB	HIGHWAY
005	515	072	US 84
DIST	COUNTY		SHEET NO.
WAC	MCLENNAN		403

124B

DISCLAIMER: The use of this standard is governed by the "Texas Engineering Practice Act". No warranty of any kind is made by TxDOT for any purpose whatsoever. TxDOT assumes no responsibility for the conversion of this standard to other formats or for incorrect results or damages resulting from its use.

DATE: 12/21/2020 4:42:55 PM
FILE: c:\pwworking\kha\pwprod\amber.hoffmann\d0110422\dma-80(3).dgn

SHIPPING PARTS LIST

Ship each pole with the following attached: enlarged hand hole, pole cap, fixed arm connection bolts and washers and any additional hardware listed in the table.

Nominal Arm Length		30' Poles With Luminaire		24' Poles With ILSN		19' Poles With no Luminaire and no ILSN	
		See note above plus: one (or two if ILSN attached) small hand hole, clamp-on simplex		See note above plus one small hand hole		See note above	
LF	Lc						
ft.	ft.	Designation	Quantity	Designation	Quantity	Designation	Quantity
20	20	2020L-80		2020S-80		2020-80	
24	20	2420L-80		2420S-80		2420-80	
	24	2424L-80		2424S-80		2424-80	
28	20	2820L-80		2820S-80		2820-80	
	24	2824L-80		2824S-80		2824-80	
	28	2828L-80		2828S-80		2828-80	1
32	20	3220L-80		3220S-80		3220-80	
	24	3224L-80		3224S-80		3224-80	
	28	3228L-80		3228S-80		3228-80	
	32	3232L-80		3232S-80		3232-80	
36	20	3620L-80		3620S-80		3620-80	
	24	3624L-80		3624S-80		3624-80	
	28	3628L-80		3628S-80		3628-80	
	32	3632L-80		3632S-80		3632-80	
	36	3636L-80		3636S-80		3636-80	
40	20	4020L-80		4020S-80		4020-80	
	24	4024L-80		4024S-80		4024-80	
	28	4028L-80		4028S-80		4028-80	
	32	4032L-80		4032S-80		4032-80	
	36	4036L-80		4036S-80		4036-80	
44	20	4420L-80		4420S-80		4420-80	
	24	4424L-80		4424S-80		4424-80	
	28	4428L-80		4428S-80		4428-80	
	32	4432L-80		4432S-80		4432-80	
	36	4436L-80		4436S-80		4436-80	

Traffic Signal Arms (Fixed Mount) (1 per pole) Ship each arm w/ the listed equipment attached

Nominal Arm Length	Type I Arm (1 Signal)		Type II Arm (2 Signals)		Type III Arm (3 Signals)	
	1 CGB connector		1 Bracket Assembly and 2 CGB Connectors		2 Bracket Assemblies and 3 CGB Connectors	
ft.	Designation	Quantity	Designation	Quantity	Designation	Quantity
20	20I-80					
24	24I-80		24II-80			
28	28I-80		28II-80	1		
32			32II-80		32III-80	
36			36II-80		36III-80	
40					40III-80	
44					44III-80	

Traffic Signal Arms (Clamp-On Mount) (1 per pole) Ship each arm w/ the listed equipment attached

Nominal Arm Length	Type I Arm (1 Signal)		Type II Arm (2 Signals)		Type III Arm (3 Signals)	
	2 CGB connector and 1 clamp w/bolts and washers		1 Bracket Assembly, 3 CGB Connectors, and 1 clamp w/bolts and washers		2 Bracket Assemblies, 4 CGB Connectors, and 1 clamp w/bolts and washers	
ft.	Designation	Quantity	Designation	Quantity	Designation	Quantity
20	20I-80					
24	24I-80		24II-80			
28	28I-80		28II-80	1		
32			32II-80		32III-80	
36			36II-80		36III-80	

Luminaire Arms (1 per 30' pole)

Nominal Arm Length	Quantity
8' Arm	

ILSN Arm (1 or 2 per pole) ship with clamps, bolts and washers

Nominal Arm Length	Quantity
7' Arm	
9' Arm	

Anchor Bolt Assemblies (1 per pole)

Anchor Bolt Diameter	Anchor Bolt Length	Quantity
1 1/2"	3'-4"	1
1 3/4"	3'-10"	
2"	4'-3"	

Each anchor bolt assembly consists of the following: Top and Bottom templates, 4 anchor bolts, 8 nuts, 8 flat washers, and 4 nut anchor devices (Type 2) per Standard Drawing "TS-FD".

Templates may be removed for shipment.

ARMS		ROUND POLES					POLYGONAL POLES					Foundation Type
LF	Lc	D_B	D_{19}	D_{24}	D_{30}	③ thk	D_B	D_{19}	D_{24}	D_{30}	③ thk	
ft.	ft.	in.	in.	in.	in.	in.	in.	in.	in.	in.	in.	
20	20	11.5	8.8	8.1	7.3	.179	12.5	9.5	8.7	7.8	.179	30-A
24	20	12.0	9.3	8.6	7.8	.179	13.0	10.0	9.2	8.3	.179	30-A
	24	12.0	9.3	8.6	7.8	.179	13.0	10.0	9.2	8.3	.239	30-A
28	20	12.5	9.8	9.1	8.3	.179	12.0	9.0	8.2	7.3	.239	30-A
	24	12.5	9.8	9.1	8.3	.179	12.0	9.0	8.2	7.3	.239	30-A
	28	13.0	10.3	9.6	8.8	.179	12.5	9.5	8.7	7.8	.239	30-A
32	20	13.0	10.3	9.6	8.8	.179	12.5	9.5	8.7	7.8	.239	30-A
	24	13.0	10.3	9.6	8.8	.179	12.5	9.5	8.7	7.8	.239	30-A
	28	12.0	9.3	8.6	7.8	.239	13.0	10.0	9.2	8.3	.239	30-A
	32	12.0	9.3	8.6	7.8	.239	13.5	10.5	9.7	8.8	.239	36-A
36	20	12.0	9.3	8.6	7.8	.239	13.5	10.5	9.7	8.8	.239	36-A
	24	12.0	9.3	8.6	7.8	.239	13.5	10.5	9.7	8.8	.239	36-A
	28	12.5	9.8	9.1	8.3	.239	13.5	10.5	9.7	8.8	.239	36-A
	32	12.5	9.8	9.1	8.3	.239	13.5	10.5	9.7	8.8	.239	36-A
	36	12.5	9.8	9.1	8.3	.239	14.0	11.0	10.2	9.3	.239	36-A
40	20	12.5	9.8	9.1	8.3	.239	14.0	11.0	10.2	9.3	.239	36-A
	24	12.5	9.8	9.1	8.3	.239	14.0	11.0	10.2	9.3	.239	36-A
	28	13.0	10.3	9.6	8.8	.239	14.0	11.0	10.2	9.3	.239	36-A
	32	13.0	10.3	9.6	8.8	.239	15.0	12.0	11.2	10.3	.239	36-A
	36	13.5	10.8	10.1	9.3	.239	15.0	12.0	11.2	10.3	.239	36-A
44	20	13.5	10.8	10.1	9.3	.239	15.0	12.0	11.2	10.3	.239	36-A
	24	13.5	10.8	10.1	9.3	.239	15.0	12.0	11.2	10.3	.239	36-A
	28	13.5	10.8	10.1	9.3	.239	15.0	12.0	11.2	10.3	.239	36-A
	32	14.0	11.3	10.6	9.8	.239	15.5	12.5	11.7	10.8	.239	36-B
	36	14.0	11.3	10.6	9.8	.239	15.5	12.5	11.7	10.8	.239	36-B

Arm L_F or L_C	ROUND ARMS					POLYGONAL ARMS				
	L_1	D_1	D_2	③ thk	Rise	L_1	D_1	④ D_2	③ thk	Rise
ft.	ft.	in.	in.	in.		ft.	in.	in.	in.	
20	19.1	6.5	3.8	.179	1'-9"	19.1	7.0	3.5	.179	1'-8"
24	23.1	7.5	4.3	.179	1'-10"	23.1	7.5	3.5	.179	1'-9"
28	27.1	8.0	4.2	.179	1'-11"	27.1	8.0	3.5	.179	1'-10"
32	31.0	9.0	4.7	.179	2'-1"	31.0	9.0	3.5	.179	2'-0"
36	35.0	9.5	4.6	.179	2'-4"	35.0	10.0	3.5	.179	2'-1"
40	39.0	9.5	4.1	.239	2'-8"	39.0	9.5	3.5	.239	2'-3"
44	43.0	10.0	4.1	.239	2'-11"	43.0	10.0	3.5	.239	2'-6"

D_B = Pole Base O.D.
D_{19} = Pole Top O.D. with no Luminaire and no ILSN
D_{24} = Pole Top O.D. with ILSN w/out Luminaire
D_{30} = Pole Top O.D. with Luminaire

D_1 = Arm Base O.D.
D_2 = Arm End O.D.
L_1 = Shaft Length
L_F = Fixed Arm Length
L_C = Clamp-on Arm Length (36' Max)

③ Thickness shown are minimums, thicker materials may be used.

④ D_2 may be increased by up to 1.0" for polygonal arms.

Texas Department of Transportation
Traffic Operations Division

TRAFFIC SIGNAL SUPPORT STRUCTURES

DUAL MAST ARM ASSEMBLY

(80 MPH WIND ZONE)

DMA-80 (3)-12

STATE OF TEXAS · SCOTT R. ARNOLD · 96782 · LICENSED · PROFESSIONAL ENGINEER

Scott R. Arnold, P.E.
12/21/2020

© TxDOT August 1995

DN: MS	CK: JSY	DW: MMF	CK: JSY

REVISIONS
5-96
1-12

CONT	SECT	JOB	HIGHWAY
0055	15	072	US 84
DIST	COUNTY		SHEET NO.
WAC	MCLENNAN		404

124C

DISCLAIMER: The use of this standard is governed by the "Texas Engineering Practice Act". No warranty of any kind is made by TxDOT for any purpose whatsoever. TxDOT assumes no responsibility for the conversion of this standard to other formats or for incorrect results or damages resulting from its use.

DATE:
FILE:

ARM SIZE D_1	ARM SIZE ǂ	A	B	C	D	E	CONN BOLT DIA
in.	in.	in.	in.	in.	in.	in.	in.
6.5	.179	12	9	9	6	1 3/4	1
7.5	.179	13	9	10	6	1 3/4	1
8.0	.179	14	10	11	7	2	1 1/4
9.0	.179	16	11	13	8	2	1 1/4
9.5	.179	17	12	14	9	2	1 1/4
9.5	.239	18	12	15	9	2	1 1/4
10.0	.239	18	12	15	9	2	1 1/4
10.5	.239	18	13	15	10	3	1 1/2
11.0	.239	18	13	15	10	3	1 1/2

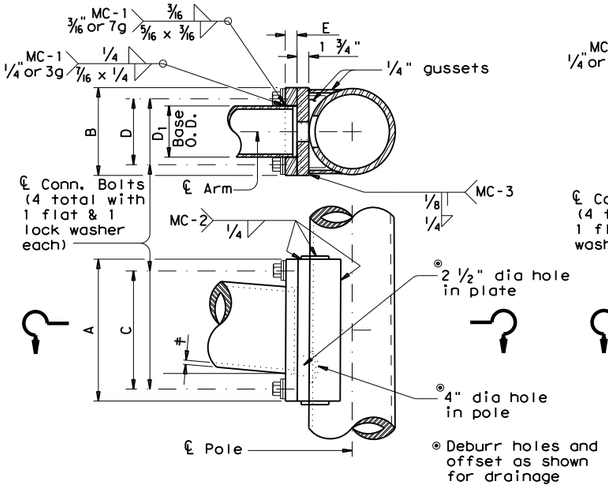

FIXED MOUNT DETAIL 1

ARM SIZE D_1	ARM SIZE ǂ	A	F	CONN. BOLTS No.	CONN. BOLTS Dia	PIN BOLTS No.	PIN BOLTS Dia
in.	in.	in.	in.	ea.	in.	ea.	in.
6.5	.179	12	6	4	1	2	5/8
7.5	.179	14	8	4	1	2	5/8
8.0	.179	14	8	4	1	2	5/8
9.0	.179	16	10	4	1	2	5/8
9.5	.179	18	12	4	1 1/4	3	5/8
9.5	.239	18	12	4	1 1/4	3	5/8
10.0	.239	18	12	4	1 1/4	3	5/8

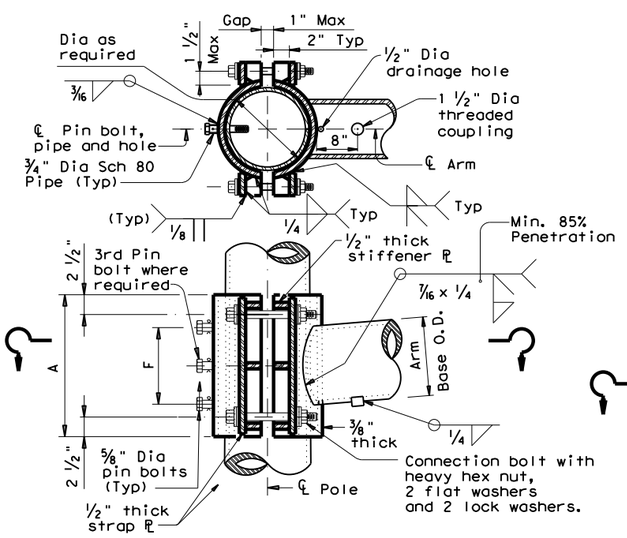

CLAMP-ON DETAIL 1

ARM SIZE D_1	ARM SIZE ǂ	A	F	T	CONN. BOLTS No.	CONN. BOLTS Dia	PIN BOLTS No.	PIN BOLTS Dia
in.	in.	in.	in.	in.	ea.	in.	ea.	in.
7.0	.179	12	6	3/4	4	3/4	2	5/8
7.5	.179	14	8	3/4	4	3/4	2	5/8
8.0	.179	14	8	3/4	4	3/4	2	5/8
9.0	.179	16	10	7/8	4	1	2	5/8
10.0	.179	18	10	7/8	4	1	2	5/8
9.5	.239	18	10	1	6	1	3	5/8
10.0	.239	18	10	1	6	1	3	5/8

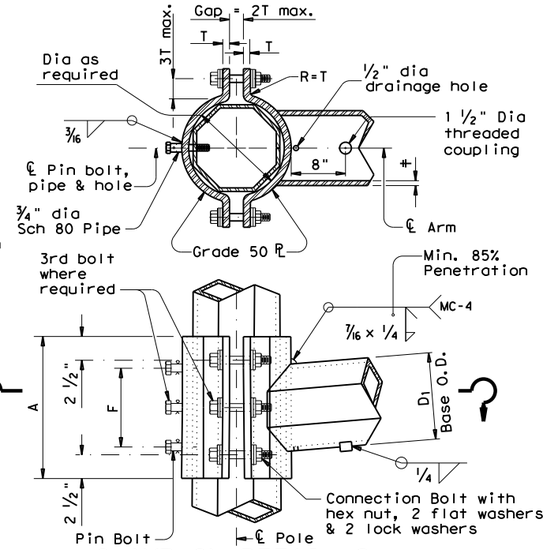

CLAMP-ON DETAIL 2

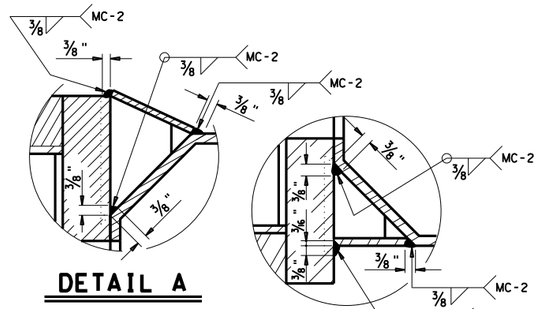

DETAIL A

DETAIL B

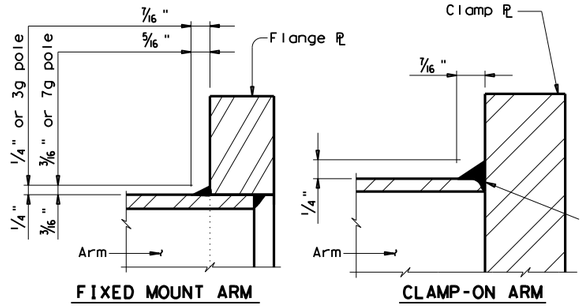

ARM BASE WELD DETAILS

ARM SIZE D_1	ARM SIZE ǂ	A	F	CONN. BOLTS No.	CONN. BOLTS Dia	PIN BOLTS No.	PIN BOLTS Dia
in.	in.	in.	in.	ea.	in.	ea.	in.
6.5	.179	12	6	4	1	2	5/8
7.5	.179	14	8	4	1	2	5/8
8.0	.179	14	8	4	1	2	5/8
9.0	.179	16	10	4	1	2	5/8
9.5	.179	18	12	6	1	3	5/8
9.5	.239	18	12	6	1	3	5/8
10.0	.239	18	12	6	1	3	5/8

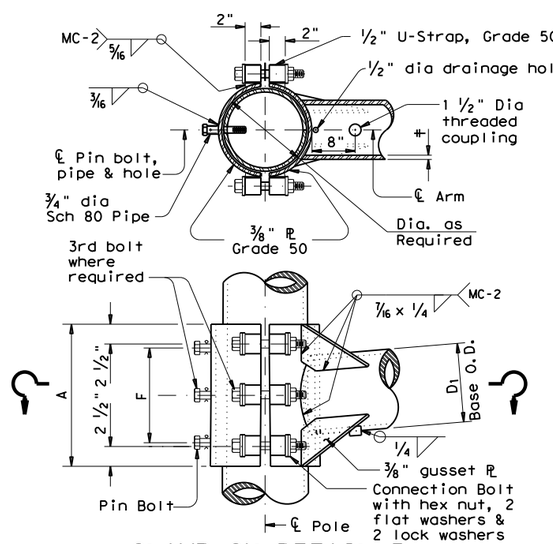

ARM BASE WELD DETAILS

MATERIALS	
Round Shafts or Polygonal Shafts ①	ASTM A595 Gr.A, A588, A1008 HSLAS Gr.50 Class 2, A1011 HSLAS Gr.50 Class 2, A572 Gr.50 or A1011 SS Gr.50 ②
Plates ①	ASTM A36, A588, or A572 Gr.50
Connection Bolts	ASTM A325 or A449, except where noted
Pin Bolts	ASTM A325
Pipe ①	ASTM A53 Gr.B, A501, A1008 HSLAS-F Gr.50, A1011 HSLAS-F Gr.50
Misc. Hardware	Galvanized steel or stainless steel or as noted

① ASTM A572, A1008 HSLAS, A1011 HSLAS, A1008 HSLAS-F, A1011 HSLAS-F or A1011 SS may have higher yield strengths but shall not have less elongation than the grade indicated.

② ASTM A1011 SS Gr.50 material shall also have a minimum elongation of 18 percent in 8 inches or 23 percent in 2 inches. Material thickness in excess of those stipulated under A1011 SS will be acceptable providing the material meets all other A1011 SS requirements and the requirements of this item.

GENERAL NOTES:

Clamp-on details are used for the second arm on dual mast arm assemblies. A Maximum 1 1/2" wide vertical slotted hole shall be cut in the front clamp plate to facilitate drainage during galvanizing. The slot shall be centered behind the arm and shall be no longer than the arm diameter minus 1"

Fixed mount details are used for single mast arm assemblies and for the first arm on dual mast arm assemblies.

Where duplicate parts occur on a detail, welds shown for one part shall apply to all similar parts on the detail.

Pin bolts are required to prevent rotation of clamp-on arms under design wind forces.

NOTE:

Pin bolts shall be A325 with threads excluded from the shear plane. Pin bolt and 3/4" dia pipe shall have 9/16" dia holes for a 1/8" dia galvanized cotter pin. Back clamp plate shall be furnished with a 3/4" dia hole for each pin bolt. An 11/16" dia hole for each pin bolt shall be field drilled through the pole after arm orientations have been approved by the Engineer.

Texas Department of Transportation
Traffic Operations Division

STANDARD ASSEMBLY FOR TRAFFIC SIGNAL SUPPORT STRUCTURES

MAST ARM CONNECTIONS

MA-C-12

© TxDOT August 1995

DN: MS	CK: JSY	DW: MMF	CK: JSY

REVISIONS
5-96
5-09
1-12

CONT	SECT	JOB	HIGHWAY
005	515	072	US 84
DIST	COUNTY		SHEET NO.
WAC	MCLENNAN		405

126A

DISCLAIMER: The use of this standard is governed by the "Texas Engineering Practice Act". No warranty of any kind is made by TxDOT for any purpose whatsoever. TxDOT assumes no responsibility for the conversion of this standard to other formats or for incorrect results or damages resulting from its use.

DATE:
FILE:

FOUNDATION DESIGN TABLE

FDN TYPE	DRILLED SHAFT DIA	REINFORCING STEEL		EMBEDDED DRILLED SHAFT LENGTH-ft ④, ⑤, ⑥			ANCHOR BOLT DESIGN ①				FOUNDATION DESIGN LOAD ②		TYPICAL APPLICATION
		VERT BARS	SPIRAL & PITCH	TEXAS CONE PENETROMETER N blows/ft 10	15	40	ANCHOR BOLT DIA	Fy (ksi)	BOLT CIR DIA	ANCHOR TYPE	MOMENT K-ft	SHEAR Kips	
24-A	24"	4- #5	#2 at 12"	5.7	5.3	4.5	¾"	36	12 ¾"	1	10	1	Pedestal pole, pedestal mounted controller.
30-A	30"	8- #9	#3 at 6"	11.3	10.3	8.0	1 ½"	55	17"	2	87	3	Mast arm assembly. (see Selection Table)
36-A	36"	10- #9	#3 at 6"	13.2	12.0	9.4	1 ¾"	55	19"	2	131	5	Mast arm assembly. (see Selection Table) 30' strain pole with or without luminaire.
36-B	36"	12- #9	#3 at 6"	15.2	13.6	10.4	2"	55	21"	2	190	7	Mast arm assembly. (see Selection Table) Strain pole taller than 30' & strain pole with mast arm
42-A	42"	14- #9	#3 at 6"	17.4	15.6	11.9	2 ¼"	55	23"	2	271	9	Mast arm assembly. (see Selection Table)

FOUNDATION SELECTION TABLE FOR STANDARD MAST ARM PLUS ILSN SUPPORT ASSEMBLIES (ft)

		FDN 30-A	FDN 36-A	FDN 36-B	FDN 42-A
80 MPH DESIGN WIND SPEED	MAX SINGLE ARM LENGTH	32'	48'		
	MAXIMUM DOUBLE ARM LENGTH COMBINATIONS	24' X 24'			
		28' X 28'			
		32' X 28'	32' X 32'		
			36' X 36'		
			40' X 36'		
			44' X 28'	44' X 36'	
100 MPH DESIGN WIND SPEED	MAX SINGLE ARM LENGTH		36'	44'	
	MAXIMUM DOUBLE ARM LENGTH COMBINATIONS		24' X 24'		
			28' X 28'		
			32' X 24'	32' X 32'	
				36' X 36'	
				40' x24'	40' X 36'
					44' x 36'

EXAMPLE:
1. For 80mph design wind speed, foundation 30-A can support up to a 32' arm with another arm up to 28'
2. For 100mph design wind speed, foundation 36-A can support a single 36' mast arm.

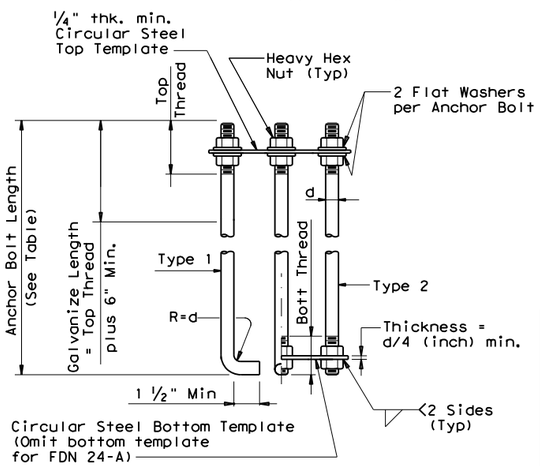

HOOKED ANCHOR (TYPE 1) NUT ANCHOR (TYPE 2)

ANCHOR BOLT ASSEMBLY

⑧ Orient anchor bolts orthogonal with the fixed arm direction to ensure that two bolts are in tension under dead load.

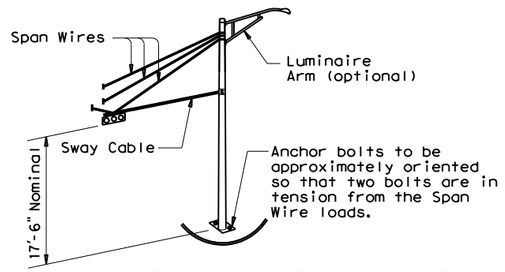

TYPICAL STRAIN POLE ASSEMBLY

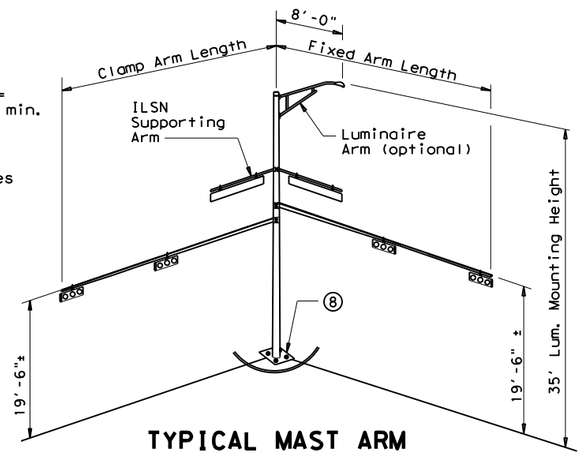

TYPICAL MAST ARM ASSEMBLY

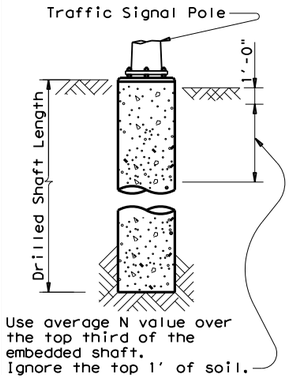

Use average N value over the top third of the embedded shaft. Ignore the top 1' of soil.

NOTES:

① Anchor bolt design develops the foundation capacity given under Foundation Design Loads.

② Foundation Design Loads are the allowable moments and shears at the base of the structure.

③ Foundations may be listed separately or grouped according to similarity of location and type. Quantities are for the Contractor's information only.

④ Field Penetrometer readings at a depth of approximately 3 to 5 feet may be used to adjust shaft lengths.

⑤ If rock is encountered, the Drilled Shaft shall extend a minimum of two diameters into solid rock.

⑥ Decimal lengths in Design Table are to allow interpolation for other penetrometer values. Round to nearest foot for entry into Summary Table.

ANCHOR BOLT & TEMPLATE SIZES						
BOLT DIA IN.	⑦ BOLT LENGTH	TOP THREAD	BOTTOM THREAD	BOLT CIRCLE	R2	R1
¾"	1'-6"	3"	—	12 ¾"	7 ⅛"	5 ⅝"
1 ½"	3'-4"	6"	4"	17"	10"	7"
1 ¾"	3'-10"	7"	4 ½"	19"	11 ¼"	7 ¾"
2"	4'-3"	8"	5"	21"	12 ½"	8 ½"
2 ¼"	4'-9"	9"	5 ½"	23"	13 ¾"	9 ¼"

⑦ Min dimensions given, longer bolts are acceptable.

TOP VIEW

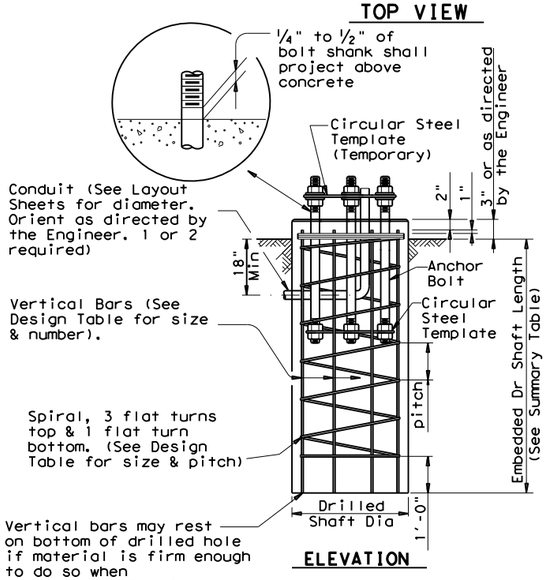

ELEVATION

FOUNDATION DETAILS

FOUNDATION SUMMARY TABLE ③

LOCATION IDENTIFICATION	AVG. N BLOW /ft.	FDN TYPE	NO. EA	DRILLED SHAFT LENGTH ⑥ (FEET) 24-A	30-A	36-A	36-B	42-A
CENTERPOINT								
PED POLE A, B	10	24-A	2	11.4				
MAST ARM D	10	36-A	1			13.2		
LAKE AIR								
PED POLE A, B, C, D, E, F	10	24-A	6	34.2				
MAST ARM B, D	10	30-A	2		22.6			
TOWN OAKS								
PED POLE A, B, C, D	10	24-A	4	22.8				
MAST ARM D	10	30-A	1		11.3			
MAST ARM B	10	36-A	1			13.2		
SUN VALLEY								
PED POLE A, B, C	10	24-A	3	17.1				
MAST ARM B, D	10	36-A	2			26.4		
NORTH NEW								
PED POLE A, B, D, E	10	24-A	4	22.8				
VALLEY MILLS								
PED POLE A, B, C	10	24-A	3	17.1				
38TH								
PED POLE A, B, C, D	10	24-A	4	22.8				
MAST ARM A, B, C	10	36-A	3			39.6		
MAST ARM D	10	30-A	1		11.3			
TOTAL DRILLED SHAFT LENGTHS				148.2	45.2	92.4		

*24A IS SUBSIDIARY TO ITEMS:
687 6001 PED POLE ASSEMBLY
687 6002 PEDESTRIAN PUSH BUTTON POLE

GENERAL NOTES:

Design conforms to 1994 AASHTO Standard Specifications for Structural Supports forHighway Signs, Luminaires and Traffic Signals and interim revisions thereto.

Reinforcing steel shall conform to Item 440,"Reinforcing Steel".

Concrete shall be Class "C".

Threads for anchor bolts and nuts shall be rolled or cut threads of 8UN series up to 2"in diameter or UNC series for all sizes. Bolts and nuts shall have Class 2A and 2B fit tolerances. Galvanized nuts shall be tapped after galvanizing.

Anchor bolts that are larger than 1" in diameter shall conform to "alloy steel" or "medium-strength mild steel" per Item 449, "Anchor Bolts". Anchor bolts that are 1" in diameter or less shall conform to ASTM A36. Galvanize a minimum of the top end thread length plus 6" for all anchor bolts unless otherwise noted. Exposed washers and exposed nuts shall be galvanized. All galvanizing shall be in accordance with Item 445, "Galvanizing".

Templates and embedded nuts need not be galvanized. Lubricate and tighten anchor bolts when erecting the structure in accordance with Item 449, "Anchor Bolts".

STATE OF TEXAS SCOTT R. ARNOLD 96782 LICENSED PROFESSIONAL ENGINEER

Scott R. Arnold, P.E.
12/21/2020

Texas Department of Transportation
Traffic Operations Division

TRAFFIC SIGNAL POLE FOUNDATION

SHEET 1 OF 4

TS-FD-12

© TxDOT August 1995

REVISIONS	DN: MS	CK: JSY	DW: MAO/MMF	CK: JSY/TEB
5-96 11-98 1-12	CONT	SECT	JOB	HIGHWAY
	0055	15	072	US 84
	DIST	COUNTY		SHEET NO.
	WAC	MCLENNAN		406

DISCLAIMER: The use of this standard is governed by the "Texas Engineering Practice Act". No warranty of any kind is made by TxDOT for any purpose whatsoever. TxDOT assumes no responsibility for the conversion of this standard to other formats or for incorrect results or damages resulting from its use.

DATE:
FILE:

FOUNDATION DESIGN TABLE

FDN TYPE	DRILLED SHAFT DIA	REINFORCING STEEL		EMBEDDED DRILLED SHAFT LENGTH-ft ④, ⑤, ⑥			ANCHOR BOLT DESIGN ①				FOUNDATION DESIGN LOAD ②		TYPICAL APPLICATION
		VERT BARS	SPIRAL & PITCH	TEXAS CONE PENETROMETER N blows/ft 10	15	40	ANCHOR BOLT DIA	Fy (ksi)	BOLT CIR DIA	ANCHOR TYPE	MOMENT K-ft	SHEAR Kips	
24-A	24"	4- #5	#2 at 12"	5.7	5.3	4.5	¾"	36	12 ¾"	1	10	1	Pedestal pole, pedestal mounted controller.
30-A	30"	8- #9	#3 at 6"	11.3	10.3	8.0	1 ½"	55	17"	2	87	3	Mast arm assembly. (see Selection Table)
36-A	36"	10- #9	#3 at 6"	13.2	12.0	9.4	1 ¾"	55	19"	2	131	5	Mast arm assembly. (see Selection Table) 30' strain pole with or without luminaire.
36-B	36"	12- #9	#3 at 6"	15.2	13.6	10.4	2"	55	21"	2	190	7	Mast arm assembly. (see Selection Table) Strain pole taller than 30' & strain pole with mast arm
42-A	42"	14- #9	#3 at 6"	17.4	15.6	11.9	2 ¼"	55	23"	2	271	9	Mast arm assembly. (see Selection Table)

NOTES:

① Anchor bolt design develops the foundation capacity given under Foundation Design Loads.

② Foundation Design Loads are the allowable moments and shears at the base of the structure.

③ Foundations may be listed separately or grouped according to similarity of location and type. Quantities are for the Contractor's information only.

④ Field Penetrometer readings at a depth of approximately 3 to 5 feet may be used to adjust shaft lengths.

⑤ If rock is encountered, the Drilled Shaft shall extend a minimum of two diameters into solid rock.

⑥ Decimal lengths in Design Table are to allow interpolation for other penetrometer values. Round to nearest foot for entry into Summary Table.

FOUNDATION SUMMARY TABLE ③

LOCATION IDENTIFICATION	AVG. N BLOW /ft.	FDN TYPE	NO. EA	DRILLED SHAFT LENGTH ⑥ (FEET) 24-A	30-A	36-A	36-B	42-A
36TH								
PED POLE A, B, C	10	24-A	3	17.1				
MAST ARM B, D	10	30-A	2		22.6			
MAST ARM A, C	10	36-A	2			26.4		
29TH								
PED POLE A, B, C	10	24-A	3	17.1				
MAST ARM D	10	30-A	1		11.3			
MAST ARM A, B, C	10	36-A	3			39.6		
26TH								
PED POLE B	10	24-A	1	5.7				
MAST ARM A, B, C	10	36-A	3			39.6		
25TH								
PED POLE A, B	10	24-A	2	11.4				
MAST ARM A	10	30-A	1		11.3			
MAST ARM B, C	10	36-A	2			26.4		
18TH								
PED POLE A, B, C, D	10	24-A	4	22.8				
MAST ARM B	10	30-A	1		11.3			
MAST ARM A	10	36-A	1			13.2		
TOTAL DRILLED SHAFT LENGTHS				74.1	56.5	145.2		

*24A IS SUBSIDIARY TO ITEMS:
687 6001 PED POLE ASSEMBLY
687 6002 PEDESTRIAN PUSH BUTTON POLE

FOUNDATION SELECTION TABLE FOR STANDARD MAST ARM PLUS ILSN SUPPORT ASSEMBLIES (ft)

		FDN 30-A	FDN 36-A	FDN 36-B	FDN 42-A
80 MPH DESIGN WIND SPEED	MAX SINGLE ARM LENGTH	32'	48'		
	MAXIMUM DOUBLE ARM LENGTH COMBINATIONS	24' X 24'			
		28' X 28'			
		32' X 28'	32' X 32'		
			36' X 36'		
			40' X 36'		
			44' X 28'	44' X 36'	
100 MPH DESIGN WIND SPEED	MAX SINGLE ARM LENGTH		36'	44'	
	MAXIMUM DOUBLE ARM LENGTH COMBINATIONS		24' X 24'		
			28' X 28'		
			32' X 24'	32' X 32'	
				36' X 36'	
				40' x24'	40' X 36'
					44' x 36'

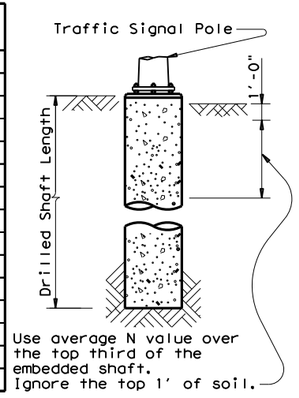

Use average N value over the top third of the embedded shaft. Ignore the top 1' of soil.

ANCHOR BOLT & TEMPLATE SIZES

BOLT DIA IN.	⑦ BOLT LENGTH	TOP THREAD	BOTTOM THREAD	BOLT CIRCLE	R2	R1
¾"	1'-6"	3"	—	12 ¾"	7 ⅛"	5 ⅝"
1 ½"	3'-4"	6"	4"	17"	10"	7"
1 ¾"	3'-10"	7"	4 ½"	19"	11 ¼"	7 ¾"
2"	4'-3"	8"	5"	21"	12 ½"	8 ½"
2 ¼"	4'-9"	9"	5 ½"	23"	13 ¾"	9 ¼"

⑦ Min dimensions given, longer bolts are acceptable.

EXAMPLE:
1. For 80mph design wind speed, foundation 30-A can support up to a 32' arm with another arm up to 28'
2. For 100mph design wind speed, foundation 36-A can support a single 36' mast arm.

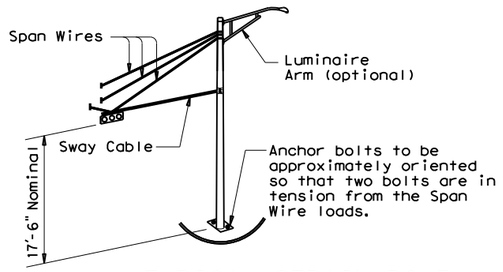

TYPICAL STRAIN POLE ASSEMBLY

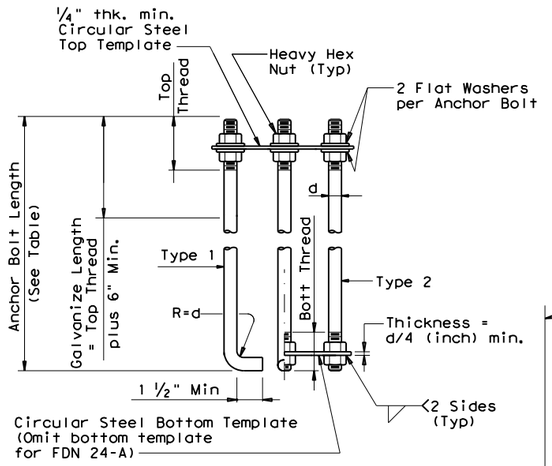

HOOKED ANCHOR (TYPE 1) NUT ANCHOR (TYPE 2)

ANCHOR BOLT ASSEMBLY

⑧ Orient anchor bolts orthogonal with the fixed arm direction to ensure that two bolts are in tension under dead load.

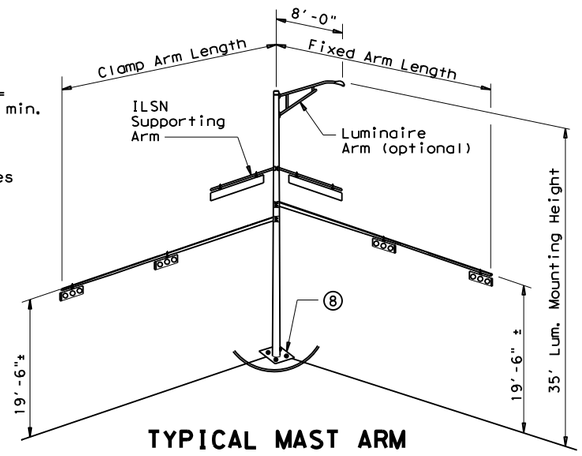

TYPICAL MAST ARM ASSEMBLY

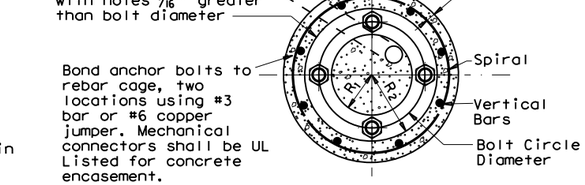

TOP VIEW

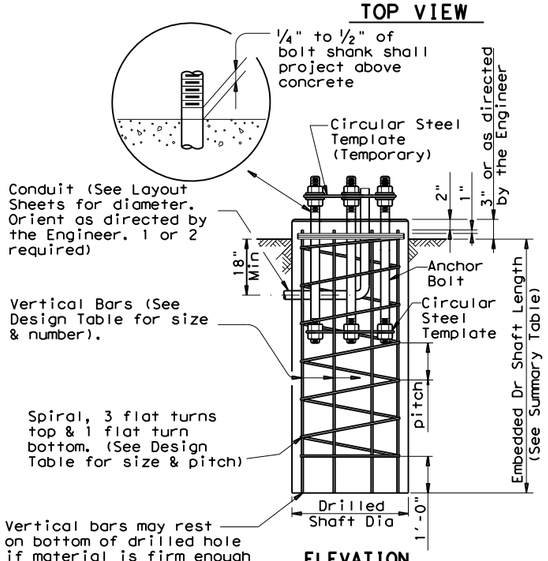

ELEVATION

FOUNDATION DETAILS

GENERAL NOTES:

Design conforms to 1994 AASHTO Standard Specifications for Structural Supports forHighway Signs, Luminaires and Traffic Signals and interim revisions thereto.

Reinforcing steel shall conform to Item 440, "Reinforcing Steel".

Concrete shall be Class "C".

Threads for anchor bolts and nuts shall be rolled or cut threads of 8UN series up to 2"in diameter or UNC series for all sizes. Bolts and nuts shall have Class 2A and 2B fit tolerances. Galvanized nuts shall be tapped after galvanizing.

Anchor bolts that are larger than 1" in diameter shall conform to "alloy steel" or "medium-strength mild steel" per Item 449, "Anchor Bolts". Anchor bolts that are 1" in diameter or less shall conform to ASTM A36. Galvanize a minimum of the top end thread length plus 6" for all anchor bolts unless otherwise noted. Exposed washers and exposed nuts shall be galvanized. All galvanizing shall be in accordance with Item 445, "Galvanizing".

Templates and embedded nuts need not be galvanized. Lubricate and tighten anchor bolts when erecting the structure in accordance with Item 449, "Anchor Bolts".

Texas Department of Transportation
Traffic Operations Division

TRAFFIC SIGNAL POLE FOUNDATION

SHEET 2 OF 4

TS-FD-12

© TxDOT August 1995

DN: MS	CK: JSY	DW: MAQ/MMF	CK: JSY/TEB

REVISIONS 5-96 11-99 1-12

CONT	SECT	JOB	HIGHWAY
0055	15	072	US 84

DIST	COUNTY	SHEET NO.
WAC	MCLENNAN	407

STATE OF TEXAS — SCOTT R. ARNOLD — 96782 — LICENSED PROFESSIONAL ENGINEER

Scott R. Arnold, P.E.
12/21/2020

DISCLAIMER: The use of this standard is governed by the "Texas Engineering Practice Act". No warranty of any kind is made by TxDOT for any purpose whatsoever. TxDOT assumes no responsibility for the conversion of this standard to other formats or for incorrect results or damages resulting from its use.

FOUNDATION DESIGN TABLE

FDN TYPE	DRILLED SHAFT DIA	REINFORCING STEEL		EMBEDDED DRILLED SHAFT LENGTH-ft ④, ⑤, ⑥			ANCHOR BOLT DESIGN ①				FOUNDATION DESIGN LOAD ②		TYPICAL APPLICATION
		VERT BARS	SPIRAL & PITCH	TEXAS CONE PENETROMETER N blows/ft 10	15	40	ANCHOR BOLT DIA	Fy (ksi)	BOLT CIR DIA	ANCHOR TYPE	MOMENT K-ft	SHEAR Kips	
24-A	24"	4- #5	#2 at 12"	5.7	5.3	4.5	¾"	36	12 ¾"	1	10	1	Pedestal pole, pedestal mounted controller.
30-A	30"	8- #9	#3 at 6"	11.3	10.3	8.0	1 ½"	55	17"	2	87	3	Mast arm assembly. (see Selection Table)
36-A	36"	10- #9	#3 at 6"	13.2	12.0	9.4	1 ¾"	55	19"	2	131	5	Mast arm assembly. (see Selection Table) 30' strain pole with or without luminaire.
36-B	36"	12- #9	#3 at 6"	15.2	13.6	10.4	2"	55	21"	2	190	7	Mast arm assembly. (see Selection Table) Strain pole taller than 30' & strain pole with mast arm
42-A	42"	14- #9	#3 at 6"	17.4	15.6	11.9	2 ¼"	55	23"	2	271	9	Mast arm assembly. (see Selection Table)

NOTES:

① Anchor bolt design develops the foundation capacity given under Foundation Design Loads.

② Foundation Design Loads are the allowable moments and shears at the base of the structure.

③ Foundations may be listed separately or grouped according to similarity of location and type. Quantities are for the Contractor's information only.

④ Field Penetrometer readings at a depth of approximately 3 to 5 feet may be used to adjust shaft lengths.

⑤ If rock is encountered, the Drilled Shaft shall extend a minimum of two diameters into solid rock.

⑥ Decimal lengths in Design Table are to allow interpolation for other penetrometer values. Round to nearest foot for entry into Summary Table.

FOUNDATION SUMMARY TABLE ③

LOCATION IDENTIFICATION	AVG. N BLOW /ft.	FDN TYPE	NO. EA	DRILLED SHAFT LENGTH ⑥ (FEET) 24-A	30-A	36-A	36-B	42-A
17TH								
PED POLE A, B, C, D	10	24-A	4	22.8				
MAST ARM A	10	30-A	1		11.3			
MAST ARM B, C	10	36-A	2			26.4		
15TH								
PED POLE A, B, C, D	10	24-A	4	22.8				
MAST ARM B, D	10	30-A	2		22.6			
MAST ARM A, C	10	36-A	2			26.4		
12TH								
PED POLE A, B, C, D, E, F	10	24-A	6	34.2				
MAST ARM A, B, E	10	30-A	3		33.9			
MAST ARM C, D	10	36-A	2			26.4		
11TH								
PED POLE A, B	10	24-A	2	11.4				
MAST ARM A, B C, D	10	36-A	4			52.8		
9TH								
PED POLE A, B	10	24-A	2	11.4				
MAST ARM B, D	10	30-A	2		22.6			
MAST ARM A, C	10	36-A	2			26.4		
TOTAL DRILLED SHAFT LENGTHS				102.6	90.4	158.4		

*24A IS SUBSIDIARY TO ITEMS:
687 6001 PED POLE ASSEMBLY
687 6002 PEDESTRIAN PUSH BUTTON POLE

FOUNDATION SELECTION TABLE FOR STANDARD MAST ARM PLUS ILSN SUPPORT ASSEMBLIES (ft)

		FDN 30-A	FDN 36-A	FDN 36-B	FDN 42-A
80 MPH DESIGN WIND SPEED	MAX SINGLE ARM LENGTH	32'	48'		
	MAXIMUM DOUBLE ARM LENGTH COMBINATIONS	24' X 24'			
		28' X 28'			
		32' X 28'	32' X 32'		
			36' X 36'		
			40' X 36'		
			44' X 28'	44' X 36'	
100 MPH DESIGN WIND SPEED	MAX SINGLE ARM LENGTH		36'	44'	
	MAXIMUM DOUBLE ARM LENGTH COMBINATIONS		24' X 24'		
			28' X 28'		
			32' X 24'	32' X 32'	
				36' X 36'	
				40' x24'	40' X 36'
					44' x 36'

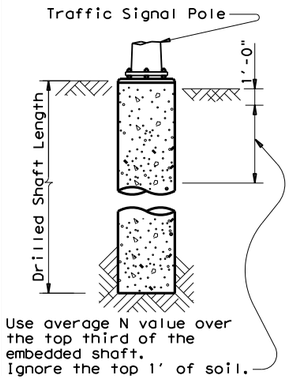

Use average N value over the top third of the embedded shaft. Ignore the top 1' of soil.

ANCHOR BOLT & TEMPLATE SIZES

BOLT DIA IN.	⑦ BOLT LENGTH	TOP THREAD	BOTTOM THREAD	BOLT CIRCLE	R2	R1
¾"	1'-6"	3"	—	12 ¾"	7 ⅛"	5 ⅝"
1 ½"	3'-4"	6"	4"	17"	10"	7"
1 ¾"	3'-10"	7"	4 ½"	19"	11 ¼"	7 ¾"
2"	4'-3"	8"	5"	21"	12 ½"	8 ½"
2 ¼"	4'-9"	9"	5 ½"	23"	13 ¾"	9 ¼"

⑦ Min dimensions given, longer bolts are acceptable.

EXAMPLE:
1. For 80mph design wind speed, foundation 30-A can support up to a 32' arm with another arm up to 28'
2. For 100mph design wind speed, foundation 36-A can support a single 36' mast arm.

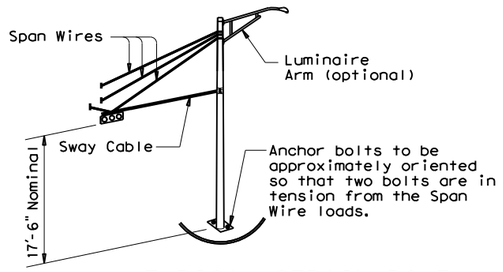

TYPICAL STRAIN POLE ASSEMBLY

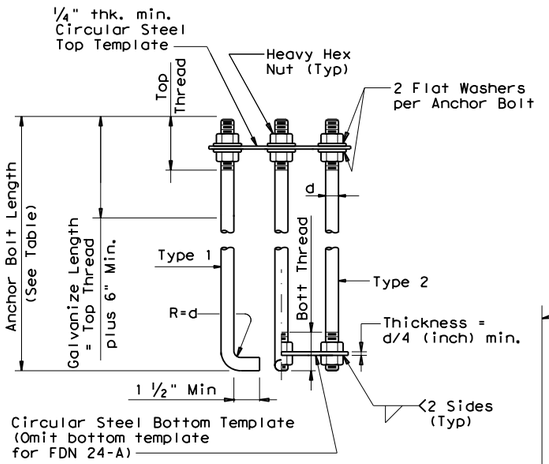

HOOKED ANCHOR (TYPE 1) NUT ANCHOR (TYPE 2)

ANCHOR BOLT ASSEMBLY

⑧ Orient anchor bolts orthogonal with the fixed arm direction to ensure that two bolts are in tension under dead load.

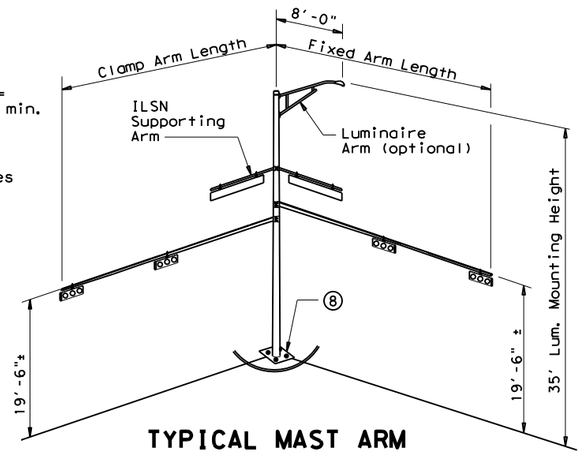

TYPICAL MAST ARM ASSEMBLY

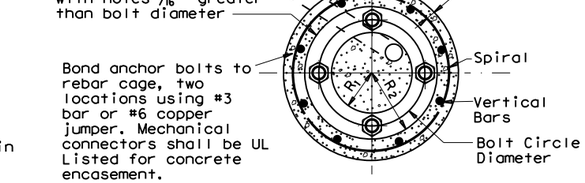

TOP VIEW

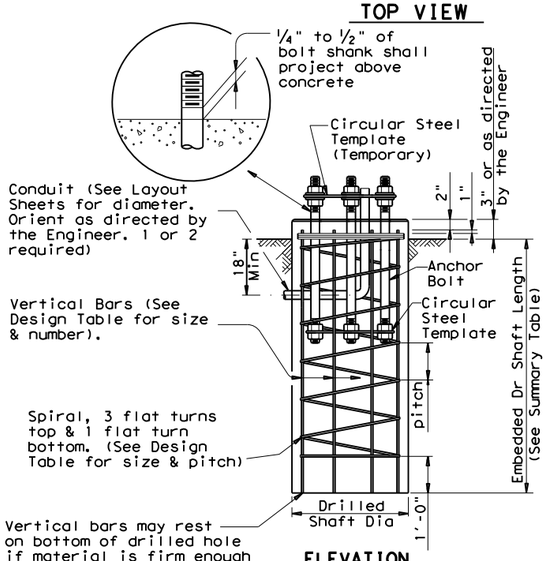

ELEVATION

FOUNDATION DETAILS

GENERAL NOTES:

Design conforms to 1994 AASHTO Standard Specifications for Structural Supports forHighway Signs, Luminaires and Traffic Signals and interim revisions thereto.

Reinforcing steel shall conform to Item 440, "Reinforcing Steel".

Concrete shall be Class "C".

Threads for anchor bolts and nuts shall be rolled or cut threads of 8UN series up to 2"in diameter or UNC series for all sizes. Bolts and nuts shall have Class 2A and 2B fit tolerances. Galvanized nuts shall be tapped after galvanizing.

Anchor bolts that are larger than 1" in diameter shall conform to "alloy steel" or "medium-strength mild steel" per Item 449, "Anchor Bolts". Anchor bolts that are 1" in diameter or less shall conform to ASTM A36. Galvanize a minimum of the top end thread length plus 6" for all anchor bolts unless otherwise noted. Exposed washers and exposed nuts shall be galvanized. All galvanizing shall be in accordance with Item 445, "Galvanizing".

Templates and embedded nuts need not be galvanized. Lubricate and tighten anchor bolts when erecting the structure in accordance with Item 449, "Anchor Bolts".

STATE OF HAWAII SCOTT R. ARNOLD 96782 LICENSED PROFESSIONAL ENGINEER

Scott R. Arnold, P.E.
12/21/2020

Texas Department of Transportation
Traffic Operations Division

TRAFFIC SIGNAL POLE FOUNDATION

SHEET 3 OF 4

TS-FD-12

© TxDOT August 1995

DN: MS	CK: JSY	DW: MAO/MMF	CK: JSY/TEB

REVISIONS 5-96 11-99 1-12

CONT	SECT	JOB	HIGHWAY
0055	15	072	US 84
DIST	COUNTY		SHEET NO.
WAC	MCLENNAN		408

DATE:
FILE:

DISCLAIMER: The use of this standard is governed by the "Texas Engineering Practice Act". No warranty of any kind is made by TxDOT for any purpose whatsoever. TxDOT assumes no responsibility for the conversion of this standard to other formats or for incorrect results or damages resulting from its use.

DATE:
FILE:

FOUNDATION DESIGN TABLE

FDN TYPE	DRILLED SHAFT DIA	REINFORCING STEEL		EMBEDDED DRILLED SHAFT LENGTH-ft ④, ⑤, ⑥			ANCHOR BOLT DESIGN ①				FOUNDATION DESIGN LOAD ②		TYPICAL APPLICATION
		VERT BARS	SPIRAL & PITCH	TEXAS CONE PENETROMETER N blows/ft 10	15	40	ANCHOR BOLT DIA	Fy (ksi)	BOLT CIR DIA	ANCHOR TYPE	MOMENT K-ft	SHEAR Kips	
24-A	24"	4- #5	#2 at 12"	5.7	5.3	4.5	¾"	36	12 ¾"	1	10	1	Pedestal pole, pedestal mounted controller.
30-A	30"	8- #9	#3 at 6"	11.3	10.3	8.0	1 ½"	55	17"	2	87	3	Mast arm assembly. (see Selection Table)
36-A	36"	10- #9	#3 at 6"	13.2	12.0	9.4	1 ¾"	55	19"	2	131	5	Mast arm assembly. (see Selection Table) 30' strain pole with or without luminaire.
36-B	36"	12- #9	#3 at 6"	15.2	13.6	10.4	2"	55	21"	2	190	7	Mast arm assembly. (see Selection Table) Strain pole taller than 30' & strain pole with mast arm
42-A	42"	14- #9	#3 at 6"	17.4	15.6	11.9	2 ¼"	55	23"	2	271	9	Mast arm assembly. (see Selection Table)

FOUNDATION SELECTION TABLE FOR STANDARD MAST ARM PLUS ILSN SUPPORT ASSEMBLIES (ft)

		FDN 30-A	FDN 36-A	FDN 36-B	FDN 42-A
80 MPH DESIGN WIND SPEED	MAX SINGLE ARM LENGTH	32'	48'		
	MAXIMUM DOUBLE ARM LENGTH COMBINATIONS	24' X 24'			
		28' X 28'			
		32' X 28'	32' X 32'		
			36' X 36'		
			40' X 36'		
			44' X 28'	44' X 36'	
100 MPH DESIGN WIND SPEED	MAX SINGLE ARM LENGTH		36'	44'	
	MAXIMUM DOUBLE ARM LENGTH COMBINATIONS		24' X 24'		
			28' X 28'		
			32' X 24'	32' X 32'	
				36' X 36'	
				40' x24'	40' X 36'
					44' x 36'

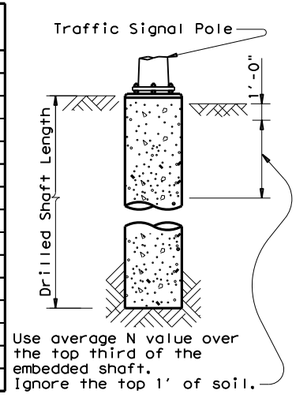

NOTES:

① Anchor bolt design develops the foundation capacity given under Foundation Design Loads.

② Foundation Design Loads are the allowable moments and shears at the base of the structure.

③ Foundations may be listed separately or grouped according to similarity of location and type. Quantities are for the Contractor's information only.

④ Field Penetrometer readings at a depth of approximately 3 to 5 feet may be used to adjust shaft lengths.

⑤ If rock is encountered, the Drilled Shaft shall extend a minimum of two diameters into solid rock.

⑥ Decimal lengths in Design Table are to allow interpolation for other penetrometer values. Round to nearest foot for entry into Summary Table.

ANCHOR BOLT & TEMPLATE SIZES

BOLT DIA IN.	⑦ BOLT LENGTH	TOP THREAD	BOTTOM THREAD	BOLT CIRCLE	R2	R1
¾"	1'-6"	3"	—	12 ¾"	7 ⅛"	5 ⅝"
1 ½"	3'-4"	6"	4"	17"	10"	7"
1 ¾"	3'-10"	7"	4 ½"	19"	11 ¼"	7 ¾"
2"	4'-3"	8"	5"	21"	12 ½"	8 ½"
2 ¼"	4'-9"	9"	5 ½"	23"	13 ¾"	9 ¼"

⑦ Min dimensions given, longer bolts are acceptable.

FOUNDATION SUMMARY TABLE ③

LOCATION IDENTIFICATION	AVG. N BLOW /ft.	FDN TYPE	NO. EA	DRILLED SHAFT LENGTH ⑥ (FEET) 24-A	30-A	36-A	36-B	42-A
5TH								
PED POLE A, B, C, D, E	10	24-A	5	28.5				
MAST ARM A, B, C	10	36-A	3			39.6		
4TH								
PED POLE A, B, C	10	24-A	3	17.1				
MAST ARM A, C	10	36-A	2			26.4		
DALLAS								
PED POLE A, B	10	24-A	2	11.4				
MAST ARM B C, D	10	36-A	3			39.6		
TURNER								
PED POLE A, B, C, D	10	24-A	4	22.8				
MAST ARM B, D	10	30-A	2		22.6			
MAST ARM A, C	10	36-A	2			26.4		
GARRISON								
PED POLE A, B, C, D, E, F	10	24-A	6	34.2				
MAST ARM B, D	10	30-A	2		22.6			
CLIFTON								
PED POLE A, B, C, D, E	10	24-A	5	28.5				
MAST ARM D	10	30-A	1		11.3			
MAST ARM A	10	36-A	1			13.2		
TOTAL DRILLED SHAFT LENGTHS				142.5	56.5	145.2		

*24A IS SUBSIDIARY TO ITEMS:
687 6001 PED POLE ASSEMBLY
687 6002 PEDESTRIAN PUSH BUTTON POLE

EXAMPLE:
1. For 80mph design wind speed, foundation 30-A can support up to a 32' arm with another arm up to 28'
2. For 100mph design wind speed, foundation 36-A can support a single 36' mast arm.

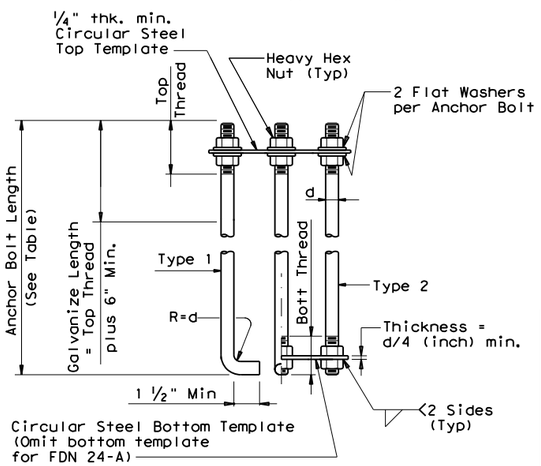

ANCHOR BOLT ASSEMBLY

⑧ Orient anchor bolts orthogonal with the fixed arm direction to ensure that two bolts are in tension under dead load.

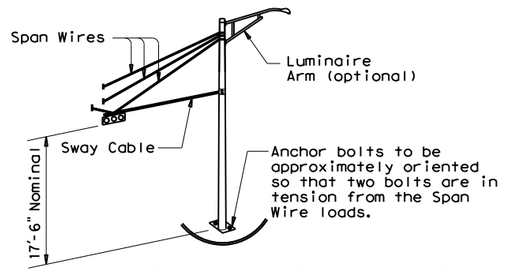

TYPICAL STRAIN POLE ASSEMBLY

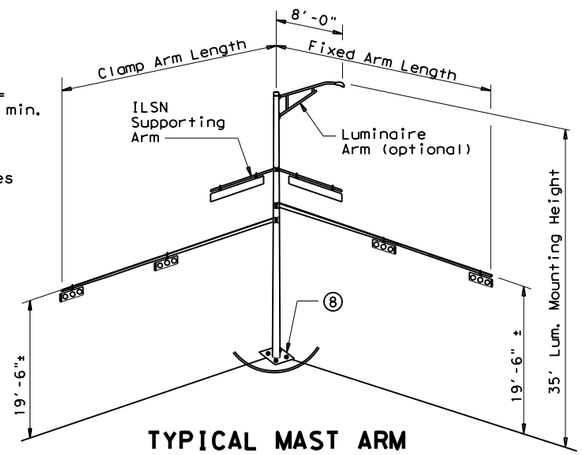

TYPICAL MAST ARM ASSEMBLY

FOUNDATION DETAILS

GENERAL NOTES:

Design conforms to 1994 AASHTO Standard Specifications for Structural Supports forHighway Signs, Luminaires and Traffic Signals and interim revisions thereto.

Reinforcing steel shall conform to Item 440,"Reinforcing Steel".

Concrete shall be Class "C".

Threads for anchor bolts and nuts shall be rolled or cut threads of 8UN series up to 2"in diameter or UNC series for all sizes. Bolts and nuts shall have Class 2A and 2B fit tolerances. Galvanized nuts shall be tapped after galvanizing.

Anchor bolts that are larger than 1" in diameter shall conform to "alloy steel" or "medium-strength mild steel" per Item 449, "Anchor Bolts". Anchor bolts that are 1" in diameter or less shall conform to ASTM A36. Galvanize a minimum of the top end thread length plus 6" for all anchor bolts unless otherwise noted. Exposed washers and exposed nuts shall be galvanized. All galvanizing shall be in accordance with Item 445, "Galvanizing".

Templates and embedded nuts need not be galvanized. Lubricate and tighten anchor bolts when erecting the structure in accordance with Item 449, "Anchor Bolts".

STATE OF TEXAS SCOTT R. ARNOLD 96782 LICENSED PROFESSIONAL ENGINEER

Scott R. Arnold, P.E.
12/21/2020

Texas Department of Transportation
Traffic Operations Division

TRAFFIC SIGNAL POLE FOUNDATION

SHEET 4 OF 4

TS-FD-12

© TxDOT August 1995	DN: MS	CK: JSY	DW: MAO/MMF	CK: JSY/TEB
REVISIONS 5-96 11-98 1-12	CONT	SECT	JOB	HIGHWAY
	005	15	072	US 84
	DIST	COUNTY		SHEET NO.
	WAC	MCLENNAN		409

DISCLAIMER: The use of this standard is governed by the "Texas Engineering Practice Act". No warranty of any kind is made by TxDOT for any purpose whatsoever. TxDOT assumes no responsibility for the conversion of this standard to other formats or for incorrect results or damages resulting from its use.

DATE:
FILE:

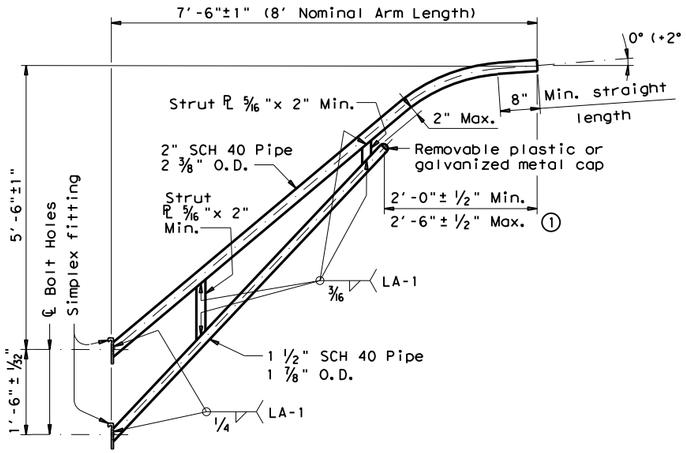

8-FOOT LUMINAIRE ARM

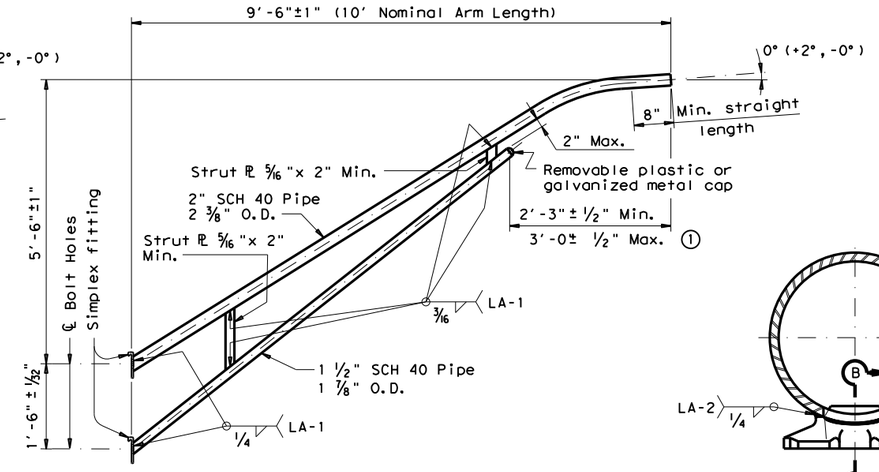

10-FOOT LUMINAIRE ARM

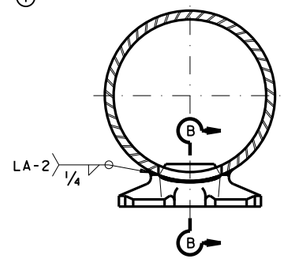

DIRECT ATTACHMENT DETAIL

MATERIALS	
Pole or Arm Simplex	ASTM A27 Gr.65-35 or A148 Gr.80-50, A576 Gr.1021 (3), or A36 (Arm only)
Arm Pipes	ASTM A53 Gr.B, A501, A1008 HSLAS-F Gr.50 (4), or A1011 HSLAS-F Gr.50 (4)
Arm Strut Plates (2)	ASTM A36, A572 Gr.50 (4), or A588
Misc.	ASTM designations as noted

(1) Dimensional limits are given to show acceptable variation in design. All of a Fabricator's production of a particular arm length shall have the same dimensions within specified tolerances.

(2) Any of the materials listed for plates may be used where the drawings do not specify a particular ASTM designation.

(3) A576 must be suitable for forging and also meet minimum tensile strength of 65 ksi, minimum yield of 35 ksi, and elongation in 2 inches of 22 percent.

(4) ASTM A572, A1008 HSLAS-F, and A1011 HSLAS-F may have higher yield strengths but shall not have less elongation than the grade indicated.

GENERAL NOTES:

Design conforms to 1994 AASHTO Standard Specifications for Structural Supports for Highway Signs, Luminaires, and Traffic Signals and Interim Revisions thereto. Design Wind Speed equals 90 mph plus a 1.3 gust factor. Arms are designed to support a 60 lb. luminaire having an effective projected area (actual area times drag coefficient) of 1.6 sq. ft.

Materials and fabrication shall be in accordance with Item 686, "Traffic Signal Pole Assemblies (Steel)" and with the details, dimensions, and weld procedures shown herein. Weld references call for preapproved weld procedures which the Fabricator must obtain prior to fabrication. In the absense of specified Fabricaton tolerances, dimensions shall be within the tolerances generally obtainable in normal fabrication practice.

Unless otherwise noted, all parts shall be galvanized after fabrication in accordance with Item 445, "Galvanizing".

Deviation from the details and dimensions shown herein require submission of shop drawings in accordance with Item 441, "Steel Structures". Alternate designs are not acceptable.

Each pole simplex fitting shall be supplied with 2 ASTM A325 bolts and 2 lock washers of the size specified. The bolts and lock washers shall be secured to the pole with the other hardware items called for in the plans. When clamp attachment is specified, the Fabricator shall ship the clamp assembly securely attached to the pole at the location shown on the plans.

If clamp assemblies are ordered without poles, the Fabricator shall ship one upper and one lower clamp assembly together in a single package, including all nuts and washers required for the clamps and simplex fittings.

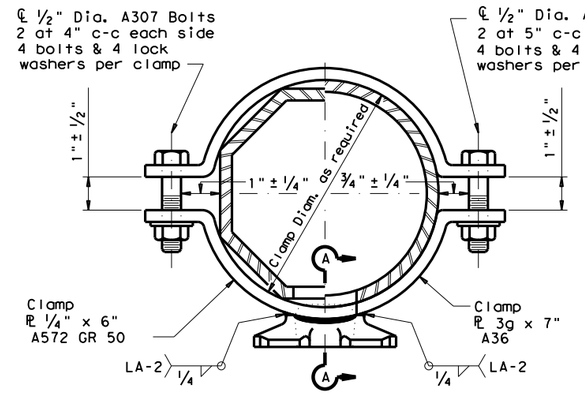

CLAMP ATTACHMENT DETAIL NO. 1 (HALF SECTION)

CLAMP ATTACHMENT DETAIL NO. 2 (HALF SECTION)

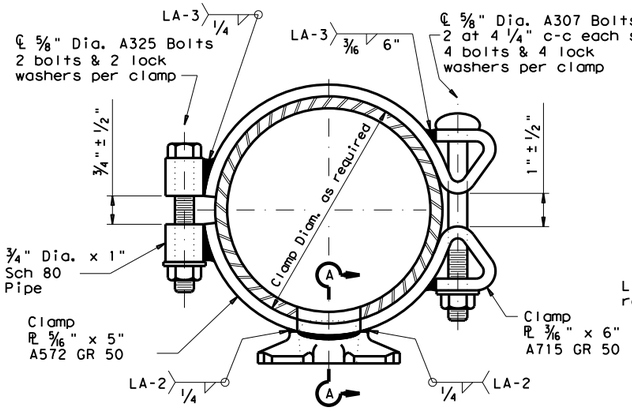

CLAMP ATTACHMENT DETAIL NO. 3 (HALF SECTION)

CLAMP ATTACHMENT DETAIL NO. 4 (HALF SECTION)

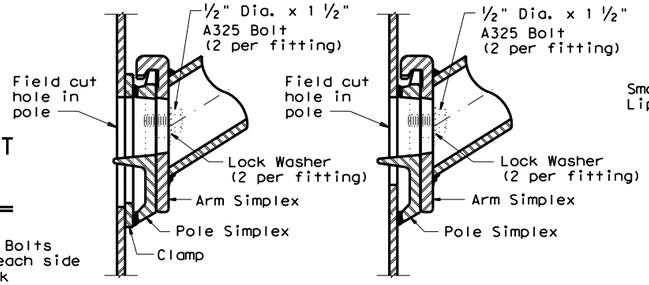

UPPER SIMPLEX FITTING

UPPER SIMPLEX FITTING

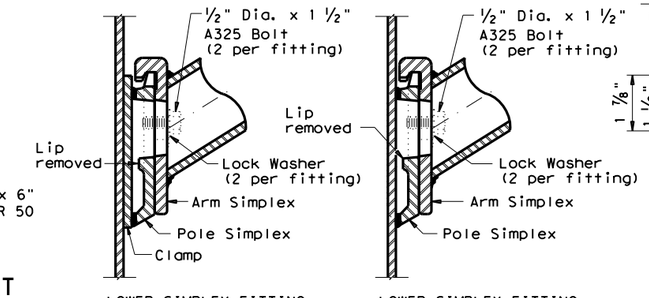

LOWER SIMPLEX FITTING

SECTON A-A

LOWER SIMPLEX FITTING

SECTON B-B

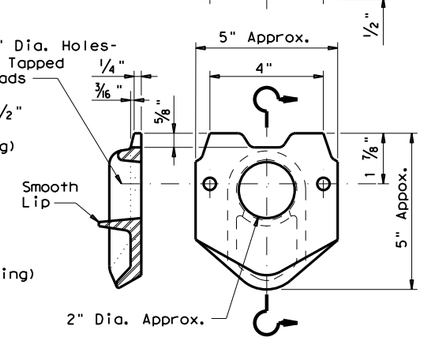

POLE SIMPLEX DETAIL

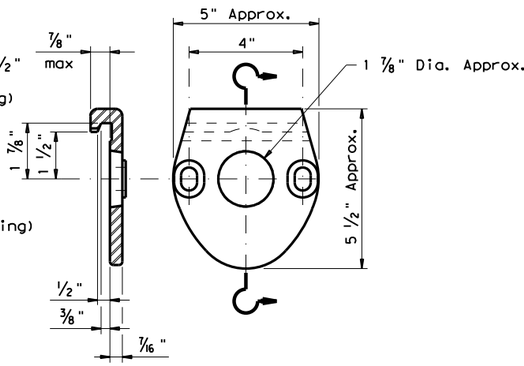

ARM SIMPLEX DETAIL

Texas Department of Transportation
Traffic Operations Division

STANDARD ASSEMBLY DRAWINGS FOR LUMINAIRE SUPPORT STRUCTURES

ARM DETAILS

LUM-A-12

© TxDOT August 1995

DN: LEH	CK: JSY	DW: LTT	CK: TEB

REVISIONS
5-96
1-99
1-12

CONT	SECT	JOB	HIGHWAY
005	515	072	US 84
DIST	COUNTY		SHEET NO.
WAC	MCLENNAN		410

DISCLAIMER: The use of this standard is governed by the "Texas Engineering Practice Act". No warranty of any kind is made by TxDOT for any purpose whatsoever. TxDOT assumes no responsibility for the conversion of this standard to other formats or for incorrect results or damages resulting from its use.

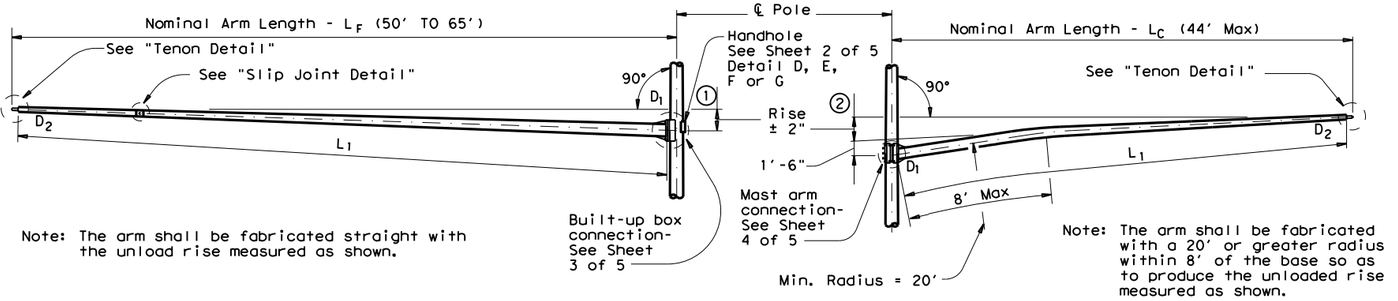

FIXED MOUNT TRAFFIC SIGNAL ARM

① See Sheet 3 of 5 for Arm Rise

CLAMP-ON TRAFFIC SIGNAL ARM (IF REQUIRED)

② See Sheet 4 of 5 for Arm Rise and Clamp-on Arm Details

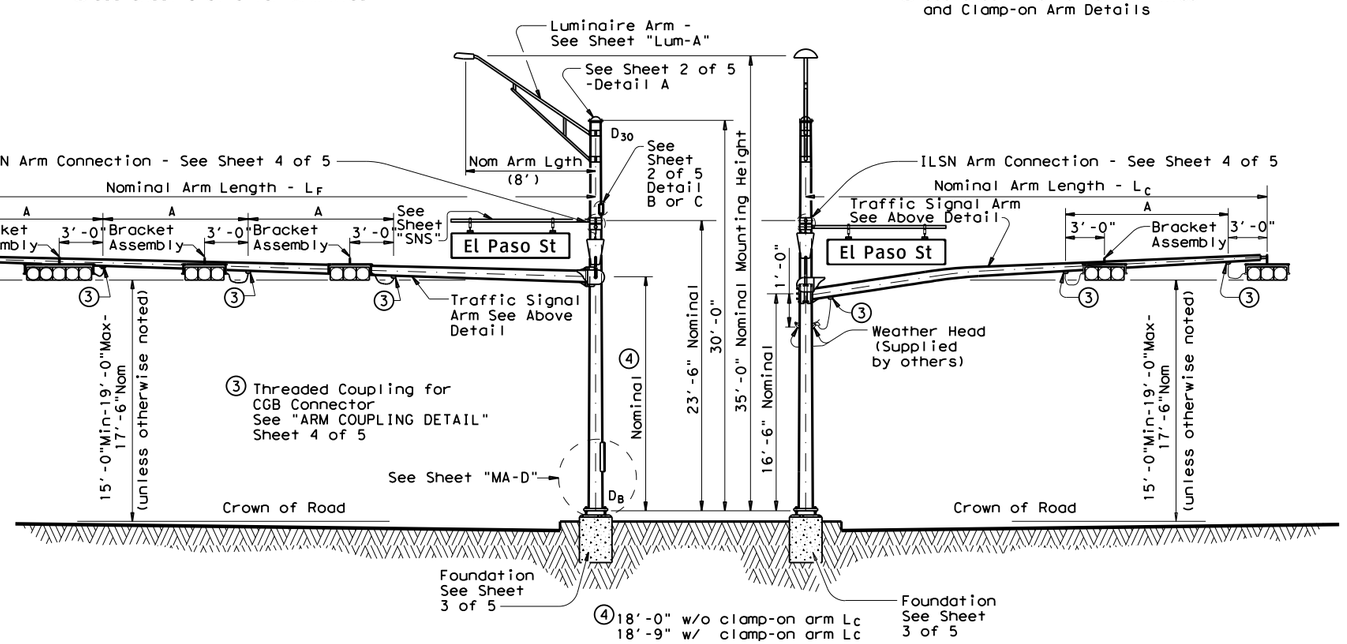

ELEVATION
(Showing fixed mount arm)

STRUCTURE ASSEMBLY

ELEVATION
(Showing clamp-on arm)

TABLE OF DIMENSIONS "A"										
Arm Length	24'	28'	32'	36'	40'	44'	50'	55'	60'	65'
Arm Type II	10'	11'	12'	13'						
Arm Type III			10'	11'	12'	12'				
Arm Type IV							12'	12'	12'	12'

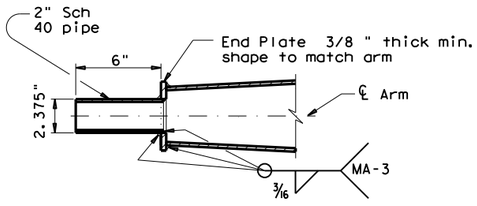

TENON DETAIL

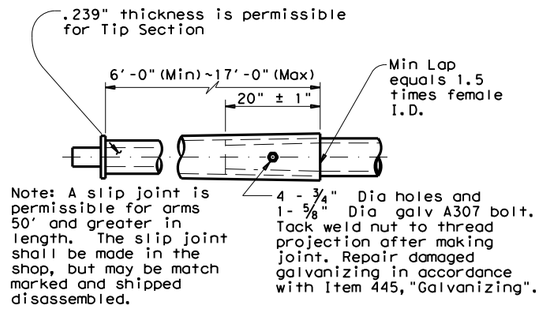

Note: A slip joint is permissible for arms 50' and greater in length. The slip joint shall be made in the shop, but may be match marked and shipped disassembled.

SLIP JOINT DETAIL (FIXED MOUNT ARM)

GENERAL NOTES:

Design conforms to 1994 AASHTO Standard Specifications for Structural Supports for Highway Signs, Luminaires, and Traffic Signals and Interim Specifications thereto. Design Wind Speed can be either 100 mph or 80 mph plus a 1.3 gust factor. If clamp-on traffic signal is required, designs are based on an arm included angle of 90 degrees or more. Angles of less than approximately 75 degrees will require a special design.

Poles are designed to support one 8'-0" luminaire arm, two 9'-0" internally lighted street name (ILSN) signs and two traffic signal arms with limited length combinations.

Each arm with its related attachment is shown below

Arm	Equivalent DL ⑤	WL EPA ⑤⑥
8' Luminaire Arm	Luminaire 60 lbs	1.6 sq ft
9' ILSN Arm	Sign 85 lbs	11.5 sq ft
50' to 65' Fixed Mount Arm	Signal Loads 310 lbs	52 sq ft
Up to 44' Clamp-on Arm	Signal Loads 180 lbs	32.4 sq ft

⑤ Equivalent dead load plus horizontal wind load applied at the end of arm except ILSN arm, which applied 4.5' from the centerline of the pole.

⑥ Effective projected area (actual area times drag coefficient) for the application of horizontal wind load.

Except as noted in Sheet 1 thru 5 of 5, other details not covered shall refer to Standard Sheet "MA-D" for pole details, "LUM-A" for luminaire arm and connection details, "SNS" for internally lighted street name sign details, and "TS-FD" for anchor bolt and foundation details.

Fabrication shall be in accordance with Item 686, "Traffic Signal Pole Assemblies (Steel)" and with the details, dimensions, and weld procedures shown herein. Weld references call for preapproved weld procedures which the Fabricator must obtain prior to fabrication. Material, fabrication tolerances, and shipping practices shall also meet the requirements of this sheet and Item 686, "Traffic Signal Pole Assemblies (Steel)".

Unless otherwise noted, all parts shall be galvanized in accordance with Item 445, "Galvanizing" after fabrication.

Deviations from the details and dimensions shown herein require submission of shop drawings in accordance with the Item 441, "Steel Structures". Alternate designs are not acceptable.

Installation of damping plate for the long mast arm is not recommended.

Provision of the bracket assembly used to support the traffic signal heads shall be under the direction of the Engineer for approval.

Design also conforms to NCHRP Report 412 for fatigue resistance except that there are no stiffeners at the base plate. TxDOT is conducting tests to determine if stiffeners at the base plate will or will not result in optimal performance; depending upon the results of the tests, poles may need a retrofit to ensure optimal fatigue performance.

Texas Department of Transportation
Traffic Operations Division

TRAFFIC SIGNAL SUPPORT STRUCTURES
LONG MAST ARM ASSEMBLY (50 TO 65 FT) (80 AND 100 MPH WIND ZONE)
LMA(1)-12

Sheet 1 of 5

© TxDOT July 2000

DN: JSY	CK: ARC	DW: TGG	CK: JSY

REVISIONS	CONT	SECT	JOB	HIGHWAY
4-20-01	0055	15	072	US 84
1-12	DIST	COUNTY		SHEET NO.
	WAC	MCLENNAN		411

DATE:
FILE:

131A

DISCLAIMER: The use of this standard is governed by the "Texas Engineering Practice Act". No warranty of any kind is made by TxDOT for any purpose whatsoever. TxDOT assumes no responsibility for the conversion of this standard to other formats or for incorrect results or damages resulting from its use.

DATE:
FILE:

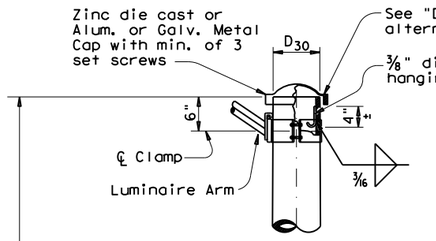

DETAIL A

(for pole with luminaire)

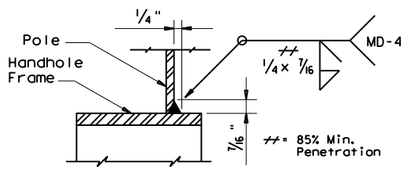

DETAIL H

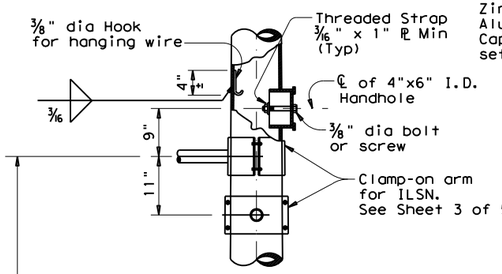

DETAIL B

(If ILSN applied)

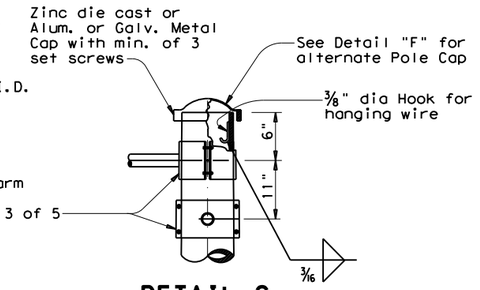

DETAIL C

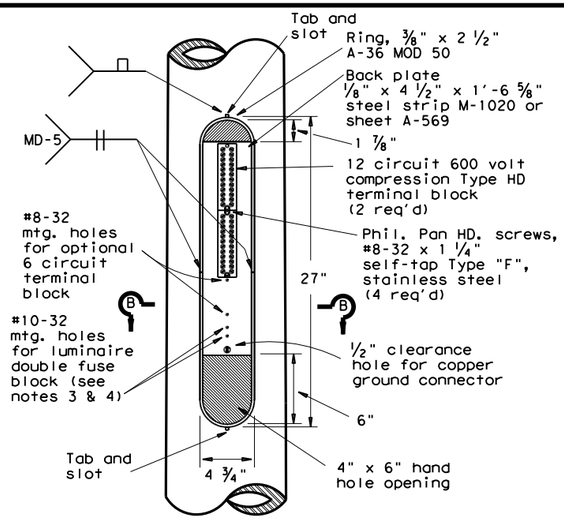

ACCESS COMPARTMENT

MATERIALS	
Round Shafts or Polygonal Shafts (7)	ASTM A595 Gr.A, A588, A1008 HSLAS Gr.50 Class 2, A1011 HSLAS Gr.50 Class 2, A572 Gr.50 or A1011 SS Gr.50 (8)
Plates (7)	ASTM A36, A588, or A572 Gr.50
Connection Bolts	ASTM A325, or A449 except where noted
Pin Bolts	ASTM A325
Pipe (7)	ASTM A53 Gr.B, A501, A1008 HSLAS-F Gr.50, A1011 HSLAS-F Gr.50
Misc. Hardware	Galvanized steel or stainless steel or as noted

(7) ASTM A572, A1008 HSLAS, A1011 HSLAS, A1008 HSLAS-F, A1011 HSLAS-F, or A1011 SS may have higher yield strengths but shall not have less elongation than the grade indicated.

(8) ASTM A1011 SS Gr.50 shall also have a minimum elongation of 18 percent in 8 inches or 23 percent in 2 inches. Material thickness in excess of those stipulated under A1011 SS will be acceptable providing the material meets all other A1011 SS requirements and the requirements of this item.

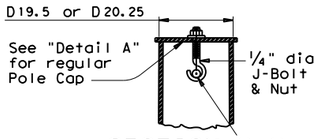

SECTION Y-Y

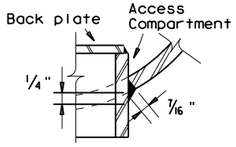

DETAIL J

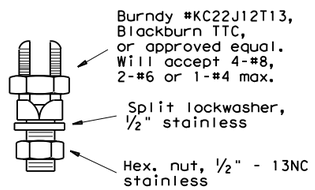

COPPER GROUND CONNECTOR

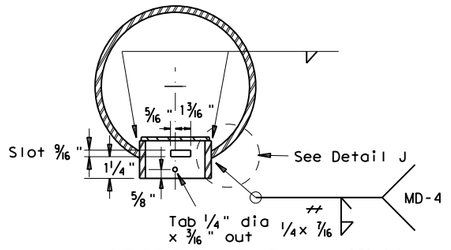

SECTION B-B

// = 85% Min. Penetration

Opening for access compartment shall be no more than 1/16 inch wider than the access compartment itself.

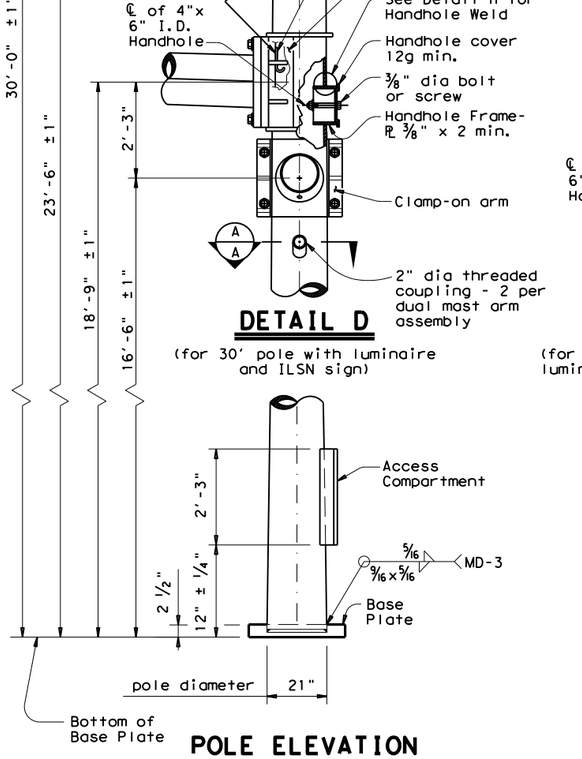

DETAIL D

(for 30' pole with luminaire and ILSN sign)

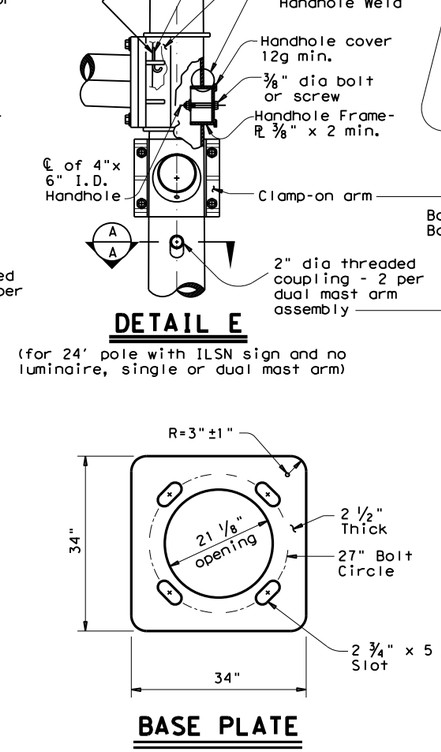

DETAIL E

(for 24' pole with ILSN sign and no luminaire, single or dual mast arm)

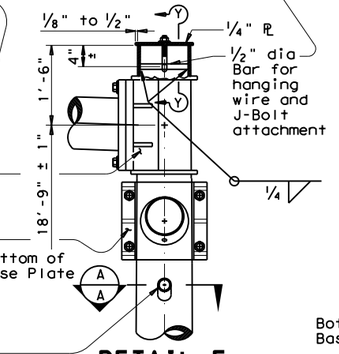

DETAIL F

(for 20.25' pole with no ILSN sign and no luminaire, dual mast arm)

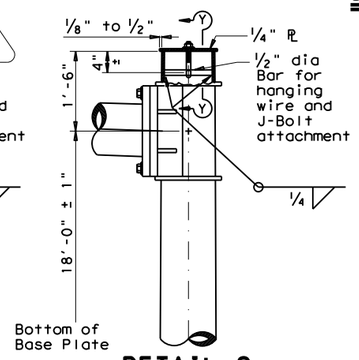

DETAIL G

(for 19.5' pole with no ILSN sign and no luminaire, single mast arm)

ACCESS COMPARTMENT NOTES:

1. The cover shall be one piece formed from ABS plastic, shall be a pearl gray color, and shall be suitable for exposure to harsh sunlight and extreme weather. Cover shall latch with two screw latches and shall fit tightly to the enclosure ring to create a rainproof seal. Latch screws shall be 1/4-20 stainless flat socket head screws with tamper proof feature.
2. The pole manufacturer shall provide with each pole a separate kit consisting of: one cover with two latching assemblies, two terminal strips (Marathon #985GP12CU or approved equal), four #8-32 x 1 1/4" self tapping type "F" stainless steel pan head screws, and one ground connector (Blackburn TTC, Burndy KC22J12T13, or Ilsco SSS-5). The traffic signal contractor shall install the kit items in the field.
3. The screw hole spacing on the enclosure back plate shall be for two Marathon #985GP12 terminal strips, one Marathon #985GP06CU terminal strip, and one Bussmann #BM6032B fuse block.
4. Install one Bussmann #BM6032B, Littelfuse #L60030M-2C, or Ferraz-Shawmut #30352 fuse block for poles where luminaires are to be installed.

POLE ELEVATION

BASE PLATE

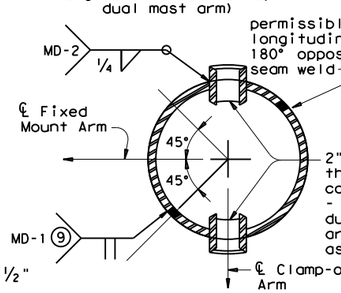

SECTION A-A

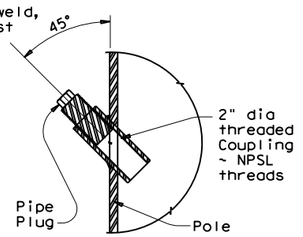

POLE COUPLING DETAIL

(9) Longitudinal seam weld must be oriented within 90° (45° rotation each side) along the fixed mount arm. 60% min penetration required, 100% penetration within 6" of circumferential base weld.

Texas Department of Transportation
Traffic Operations Division

TRAFFIC SIGNAL SUPPORT STRUCTURES
LONG MAST ARM ASSEMBLY (50 TO 65 FT) (80 AND 100 MPH WIND ZONE)

Sheet 2 of 5

LMA(2)-12

©TxDOT July 2000

DN: JSY	CK: ARC	DW: TGG	CK: JSY

REVISIONS
4-20-01
1-12

CONT	SECT	JOB	HIGHWAY
005	515	072	US 84
DIST	COUNTY		SHEET NO.
WAC	MCLENNAN		412

131B

DISCLAIMER: The use of this standard is governed by the "Texas Engineering Practice Act". No warranty of any kind is made by TxDOT for any purpose whatsoever. TxDOT assumes no responsibility for the conversion of this standard to other formats or for incorrect results or damages resulting from its use.

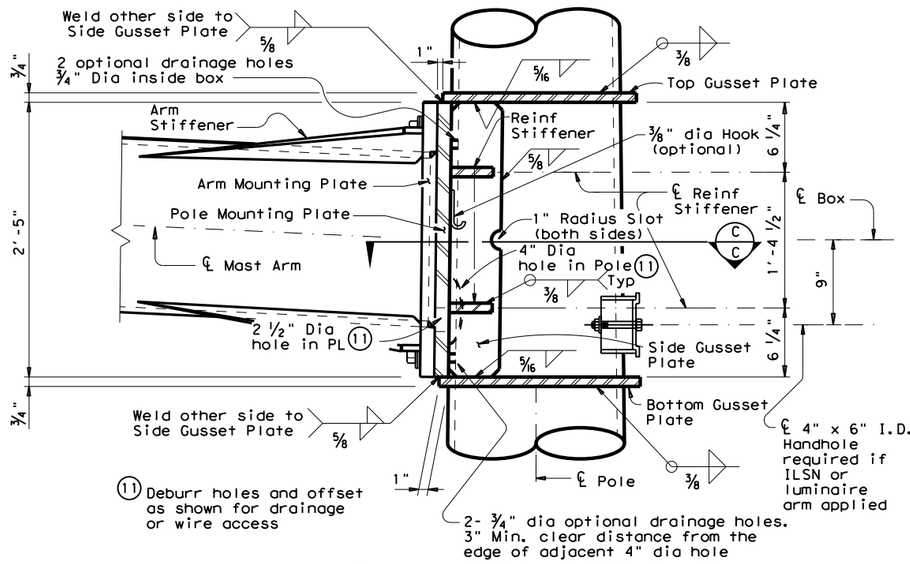

BUILT-UP BOX CONNECTION

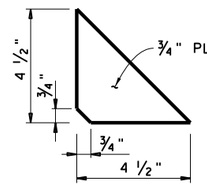

REINFORCING STIFFENER

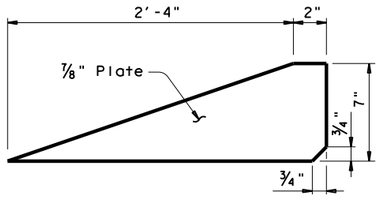

ARM STIFFENER

(Cut to match arm inclination and taper)

Provide Detail shown in SECTION F-F or equivalent 100% complete joint penetration weld from both sides.

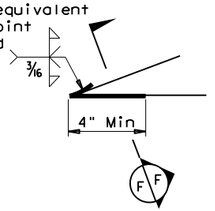

Only 4" length at tip of Arm Stiffener requires a complete joint penetration weld. Smooth weld radius to connect Stiffener. Only a fillet weld is required for the remaining weld length.

DETAIL "K"

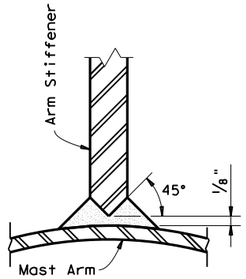

SECTION F-F

Fixed Mount Arm L_F	ROUND POLES (13)					Foundation Type
	D_B	$D_{19.5}$ or $D_{20.25}$	D_{24}	D_{30}	(12) thk	
ft.	in.	in.	in.	in.	in.	
50', 55' 60', 65'	21.0	18.2	17.6	16.8	.3125	48-A

Fixed Mount Arm L_F	ROUND ARMS (13)				
	L_1	D_1	D_2	(12) thk	Rise
ft.	ft.	in.	in.	in.	
50	49	18.5	11.7	.3125	3'- 3"
55	54	18.5	11.0	.3125	3'- 7"
60	59	18.5	10.3	.3125	3'-11"
65	64	18.5	9.6	.3125	4'- 4"

D_B = Pole Base O.D.
$D_{19.5}$ = Pole Top O.D. with no Luminaire and no ILSN (single mast arm)
$D_{20.25}$ = Pole Top O.D. with no Luminaire and no ILSN (dual mast arm)
D_{24} = Pole Top O.D. with ILSN w/out Luminaire
D_{30} = Pole Top O.D. with Luminaire
D_1 = Arm Base O.D.
D_2 = Arm End O.D.
L_1 = Shaft Length
L_F = Fixed Arm Length

(12) Thickness shown is minimum, thicker materials may be used.

(13) Shaft profile 16-sided or 18-sided is considered to be equivalent to round section.

GENERAL NOTES:

Built-up Box Connection: For the welded arm-to-pole connection as a build-up box configuration illustrated here is an example only, fabricators are required to submit a shop drawing of box connection for approval. The drawing shall specify the details of each box element, welds of arm-to-pole connection, arm-to-plate socket connection, and arm rise creation. Specify the proper location of drain holes along the pole. 2 1/2" dia hole in the pole mounting plate and 4" dia hole in the pole need to be aligned for wiring access or drainage. Arm stiffeners cut to match arm inclination and taper shall also be included.

The deviation from flat for either arm or pole mounting plate shall not exceed 1/32 in., which is measured along the center of mounting plate to a radial distance of 13.5 in. The deformed-from-flat connection between arm and pole mounting plates shall not be allowed if the center of both mounting plates cannot contact directly.

Fixed mount details are used for single mast arm assemblies and for the first arm on dual mast arm assemblies.

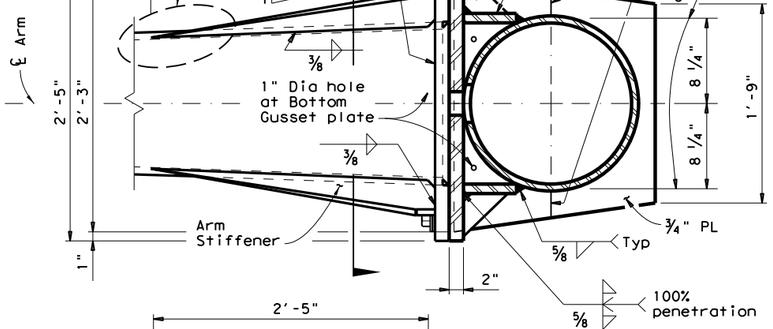

SECTION C-C

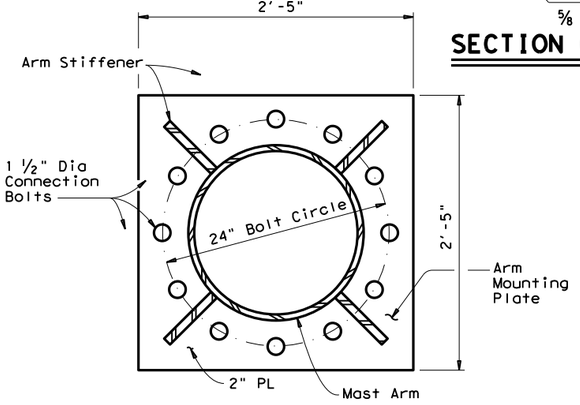

SECTION D-D

NUT ANCHOR (TYPE 2)

ANCHOR BOLT ASSEMBLY

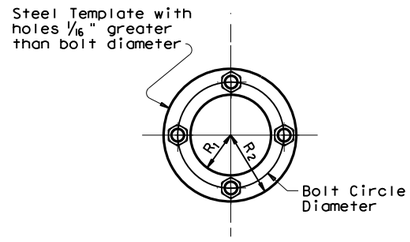

TEMPLATE DETAIL

ANCHOR BOLT & TEMPLATE SIZE						
Bolt Dia in.	Length ‡	Top Thread	Bottom Thread	Bolt Circle	R_2	R_1
2 1/2"	5'-2"	10"	6 1/2"	27"	16"	11"

‡ Min dimension given, longer bolts are acceptable.

FOUNDATION DESIGN TABLE

FDN TYPE	DRILLED SHAFT DIA	REINFORCING STEEL		DRILLED SHAFT LENGTH-ft (16), (17), (18)			ANCHOR BOLT DESIGN (14)				FOUNDATION DESIGN LOAD (15)		TYPICAL APPLICATION
		VERT BARS	SPIRAL & PITCH	TEXAS CONE PENETROMETER N blows/ft			ANCHOR BOLT DIA	Fy (ksi)	BOLT CIR DIA	ANCHOR TYPE	MOMENT K-ft	SHEAR Kips	
				10	15	40							
48-A	48"	20 #9	#4 at 6"	21.9	19.5	14.7	2 1/2"	55	27"	2	490	10	50' to 65' Mast arm assembly.

SEE SHEET "TS-FD" FOR ADDITIONAL DETAILS.

(14) Anchor bolt design develops the foundation capacity given under Foundation Design Loads.

(15) Foundation Design Loads are the allowable moments and shears at the base of the structure.

(16) Field Penetrometer readings at a depth of approximately 3 to 5 feet may be used to adjust shaft lengths.

(17) If rock is encountered, the Drilled Shaft shall extend a minimum of two diameters into solid rock.

(18) Decimal lengths in Design Table are to allow interpolation for other penetrometer values. Round to nearest foot for entry into Summary Table.

Texas Department of Transportation
Traffic Operations Division

TRAFFIC SIGNAL SUPPORT STRUCTURES
LONG MAST ARM ASSEMBLY (50 TO 65 FT) (80 AND 100 MPH WIND ZONE)

Sheet 3 of 5 — LMA(3)-12

©TxDOT July 2000

DN: JSY	CK: ARC	DW: TGG	CK: JSY

REVISIONS
4-20-01
1-12

CONT	SECT	JOB	HIGHWAY
0055	15	072	US 84
DIST	COUNTY		SHEET NO.
WAC	MCLENNAN		413

DATE:
FILE:

131C

DISCLAIMER:
The use of this standard is governed by the "Texas Engineering Practice Act". No warranty of any kind is made by TxDOT for any purpose whatsoever. TxDOT assumes no responsibility for the conversion of this standard to other formats or for incorrect results or damages resulting from its use.

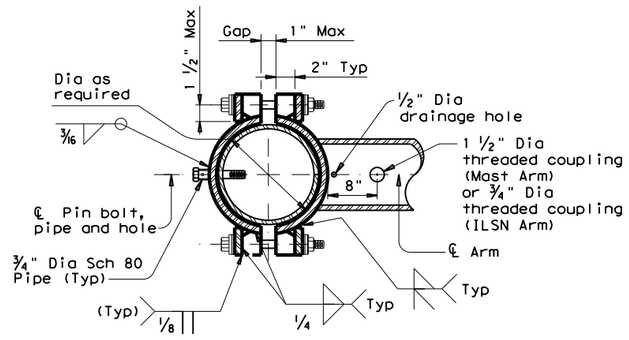

SECTION E-E

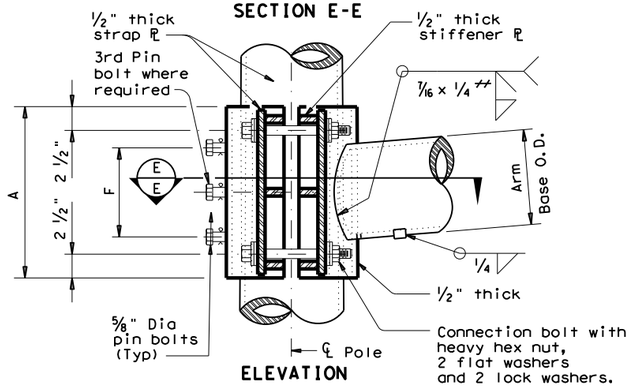

ELEVATION
(Mast Arm or ILSN Arm to pole)

†† = 85% Min. Penetration

CLAMP-ON CONNECTION

80 MPH WIND

Clamp-on Arm Lc	ROUND ARMS					POLYGONAL ARMS				
	L_1	D_1	D_2	thk (12)	Rise	L_1	D_1	D_2	thk (12)	Rise
ft.	ft.	in.	in.	in.		ft.	in.	in.	in.	
20	19.1	6.5	3.8	.179	1'-9"	19.1	7.0	3.5	.179	1'-8"
24	23.1	7.5	4.3	.179	1'-10"	23.1	7.5	3.5	.179	1'-9"
28	27.1	8.0	4.2	.179	1'-11"	27.1	8.0	3.5	.179	1'-10"
32	31.0	9.0	4.7	.179	2'-1"	31.0	9.0	3.5	.179	2'-0"
36	35.0	9.5	4.6	.179	2'-4"	35.0	10.0	3.5	.179	2'-1"
40	39.0	9.5	4.1	.239	2'-8"	39.0	9.5	3.5	.239	2'-3"
44	43.0	10.0	4.1	.239	2'-11"	43.0	10.0	3.5	.239	2'-6"

100 MPH WIND

Clamp-on Arm Lc	ROUND ARMS					POLYGONAL ARMS				
	L_1	D_1	D_2	thk (12)	Rise	L_1	D_1	D_2	thk (12)	Rise
ft.	ft.	in.	in.	in.		ft.	in.	in.	in.	
20	19.1	8.0	5.3	.179	1'-8"	19.1	8.0	3.5	.179	1'-7"
24	23.1	9.0	5.8	.179	1'-9"	23.1	9.0	3.5	.179	1'-8"
28	27.1	9.5	5.7	.179	1'-10"	27.1	10.0	3.5	.179	1'-9"
32	31.0	9.5	5.2	.239	1'-11"	31.0	9.5	3.5	.239	1'-10"
36	35.0	10.0	5.1	.239	2'-0"	35.0	10.0	3.5	.239	1'-11"
40	39.0	10.5	5.1	.239	2'-3"	39.0	11.0	3.5	.239	2'-1"
44	43.0	11.0	5.1	.239	2'-8"	43.0	11.5	4.0	.239	2'-3"

D1 = Arm Base O.D.
D2 = Arm End O.D.
L1 = Shaft Length
Lc = Clamp-on Arm Length

(12) Thickness shown is minimum, thicker materials may be used.

CLAMP-ON ARM CONNECTION

ILSN Arm Size		A	F	4 Conn. Bolts	5/8" Dia. Pin Bolts
Sch 40 pipe Dia	Thick			Dia	No.
in.	in.	in.	in.	in.	ea
3	.216	10	4	¾	2

Mast Arm Size		A	F	4 Conn. Bolts	5/8" Dia. Pin Bolts
Base Dia	Thick			Dia	No.
in.	in.	in.	in.	in.	ea
6.5	.179	12	6	1	2
7.5	.179	14	8	1	2
8.0	.179	14	8	1	2
9.0	.179	16	10	1	2
9.5	.179	18	12	1 ¼	3
9.5	.239	18	12	1 ¼	3
10.0	.239	18	12	1 ¼	3
10.5	.239	18	12	1 ¼	3
11.0	.239	18	12	1 ¼	3
11.5	.239	18	12	1 ¼	3

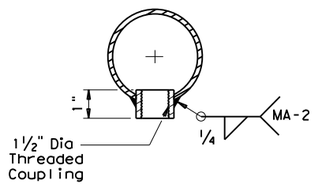

ARM COUPLING DETAIL

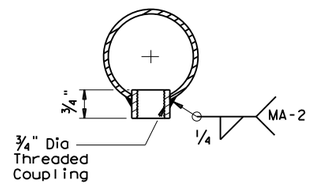

ILSN ARM COUPLING DETAIL

GENERAL NOTES:

Clamp-on details are used for the second arm on dual mast arm assemblies or ILSN arm support. For a clamp-on mast arm, a maximum 1 ½" wide vertical slotted hole may be cut in the front clamp plate to facilitate drainage during galvanizing. The slot shall be centered behind the arm and shall be no longer than the arm diameter minus 1". For an ILSN arm, a 1 ½" diameter hole shall be cut in the front clamp plate for wire access. A matched hole shall be field drilled through the pole to provide wire access after arm is oriented. Deburr both holes.

Where duplicate parts occur on a detail, welds shown for part shall apply to all similar parts on the detail.

Pin bolts are required to prevent rotation of clamp-on arms under design wind forces. Pin bolts shall be ASTM A325 with threads excluded from the shear plane. Pin bolt and ¾" diameter pipe shall have 3/16" diameter holes for a 1/8" diameter galvanized cotter pin. Back clamp plate shall be furnished with a ¾" diameter hole for each pin bolt. An 11/16" diameter hole for each pin bolt shall be field drilled through the pole after arm orientations have been approved by the Engineer.

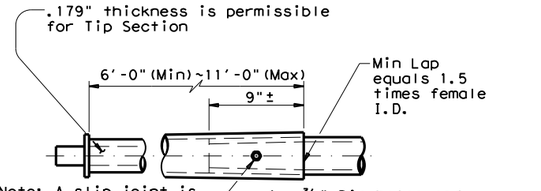

Note: A slip joint is permissible for arms 40' and greater in length. The slip joint shall be made in the shop, but may be match marked and shipped disassembled.

SLIP JOINT DETAIL (CLAMP-ON ARM)

Stainless steel bands (or Cables) and cast bracket as in "Astro-Brac", "Sky Bracket" or "Easy Bracket" with 1 ½" Dia Threaded Coupling.

BRACKET ASSEMBLY

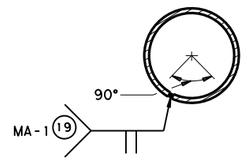

ARM WELD DETAIL

(19) Longitudinal Seam Weld must be oriented within the lower 90° of the signal arm.
60% Min penetration
100% penetration within 6" of circumferential base welds.

Texas Department of Transportation
Traffic Operations Division

TRAFFIC SIGNAL SUPPORT STRUCTURES
LONG MAST ARM ASSEMBLY (50 TO 65 FT) (80 AND 100 MPH WIND ZONE)

Sheet 4 of 5 — LMA(4)-12

© TxDOT November 2000

DN: JK	CK: GRB	DW: FDN	CK: CAL

REVISIONS	CONT	SECT	JOB	HIGHWAY
4-20-01 1-12	005	15	072	US 84
	DIST	COUNTY		SHEET NO.
	WAC	MCLENNAN		414

131D

DATE:
FILE:

DISCLAIMER: The use of this standard is governed by the "Texas Engineering Practice Act". No warranty of any kind is made by TxDOT for any purpose whatsoever. TxDOT assumes no responsibility for the conversion of this standard to other formats or for incorrect results or damages resulting from its use.

DATE:
FILE:

Shipping Parts List

Ship each pole with the following attached: enlarged hand hole, pole cap, fixed arm connection bolts and washers, and any additional hardware listed in the table.

Nominal Arm Length	30' Poles with Luminaire: See note above plus: one (or two if ILSN attached) small hand hole, clamp-on simplex		24' Poles with ILSN: See note above plus one small hand hole		19.50' (Single Mast Arm) 20.25' (Dual Mast Arm) Poles with no Luminaire and no ILSN: See note above	
Single Mast Arm						
Lf ft.	Designation	Quantity	Designation	Quantity	Designation	Quantity
50	50L		50S		50	
55	55L	3	55S		55	1
60	60L	2	60S		60	
65	65L	5	65S		65	2
Dual Mast Arm						
Lf ft. / Lc ft.	Designation	Quantity	Designation	Quantity	Designation	Quantity
50 / 20	5020L		5020S		5020	
50 / 24	5024L		5024S		5024	
50 / 28	5028L		5028S		5028	
50 / 32	5032L		5032S		5032	
50 / 36	5036L		5036S		5036	
50 / 40	5040L		5040S		5040	
50 / 44	5044L		5044S		5044	
55 / 20	5520L		5520S		5520	
55 / 24	5524L		5524S		5524	
55 / 28	5528L		5528S		5528	
55 / 32	5532L		5532S		5532	
55 / 36	5536L		5536S		5536	
55 / 40	5540L		5540S		5540	
55 / 44	5544L		5544S		5544	
60 / 20	6020L		6020S		6020	
60 / 24	6024L		6024S		6024	
60 / 28	6028L		6028S		6028	
60 / 32	6032L		6032S		6032	
60 / 36	6036L		6036S		6036	
60 / 40	6040L		6040S		6040	
60 / 44	6044L		6044S		6044	
65 / 20	6520L		6520S		6520	
65 / 24	6524L		6524S		6524	
65 / 28	6528L		6528S		6528	
65 / 32	6532L		6532S		6532	
65 / 36	6536L		6536S		6536	
65 / 40	6540L		6540S		6540	
65 / 44	6544L		6544S		6544	

Foundation Summary Table **

Location Ident.	Avg. N Blow/ft.	No. Each	Drill Shaft *** Length (feet)
			48-A
CENTERPOINT			
MAST ARM A, B, C	10	3	65.7
LAKE AIR			
MAST ARM A, C	10	2	43.8
TOWNE OAKS			
MAST ARM A, C	10	2	43.8
SUN VALLEY			
MAST ARM A, C	10	2	43.8
VALLEY MILLS			
MAST ARM A, B, C, D	10	4	87.6
Total Drill Shaft Length			284.7

Notes

** Foundations may be listed separately or grouped according to similarity of location and type. Quantities are for the Contractor's information only.

*** Decimal lengths in Design Table are to allow interpolation for other penetrometer values. Round to nearest foot for entry into Summary Table.

Shipping Parts List

Traffic Signal Arms (Fixed Mount) (1 per pole)
Ship each arm with listed equipment attached

Nominal Arm Length	Type IV Arm (4 Signals) 3 Bracket Assembly and 4 CGB Connectors	
ft.	Designation	Quantity
50	50IV	
55	55IV	4
60	60IV	2
65	65IV	7

Luminaire Arms (1 per 30' pole)

Nominal Arm Length	Quantity
8' Arm	10

ILSN Arm (Max. 2 per pole) Ship with clamps, bolts and washers

Nominal Arm Length	Quantity
7' Arm	
9' Arm	

Traffic Signal Arms (80 MPH Clamp-On Mount) (1 per pole) Ship each arm with listed equipment attached

Nominal Arm Length	Type I Arm (1 Signal) 2 CGB connector and 1 clamp w/bolts and washers		Type II Arm (2 Signals) 1 Bracket Assembly and 3 CGB connectors, and 1 clamp w/bolts and washers		Type III Arm (3 Signals) 2 Bracket Assembly and 4 CGB connectors, and 1 clamp w/bolts and washers	
ft.	Designation	Quantity	Designation	Quantity	Designation	Quantity
20	20I-80					
24	24I-80		24II-80			
28	28I-80		28II-80			
32			32II-80		32III-80	
36			36II-80		36III-80	
40					40III-80	
44					44III-80	

Traffic Signal Arms (100 MPH Clamp-On Mount) (1 per pole) Ship each arm with listed equipment attached

Nominal Arm	Type I Arm (1 Signal) 2 CGB connector and 1 clamp w/bolts and washers		Type II Arm (2 Signals) 1 Bracket Assembly and 3 CGB connectors, and 1 clamp		Type III Arm (3 Signals) 2 Bracket Assembly and 4 CGB connectors, and 1 clamp	
ft.	Designation	Quantity	Designation	Quantity	Designation	Quantity
20	20I-100					
24	24I-100		24II-100			
28	28I-100		28II-100			
32			32II-100		32III-100	
36			36II-100		36III-100	
40					40III-100	
44					44III-100	

Anchor Bolt Assemblies (1 per pole)

Anchor Bolt Diameter	Anchor Bolt Length	Quantity
2 1/2 "	5' - 3"	13

Each anchor bolt assembly consists of the following: Top and bottom templates, 4 anchor bolts, 8 nuts, 8 flat washers and 4 nut anchor devices (type 2) per Standard Drawing "TS-FD". Templates may be removed for shipment.

Abbreviations
Lf= Fixed Arm Length
Lc= Clamp-on Arm Length (44' Max.)

STATE OF TEXAS · SCOTT ARNOLD · 96782 · LICENSED · PROFESSIONAL ENGINEER

Scott R Arnold, P.E.
12/21/2020

Texas Department of Transportation
Traffic Operations Division

LONG MAST ARM ASSEMBLY PARTS LIST

LMA(5)-12
Sheet 5 of 5 SHEET 5A OF 5

©TxDOT November 2000

DN: JK	CK: GRB	DW: FDN	CK: CAL

REVISIONS	CONT	SECT	JOB	HIGHWAY
4-20-01	005	515	072	US 84
1-12	DIST	COUNTY		SHEET NO.
	WAC	MCLENNAN		415

131E

DISCLAIMER: The use of this standard is governed by the "Texas Engineering Practice Act". No warranty of any kind is made by TxDOT for any purpose whatsoever. TxDOT assumes no responsibility for the conversion of this standard to other formats or for incorrect results or damages resulting from its use.

DATE:
FILE:

Shipping Parts List

Ship each pole with the following attached: enlarged hand hole, pole cap, fixed arm connection bolts and washers, and any additional hardware listed in the table.

Nominal Arm Length	30' Poles with Luminaire: See note above plus: one (or two if ILSN attached) small hand hole, clamp-on simplex		24' Poles with ILSN: See note above plus one small hand hole		19.50' (Single Mast Arm) 20.25' (Dual Mast Arm) Poles with no Luminaire and no ILSN: See note above	
Single Mast Arm						
Lf ft.	Designation	Quantity	Designation	Quantity	Designation	Quantity
50	50L	1	50S		50	
55	55L	2	55S		55	1
60	60L	1	60S		60	
65	65L		65S		65	1

Dual Mast Arm

Lf ft.	Lc ft.	Designation	Quantity	Designation	Quantity	Designation	Quantity
50	20	5020L		5020S		5020	
	24	5024L		5024S		5024	
	28	5028L		5028S		5028	
	32	5032L		5032S		5032	
	36	5036L		5036S		5036	
	40	5040L		5040S		5040	
	44	5044L		5044S		5044	
55	20	5520L		5520S		5520	
	24	5524L		5524S		5524	
	28	5528L		5528S		5528	
	32	5532L		5532S		5532	
	36	5536L		5536S		5536	
	40	5540L		5540S		5540	
	44	5544L		5544S		5544	
60	20	6020L		6020S		6020	
	24	6024L		6024S		6024	
	28	6028L		6028S		6028	
	32	6032L		6032S		6032	
	36	6036L		6036S		6036	
	40	6040L		6040S		6040	
	44	6044L		6044S		6044	
65	20	6520L		6520S		6520	
	24	6524L		6524S		6524	
	28	6528L		6528S		6528	
	32	6532L		6532S		6532	
	36	6536L		6536S		6536	
	40	6540L		6540S		6540	
	44	6544L		6544S		6544	

Foundation Summary Table **

Location Ident.	Avg. N Blow/ft.	No. Each	Drill Shaft *** Length (feet)
			48-A
18TH			
MAST ARM C	10	1	21.9
4TH			
MAST ARM B	10	1	21.9
GARRISON			
MAST ARM A, C	10	2	43.8
CLIFTON			
MAST ARM C	10	1	21.9
DALLAS			
MAST ARM A	10	1	21.9
Total Drill Shaft Length			131.4

Notes

** Foundations may be listed separately or grouped according to similarity of location and type. Quantities are for the Contractor's information only.

*** Decimal lengths in Design Table are to allow interpolation for other penetrometer values. Round to nearest foot for entry into Summary Table.

Shipping Parts List

Traffic Signal Arms (Fixed Mount) (1 per pole)
Ship each arm with listed equipment attached

Nominal Arm Length	Type IV Arm (4 Signals) 3 Bracket Assembly and 4 CGB Connectors	
ft.	Designation	Quantity
50	50IV	1
55	55IV	3
60	60IV	1
65	65IV	1

Luminaire Arms (1 per 30' pole)

Nominal Arm Length	Quantity
8' Arm	3

ILSN Arm (Max. 2 per pole) Ship with clamps, bolts and washers

Nominal Arm Length	Quantity
7' Arm	
9' Arm	

Traffic Signal Arms (80 MPH Clamp-On Mount) (1 per pole) Ship each arm with listed equipment attached

Nominal Arm Length	Type I Arm (1 Signal) 2 CGB connector and 1 clamp w/bolts and washers		Type II Arm (2 Signals) 1 Bracket Assembly and 3 CGB connectors, and 1 clamp w/bolts and washers		Type III Arm (3 Signals) 2 Bracket Assembly and 4 CGB connectors, and 1 clamp w/bolts and washers	
ft.	Designation	Quantity	Designation	Quantity	Designation	Quantity
20	20I-80					
24	24I-80		24II-80			
28	28I-80		28II-80			
32			32II-80		32III-80	
36			36II-80		36III-80	
40					40III-80	
44					44III-80	

Traffic Signal Arms (100 MPH Clamp-On Mount) (1 per pole) Ship each arm with listed equipment attached

Nominal Arm	Type I Arm (1 Signal) 2 CGB connector and 1 clamp w/bolts and washers		Type II Arm (2 Signals) 1 Bracket Assembly and 3 CGB connectors, and 1 clamp		Type III Arm (3 Signals) 2 Bracket Assembly and 4 CGB connectors, and 1 clamp	
ft.	Designation	Quantity	Designation	Quantity	Designation	Quantity
20	20I-100					
24	24I-100		24II-100			
28	28I-100		28II-100			
32			32II-100		32III-100	
36			36II-100		36III-100	
40					40III-100	
44					44III-100	

Anchor Bolt Assemblies (1 per pole)

Anchor Bolt Diameter	Anchor Bolt Length	Quantity
2 1/2 "	5' - 3"	6

Each anchor bolt assembly consists of the following: Top and bottom templates, 4 anchor bolts, 8 nuts, 8 flat washers and 4 nut anchor devices (type 2) per Standard Drawing "TS-FD". Templates may be removed for shipment.

Abbreviations
Lf= Fixed Arm Length
Lc= Clamp-on Arm Length (44' Max.)

STATE OF TEXAS · SCOTT R. ARNOLD · 96782 · LICENSED · PROFESSIONAL ENGINEER

Scott R Arnold, P.E.
12/21/2020

Texas Department of Transportation
Traffic Operations Division

LONG MAST ARM ASSEMBLY PARTS LIST

LMA(5)-12
Sheet 5 of 5 SHEET 5B OF 5

© TxDOT November 2000

DN: JK	CK: GRB	DW: FDN	CK: CAL

REVISIONS
4-20-01
1-12

CONT	SECT	JOB	HIGHWAY
005	15	072	US 84
DIST	COUNTY		SHEET NO.
WAC	MCLENNAN		416

131E

DISCLAIMER:
The use of this standard is governed by the "Texas Engineering Practice Act". No warranty of any kind is made by TxDOT for any purpose whatsoever. TxDOT assumes no responsibility for the conversion of this standard to other formats or for incorrect results or damages resulting from its use.

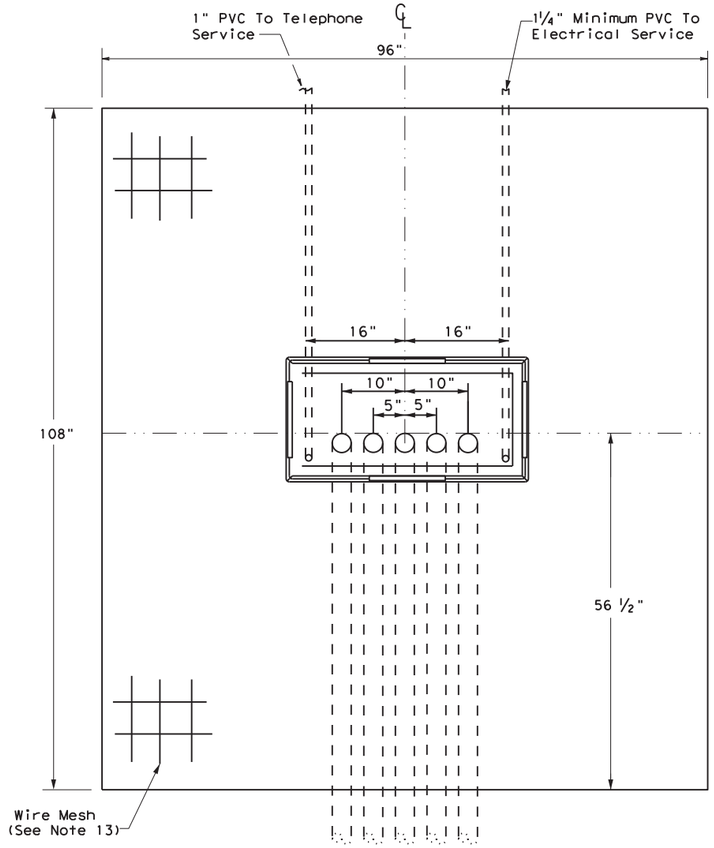

TOP VIEW

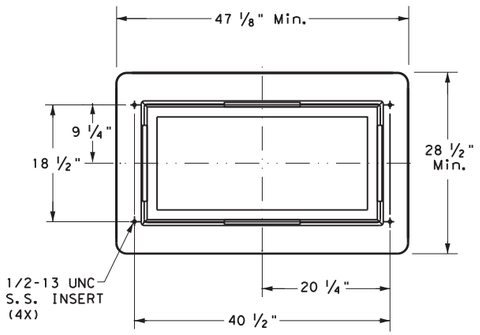

CABINET BASE

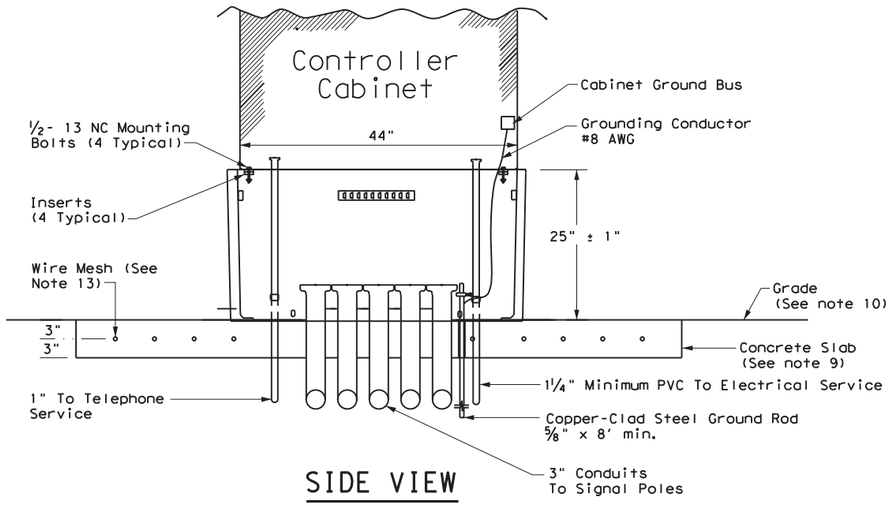

SIDE VIEW

TRAFFIC SIGNAL CONTROLLER BASE:

1. Provide a traffic signal controller base (cabinet base) manufactured of polymer concrete material consisting of calcareous and siliceous stone; glass fibers and thermoset polyester resin. The polymer concrete cabinet base must be reinforced on the inside of the cabinet base with fiberglass matting. Provide one of the following bases: Armorcast Part # A6001848X24, Quazite Model # PG3048Z709, or other as approved by TxDOT Traffic Safety Division.

2. The polymer concrete material must have a minimum compressive strength of 10,300 pounds per square inch (psi), minimum flexural strength of 3600 psi, and minimum shear strength of 3600 psi.

3. The polymer concrete cabinet base must conform to the dimensions shown and must accommodate a standard TxDOT basemount cabinet.

4. Supply the cabinet base with four 1#2"-13 UNC stainless steel inserts for attachment of the cabinet to the base. Inserts must withstand a minimum torque of 50 ft-lb and a minimum straight pull out strength of 750 lbs.

5. Provide the cabinet base with 4 cable racks mounted one on each side of the base 2" to 7 " from the top edge of the base. Unless approved otherwise, cable racks must be 1-1/2 x 9#16x 3#16inch steel channel with eight T-slots spaced at 1-1/2 inches. The cable racks must easily accommodate the insertion of tie wraps to attach field wiring to the racks to serve as strain relief. Secure cable racks to the base using 1#2"-13 UNC stainless steel screws and inserts.

6. The cabinet base, when secured to the concrete slab with controller cabinet attached, must withstand a minimum wind load of 125 mph or a 850 lb force applied at 49" above the bottom of the base without causing the base or cabinet to come out of their anchored position or cause any permanent deformation. The manufacturer must supply certification by an independent testing laboratory or sealed by a Texas Licensed Professional Engineer. Provide the cabinet base with hardware for attachment to a concrete slab.

7. The traffic signal base must be permanently marked either by impress or by permanent ink with the manufacturer's model number and name or logo.

8. Seal the base to the concrete with a silicone caulk bead and fastened to the slab per manufacturer's instructions.

CONCRETE SLAB:

9. Traffic signal controller pad must be a portland cement concrete slab poured in place, must conform to the dimensions shown, and must be level.

10. Grade earthwork such that it is flush with the concrete pad on all four sides, unless otherwise shown on the plans. Subsidiary to ITEM 680, four inch rip rap may be used in lieu of earthwork. Slopes shall gradually contour to match plans.

11. Bond a #8 AWG copper ground wire and an 8 ft ground rod bonded to the reinforcing mesh by a suitable UL Listed clamp and terminated to the cabinet grounding bus for the purpose of providing a local ground for the electrical grounding conductor. The electrical grounding conductor specified in Item 680-3.A.4 is required and must be terminated to the cabinet ground bus.

12. Install a PVC sleeve to prevent the ground rod from direct embedment in the slab.

13. Provide welded wire mesh 6X6-W2.9 X W2.9 for reinforcement. Provide joints and splices in the mesh with a minimum 6-inch overlap. Center the mesh between top and bottom and provide a minimum 3 inch cover on the edges.

14. Provide Class B concrete minimum for the slab in accordance with Item 421. Construct the slab in accordance with Item 531.

CONDUITS:

15. Stub up and run 3-inch conduits through the slab to the various traffic signal poles and ground boxes as shown on the layouts. Install the number of conduits as shown on layouts plus two additional 3 inch conduits for future use. Terminate the conduits with a bushing between 2 and 4-inches above the slab.

16. Extend conduits for future use at least 18-inches from the edge of the slab, terminate underground with a coupling, and cap and seal so that the seal can be removed without damaging the coupling. This must also apply to unused telephone conduit.

17. Stub up two separate conduits through the slab from the electrical and telephone services. Run the conduit for the electrical feed directly to the electrical service enclosure. Run the conduit for the telephone line directly to the telephone service, usually located on the same pole as the electrical service. Telephone must not under any circumstance share a conduit with any other function.

18. Terminate electric and telephone conduits above the slab with a coupling. After the base is installed, extend the conduits above the top of the base and secure to the base using a steel one-hole strap or similar suitable substitute.

CONTROLLER CABINET:

19. Anchor the controller cabinet to the base using four stainless steel 1/2-13 NC bolts.

20. The silicone caulk bead specified in Item 680.3.B must be RTV 133.

PAYMENT:

21. Bid TS-CF as subsidiary to Item 680.

Texas Department of Transportation

Traffic Safety Division Standard

TRAFFIC SIGNAL CONTROLLER CABINET BASE AND PAD

TS-CF-21

FILE: ts-cf-21.dgn	DN:	CK:	DW:	CK:
© TxDOT October 2000	CONT	SECT	JOB	HIGHWAY
REVISIONS	005	15	072	US 84
12-04	DIST	COUNTY		SHEET NO.
2-21	WAC	MCLENNAN		417

DATE: DATE TIME
FILE: DOCUMENT NAME

DISCLAIMER:
The use of this standard is governed by the "Texas Engineering Practice Act". No warranty of any kind is made by TxDOT for any purpose whatsoever. TxDOT assumes no responsibility for the conversion of this standard to other formats or for incorrect results or damages resulting from its use.

DATE:
FILE:

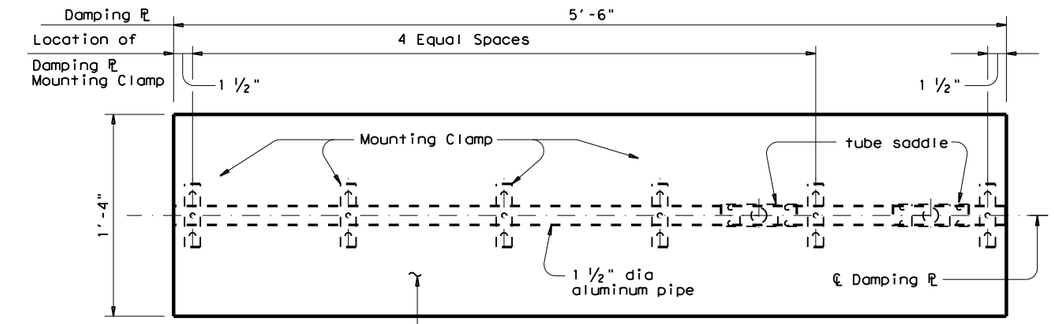

PLAN

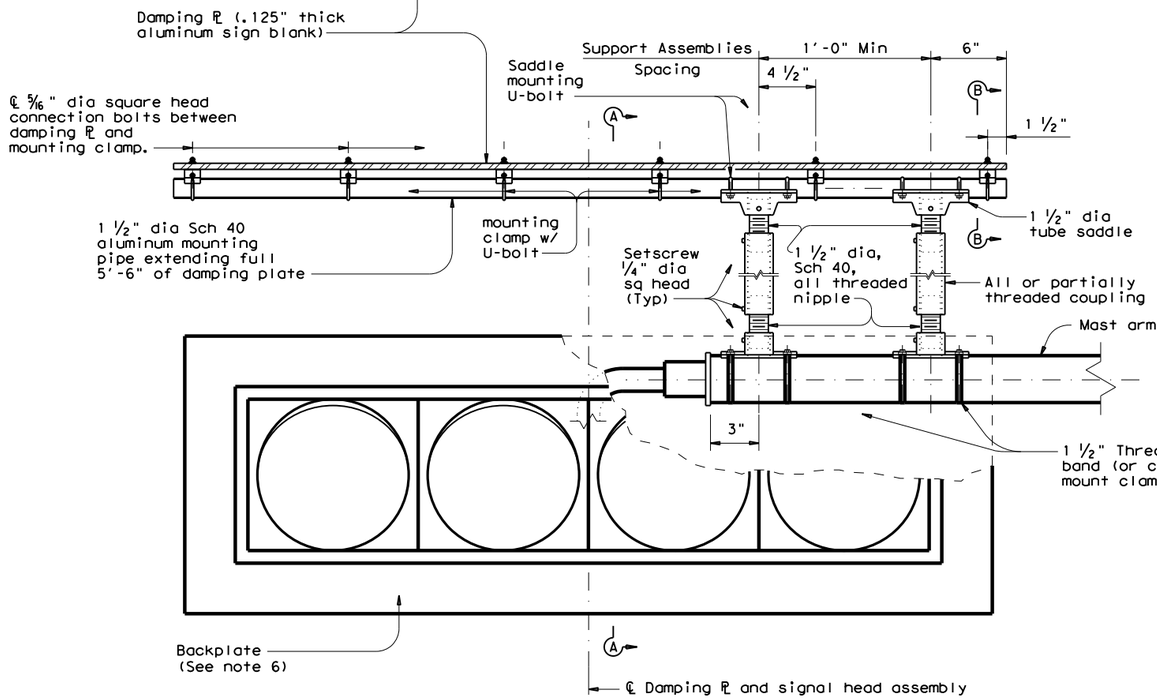

ELEVATION

DAMPING PLATE MOUNTING DETAILS

(Showing alternate placement of signal head)

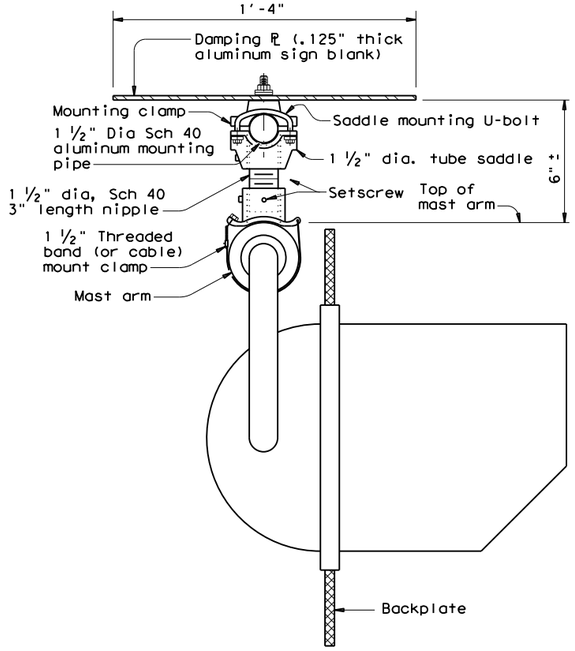

SECTION A-A

(Showing standard placement of signal head)

(Mounting clamp U-bolt is not shown for clarity)

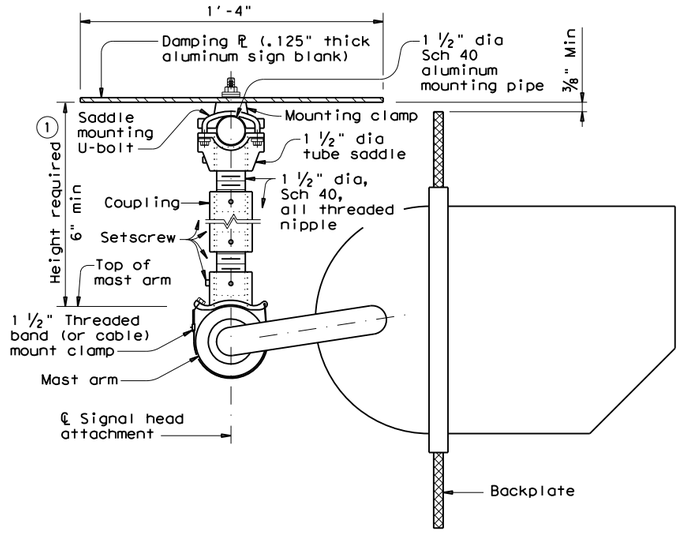

SECTION A-A

(Showing alternate placement of signal head)

(Mounting clamp U-bolt is not shown for clarity)

① Recommended supporting assemblies to achieve required height for horizontal section heads			
Height required	One nipple each length	Two nipples each length plus	One coupling each length
6"-6 ¾"	3"	-	-
7"-8 ½"	4"	-	-
9"-10 ½"	6"	-	-
11"-15 ½"	-	4"	5"
16"-24"	-	6"	10"

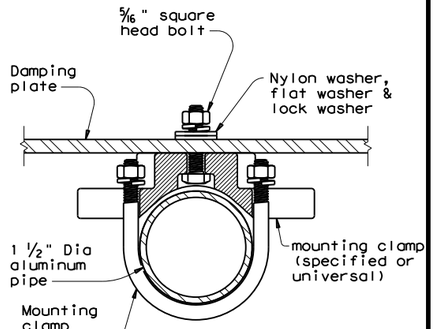

SECTION B-B

(Showing damping plate attachment)

GENERAL NOTES:

1. In accordance with the findings of TxDOT sponsored research, the installation of a damping plate in accordance with the details shown here at the end of signal mast arms of SMA and DMA standard structures reduces excessive harmonic vertical vibration, and thus fatigue damage. Any deviation from these details may reduce the effectiveness of this damping device.
2. Aluminum sign blank for damping plate will conform to Departmental Material Specifications DMS-7110. Materials for mast arm mounting clamp and tube saddle will be aluminum castings or aluminum alloys as in accordance with manufacturers' stipulations. Mounting pipe, pipe nipple and coupling will be aluminum alloy 6061-T6 or 6063-T6. Damping plate mounting clamp and u-bolt assemblies will conform to Standard sheet SMD(GEN). U-bolts for saddle mounting will have a minimum yield strength of 36 ksi.
3. Damping plate will be mounted horizontally. Position centerline of damping plate to align with centerline of mast arm or horizontal signal head assembly. Vertical clearance between signal head (with or without backing plate)and bottom of damping plate will be maintained as shown. The attachments shown here are examples only, other supporting details which meet both alignment and vertical clearance requirements are also acceptable.
4. Unless stipulated by the manufacturers, all steel parts will be galvanized finish in accordance with Standard Specification Item 445, "Galvanizing".
5. Contractor will verify applicable field dimensions before the installation.
6. Backplates are optional for traffic signals. When backplates are used, Backplates will have a 2-inch fluorescent yellow AASHTO Type B_{FL} or C_{FL} retroreflective border conforming to TxDOT DMS-8300 "Sign Face Materials." See Sheet TS-BP-20 for backplate details.

Texas Department of Transportation

Traffic Safety Division Standard

MAST ARM DAMPING PLATE DETAILS

MA-DPD-20

FILE: ma-dpd-20.dgn	DN: TxDOT	CK: TxDOT	DW: TxDOT	CK: TxDOT
©TxDOT January 2012	CONT	SECT	JOB	HIGHWAY
REVISIONS	005	15	072	US 84
6-20	DIST	COUNTY		SHEET NO.
	WAC	MCLENNAN		418

DISCLAIMER:
The use of this standard is governed by the "Texas Engineering Practice Act". No warranty of any kind is made by TxDOT for any purpose whatsoever. TxDOT assumes no responsibility for the conversion of this standard to other formats or for incorrect results or damages resulting from its use.

DATE:
FILE:

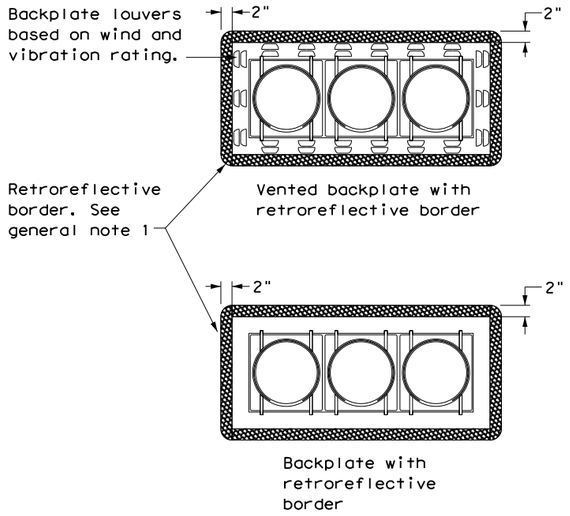

THREE-SECTION HEAD
HORIZONTAL OR VERTICAL

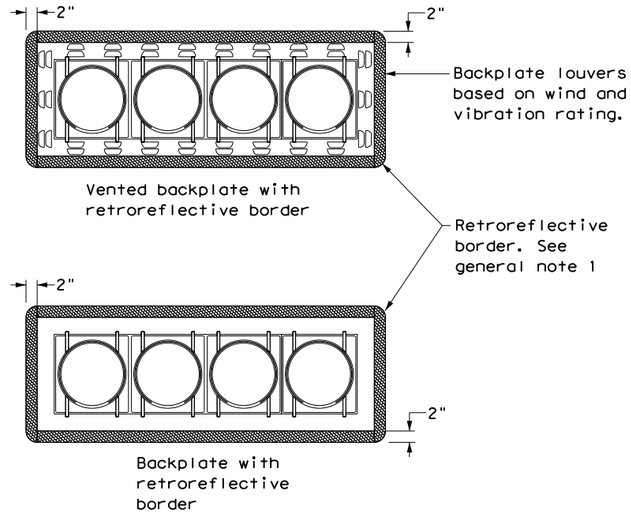

FOUR-SECTION HEAD
HORIZONTAL OR VERTICAL

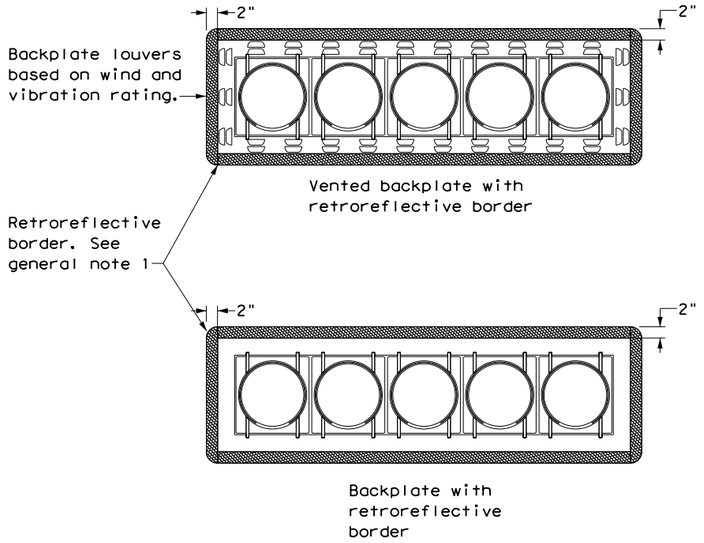

FIVE-SECTION HEAD
HORIZONTAL OR VERTICAL

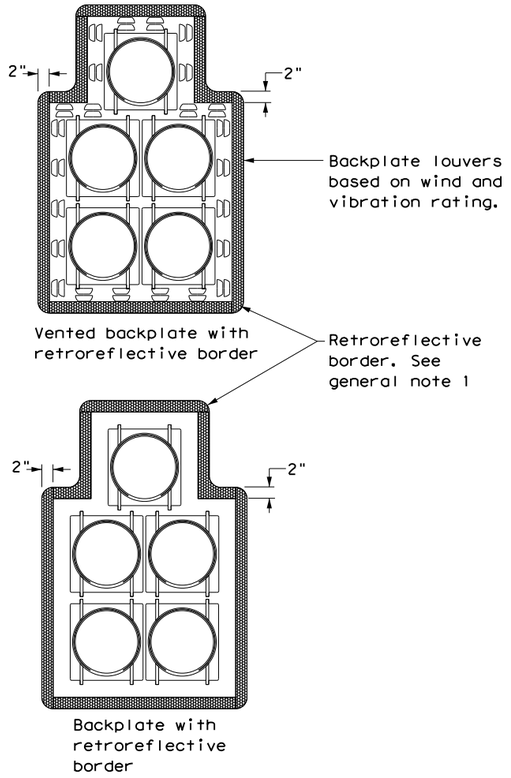

FIVE-SECTION HEAD
CLUSTER

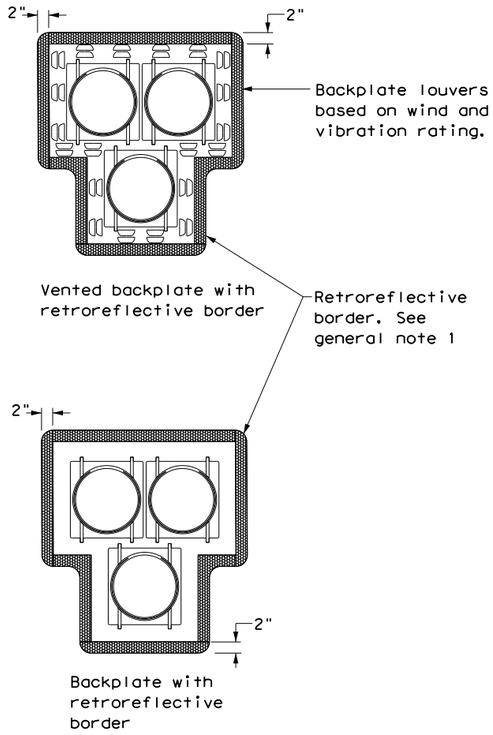

PEDESTRIAN HYBRID
BEACON

GENERAL NOTES:

1. Backplates are optional for traffic signals and pedestrian hybrid beacons. When backplates are used, a 2-inch wide fluorescent yellow AASHTO Type B_{FL} or C_{FL} retroreflective border conforming to TxDOT DMS-8300 is required. Place on all approaches when used.
2. Signal head and backplate compatability must be verified by the contractor prior to installation.
3. When using backplates on signal heads, venting is preferred to reduce cyclic vibration stress.
4. When a vented backplate is used, the retroreflective border must not be placed over the louvers.
5. This standard sheet applies to all signal heads with backplates, including but not limited to:
   - Pole mounted
   - Overhead mounted
   - Span wire mounted
   - Mast arm mounted
   - Vertical signal heads
   - Horizontal signal heads
   - Clustered signal heads
   - Pedestrian hybrid beacons

Texas Department of Transportation

Traffic Safety Division Standard

TRAFFIC SIGNAL HEAD WITH BACKPLATE

TS-BP-20

FILE: ts-bp-20.dgn	DN: TxDOT	CK: TxDOT	DW: TxDOT	CK: TxDOT
© TxDOT June 2020	CONT	SECT	JOB	HIGHWAY
REVISIONS	005	515	072	US 84
	DIST	COUNTY		SHEET NO.
	WAC	MCLENNAN		419

DISCLAIMER:
The use of this standard is governed by the "Texas Engineering Practice Act". No warranty of any kind is made by TxDOT for any purpose whatsoever. TxDOT assumes no responsibility for the conversion of this standard to other formats or for incorrect results or damages resulting from its use.

DATE:
FILE:

GENERAL NOTES FOR ALL ELECTRICAL WORK

1. The location of all conduits, junction boxes, ground boxes, and electrical services is diagrammatic and may be shifted to accommodate field conditions.

2. Provide new and unused materials. Ensure that all materials and installations comply with the applicable articles of the National Electrical Code (NEC), TxDOT standards and specifications, National Electrical Manufacturers Association (NEMA), and are listed by Underwriters Laboratories (UL) or a Nationally Recognized Testing Lab (NRTL). NRTLs such as Canadian Standard Association (CSA), Intertek Testing Services NA Inc., or FM Approvals LLC can be considered equivalent to UL. Where reference is made to NEMA listed devices, International Electrotechnical Commission (IEC) listed devices will not be considered an acceptable equal to a NEMA listed device. Acceptable devices may have both a NEMA and IEC listing. Faulty fabrication or poor workmanship in any material, equipment, or installation is justification for rejection. Replace or reinstall rejected material or equipment at no additional cost to the Department.

3. Miscellaneous nuts, bolts and hardware, except for high strength bolts, may be stainless steel when plans specify galvanized, provided the bolt size is ½ in. or less in diameter.

4. Provide the following test equipment as required by the Engineer to confirm compliance with the contract and the NEC: voltmeter, ammeter, megohm meter (1000 volt DC), ground resistance tester, torque wrenches, and torque screwdrivers. Ensure all equipment has been properly calibrated within the last year. Provide calibration certification to the Engineer upon request. Operate test equipment during inspection as requested by the Engineer.

5. Install grounding as shown on the plans and in accordance with the NEC. Ensure all metallic conduits; metal poles; luminaires; and metal enclosures are bonded to the equipment grounding conductor. Provide stranded bare copper or green insulated grounding conductors. Ground rods, connectors, and bonding jumpers are subsidiary to the various bid items.

6. When required by the Engineer, notify the Department in writing of materials from the Material Producers List (MPL) intended for use on each project. Prequalified materials are listed on the MPL on TxDOT's website under "Roadway Illumination and Electrical Supplies." No substitutions will be allowed for materials on this list.

CONDUIT

A. MATERIALS

1. Provide conduit, junction boxes, fittings, and hardware as per TxDOT Departmental Material Specification (DMS) 11030 "Conduit" and Item 618 "Conduit" of TxDOT's "Standard Specifications For Construction And Maintenance Of Highways, Streets, And Bridges," latest edition. Provide conduits listed under Item 618 on the MPL under "Roadway Illumination and Electrical Supplies." Provide conduit types according to the descriptive code or as shown on the plans. Do not substitute other types of conduits for those shown. Provide liquidtight flexible metal conduit (LFMC) when flexible conduit is called for on galvanized steel rigid metallic conduit (RMC) systems. Provide liquidtight flexible nonmetallic conduit (LFNC) when flexible conduit is called for on polyvinyl chloride (PVC) systems.

2. Provide galvanized steel RMC for all exposed conduits, unless otherwise shown on the plans. Properly bond all metal conduits.

3. Unless otherwise shown on the plans, provide junction boxes with a minimum size as shown in the following table, which applies to the greatest number of conductors entering the box through one conduit with no more than four conduits per box. When a mixture of conductor sizes is present, count the conductors as if all are of the larger size. For situations not applicable to the table, size junction boxes in accordance with NEC.

AWG	3 CONDUCTORS	5 CONDUCTORS	7 CONDUCTORS
#1	10" x 10" x 4"	12" x 12" x 4"	16" x 16" x 4"
#2	8" x 8" x 4"	10" x 10" x 4"	12" x 12" x 4"
#4	8" x 8" x 4"	10" x 10" x 4"	10" x 10" x 4"
#6	8" x 8" x 4"	8" x 8" x 4"	10" x 10" x 4"
#8	8" x 8" x 4"	8" x 8" x 4"	8" x 8" x 4"

4. Junction boxes with an internal volume of less than 100 cu. in. and supported by entering raceways must have threaded entries or hubs identified for the intended purpose and supported by connection of two or more rigid metal conduits. Secure conduit within 3 ft. of the enclosure or within 18 in. of the enclosure if all conduit entries are on the same side. Mechanically secure all junction boxes with an internal volume greater than 100 cu. inches.

5. Provide hot dipped galvanized cast iron or sand cast aluminum outlet boxes for junction boxes containing only 10 AWG or 12 AWG conductors. Do not use die cast aluminum boxes. Size outlet boxes according to the NEC.

6. Do not use intermediate metal conduit (IMC) or electrical metallic tubing (EMT) unless specifically required by the plan sheets. When EMT is called for, provide junction boxes made from galvanized steel sheeting, listed and approved for outdoor use, unless otherwise noted on the plans. Size all galvanized steel junction boxes in accordance with the NEC. Provide junction boxes for IMC conduit systems that meet the same requirements for junction boxes used with RMC systems.

7. Provide PVC junction boxes intended for outdoor use on PVC conduit systems, unless otherwise noted on the plans.

8. Provide PVC elbows in PVC conduit systems, unless otherwise shown on the plans. Use only a flat, high tensile strength polyester fiber pull tape for pulling conductors through the PVC conduit system. When galvanized steel RMC elbows are specifically called for in the plans and any portion of the RMC elbow is buried less than 18 in., ground the RMC elbow by means of a grounding bushing on a rigid metal extension. Grounding of the rigid metal elbow is not required if the entire RMC elbow is encased in a minimum of 2 in. of concrete. PVC extensions are allowed on these concrete encased rigid metal elbows. RMC or PVC elbows are subsidiary to various bid items.

9. When required, provide High-Density Polyethylene (HDPE) conduit with factory installed internal conductors according to Item 622 "Duct Cable." At the Contractor's request and with approval by the Engineer, substitute HDPE conduit with no conductors for bored schedule 40 or schedule 80 PVC conduit bid under Item 618. Ensure bored HDPE substituted for PVC is schedule 40 and of the same size PVC called for in the plans. Ensure the substituted HDPE meets the requirements of Item 622, except that the conduit is supplied without factory-installed conductors. Make the transition of the HDPE conduit to PVC (or RMC elbow when required) at the bore pit. Provide conduit of the size and schedule as shown on the plans. Do not extend substituted conduit into ground boxes or foundations. Provide PVC or galvanized steel RMC elbows as called for at all ground boxes and foundations.

10. Use two-hole straps when supporting 2 in. and larger conduits. On electrical service poles, properly sized stainless steel or hot dipped galvanized one-hole standoff straps are allowed on the service riser conduit.

B. CONSTRUCTION METHODS

1. Provide and install expansion joint conduit fittings on all structure-mounted conduits at the structure's expansion joints to allow for movement of the conduit. In addition, provide and install expansion joint fittings on all continuous runs of galvanized steel RMC conduit externally exposed on structures such as bridges at maximum intervals of 150 ft. When requested by the project Engineer, supply manufacturer's specification sheet for expansion joint conduit fittings. Repair or replace expansion joint fittings that do not allow for movement at no additional cost to the Department. Provide the method of determining the amount of expansion to the Engineer upon request. Do not use LFMC or LFNC as a substitute for the required expansion conduit fittings.

2. Space all conduit supports at maximum intervals of 5 ft. Install conduit spacers when attaching metal conduit to surface of concrete structures. See "Conduit Mounting Options" on ED(2). Install conduit support within 3 ft. of all enclosures and conduit terminations.

3. Do not attach conduit supports directly to pre-stressed concrete beams except as shown specifically in the plans or as approved by the Engineer.

4. Unless otherwise shown on the plans, jack or bore conduit placed beneath existing roadways, driveways, sidewalks, or after the base or surfacing operation has begun. Backfill and compact the bore pits below the conduit per Item 476 "Jacking, Boring, or Tunneling Pipe or Box" prior to installing conduit or duct cable to prevent bending of the connections.

5. When placing conduit in the sub-grade of new roadways, backfill all trenches with excavated material unless otherwise noted on the plans. When placing conduit in the sub-base of new roadways, backfill all trenches with cement-stabilized base as per requirements of Items 110 "Excavation", 400 "Excavation and Backfill for Structures", 401 "Flowable Backfill", 402 "Trench Excavation Protection", and 403 "Temporary Special Shoring."

6. Provide and place warning tape approximately 10 in. above all trenched conduit as per Item 618.

7. During construction, temporarily cap or plug open ends of all conduit and raceways immediately after installation to prevent entry of dirt, debris and animals. Temporary caps constructed of durable duct tape are allowed. Tightly fix the tape to the conduit opening. Clean out the conduit and prove it clear in accordance with Item 618 prior to installing any conductors.

8. Ensure conduit entry into the top of any enclosure is waterproof by installing conduit sealing hubs or using boxes with threaded bosses. This includes surface mounted safety switches, meter cans, service enclosures, auxiliary enclosures and junction boxes. Grounding bushings on water tight sealing hubs are not required.

9. Fit the ends of all PVC conduit terminations with bushings or bell end fittings. Provide and install a grounding type bushing on all metal conduit terminations.

10. Install a bonding jumper from each grounding bushing to the nearest ground rod, grounding lug, or equipment grounding conductor. Ensure all bonding jumpers are the same size as the equipment grounding conductor. Bonding of conduit used as a casing under roadways for duct cable is not required, if the duct extends the full length through the casing.

11. At all electrical services, install a 6 AWG solid copper grounding electrode conductor.

12. Place conduits entering ground boxes so that the conduit openings are between 3 in. and 6 in. from the bottom of the box. See the ground box detail on sheet ED(4).

13. Seal ends of all conduits with duct seal, expandable foam, or by other methods approved by the Engineer. Seal conduit immediately after completion of conductor installation and pull tests. Do not use duct tape as a permanent conduit sealant. Do not use silicone caulk as a conduit sealant.

14. File smooth the cut ends of all mounting strut and conduit. Before installing, paint the field cut ends of all mounting strut and RMC (threaded or non-threaded) with zinc rich paint (94% or more zinc content) to alleviate overspray. Use zinc rich paint to touch up galvanized material as allowed under Item 445 "Galvanizing." Do not paint non-galvanized material with a zinc rich paint as an alternative for materials required to be galvanized.

Texas Department of Transportation

Traffic Operations Division Standard

ELECTRICAL DETAILS CONDUITS & NOTES

ED(1)-14

FILE:	ed1-14.dgn	DN:	CK:	DW:	CK:
© TxDOT	October 2014	CONT	SECT	JOB	HIGHWAY
REVISIONS		005	15	072	US 84
		DIST	COUNTY		SHEET NO.
		WAC	MCLENNAN		420

71A

DISCLAIMER:
The use of this standard is governed by the "Texas Engineering Practice Act". No warranty of any kind is made by TxDOT for any purpose whatsoever. TxDOT assumes no responsibility for the conversion of this standard to other formats or for incorrect results or damages resulting from its use.

DATE:
FILE:

ELECTRICAL CONDUCTORS

A. MATERIAL INFORMATION

1. Provide Type XHHW insulated conductors in accordance with Departmental Material Specification (DMS)11040 "Conductors" and Item 620 "Electrical Conductors." Provide conductors as listed on the Material Producers List (MPL) on the Department web site under "Roadway Illumination and Electrical Supplies" Item 620. Color code insulated conductors in conformance with the NEC. Identify grounded (neutral) conductors with white insulation. Identify grounding conductors (ground wires) with green insulation or bare conductors. Identify ungrounded (hot) conductors with any color insulation except green, white, or gray. Keep color scheme consistent throughout the wiring system. Identify conductors 6 American Wire Gauge (AWG) and smaller by continuous color jacket. Identify electrical conductors 4 AWG and larger by continuous color jacket or by colored tape. When identifying conductors with colored tape, mark at least 6 in. of the conductor's insulation with half laps of tape.

2. Provide a solid copper 6 AWG grounding electrode conductor to bond the electrical service equipment to the concrete encased grounding electrode or the ground rod at the service location. Connect the grounding electrode conductor to the ground rod with a UL listed connector in accordance with DMS 11040. Connect the grounding electrode conductor to the concrete encased grounding electrode as shown in the plans.

3. Where two or more circuits are present in one conduit or enclosure, permanently identify the conductors of each branch circuit by attaching a non-metallic tag around both circuit conductors at each accessible location. Provide tags with two straps, large enough to indicate circuit number, letter, or other identification as shown in the plans. Print circuit identification on the tag with a permanent marker.

4. Use listed compression or screw type pressure connectors, terminal blocks, or split bolt connectors for splicing as specified in DMS 11040. Use hot melt adhesive tape to fill the gap and seal the ends of heat shrink tubing. Provide UL listed gel-filled insulating splice covers. Splicing materials, insulating materials, breakaway disconnects, splice covers, and fuse holders are subsidiary to various bid items.

B. CONSTRUCTION METHODS

1. Use only a flat, high tensile strength polyester fiber pull tape for pulling conductors through the conduit system. After installing conductors in conduit, perform conductor pull test. If a conductor cannot be freely pulled, make any needed alterations or repairs at no additional cost to the department. Perform insulation resistance tests in accordance with Item 620. Coordinate with the Engineer to witness the tests.

2. Leave 2 ft. minimum, 3 ft. maximum length for each conductor up to the splice in ground boxes. Leave 3 ft. minimum, 4 ft. maximum length of conductor in ground boxes when pulled through with no splice. Leave 1 ft. minimum, 1.5 ft. maximum length of conductor at enclosures, weatherheads and pole bases.

3. Make splices only in junction boxes, ground boxes, pole bases, or electrical enclosures and use only listed compression or screw type pressure connectors, terminal blocks, or split bolt connectors. Insulate splices with heavy wall heat shrink tubing or gel-filled insulating splice covers to provide a watertight splice. Overlap conductor insulation with heat shrink tubing a minimum of 2 in. past both sides of the splice. Where heat shrink tubing may not shrink sufficiently to provide a watertight seal around the individual conductors, prior to heating the tubing, increase the diameter of the conductor insulation using hot melt adhesive tape to provide a watertight seal between the individual conductors and the heat shrink tubing. Ensure the tape extends past the heat shrink tubing. Use hot melt adhesive tape to fill the gap and seal the ends of heat shrink tubing. Heat shrink tubing that appears to have been burned, or overheated, is considered defective and must be replaced.

4. Size and install gel-filled insulating splice covers according to manufacturer's specifications when used in place of heat shrink tubing.

5. Wire nuts with factory applied waterproof sealant may be used for 8 AWG or smaller conductors in above ground junction boxes, but not in pole bases or ground boxes. Install wire nuts in an upright position to prevent the accumulation of water.

6. Support conductors in illumination poles with a J-hook at the top of the pole.

7. When terminating conductors, remove the insulation and jacketing material without nicking the individual strands of the conductor. Conductors with nicked individual conductor strands or removed strands will be considered damaged.

8. Replace conductors and cables that are damaged beyond repair or that fail an insulation resistance test at no additional cost to the department.

9. Do not repair damaged conductors with duct tape, electrical tape, or wire nuts. Use only approved splicing methods.

10. Do not terminate more than one conductor under a single connector, unless the connector is rated for multiple conductors. Do not exceed the pressure connector's listing for maximum number and size of conductors allowed.

11. Install breakaway connectors on conductors bid under Item 620 whenever those conductors pass through a breakaway support device. Follow manufacturer's instructions when terminating conductors to breakaway connectors. Properly torque threaded connections. Proper terminations are critical to the safe operation of breakaway devices. Trim waterproofing boots on breakaway connectors to fit snugly around the conductor to ensure waterproof connection. Only one conductor may enter a single opening in a boot. Provide waterproof boots with the correct number of openings. Leave unused openings factory sealed. Use prequalified breakaway connectors as shown on the MPL.

12. Provide and install a separate stranded equipment grounding conductor (EGC) in all conduits that contain circuit wiring of 50 volts or more. Unless shown elsewhere, size the EGC to be the same size as the largest current carrying conductor contained in the conduit. Ensure all EGCs are bonded together at every accessible location. For traffic signal installations, provide a minimum size 8 AWG EGC. The EGC is paid for under Item 620.

C. TEMPORARY WIRING

1. Install temporary conductors and electrical equipment in accordance with the NEC article "Temporary Installations" and Department standard sheets.

2. Provide a ground fault circuit interrupter (GFCI) for power outlets for portable electrical equipment, power tools, ice machines, ice storage bins and refrigerators located outdoors at grade. GFCI may be any one of the following: molded cord and plug set, receptacle, or circuit breaker type.

3. Use listed wire nuts with factory applied sealant for temporary wiring where approved.

4. Enclose conductor splices within a listed enclosure or ground box, or ensure the splices are more than 10 ft. above grade vertically and more than 5 ft. horizontally from any metal structure. Where installing temporary conductors in areas subject to vehicle traffic or mobile construction equipment, ensure the vertical clearance to ground is at least 18 ft. when measured at the lowest point. Ground messenger wires that support power conductors in conformance with the NEC.

5. Protect and when necessary repair any existing electrical conduits uncovered during the construction process in a timely manner and in conformance with the NEC.

GROUND RODS & GROUNDING ELECTRODES

A. MATERIAL INFORMATION

1. Provide and install a grounding electrode at electrical services. Provide ground rods according to DMS 11040 and the plans. Larger diameter or longer length rods may be called for in some specific locations, see the individual plans sheets. Concrete encased grounding electrodes may be called for in specific locations including electrical service, see individual plan sheets.

B. CONSTRUCTION METHODS

1. Furnish auxiliary ground rods for lightning protection and install in soil, concrete, or both, as called for in the plans. For ground rods installed in concrete, ensure the connection of the conductor to the ground rod is readily accessible for inspection or repairs. For ground rods installed in soil, ensure that the upper end is between 2 to 4 in. below finished grade.

2. Do not place ground rods in the same drilled hole as a timber pole.

3. Install ground rods so the imprinted part number is at the upper end of the rod.

4. Remove all non-conductive coatings such as concrete splatter from the rod at the clamp location.

5. Route all conductors as short and straight as possible for connection to lightning protection ground rods. When a bend is required, ensure a minimum radius bend of four inches for these conductors.

6. Unless otherwise called for in the plans, protect grounding electrode conductors with non-metallic conduit. When protecting grounding electrode conductors with metal conduit, provide and install a grounding type bushing and properly sized bonding jumper on each end of the metal conduit.

7. Written authorization is required before installing a ground rod in a horizontal trench for rocky soil or a solid rock bottom.

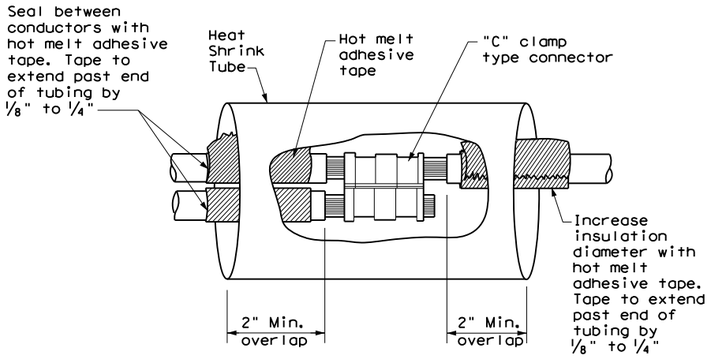

SPLICE OPTION 1
Compression Type

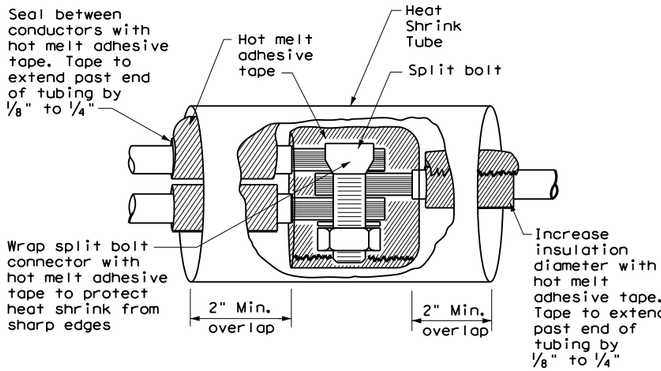

SPLICE OPTION 2
Split Bolt Type

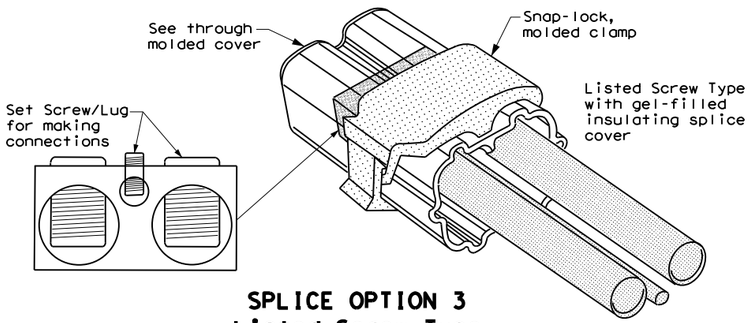

SPLICE OPTION 3
Listed Screw Type

Texas Department of Transportation

Traffic Operations Division Standard

ELECTRICAL DETAILS CONDUCTORS

ED(3)-14

FILE: ed3-14.dgn	DN: TxDOT	CK: TxDOT	DW: TxDOT	CK: TxDOT
©TxDOT October 2014	CONT	SECT	JOB	HIGHWAY
REVISIONS	005	515	072	US 84
	DIST	COUNTY		SHEET NO.
	WAC	MCLENNAN		421

71C

DISCLAIMER:
The use of this standard is governed by the "Texas Engineering Practice Act". No warranty of any kind is made by TxDOT for any purpose whatsoever. TxDOT assumes no responsibility for the conversion of this standard to other formats or for incorrect results or damages resulting from its use.

DATE:
FILE:

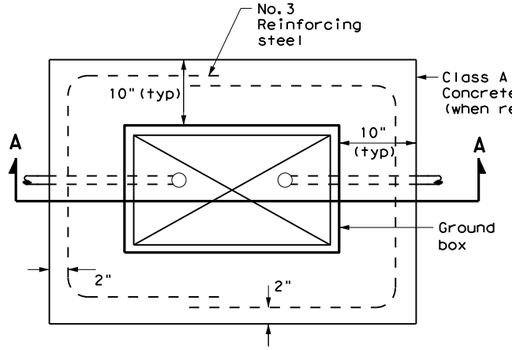

PLAN VIEW

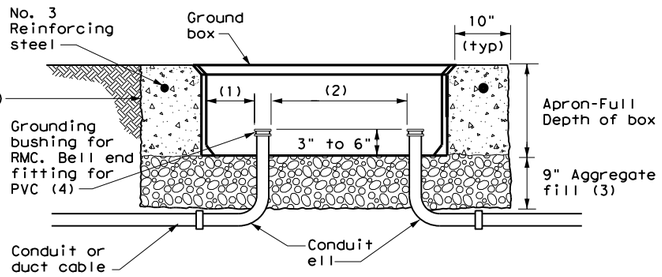

SECTION A - A

APRON FOR GROUND BOX

(1) Uniformly space ends of conduits within the ground box. Position ends of conduits so that ground box walls do not interfere with the installation of grounding bushings or bell end fittings.

(2) Maintain sufficient space between conduits to allow for proper installation of bushing.

(3) Place aggregate under the box, not in the box. Aggregate should not encroach on the interior volume of the box.

(4) Install a grounding bushing on the upper end of all RMC terminating in a ground box. Ground RMC elbows when any part of the elbow is less than 18 in. below the bottom of the ground box. Install a PVC bushing or bell end fitting on the upper end of all PVC conduits terminating in a ground box.

GROUND BOX DIMENSIONS	
TYPE	OUTSIDE DIMENSIONS (INCHES) (Width x Length X Depth)
A	12 X 23 X 11
B	12 X 23 X 22
C	16 X 29 X 11
D	16 X 29 X 22
E	12 X 23 X 17

GROUND BOX COVER DIMENSIONS								
TYPE	DIMENSIONS (INCHES)							
	H	I	J	K	L	M	N	P
A, B & E	23 1/4	23	13 3/4	13 1/2	9 7/8	5 1/8	1 3/8	2
C & D	30 1/2	30 1/4	17 1/2	17 1/4	13 1/4	6 3/4	1 3/8	2

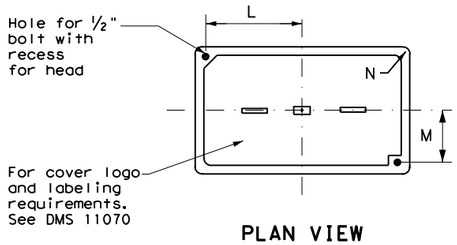

PLAN VIEW

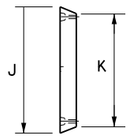

END

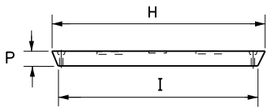

SIDE

GROUND BOX COVER

GROUND BOXES

A. MATERIALS

1. Provide polymer concrete ground boxes measuring 16x30x24 in. (WxLxD) or smaller in accordance with Departmental Material Specification (DMS) 11070 "Ground Boxes" and Item 624 "Ground Boxes."

2. Provide Type A, B, C, D, and E ground boxes as shown in the plans, and as listed on the Material Producers List (MPL) on the Department web site under "Roadway Illumination and Electrical Supplies," Item 624.

3. Ensure ground box cover is correctly labeled in accordance with DMS 11070.

4. Provide larger ground boxes in accordance with Item 624 and as shown in the plans.

B. CONSTRUCTION METHODS

1. Remove all gravel and dirt from conduit. Cap all conduits prior to placing aggregate and setting ground box. Provide Grade 3 or 4 coarse aggregate as shown on Table 2 of Item 302 "Aggregates for Surface Treatments." Ensure aggregate bed is in place and at least 9 inches deep, prior to setting the ground box. Install ground box on top of aggregate.

2. Cast ground box aprons in place. Reinforcing steel may be field bent. Ensure the depth of concrete for the apron extends from finished grade to the top of the aggregate bed under the box. Ground box aprons, including concrete and reinforcing steel, are subsidiary to ground boxes when called for by descriptive code.

3. Keep bolt holes in the box clear of dirt. Bolt covers down when not working in ground boxes.

4. Install all conduits and ells in a neat and workmanlike manner. Uniformly space conduits so grounding bushings and bell end fittings can easily be installed.

5. Temporarily seal all conduits in the ground box until conductors are installed.

6. Permanently seal conduits immediately after the completion of conductor installation and pull tests. Permanently seal the ends of all conduits with duct seal, expandable foam, or other method as approved. Do not use duct tape as a permanent conduit sealant. Do not use silicone caulk as a sealant.

7. When a ground rod is present in a ground box, bond all equipment grounding conductors together and to the ground rod with listed connectors.

8. When a type B or D ground box is stacked to meet volume requirements, it is allowable to cut an appropriately sized hole for conduit entry in the side wall at least 18 inches below grade.

9. If an existing ground box in the contract has a metal cover, bond the cover to the equipment grounding conductor with a 3 ft. long stranded bonding jumper the same size as the grounding conductor. The bonding jumper is subsidiary to various bid items. Verify existing ground boxes with metal covers are shown on the plans, with notes fully describing the work required.

10. If other ground boxes with metal covers are within the project limits but are not part of the contract, the Engineer may direct the Contractor to bond the metal covers, identifying the specific boxes in writing. This work will be paid for separately.

11. Bond metal ground box covers to the grounding conductor with a tank ground type lug.

Texas Department of Transportation

Traffic Operations Division Standard

ELECTRICAL DETAILS
GROUND BOXES

ED(4)-14

FILE: ed4-14.dgn	DN: TxDOT	CK: TxDOT	DW: TxDOT	CK: TxDOT
© TxDOT October 2014	CONT	SECT	JOB	HIGHWAY
REVISIONS	005	515	072	US 84
	DIST	COUNTY		SHEET NO.
	WAC	MCLENNAN		422

71D

DISCLAIMER:
The use of this standard is governed by the "Texas Engineering Practice Act". No warranty of any kind is made by TxDOT for any purpose whatsoever. TxDOT assumes no responsibility for the conversion of this standard to other formats or for incorrect results or damages resulting from its use.

DATE:
FILE:

ELECTRICAL SERVICES NOTES

1. Provide new materials. Ensure installation and materials comply with the applicable provisions of the National Electrical Code (NEC) and National Electrical Manufacturers Association (NEMA) standards. Ensure material is Underwriters Laboratories (UL) listed. Provide and install electrical service conduits, conductors, disconnects, contactors, circuit breaker panels, and branch circuit breakers as shown on the Electrical Service Data chart in the plans. Faulty fabrication or poor workmanship in material, equipment, or installation is justification for rejection. Where manufacturers provide warranties and guarantees as a customary trade practice, furnish these to the State.

2. Provide electrical services in accordance with Electrical Details standard sheets, Departmental Material Specification (DMS) 11080 "Electrical Services,"DMS 11081 "Electrical Services-Type A," DMS 11082 "Electrical Services-Type C," DMS 11083 "Electrical Services-Type D," DMS 11084 "Electrical Services-Type T," DMS 11085 "Electrical Services-Pedestal (PS)", and Item 628 "Electrical Services" of the Standard Specifications. Provide electrical service types A, C, and D, as listed on the Material Producers List (MPL) on the Department web site under "Roadway Illumination and Electrical Supplies," Item 628. Provide other service types as detailed on the plans.

3. Provide all work, materials, services, and any incidentals needed to install a complete electrical service as specified in the plans.

4. Coordinate with the Engineer and the utility provider for metering and compliance with utility requirements. Primary line extensions, connection charges, meter charges, and other charges by the utility company to provide power to the location are paid for in accordance with Item 628. Get approval for the costs associated with these charges prior to engaging the utility company to do the work. Consult with the utility provider to determine costs and requirements, and coordinate the work as approved.

5. The enclosure manufacturer will provide Master Lock Type 2 with brass tumblers keyed #2195 for all custom electrical enclosures. Installing Contractor is to provide Master Lock #2195 Type 2 with brass tumblers for "off the shelf" enclosures. Master Lock #2195 keys and locks become property of the State. Unless otherwise approved, do not energize electrical service equipment until locks are installed.

6. Enclosures with external disconnects that de-energize all equipment inside the enclosure do not need a dead front trim. Protect incoming line terminations from incidental contact as required by the NEC.

7. When galvanized is specified for nuts, screws, bolts or miscellaneous hardware, stainless steel may be used.

8. Provide wiring and electrical components rated for 75°C. Provide red, black, and white colored XHHW service entrance conductors of minimum size 6 American Wire Gauge (AWG). Identify size 6 AWG conductors by continuous color jacket. Identify electrical conductors sized 4 AWG and larger by continuous color jacket or by colored tape. Mark at least 6 inches of the conductor's insulation with half laps of colored tape, when identifying conductors. Ensure each service entrance conductor exits through a separately bushed non-metallic opening in the weatherhead. The lengths of the conductors outside the weatherhead are to be 12 inches minimum, 18 inches maximum, or as required by utility.

9. All electrical service conduit and conductors attached to the electrical service including the riser or the elbow below ground are subsidiary to the electrical service. For an underground utility feed, all service conduit and conductors after the elbow, including service conduit and conductors for the utility pole riser when furnished by the Contractor, will be paid for separately.

10. Provide rigid metal conduit (RMC) for all conduits on service, except for the ½ in. PVC conduit containing the electrical service grounding electrode conductor. Size the service entrance conduit as shown in the plans. Ensure conduit for branch circuit entry to enclosure is the same size as that shown on the layout sheets for branch circuit conduit. Extend all rigid metal conduits a minimum of 6 inches underground and then couple to the type and schedule of the conduit shown on the layout for that particular branch circuit. Install a grounding bushing on the RMC where it terminates in the service enclosure.

11. Use of liquidtight flexible metal conduit (LFMC) is allowed between the meter and service enclosure when they are mounted 90 to 180 degrees to each other. Size the LFMC the same size as service entrance conduit. LFMC must not exceed 3 feet in length. Strap LFMC within 1 foot of each end. LFMC less than 12 inches in length need not be strapped. Each end of LFMC must have a grounding bushing or be terminated with a grounding fitting. The LFMC must contain a grounded (neutral) conductor. Ensure any bend in LFMC never exceeds 180 degrees. A pull test is required on all installed conductors, with at least six inches of free conductor movement demonstrated to the satisfaction of the Engineer.

12. Ensure all mounting hardware and installation details of services conform to utility company specifications.

13. For all electrical service enclosures listed under Item 628 on the MPL, the UL 508 enclosure manufacturers will prepare and submit a schematic drawing unique to each service. Before shipment to the job site, place the applicable laminated schematic drawings and the laminated plan sheet showing the electrical service data chart used to build the enclosure in the enclosure's data pocket. The installing contractor will copy and laminate the actual project plan sheets detailing all equipment and branch circuits supplied by that service. The laminated plan sheets are to be placed in the service enclosure's document pocket. Reduce 11 in. x 17 in. plan sheets to 8 ½ in. x 11 in. before laminating. If the installation differs from the plan sheets, the installing contractor is to redline plan sheets before laminating.

14. When providing an "Off The Shelf" Type D or Type T service, provide laminated plan sheets detailing equipment and branch circuits supplied by that service. Reduce 11 in. x 17 in. plan sheets to 8 ½ in. x 11 in before laminating. Deliver these drawings before completion of the work to the Engineer, instead of placing in enclosure that has no door pocket.

15. Do not install conduit in the back wall of a service enclosure where it would penetrate the equipment mounting panel inside the enclosure. Provide grounding bushings on all metal conduits, and terminate bonding jumpers to grounding bus. Grounding bushings are not required when the end of the metal conduit is fitted with a conduit sealing hub or threaded boss, such as a meter base hub.

SERVICE ASSEMBLY ENCLOSURE

1. Provide threaded hub for all conduit entries into the top of enclosure.

2. Type galvanized steel (GS) enclosures may be used for Type C panelboards and for Type D and T services that do not use an enclosure mounted photocell or lighting contactor. Provide GS enclosures in accordance with DMS 11080, 11082, 11083, and 11084.

3. Provide aluminum (AL) and stainless steel (SS) enclosures for Types A, C, and D in accordance with DMS 11080, 11081, 11082, 11083, and 11084. Do not paint stainless steel.

4. Provide pedestal service (PS) enclosures in accordance with ED(9) and DMS 11080 and 11085. Do not provide GS pedestal services. If GS is shown in the PS descriptive code, provide an AL enclosure.

MAIN DISCONNECT & BRANCH CIRCUIT BREAKERS

1. Field drill flange-mounted remote operator handle if needed, to ensure handle is lockable in both the "On" and "Off" positions.

2. When the utility company provides a transformer larger than 50 KVA, verify that the available fault current is less than the circuit breaker's ampere interrupting capacity (AIC) rating and provide documentation from the electric utility provider to the Engineer.

PHOTOELECTRIC CONTROL

1. Provide photocell as listed on the MPL. Move, adjust, or shield the photocell from stray or ambient night time light to ensure proper operation. Mount photocell facing north when practical. Mount top of pole photocells as shown on Top Mounted Photocell Detail.

*ELECTRICAL SERVICE DATA

Elec. Service ID	Plan Sheet Number	Electrical Service Description	Service Conduit **Size	Service Conductors No./Size	Safety Switch Amps	Main Ckt. Bkr. Pole/Amps	Two-Pole Contractor Amps	Panelbd/ Loadcenter Amp Rating	Branch Circuit ID	Branch Ckt. Bkr. Pole/Amps	Branch Circuit Amps	KVA Load
SB 183	289	ELC SRV TY A 240/480 100(SS)AL(E)SF(U)	2"	3/#2	100	2P/100	100	N/A	Lighting NB	2P/40	26	28.1
									Lighting SB	2P/40	25	
									Underpass	1P/20	15	
NB Access	30	ELC SRV TY D 120/240 060(NS)SS(E)TS(O)	1 ¼"	3/#6	N/A	2P/60		100	Sig. Controller	1P/30	23	5.3
							30		Luminaires	2P/20	9	
									CCTV	1P/20	3	
2nd & Main	58	ELC SRV TY T 120/240 000(NS)GS(N)SP(O)	1 ¼"	3/#6	N/A	N/A	N/A	70	Flashing Beacon 1	1P/20	4	1.0
									Flashing Beacon 2	1P/20	4	

* Example only, not for construction. All new electrical services must have electrical service data chart specific to that service as shown in the plans.

** Verify service conduit size with utility. Size may change due to utility meter requirements. Ensure conduit size meets the National ELectrical Code.

EXPLANATION OF ELECTRICAL SERVICE DESCRIPTIVE CODE

ELEC SERV TY X XXX/XXX XXX (XX) XX (X) XX (X)

Schematic Type

Service Voltage V / V

Disconnect Amp Rating
000 indicates main lug only/
Typically Type T

(SS)= Safety Switch Ahead of Meter-Check with Utility
(NS)= No safety Switch Ahead of Meter-Check with Utility

Enclosure Type
GS= Galvanized steel("off the shelf")
SS= Stainless steel(Custom Enclosure)See MPL
AL= Aluminum (Custom Enclosure)See MPL

Photocell Mounting Location
(E)= Inside Service/Enclosure Mounted
(T)= Top of pole
(L)= Luminaire mounted
(N)= None/No Photocell or Lighting Contactor Required

Service Support Type
GC= Granite concrete
OC= Other concrete
TP= Timber pole
SP= Steel pole
SF= Steel frame
OT= Pole by others or paid for separately
EX= Existing pole
TS= Service on traffic signal pole
PS= Pedestal Service

O= Overhead Service Feed from Utility
U= Underground Service Feed from Utility

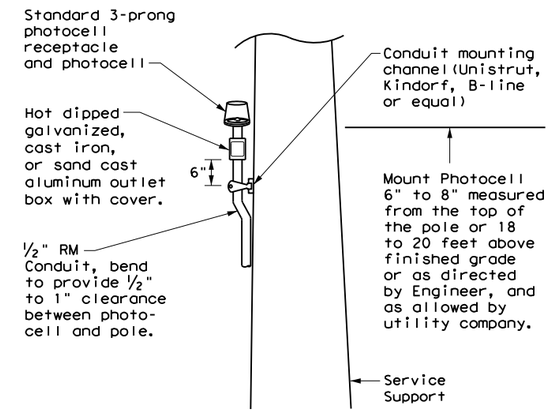

TOP MOUNTED PHOTOCELL

Install conduit strap maximum 3 feet from box. 5 foot maximum spacing between straps supporting conduit.

Texas Department of Transportation

Traffic Operations Division Standard

ELECTRICAL DETAILS SERVICE NOTES & DATA

ED(5)-14

FILE: ed5-14.dgn	DN: TxDOT	CK: TxDOT	DW: TxDOT	CK: TxDOT
©TxDOT October 2014	CONT	SECT	JOB	HIGHWAY
REVISIONS	005	15	072	US 84
	DIST	COUNTY		SHEET NO.
	WAC	MCLENNAN		423

DISCLAIMER:
The use of this standard is governed by the "Texas Engineering Practice Act". No warranty of any kind is made by TxDOT for any purpose whatsoever. TxDOT assumes no responsibility for the conversion of this standard to other formats or for incorrect results or damages resulting from its use.

DATE:
FILE:

TRAFFIC SIGNAL NOTES

1. Do not pass luminaire conductors through the signal controller cabinet.
2. Include an equipment grounding conductor in all conduits throughout the electrical system. Bond all exposed metal parts to the grounding conductor.
3. Provide roadway luminaires, when required, in accordance with the material and construction sections of Item 610, "Roadway Illumination Assemblies," except for performance testing of luminaires. Test installed roadway luminaires for proper operation as a part of the associated traffic signal system test.
4. If internally illuminated street name signs are approved for use, ground the fixture to the pole with a 12 AWG green XHHW conductor.
5. Bond anchor bolts to rebar cage in two locations using #3 bars or 6 AWG stranded copper conductors. Use listed mechanical connectors rated for embedment in concrete. See TXDOT standard TS-FD for further details.
6. Drill and tap signal poles for ½ in. X 13 UNC tank ground fitting. Provide and install tank ground fitting 4 in. to 6 in. directly below electrical service enclosure. Provide properly sized hole through the bottom of the enclosure for the service grounding electrode conductor. Connect the electrical service grounding electrode conductor to the tank ground fitting. Ensure electrical service grounding electrode conductor is as short and straight as possible from the enclosure to the tank ground fitting. See Inset A detail for further information. Size service entrance conduit and branch circuit conduit as shown in the plans.
7. Mount electrical service enclosure and meter to signal pole with stainless steel bands. Ensure bands are a minimum width of ¾ in. Secure enclosures to bands using two-bolt brackets. Install brackets near top and bottom of each enclosure. Install properly sized stainless steel washers on each bolt in the enclosure. Band or drill and tap properly sized stand-off straps to signal pole for attaching conduit.
8. Conduct pull tests and insulation resistance tests on all illumination and power conductors as required in Item 620 "Electrical Conductors" and ED(3). To prevent electronics damage, do not conduct insulation resistance tests on traffic signal cables after termination.
9. Lock all enclosures and bolt down all ground box covers before applying power to the signal installation.
10. Terminate conduits entering the top of enclosures with a conduit-sealing hub or threaded boss such as meter hub. Install a grounding bushing on all metal conduits not connected to conduit-sealing hub or threaded boss. Bond the grounding bushing to the ground bus with a bonding jumper. Seal all conduits entering enclosures with duct seal or expanding foam. Do not use silicone to seal conduit ends.
11. For all conduits, ensure the burial depth is a minimum of 18". Ensure the minimum burial depth for conduit placed under a roadway is 24".

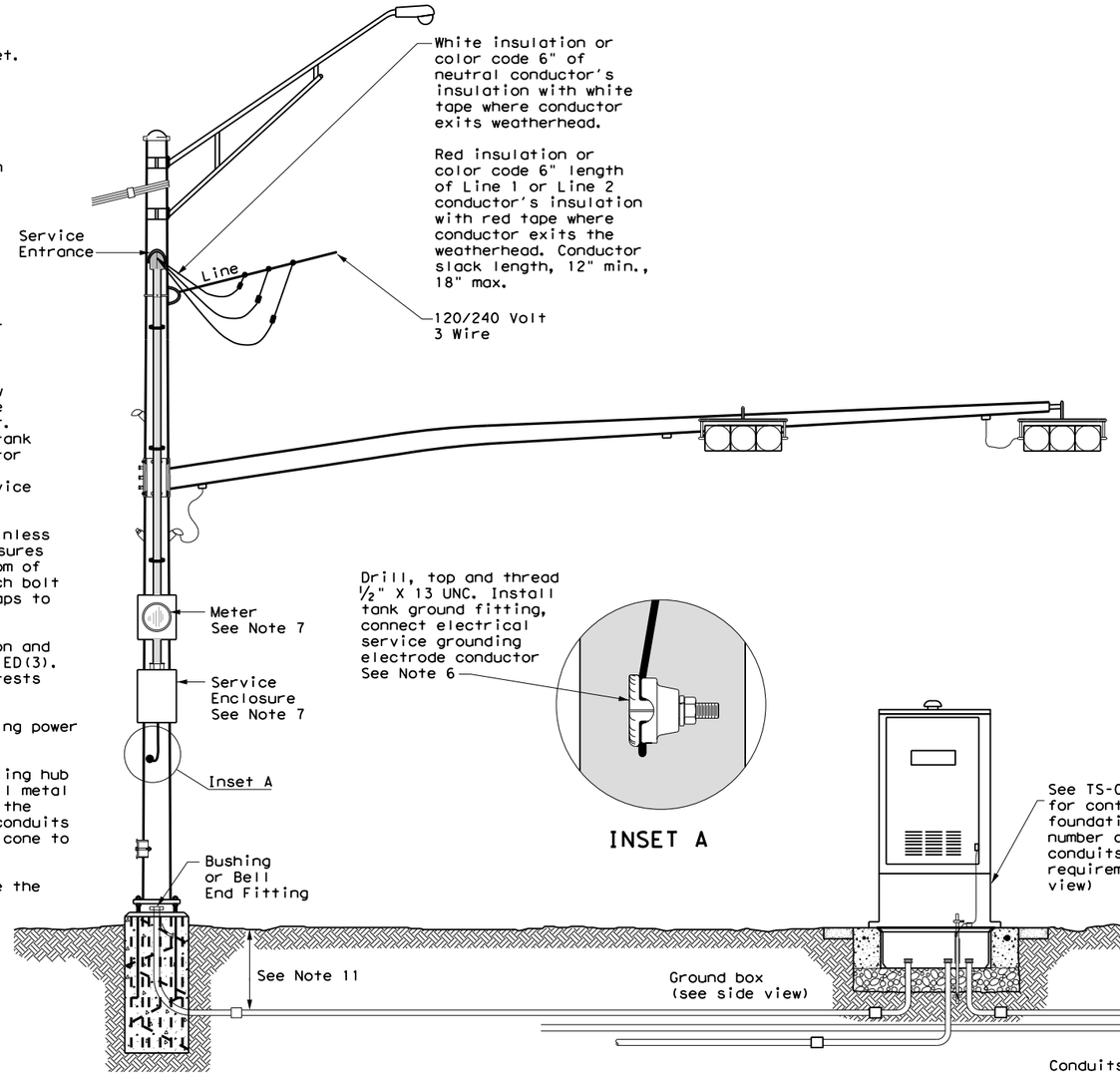

SIGNAL POLE WITH SERVICE

Type T electrical service mounted on signal pole shown as an example. See electrical details, layout sheets, and electrical service data chart for additional details.

INSET A

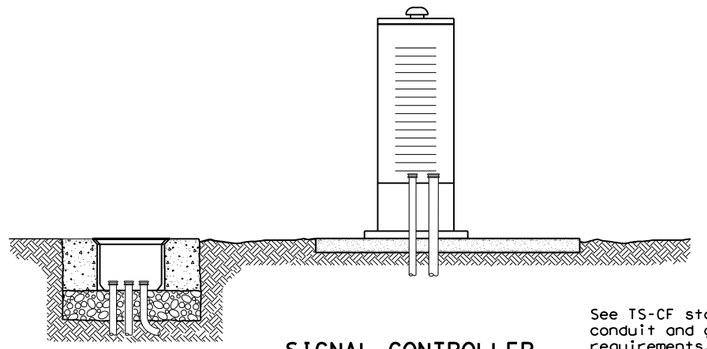

SIGNAL CONTROLLER SIDE VIEW

See TS-CF standard for conduit and grounding requirements. See layout sheets for ground box locations and any additional conduits that are required.

SIGNAL CONTROLLER FRONT VIEW

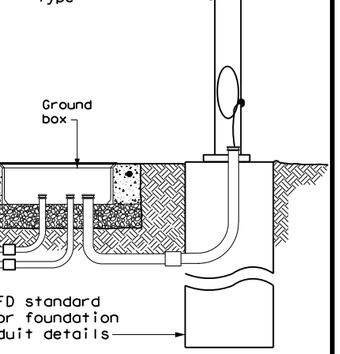

SIGNAL POLE

Texas Department of Transportation

Traffic Operations Division Standard

ELECTRICAL DETAILS TYPICAL TRAFFIC SIGNAL SYSTEM DETAILS

ED(8)-14

FILE: ed8-14.dgn	DN: TxDOT	CK: TxDOT	DW: TxDOT	CK: TxDOT
©TxDOT October 2014	CONT	SECT	JOB	HIGHWAY
REVISIONS	005	15	072	US 84
	DIST	COUNTY		SHEET NO.
	WAC	MCLENNAN		424

71H

DISCLAIMER:
The use of this standard is governed by the "Texas Engineering Practice Act". No warranty of any kind is made by TxDOT for any purpose whatsoever. TxDOT assumes no responsibility for the conversion of this standard to other formats or for incorrect results or damages resulting from its use.

DATE:
FILE:

PEDESTAL SERVICE NOTES

1. Manufacture pedestal electrical services in accordance with Departmental Material Specifications (DMS)11080 "Electrical Services", 11085 "Electrical Services-Pedestal (PS)" and Item 628 "Electrical Services. "Provide pedestal electrical services as listed on the Material Producers list (MPL) on the Department's web site under "Roadway Illumination and Electrical Supplies," Item 628. Ensure all mounting hardware and installation details of services meet utility company specifications. Contact the local utility company for approval of pedestal details prior to installing the electrical pedestal service. Submit any changes required by the utility company prior to manufacturing the pedestal enclosure.

2. When a meter socket is required, provide a socket with a minimum 100 amp rating that complies with local utility requirements.

3. Provide Class A or C concrete for pedestal service foundations in accordance with Item 420, "Concrete Substructures," except that concrete will not be paid for directly but is considered subsidiary to Item 628.

4. Provide #4 reinforcing steel for foundations in accordance with Item 440, "Reinforcement for Concrete."

5. Install ½ in. X 2 ⅛ in. minimum length concrete single expansion type anchors for mounting pedestal enclosure to foundation. Anchor location to match mounting holes in each corner of enclosure. Secure each of the four corners of the pedestal enclosure to the anchors in the foundation with a ½ in. galvanized or stainless steel machine thread bolt, a properly sized locknut and a flat washer.

6. Finish top of concrete foundation in a neat and workmanlike manner. If leveling washers are used, ensure no more than ⅛ in. gap at any corner. Do not exceed a maximum dip or rise in the foundation of ⅛ in. per foot. When properly installed, ensure the top of the service enclosure is level front to back and side to side within ¼ in. Repair rocking or movement of the service enclosure at no additional cost to the department.

7. Do not use liquidtight flexible metal conduit (LFMC) on pedestal type services.

8. Ensure all elbows in the foundation are sized as per utility provider's conduit requirements for underground conduit and feeders. PVC extensions may be installed provided the ends of the rigid metal conduits are more than 2 in. below the top of the concrete foundation. Where extension conduits are metal, grounding bushings must be installed with a bonding jumper properly terminated.

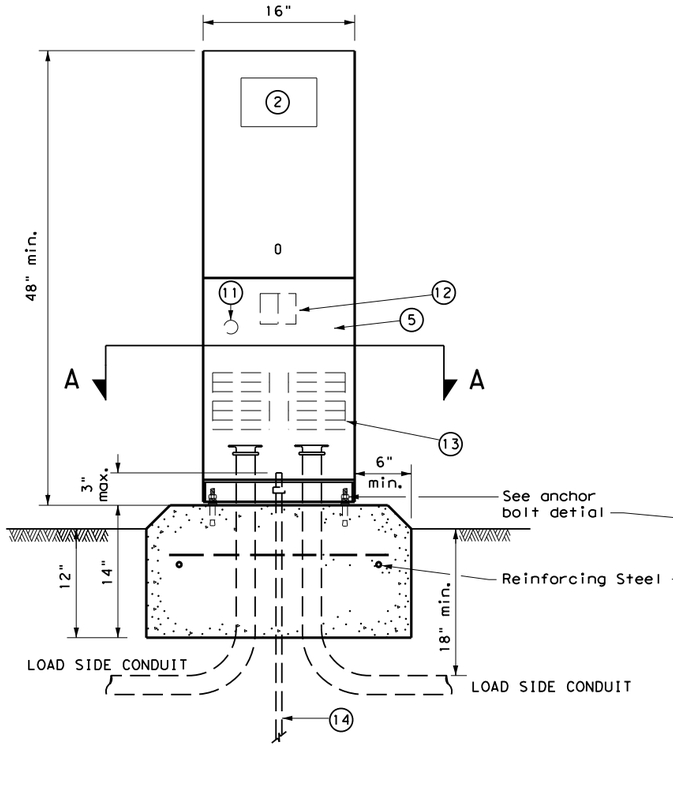

FRONT VIEW

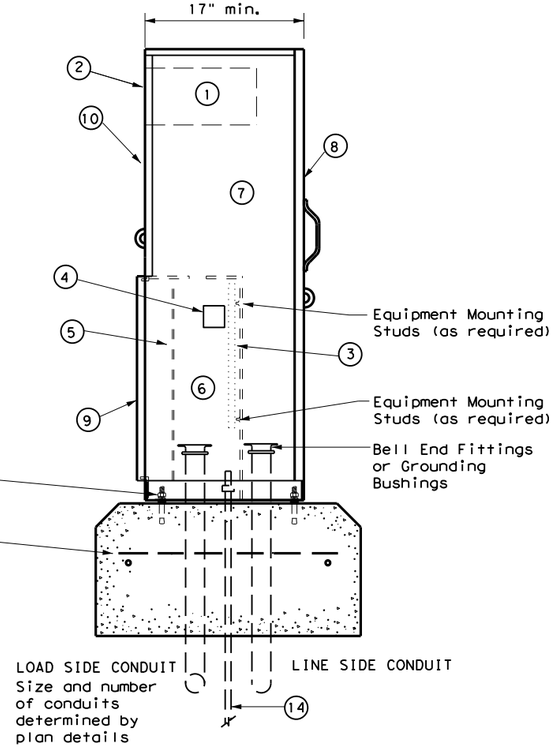

SIDE VIEW

TYPE C shown, TYPE A similar except that TYPE A shall have individual circuit breakers (CB) mounted on an equipment mounting panel. CB Handles shall protrude through hinged deadfront trim.

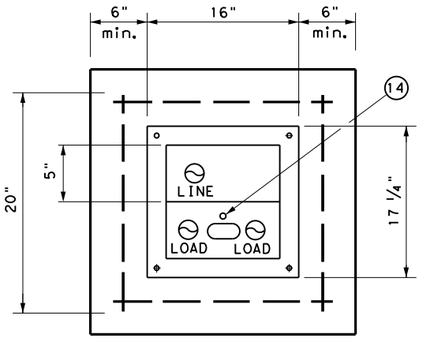

SECTION A-A

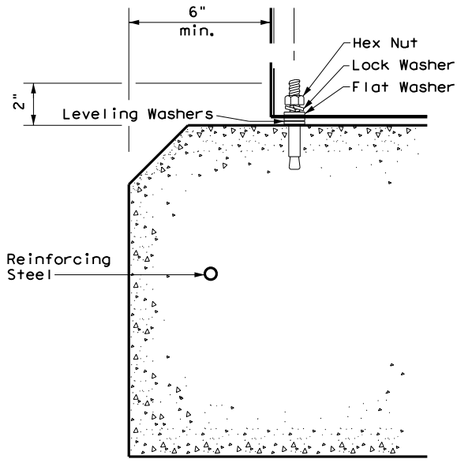

ANCHOR BOLT DETAIL

LEGEND	
1	Meter Socket, (when required)
2	Meter Socket Window, (when required)
3	Equipment Mounting Panel
4	Photo Electric Control Window, (When required)
5	Hinged Deadfront Trim
6	Load Side Conduit Trim
7	Line Side Conduit Area
8	Utility Access Door, with handle
9	Pedestal Door
10	Hinged Meter Access
11	Control Station (H-O-A Switch)
12	Main Disconnect
13	Branch Circuit Breakers
14	Copper Clad Ground Rod - 5/8" X 10'

Texas Department of Transportation

Traffic Operations Division Standard

ELECTRICAL DETAILS
ELECTRICAL SERVICE SUPPORT
PEDESTAL SERVICE TYPE PS

ED(9)-14

FILE: ed9-14.dgn	DN: TxDOT	CK: TxDOT	DW: TxDOT	CK: TxDOT
©TxDOT October 2014	CONT	SECT	JOB	HIGHWAY
REVISIONS	005	515	072	US 84
	DIST	COUNTY		SHEET NO.
	WAC	MCLENNAN		425

71J

DISCLAIMER:
The use of this standard is governed by the "Texas Engineering Practice Act". No warranty of any kind is made by TxDOT for any purpose whatsoever. TxDOT assumes no responsibility for the conversion of this standard to other formats or for incorrect results or damages resulting from its use.

DATE:
FILE:

NOTE: Structures north of ice line to be designed for ice.

ZONE 2
(90 MPH WIND)

ZONE 3
(80 MPH WIND)

ZONE 4
(70 MPH WIND)

ICE LINE

ZONE 4
(70 MPH WIND)

ICE LINE

ZONE 3
(80 MPH WIND)

ZONE 1
(100 MPH WIND)

LEGEND

ZONE 1 - = (100 MPH WIND)
ZONE 2 - = (90 MPH WIND)
ZONE 3 - = (80 MPH WIND)
ZONE 4 - = (70 MPH WIND)
= (ICE LINE)
= (DISTRICT LINES)

WIND VELOCITY & ICE ZONES FOR APPLICABLE OVERHEAD SIGN SUPPORTS, HIGH MAST POLES, AND TRAFFIC SIGNAL POLES

Based on 50 Year Mean Recurrence Interval of Fastest Mile Wind Velocity at 33 feet height.

THIS SHEET TO BE INCLUDED IN ALL P.S.&E. PACKAGES CONTAINING ONE OR MORE OF THE APPLICABLE STANDARD SHEETS LISTED HEREON

APPLICABLE STANDARDS SHEETS

OVERHEAD SIGN BRIDGE STANDARDS:

OSB-SE
OSB-Z#
OSB-Z#1
HOSB-Z#
HOSB-Z1L
HOSB-Z#1
OSBT
OSBC
OSBC-SC-Z#
OSBS-SC
OSB-FD
OSB-FD-SC

CANTILEVER OVERHEAD SIGN SUPPORT STANDARDS:

COSS-SE
COSS-Z#-10
HCOSS-Z#-10
COSS-Z21-10
COSS-Z#&Z#1-10
COSSD
COSSF
COSS-FD

Note: # = Wind Zone number 1, 2, 3 or 4

HIGH MAST ILLUMINATION POLE STANDARDS:

HMIP-98
HMIF-98

WALKWAYS AND BRACKETS STANDARDS:

SWW
SB(SWL-1)

TRAFFIC SIGNAL POLE STANDARDS:

SP-80
SP-100
SMA-80
SMA-100
DMA-80
DMA-100
MA-C
MAC(ILSN)
MAD-D
TS-FD
LUM-A
CFA
LMA
TS-C
MA-DPD

FOR HARRIS CO. ONLY
Zone line is just North of US 90, around on the North, West and South sides of IH 610 and down the West side of SH 288.

FOR JACKSON CO. ONLY
Zone line is just North of SH 616.

Texas Department of Transportation

Traffic Operations Division Standard

WIND VELOCITY AND ICE ZONES

WV & IZ-14

FILE: windice.dgn	DN: TxDOT	CK: TxDOT	DW: TxDOT	CK: TxDOT
©TxDOT April 1996	CONT	SECT	JOB	HIGHWAY
REVISIONS	005	515	072	US 84
8-14-Added list of applicable standards, restricting use to structures designed for Fastest Mile wind speeds.	DIST	COUNTY		SHEET NO.
	WAC	MCLENNAN		426

DISCLAIMER:
The use of this standard is governed by the "Texas Engineering Practice Act". No warranty of any kind is made by TxDOT for any purpose whatsoever. TxDOT assumes no responsibility for the conversion of this standard to other formats or for incorrect results or damages resulting from its use.

DATE:
FILE:

I. STORMWATER POLLUTION PREVENTION-CLEAN WATER ACT SECTION 402

TPDES TXR 150000: Stormwater Discharge Permit or Construction General Permit required for projects with 1 or more acres disturbed soil. Projects with any disturbed soil must protect for erosion and sedimentation in accordance with Item 506.

List MS4 Operator(s) that may receive discharges from this project. They may need to be notified prior to construction activities.

1.

2.

☒ No Action Required ☐ Required Action

Action No.

1. Prevent stormwater pollution by controlling erosion and sedimentation in accordance with TPDES Permit TXR 150000

2. Comply with the SW3P and revise when necessary to control pollution or required by the Engineer.

3. Post Construction Site Notice (CSN) with SW3P information on or near the site, accessible to the public and TCEQ, EPA or other inspectors.

4. When Contractor project specific locations (PSL's) increase disturbed soil area to 5 acres or more, submit NOI to TCEQ and the Engineer.

II. WORK IN OR NEAR STREAMS, WATERBODIES AND WETLANDS CLEAN WATER ACT SECTIONS 401 AND 404

USACE Permit required for filling, dredging, excavating or other work in any water bodies, rivers, creeks, streams, wetlands or wet areas.

The Contractor must adhere to all of the terms and conditions associated with the following permit(s):

☒ No Permit Required

☐ Nationwide Permit 14 - PCN not Required (less than 1/10th acre waters or wetlands affected)

☐ Nationwide Permit 14 - PCN Required (1/10 to <1/2 acre, 1/3 in tidal waters)

☐ Individual 404 Permit Required

☐ Other Nationwide Permit Required: NWP# _____

Required Actions: List waters of the US permit applies to, location in project and check Best Management Practices planned to control erosion, sedimentation and post-project TSS.

1.

2.

3.

4.

The elevation of the ordinary high water marks of any areas requiring work to be performed in the waters of the US requiring the use of a nationwide permit can be found on the Bridge Layouts.

Best Management Practices:

Erosion	Sedimentation	Post-Construction TSS
☐ Temporary Vegetation	☒ Silt Fence	☐ Vegetative Filter Strips
☐ Blankets/Matting	☒ Rock Berm	☐ Retention/Irrigation Systems
☐ Mulch	☐ Triangular Filter Dike	☐ Extended Detention Basin
☒ Sodding	☐ Sand Bag Berm	☐ Constructed Wetlands
☐ Interceptor Swale	☐ Straw Bale Dike	☐ Wet Basin
☐ Diversion Dike	☐ Brush Berms	☐ Erosion Control Compost
☐ Erosion Control Compost	☒ Erosion Control Compost	☐ Mulch Filter Berm and Socks
☐ Mulch Filter Berm and Socks	☐ Mulch Filter Berm and Socks	☐ Compost Filter Berm and Socks
☐ Compost Filter Berm and Socks	☐ Compost Filter Berm and Socks	☐ Vegetation Lined Ditches
	☐ Stone Outlet Sediment Traps	☐ Sand Filter Systems
	☐ Sediment Basins	☐ Grassy Swales

III. CULTURAL RESOURCES

Refer to TxDOT Standard Specifications in the event historical issues or archeological artifacts are found during construction. Upon discovery of archeological artifacts (bones, burnt rock, flint, pottery, etc.) cease work in the immediate area and contact the Engineer immediately.

☒ No Action Required ☐ Required Action

Action No.

1.

2.

3.

4.

IV. VEGETATION RESOURCES

Preserve native vegetation to the extent practical.
Contractor must adhere to Construction Specification Requirements Specs 162, 164, 192, 193, 506, 730, 751, 752 in order to comply with requirements for invasive species, beneficial landscaping, and tree/brush removal commitments.

☒ No Action Required ☐ Required Action

Action No.

1.

2.

3.

4.

V. FEDERAL LISTED, PROPOSED THREATENED, ENDANGERED SPECIES, CRITICAL HABITAT, STATE LISTED SPECIES, CANDIDATE SPECIES AND MIGRATORY BIRDS.

☒ No Action Required ☐ Required Action

Action No.

1.

2.

3.

4.

If any of the listed species are observed, cease work in the immediate area, do not disturb species or habitat and contact the Engineer immediately. The work may not remove active nests from bridges and other structures during nesting season of the birds associated with the nests. If caves or sinkholes are discovered, cease work in the immediate area, and contact the Engineer immediately.

LIST OF ABBREVIATIONS

BMP:	Best Management Practice	SPCC:	Spill Prevention Control and Countermeasure
CGP:	Construction General Permit	SW3P:	Storm Water Pollution Prevention Plan
DSHS:	Texas Department of State Health Services	PCN:	Pre-Construction Notification
FHWA:	Federal Highway Administration	PSL:	Project Specific Location
MOA:	Memorandum of Agreement	TCEQ:	Texas Commission on Environmental Quality
MOU:	Memorandum of Understanding	TPDES:	Texas Pollutant Discharge Elimination System
MS4:	Municipal Separate Stormwater Sewer System	TPWD:	Texas Parks and Wildlife Department
MBTA:	Migratory Bird Treaty Act	TxDOT:	Texas Department of Transportation
NOT:	Notice of Termination	T&E:	Threatened and Endangered Species
NWP:	Nationwide Permit	USACE:	U.S. Army Corps of Engineers
NOI:	Notice of Intent	USFWS:	U.S. Fish and Wildlife Service

VI. HAZARDOUS MATERIALS OR CONTAMINATION ISSUES

General (applies to all projects):

Comply with the Hazard Communication Act (the Act) for personnel who will be working with hazardous materials by conducting safety meetings prior to beginning construction and making workers aware of potential hazards in the workplace. Ensure that all workers are provided with personal protective equipment appropriate for any hazardous materials used.

Obtain and keep on-site Material Safety Data Sheets (MSDS) for all hazardous products used on the project, which may include, but are not limited to the following categories: Paints, acids, solvents, asphalt products, chemical additives, fuels and concrete curing compounds or additives. Provide protected storage, off bare ground and covered, for products which may be hazardous. Maintain product labelling as required by the Act.

Maintain an adequate supply of on-site spill response materials, as indicated in the MSDS. In the event of a spill, take actions to mitigate the spill as indicated in the MSDS, in accordance with safe work practices, and contact the District Spill Coordinator immediately. The Contractor shall be responsible for the proper containment and cleanup of all product spills.

Contact the Engineer if any of the following are detected:
* Dead or distressed vegetation (not identified as normal)
* Trash piles, drums, canister, barrels, etc.
* Undesirable smells or odors
* Evidence of leaching or seepage of substances

Does the project involve any bridge class structure rehabilitation or replacements (bridge class structures not including box culverts)?

☐ Yes ☒ No

If "No", then no further action is required.
If "Yes", then TxDOT is responsible for completing asbestos assessment/inspection.

Are the results of the asbestos inspection positive (is asbestos present)?

☐ Yes ☐ No

If "Yes", then TxDOT must retain a DSHS licensed asbestos consultant to assist with the notification, develop abatement/mitigation procedures, and perform management activities as necessary. The notification form to DSHS must be postmarked at least 15 working days prior to scheduled demolition.

If "No", then TxDOT is still required to notify DSHS 15 working days prior to any scheduled demolition.

In either case, the Contractor is responsible for providing the date(s) for abatement activities and/or demolition with careful coordination between the Engineer and asbestos consultant in order to minimize construction delays and subsequent claims.

Any other evidence indicating possible hazardous materials or contamination discovered on site. Hazardous Materials or Contamination Issues Specific to this Project:

☒ No Action Required ☐ Required Action

Action No.

1.

2.

3.

VII. OTHER ENVIRONMENTAL ISSUES

(includes regional issues such as Edwards Aquifer District, etc.)

☒ No Action Required ☐ Required Action

Action No.

1.

2.

3.

Texas Department of Transportation

Design Division Standard

ENVIRONMENTAL PERMITS, ISSUES AND COMMITMENTS

EPIC

FILE: epic.dgn	DN: TxDOT	CK: RG	DW: VP	CK: AR
© TxDOT: February 2015	CONT	SECT	JOB	HIGHWAY
REVISIONS	005515		072	US 84
12-12-2011 (DS)	DIST	COUNTY		SHEET NO.
05-07-14 ADDED NOTE SECTION IV.	WAC	MCLENNAN		427
01-23-2015 SECTION I (CHANGED ITEM 1122 TO ITEM 506, ADDED GRASSY SWALES.				

SITE DESCRIPTION

PROJECT LIMITS:

US-84 FROM CENTERPOINT TO CLIFTON STREET

LOCATION MAPS:

REFER TO THE TITLE SHEET FOR PROJECT LOCATION MAP

PROJECT DESCRIPTION:

CSJ 0055-15-072 :

THE PROJECT CONSISTS OF SIDEWALK CONSTRUCTION AND IMPROVEMENTS, SIGNAL IMPROVEMENTS, AND ONE CULVERT EXPANSION ON WACO DRIVE.

MAJOR SOIL DISTURBING ACTIVITIES:

MAJOR SOIL DISTURBING ACTIVITIES WILL CONSIST OF NEW SIDEWALK CONSTRUCTION AND THE CULVERT EXPANSION ON WACO DRIVE.

TOTAL PROJECT AREA:	APPROX 67.0 AC
TOTAL AREA TO BE DISTURBED:	APPROX 9.5 AC

EXISTING CONDITION OF SOIL & VEGETATIVE COVER AND % OF EXISTING VEGETATIVE COVER:

CSJ 0055-15-072 :

PREDOMINANT SOIL TYPE IS AUSTIN-URBAN LAND COMPLEX, 1 TO 3 PERCENT SLOPES. VEGETATIVE COVER IS IN AVERAGE CONDITION, WITH LESS THAN 10 PERCENT COVERAGE WITHIN THE STUDY AREA.

NAME OF RECEIVING WATERS:

CSJ 0055-15-072 :

WACO CREEK AND UNNAMED TRIBUTARIES TO WACO CREEK ARE THE IMMEDIATE RECEIVING WATERS FOR STORMWATER FROM THIS PROJECT. STORMWATER THEN FLOWS GENERALLY NORTHEAST IN WACO CREEK TO BRAZOS RIVER (TCEQ ASSESSMENT UNIT ID: 1256_02).

EROSION AND SEDIMENT CONTROLS

SOIL STABILIZATION PRACTICES:

	TEMPORARY SEEDING		SOIL RETENTION BLANKET
X	PERMANENT PLANTING, SODDING, OR SEEDING		NATURAL BARRIERS OR BUFFER ZONES
	MULCHING		PRESERVATION OF NATURAL RESOURCES

OTHER: TXR 150000, Part III, Section G, 2. Stabilization of disturbed areas must, at a minimum, be initiated immediately whenever any clearing, grading, excavating, or other earth disturbing activities have permanently ceased on any portion of the site, or temporarily ceased on any portion of the site and will not resume for a period exceeding 14 calendar days. Temporary stabilization must be completed no more than 14 calendar days after initiation of soil stabilization measures, and final stabilization must be achieved prior to termination of permit coverage.

STRUCTURAL PRACTICES: (Select T = Temporary or P = Permanent, As Applicable)

T	SILT FENCES		TIMBER MATTING AT CONSTRUCTION EXIT
	HAY BALES		CHANNEL LINERS
	SANDBAG OR ROCK BERMS		SEDIMENT TRAPS
	DIVERSION, INTERCEPTOR, OR PERIMETER DIKES		SEDIMENT BASINS
	DIVERSION, INTERCEPTOR, OR PERIMETER SWALES	T	STORM INLET SEDIMENT TRAP
	DIVERSION DIKE AND SWALE COMBINATIONS	P	STONE OUTLET STRUCTURES
	PIPE SLOPE DRAINS	P	CURBS AND GUTTERS
	PAVED FLUMES		STORM SEWERS
	ROCK BEDDING AT CONSTRUCTION EXIT		VELOCITY CONTROL DEVICES

OTHER:

NARRATIVE-SEQUENCE OF CONSTRUCTION (STORM WATER MANAGEMENT) ACTIVITIES:

The order of activities will be as follows:
1. Preserve existing vegetative cover as much as possible.
2. Install temporary sediment control fencing, rock berms and other items as shown on plans prior to any soil disturbing activities.
3. Construct proposed culvert and roadway and perform any necessary excavation, embankment and grading.
4. Place soil retention blankets and temporary/permanent seeding as shown in the plans and as directed by the engineer.

STORM WATER MANAGEMENT:

An integral part of the SWPPP for this project includes the EPIC Sheet, Item 506, Waco District Waters of the US Notes, Waco District Typical Applications for Best Management Practices, Form 2118 TxDOT inspection forms, Contractor daily inspection forms, miscellaneous general notes on environmental requirements, TxDOT EC Standards, 2014 Standard Specifications, TxDOT roadway design drawings, SWPPP design and working BMP drawings, Site Manager Data Base, EMS Stage Gate Inspections and the Waco District environmental folders. The requirements of the TxDOT EMS will be fully implemented including training requirements for Contractors and TxDOT staff.

STORM WATER POLLUTION PREVENTION PLAN PERMIT POSTING

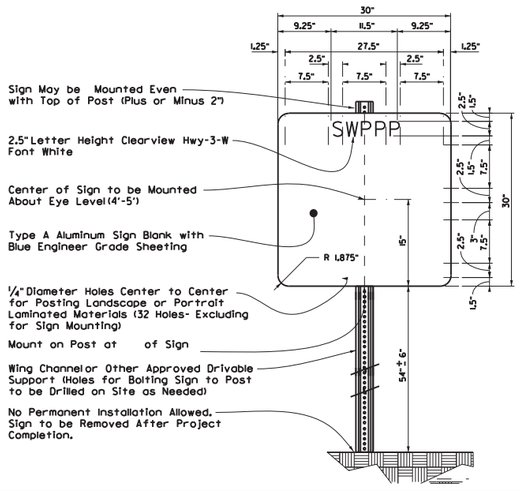

OTHER EROSION AND SEDIMENT CONTROLS:

MAINTENANCE:

All erosion and sediment best management practices (BMPs) will be maintained in good working order per the environmental notes, details and standards included as part of the project plans and contract documents. BMP repairs will be made at the earliest possible date, but no later than seven calendar days after the inspection report has been completed and immediately after the ground has dried sufficiently to allow equipment access. BMPs damaged by the Contractor will be repaired or replaced immediately. The installation and repair of BMPs at creeks and outfalls will be given priority.

INSPECTION:

TxDOT Form 2118 inspections to support TXR150000 and 404 permits will be conducted on a seven day interval on the same day of the week, until permits are terminated. The Contractor will provide daily BMP inspection reports on work days. Stage Gate Inspections and other BMP inspections will be conducted by the District and Area Office Staff based on requirements of the TxDOT Environmental Management System (EMS).

WASTE MATERIALS:

Any waste materials generated during construction will be disposed of in accordance with existing federal, state, and local laws.

HAZARDOUS WASTE (INCLUDING SPILL REPORTING):

At a minimum, any products in the following categories are considered to be hazardous: Fuels, Lubricating products, Asphalt products, or Concrete curing compounds and any additives. In the event of a spill which may be hazardous, clean-up will be done in accordance with federal, state, and local regulations. The Contractor will maintain a list of all chemicals and wastes required for the project; including chemicals used by sub-contractors, and will implement written spill prevention and clean-up plans.

SANITARY WASTE:

Sanitary waste from portable units will be collected by a licensed sanitary waste management contractor.

OFF SITE VEHICLE TRACKING:

	HAUL ROADS DAMPENED FOR DUST CONTROL
	LOADED HAUL TRUCKS TO BE COVERED WITH TARPAULIN
	EXCESS DIRT ON ROAD REMOVED DAILY
	STABILIZED CONSTRUCTION ENTRANCE

REMARKS:

Disposal areas, stockpiles, and haul roads will be constructed in a manner that will minimize and control the amount of sediment that may enter receiving waters. Disposal areas will not be located in any wetland, waterbody or streambed. Construction staging area and vehicle maintenance area will be constructed by the contractor in a manner to minimize the runoff pollutants.

Furnish one SW3P permit posting sign and sign support as detailed on the SW3P Sheet. Install this sign in a location selected by the Engineer. The sign and support should be removed upon completion of the project and is the property of the Contractor. The purchase of the sign and support, installation, relocation(s) if determined necessary by the Engineer and removal at project end will be subsidiary to Item 506.

SEDIMENTATION BASINS:

Since the area disturbed is less than 10 acres, per outfall location, a sedimentation basin is not required.

STATE OF TEXAS — SCOTT R. ARNOLD — 96782 — LICENSED PROFESSIONAL ENGINEER

Scott R. Arnold, P.E.

12/21/2020

Texas Department of Transportation

WACO DISTRICT STORM WATER POLLUTION PREVENTION PLAN (SW3P)

SHEET 1 OF 1

FED. RD. DIV. NO.	STATE	CONT	SECT	JOB	HIGHWAY
6	TEXAS	0055	15	072	US 84
		DIST	COUNTY		SHEET NO.
SCALE:		WAC	MCLENNAN		428

12/21/2020 4:36:19 PM

c:\pwworking\kho\pwprod\amber.hoffmann\dms98479\SW3P*Waco.dgn

NODE

BEST MANAGEMENT PRACTICE (BMP) GENERAL NOTES

1. Prior to TxDOT allowing the Contractor to start construction, the Contractor will provide the required storm water and 404 permit documentation and support activities, including but not limited to the following:

   - Provide a list of all chemicals, construction and waste products that will be generated, stored or brought upon TxDOT ROW. The list includes expected construction debris, sanitary wastes, construction chemicals and petroleum products used or generated by the Contractor and sub-contractors. Along with the list, the Contractor will supply a spill prevention plan and clean up procedures that will include each of these chemical products or generated waste.

   - Provide in the construction schedule the necessary line items that will comply with the schedule and planning requirements of the storm water permit.

   - Post the TxDOT storm water permit and any Contractor permits, per permit requirements.

   - Provide copies of storm water permits for Contractor PSL(s). As new PSL(s) may be obtained for the project, provide copies of new or amended permits to TxDOT. The Contractor will not disturb soil without the proper permits.

   - Provide scale drawings of off ROW PSL's within one mile of the project, for field offices, borrow sources, plant sites or other uses.

   - Provide permit information on any Contractor batch plants or concrete crushing plants to be located at a Contractor PSL(s) within one mile of the project limits or boundaries. Copies of the air and water permits are to be provided to TxDOT before materials will be used on the project. No asphalt or concrete batch plants or concrete crushing plants will be located on TxDOT ROW.

   - Provide a letter indicating a Contractor Responsible Person for environmental compliance (CRP) for the project, and maintain a CRP throughout the project duration.

   - Provide all environmental documentation including certification of compliance and EMS training documents/certificates prior to starting work. The Contractor is to provide daily BMP inspection reports that document all field BMPs needing repair or replacement. The Contractor is to clearly document specific BMPs needing repair and location each work day. The Contractor is encouraged to be proactive in fixing BMPs without TxDOT direction.

   - Provide documentation required for Waters of the US, Note #3 and submittals for Item 496 bridge removal. Bridge removal methods submitted will follow all Waters of the US note requirements. The Contractor is not to start construction within the Ordinary High Water Marks of any stream until receiving approval for stream channel construction methods from TxDOT.

   - Provide a written procedure for managing all chemicals and construction items placed in vertical containment structures. Also, provide methods to be used for the treatment, disposal, collection or release of storm water.

   - Provide an estimated date by letter, for the submittal of marked up bridge drawings, indicating cut locations for any structural steel requiring cutting or torching of steel, coated with lead containing paints.

2. Place and maintain trash cans and portable sanitary facilities at locations where there is active construction. Worker generated trash and construction debris will be kept from being transported by storm water and will be collected daily from the ground and routinely hauled from the work area.

3. Contractor will provide TxDOT copies of all correspondence with MS4s, TCEQ, EPA, DSHS and Corps of Engineers regarding activities on this project.

4. Contractor to conduct storm water inspections and develop SWPPP documents to support Contractor permits obtained for the project including PSL(s).

5. Contractor will maintain written documentation of locations of all portable sanitary facilities. The Contractor is required to document the location and disposition of all spills and cleanups from portable sanitary facilities.

6. Contractor will not store chemicals on TxDOT ROW, unless chemicals are stored following all environmental and safety regulations. Fuels for construction equipment will not be stored on TxDOT ROW.

7. The Contractor will store fuels and bulk chemicals on Contractor PSL(s) using a secondary containment method, such as double lined tanks and/or free standing containment reservoirs made of plastic or steel designed to hold bulk chemicals or drums.

8. The Contractor will not remove sediment controls without the prior approval of TxDOT, except for a sediment control that may back up water and cause safety or traffic problems.

SCALE = NTS SHEET 1 OF 10

Texas Department of Transportation
Waco District Standard

TYPICAL APPLICATIONS FOR BEST MANAGEMENT PRACTICES

TA-BMP

FILE: BMPLAYOUTS.dgn	DN:		CK:	DW:	CK:
© TxDOT 2009	CONT	SECT	JOB		HIGHWAY
REVISIONS DEC 2013 FEB 2015	0055	15	072		US 84
	DIST	COUNTY			SHEET NO.
	WAC	MCLENNAN			429

BEST MANAGEMENT PRACTICE (BMP) GENERAL NOTES

9. Any sediment controls removed by the Contractor must be re-installed before the next rainfall event or by the end of day, as approved in advance.

10. Vegetative buffer strips may be used in place of temporary sediment controls such as silt fences and rock filter dams. The amount of disturbed soil area will be limited to 1/3 of an acre or less for a minimum of 50 feet of grassed ditch and 2/3 of an acre of disturbed soil for a minimum of 100 feet of grassed ditch.

11. Construction equipment found to be leaking oil, fuel or coolant will be immediately stopped, the leaking fluid collected and the equipment fixed. Equipment continuing to leak will be removed from the project at no cost to TxDOT. Leaking fluids from equipment will be collected and removed from the project or PSL.

12. Earth berms or mounds typically used to stockpile topsoil and used in place of boundary silt fence will be seeded upon being constructed. Long term use of earth berms or mounds will not be continued without establishing grass on the control.

13. The Contractor will inform TxDOT of new areas where soil will be disturbed to facilitate planning for new sediment controls. Areas of vegetated soil will not be disturbed by the Contractor, unless adequate sediment controls can be installed before the next rainfall event. The Contractor will assist TxDOT in keeping an accurate set of working SWPPP drawings that show the locations of all temporary sediment and erosion controls.

14. The Contractor will maintain an adequate amount of temporary sediment controls on hand at the field office or project staging area for critical SWPPP maintenance, including silt fence (minimum of 200 feet) and rock / fabric for rock filter dams (minimum for 100 feet of Type III dams).

    The requirement for BMP rock quantities on hand is waived for small projects for on and off system bridge installations. The Contractor having a BMP Subcontractor does not eliminate the requirement for the Contractor to have the required silt fence and rock on hand, typically stored at the Contractor PSL.

15. Failure of a sub-contractor to complete storm water work on time will require the Contractor to start storm water sediment control work immediately and complete the work with high priority, or be subject to stop work on the entire project.

16. Earth materials on roads as a result of soil tracking will not be allowed to be transported off ROW in storm water. Soil or rock material found on roadways deposited from Contractor equipment will be removed daily.

17. Unless approved, completed concrete curb inlets will not be blocked by sediment controls. The contractor will frequently sweep the completed or partially completed roadway to keep sediment out of drainage pipes.

18. The Contractor will be responsible for proper dust control and will route construction traffic in a manner that minimizes dust generation.

19. Water for dust control will contain no pollutants, but may be non-potable from upland stock ponds. No quantity of water to be used for construction purposes may be taken from a 404 stream, prior to the proper authorizations or permits being obtained by the Contractor.

20. Contractor is to direct workers and sub-contractors to use portable sanitary facilities provided by the Contractor and not to trespass off ROW.

21. Contractor will provide written verification to TxDOT that earth borrow pits and disposal sources meet environmental and regulatory requirements, prior to use. Excavations will meet all OSHA requirements and the current safety guidelines established for TxDOT Quarries and Pits.

22. Boundary silt fences that are terminated down slope, with one end being at the lowest elevation, will be installed with an L - hook to contain sediment. Boundary silt fences that are installed on flat ground will have L-hooks on both ends.

23. Rock filter dams across ditches will be constructed where the rock filter dam ends are embedded within the ditch side slopes and ditch bottom. The top center elevation of the rock filter dam will be at least 6 inches lower than the elevations on the rock filter dam ends.

24. Silt fence will be constructed in a U or V pattern across ditch lines and up the ditch side slope to keep storm water from flowing around the ends of the silt fence. Small silt fences that do not adequately span the ditch and allows storm water around the end(s) will not be used. Where there is adequate space, large U pattern silt fences are preferred to facilitate sediment collection and sediment removal with equipment.

25. Sediment controls (RFDs or silt fences) will be located along road ditches as marked on the SWPPP drawings. Modifications to the sediment control spacing will be adjusted during the project based on sediment control effectiveness. The installation and maintenance of sediment controls at or near outfalls, where storm water leaves TxDOT ROW, takes persistent over ditch line sediment controls.

Texas Department of Transportation
Waco District Standard

TYPICAL APPLICATIONS FOR BEST MANAGEMENT PRACTICES

TA-BMP

FILE: BMPLAYOUTS.dgn	DN:	CK:	DW:	CK:
© TxDOT 2009	CONT.	SECT	JOB	HIGHWAY
REVISIONS	0055	15	072	US 84
DEC 2013	DIST	COUNTY		SHEET NO.
FEB 2015	WAC	MCLENNAN		430

BEST MANAGEMENT PRACTICE (BMP) GENERAL NOTES

26. Storm water draining sheet flow over disturbed soil sloped towards the ROW property line, will be intercepted by a boundary silt fence typically installed with L-shaped ends.

27. For ditch grading and shoulder up work, the Contractor is limited during good weather to remove up to one mile (limited to five acres of disturbed soil) of ditch line sediment controls; on one side of the roadway. Outfall controls cannot be removed during this activity. Ditch line controls must be replaced upon completion of work and before the next rain event.

28. Sediment controls damaged by the Contractor, as defined by permit, must be fixed or replaced immediately upon discovery.

29. Notches in silt fences are not typically allowed. Specific silt fences that back up water onto lanes of traffic may be notched if approved.

30. For silt fence maintenance, the Contractor will leave approximately 4 inches of deposited sediment up stream of silt fences and not over excavate around silt fences or rock filter dams.

31. The Contractor will inform TxDOT of new construction areas and where soil is planned to be disturbed. Sediment controls will be installed at outfalls prior to the Contractor beginning soil disturbing activities up slope from the outfall.

32. Water from concrete saw cutting, concrete grinding and concrete coring activities; or fine materials from concrete chipping and salvage will not be allowed to enter storm drains or enter streams.

33. Storm water containing suspended sediment and turbidity needing to be removed from excavations or low areas will be pumped or gravity drained through vegetated buffer strips (50 foot minimum) or placed in ditches with temporary sediment controls, prior to the water being discharged into a stream.

34. Uncontaminated water from natural groundwater seepage, springs, foundations and drains that does not contain suspended sediment or any pollutants may be discharged without storm water controls.

35. Lime or cement if spilled in ditches or outside the defined limits of application is considered a pollutant and will be excavated and removed the same day, to avoid contaminating streams.

36. If located along the project ROW, RAP stockpiles will be located where there is a minimum 100 feet of vegetative buffer strip before storm water will reach a stream. RAP will not be used as a construction material within the Ordinary High Water Marks of a stream channel of a 404 designated stream.

37. If allowed on the project, concrete truck wash out areas will have adequate volume to allow 12 inch freeboard for rain and will be lined with 6 mils of plastic. No concrete will be stored higher than the 12 inch freeboard. Cleaning of truck chutes and equipment does not constitute concrete truck wash out and this activity may be completed at the concrete placement location. Wash out areas will not be located closer than 50 ft from down slope inlets or stream channels.

38. For outfalls near stock ponds closer than 50 foot from disturbed soil at the ROW line, redundant sediment controls will be provided, typically a combination of rock filter dam and a silt fence constructed in line of the flow.

39. Earth stockpiles will utilize silt fence sediment controls, positioned on the low end of the stockpile drainage area with L-hooks or silt fence installed around the entire stockpile.

40. Sediment controls including rock filter dams and silt fences will not be installed across any 404 streams. Sediment controls at 404 streams will be positioned to limit sediment entering the stream from the banks and around structures/culverts, and will allow free flow of storm water to pass through the ROW without being dammed by any sediment controls. Remove loose materials from stream channels prior to each rain event.

41. Sediment controls for non-404 streams may be constructed across the drainage channel in unlimited locations. It is appropriate to use sediment control details typically used for 404 streams for non-404 streams when flow velocities are high. Remove loose material from stream channels prior to each rain event.

42. Incomplete drainage pipe installation across the roadway does not remove the requirement for having sediment controls around the ends of the pipe. To stay within permit requirements, sediment controls should be installed over and around the terminated end and along each side of the banks as soon as construction on the pipe has been completed. Remove loose material from stream channels prior to each rain event.

43. Safety end / headwall construction temporarily will require the removal of part of the sediment control placed over and around the pipe end. Retain in place as much functioning sediment control as possible. Replace the silt fence over and around the top of the pipe, immediately upon concrete placement and form removal. Do not remove culvert sediment controls that cannot be replaced before the next rain event. Sediment control at the ends of culverts must be in place and available for any rain event until the disturbed soil areas are re-vegetated.

Texas Department of Transportation
Waco District Standard

TYPICAL APPLICATIONS FOR BEST MANAGEMENT PRACTICES

TA-BMP

FILE: BMPLAYOUTS.dgn	DN:		CK:	DW:		CK:	
© TxDOT 2009	CONT	SECT	JOB		HIGHWAY		
REVISIONS	0055	15	072		US 84		
DEC 2013 FEB 2015	DIST	COUNTY			SHEET NO.		
	WAC	MCLENNAN			431		

BEST MANAGEMENT PRACTICE (BMP) GENERAL NOTES

44. Between the Ordinary High Water Marks of a 404 stream channel, the Contractor will disturb only the minimum amount of stream channel that is necessary to complete the work.

45. Rock riprap for erosion control does not replace the requirements to maintain sediment control until vegetation is re-established. Replace sediment controls immediately after installing erosion rock.

46. At the direction of TxDOT, sediment deposited into existing and new culverts will be removed subsidiary to Item 506. Sediment to be removed is either pre-existing material before construction starts or sediment generated as a part of this project.

47. Provide treated 2X4 cross bracing for rectangular inlet silt fence, subsidiary to Item 506.

48. Loose or granular earth materials will not be used to repair silt fence undercuts. Silt fence undercut repairs will be conducted with well compacted soils or the silt fence will be reset in a nearby location.

49. Silt fence steel T posts of approximately 1.25 pounds per foot are allowed at a spacing of 8 feet or less. Silt fence steel T posts between approximately 1.25 pounds per foot and 0.85 pounds per foot are allowed for T post spacing of 5 feet or less.

50. Silt fence to be used to slow the flow of storm water down slopes will be positioned approximately horizontal (on the contour) with L hooks on the ends and limited to approximately 200 feet in length. Multiple sections and levels of silt fence may be required in addition to temporary / permanent erosion control flumes.

51. Soil retention blankets will be installed rolled down the slope with the small dimension side embedded at the top of slope, unless recommended otherwise by the manufacturer. Excess grass, rocks, trash, debris or clods will be removed before seeding and installing soil retention blankets. All installations will be by the manufacturer recommendations. Contractor equipment, including tractor mowers will be kept off areas with soil retention blankets until the grass is established.

Texas Department of Transportation
Waco District Standard

TYPICAL APPLICATIONS FOR BEST MANAGEMENT PRACTICES

TA-BMP

FILE: BMPLAYOUTS.dgn	DN:		CK:	DW:		CK:
© TxDOT 2009	CONT	SECT	JOB		HIGHWAY	
REVISIONS DEC 2013 FEB 2015	0055	15	072		US 84	
	DIST	COUNTY			SHEET NO.	
	WAC	MCLENNAN			432	

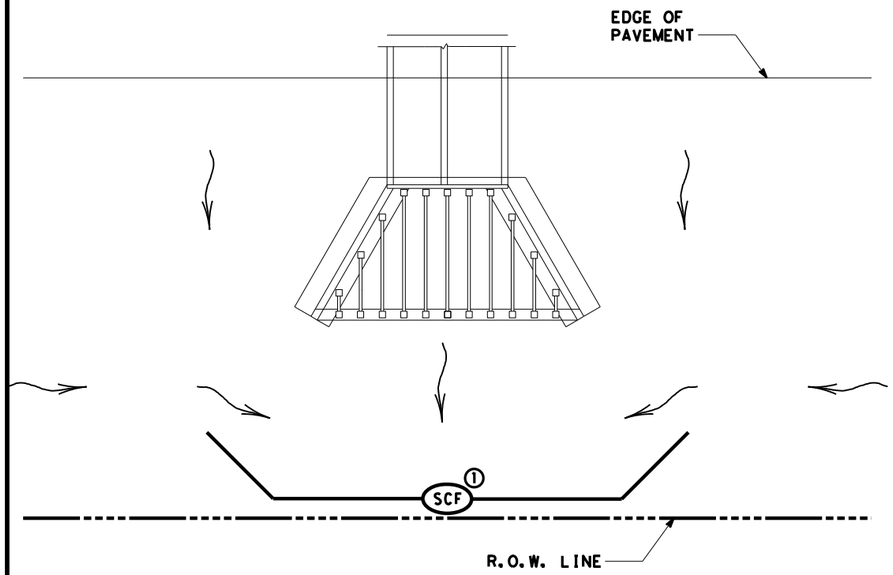

BEST MANAGEMENT PRACTICE (BMP) #1

FOR NON-404 STREAMS ONLY ~ SEDIMENT CONTROL AT EXIT OF CULVERT

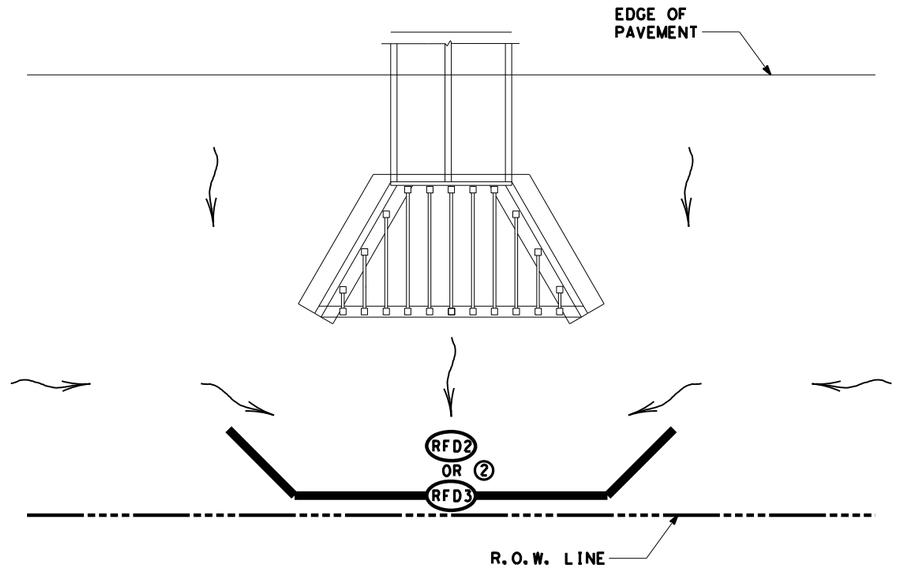

BEST MANAGEMENT PRACTICE (BMP) #2

FOR NON-404 STREAMS ONLY ~ SEDIMENT CONTROL AT EXIT OF CULVERT

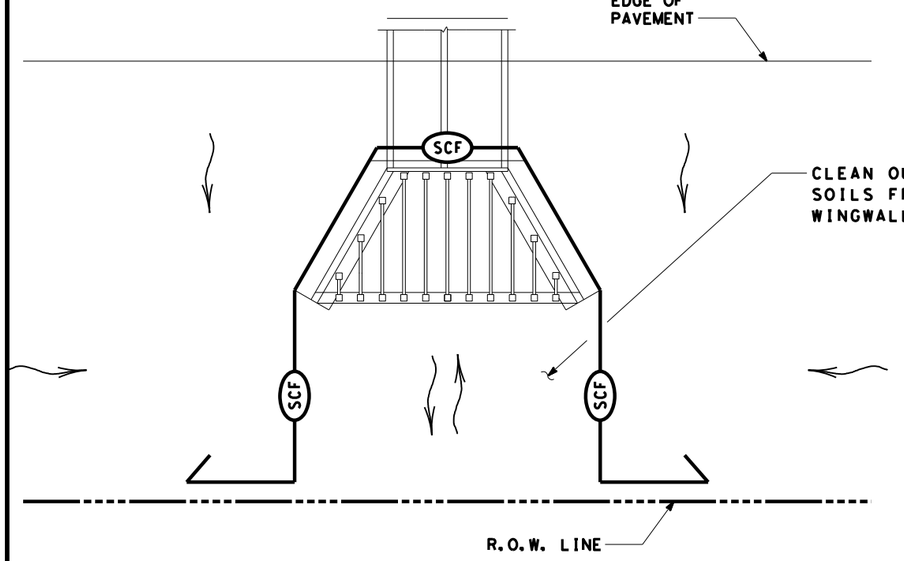

BEST MANAGEMENT PRACTICE (BMP) #3

FOR 404 OR NON-404 STREAMS ~ SEDIMENT CONTROL AT EXIT OR ENTRANCE OF CULVERT

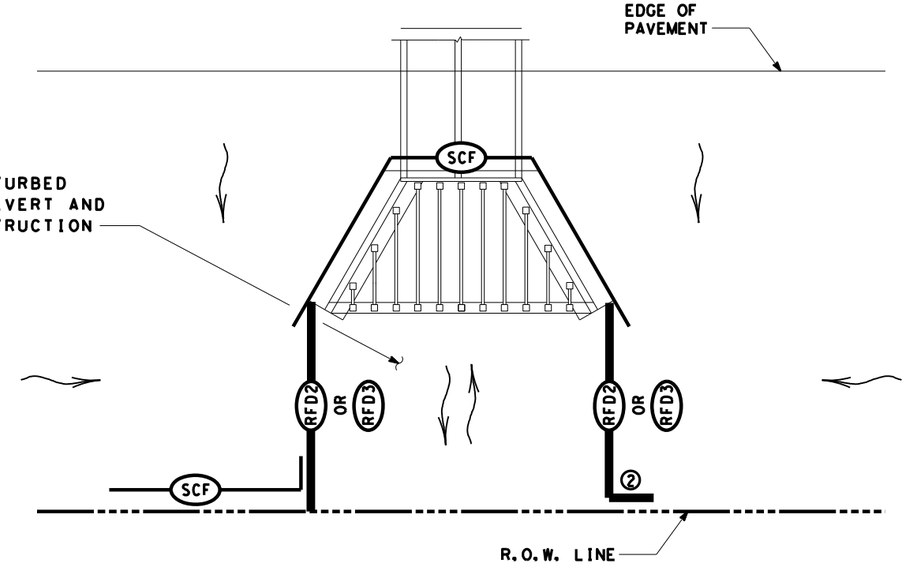

BEST MANAGEMENT PRACTICE (BMP) #4

FOR 404 OR NON-404 STREAMS ~ SEDIMENT CONTROL AT EXIT OR ENTRANCE OF CULVERT

SCF	SEDIMENT CONTROL FENCE
RFD2	ROCK FILTER DAM (TY 2)
RFD3	ROCK FILTER DAM (TY 3)
	DIRECTION OF FLOW

NOTES:

1. EXTEND SILT FENCE SO STORM WATER DOES NOT GO AROUND THE ENDS. USE L-HOOKS ON ENDS AS REQUIRED.
2. EXTEND ROCK FILTER DAM SO STORM WATER DOES NOT GO AROUND THE ENDS.

SCALE = NTS SHEET 5 OF 10

Texas Department of Transportation
Waco District Standard

TYPICAL APPLICATIONS FOR BEST MANAGEMENT PRACTICES

TA-BMP

FILE: BMPLAYOUTS.dgn	DN: TXDOT	CK: TXDOT	DW: TXDOT	CK: TXDOT
© TxDOT 2009	CONT	SECT	JOB	HIGHWAY
REVISIONS	0055	15	072	US 84
DEC 2013	DIST	COUNTY		SHEET NO.
FEB 2015	WAC	MCLENNAN		433

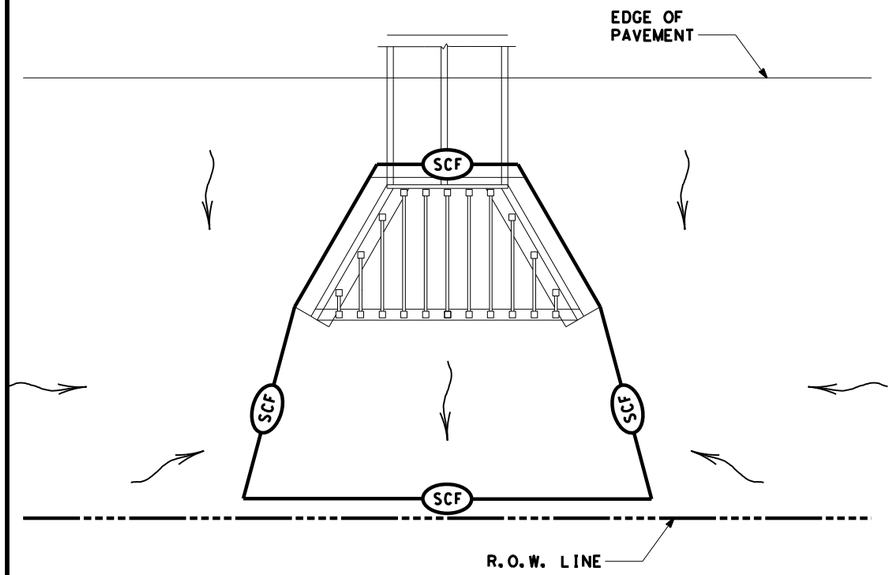

BEST MANAGEMENT PRACTICE (BMP) #5

FOR NON-404 STREAMS ONLY ~ SEDIMENT CONTROL AT EXIT OF CULVERT

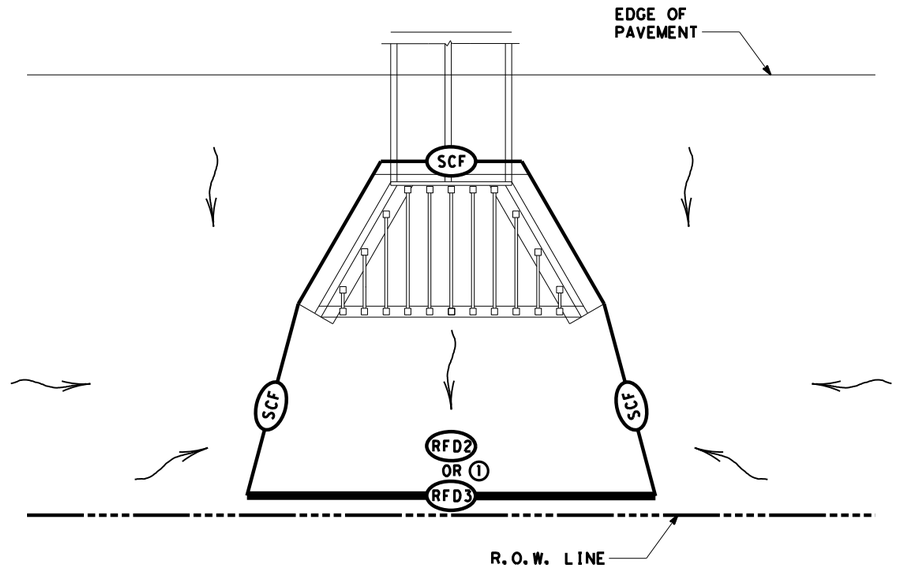

BEST MANAGEMENT PRACTICE (BMP) #6

FOR NON-404 STREAMS ONLY ~ SEDIMENT CONTROL AT EXIT OF CULVERT

SCF	SEDIMENT CONTROL FENCE
RFD2	ROCK FILTER DAM (TY 2)
RFD3	ROCK FILTER DAM (TY 3)
	DIRECTION OF FLOW

NOTES:

① PROVIDE OVERLAP OF SILT FENCE WITH ROCK FILTER DAM.

② USE SILT FENCE L-HOOKS ON ENDS TO BLOCK STORM WATER SEDIMENT

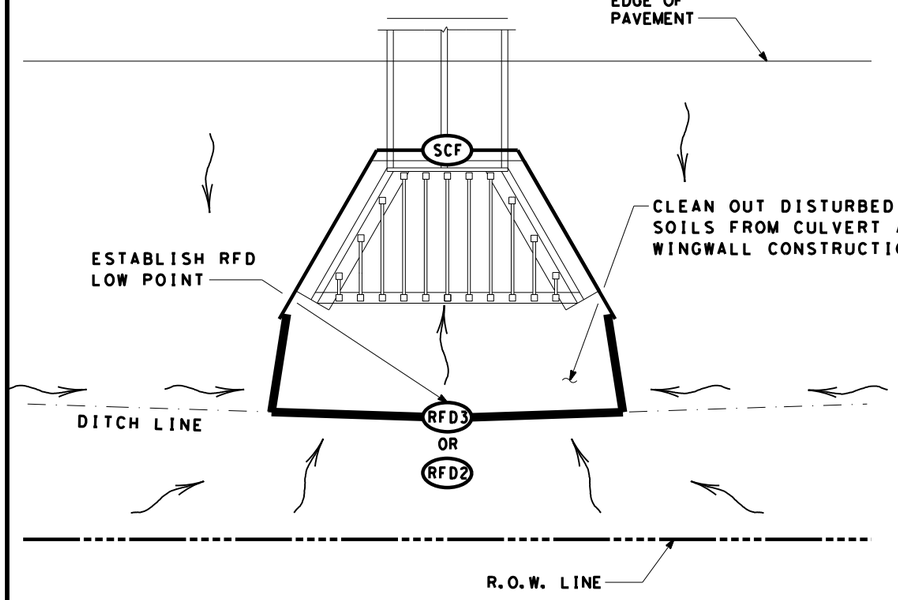

BEST MANAGEMENT PRACTICE (BMP) #7

FOR NON-404 STREAMS ONLY ~ SEDIMENT CONTROL AT ENTRANCE OF CULVERT

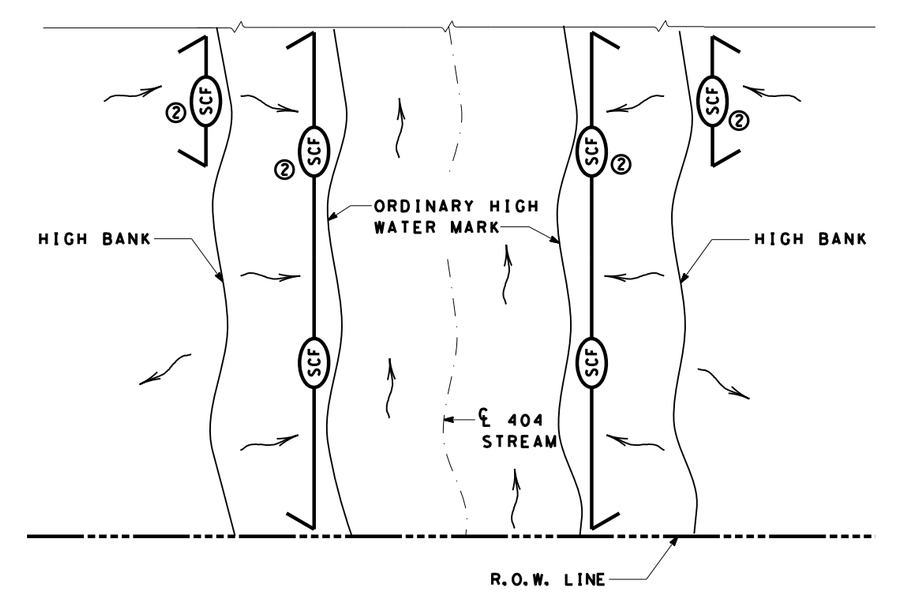

BEST MANAGEMENT PRACTICE (BMP) #8

FOR 404 STREAMS ~ SEDIMENT CONTROL DURING PROJECT CLEARING AND GRUBBING

SCALE = NTS SHEET 6 OF 10

Texas Department of Transportation
Waco District Standard

TYPICAL APPLICATIONS FOR BEST MANAGEMENT PRACTICES

TA-BMP

FILE: BMPLAYOUTS.dgn	DN: TXDOT	CK: TXDOT	DW: TXDOT	CK: TXDOT
© TxDOT 2009	CONT	SECT	JOB	HIGHWAY
REVISIONS DEC 2013 FEB 2015	0055	15	072	US 84
	DIST	COUNTY		SHEET NO.
	WAC	MCLENNAN		434

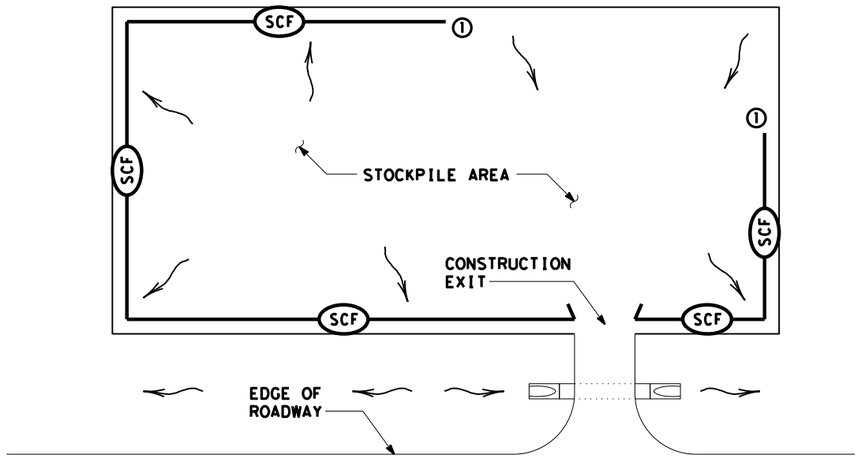

BEST MANAGEMENT PRACTICE (BMP) #9

STOCKPILE SEDIMENT CONTROL

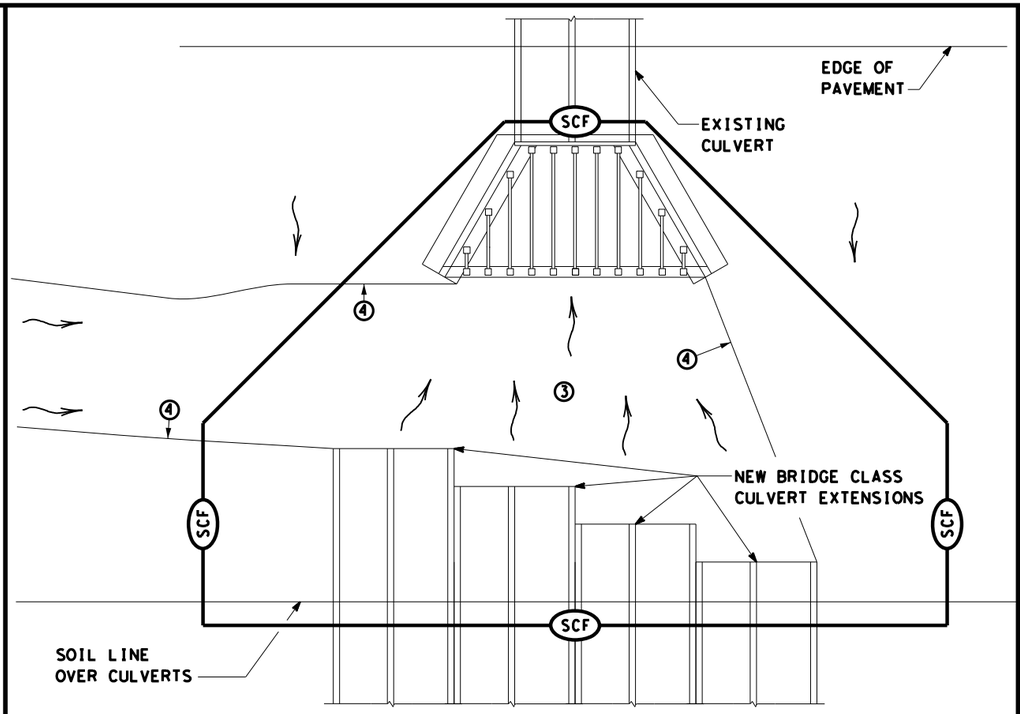

BEST MANAGEMENT PRACTICE (BMP) #10

FOR 404 OR NON-404 STREAMS ONLY ~
SEDIMENT CONTROL AT PHASED CONSTRUCTION OF BRIDGE CLASS CULVERTS

SCF	SEDIMENT CONTROL FENCE
RFD2	ROCK FILTER DAM (TY 2)
RFD3	ROCK FILTER DAM (TY 3)
	DIRECTION OF FLOW

NOTES:

① START SEDIMENT CONTROL AT LOCATION SO ALL STORM WATER WITH SEDIMENT IS COLLECTED

② ROCK FILTER DAMS OR EARTH/GRASSED EMBANKMENTS CAN BE SUBSTITUTED AS DIRECTED.

③ PROVIDE A SMOOTH TRANSITION FROM THE INVERT ELEVATIONS BETWEEN CULVERTS. REMOVE LOOSE SOIL FROM EXCAVATED AREA BETWEEN CULVERTS.

④ PROVIDE AND INSTALL PNEUMATICALLY PLACED CONCRETE ON THE DITCH BOTTOM AND SIDE SLOPES BETWEEN TEMPORARY TERMINATIONS BETWEEN OLD AND NEW CULVERTS. PNEUMATICALLY PLACED CONCRETE WILL BE PLACED TO THE HEIGHT OF THE LARGEST CULVERT ON THE DITCH SIDE SLOPES; AND TO A LIMIT 10 FEET OUTSIDE THE LOCATION OF BMPS ALONG THE DITCH BOTTOM. CEMENT STABILIZED SAND MAY BE SUBSTITUTED FOR PNEUMATICALLY PLACED CONCRETE, IN AREAS WHERE INSTALLATION WORKS AND AT THE OPTION OF TXDOT.

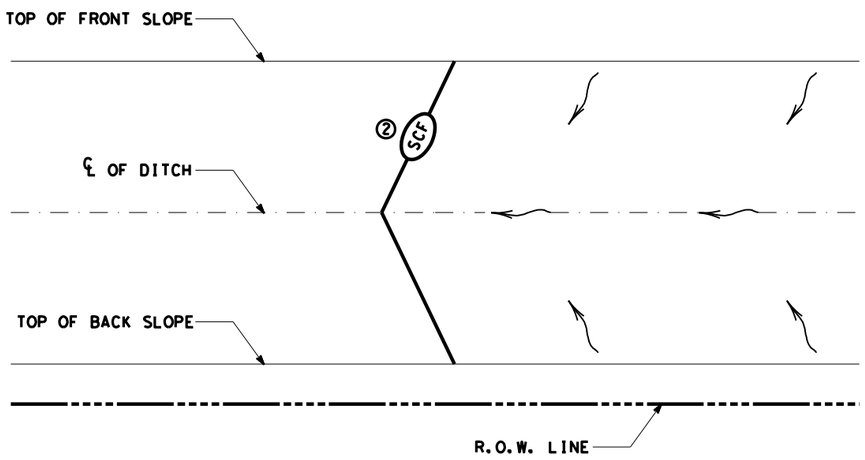

BEST MANAGEMENT PRACTICE (BMP) #11

BOUNDRY SEDIMENT CONTROL ~ BOTH ENDS OF CONTROL TERMINATED UP SLOPE

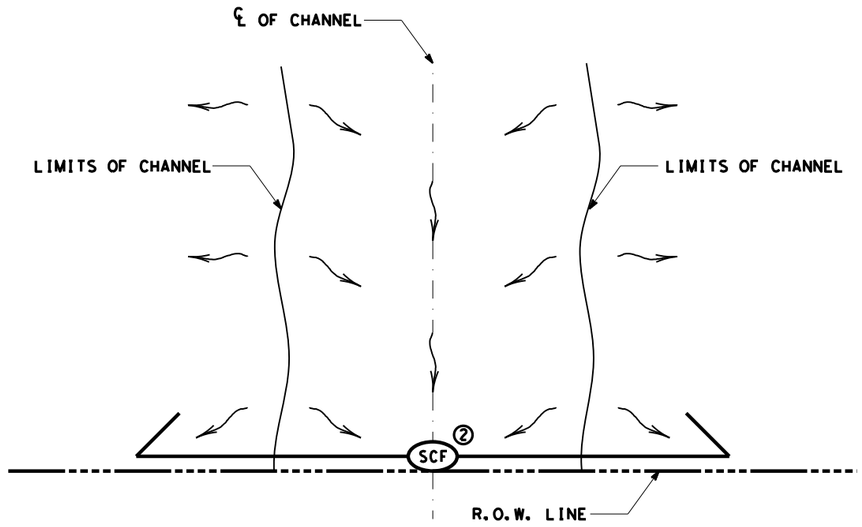

BEST MANAGEMENT PRACTICE (BMP) #12

BOUNDRY SEDIMENT CONTROL ~ BOTH ENDS OF CONTROL TERMINATED DOWN SLOPE

SCALE = NTS SHEET 7 OF 10

Texas Department of Transportation
Waco District Standard

TYPICAL APPLICATIONS FOR BEST MANAGEMENT PRACTICES

TA-BMP

FILE: BMPLAYOUTS.dgn		DN: TXDOT		CK: TXDOT	DW: TXDOT		CK: TXDOT
©TxDOT 2009		CONT	SECT	JOB		HIGHWAY	
REVISIONS		0055	15	072		US 84	
DEC 2013		DIST	COUNTY			SHEET NO.	
FEB 2015		WAC	MCLENNAN			435	

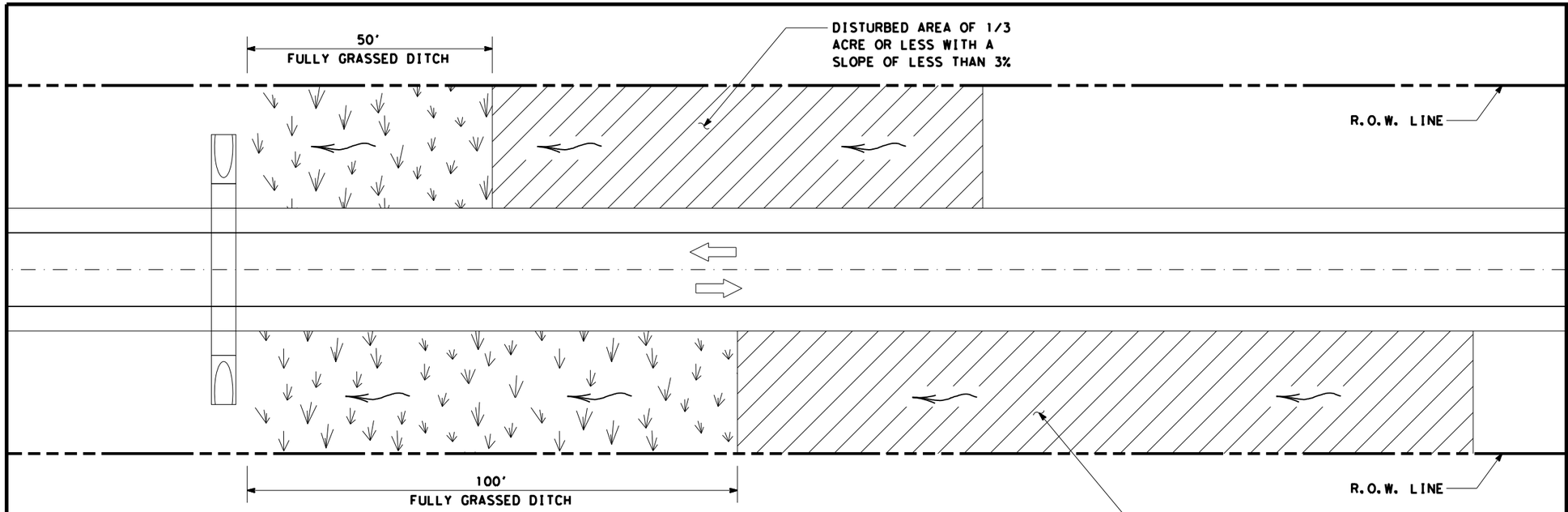

BEST MANAGEMENT PRACTICE (BMP) #13

USE OF VEGETATIVE BUFFERS IN PLACE OF TEMPORARY SEDIMENT CONTROLS SUCH AS SILT FENCE AND ROCK FILTER DAMS

	FULLY GRASSED DITCH
	DISTURBED AREA
	DIRECTION OF FLOW
SCF	SEDIMENT CONTROL FENCE

① FOR H DIMENSIONS LESS THAN 1.5' SILT FENCE MAY NEED TO BE NOTCHED AS SHOWN IN VIEW A-A. ADD EXTRA POSTS AT NOTCH.

② BMP #14 MAY BE USED AT CROSS DRAINAGE STRUCTURES AS DIRECTED.

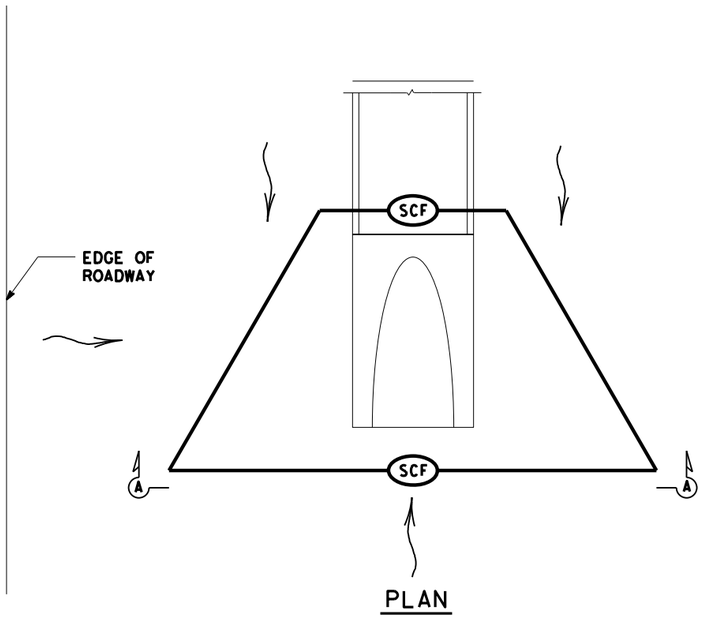

PLAN

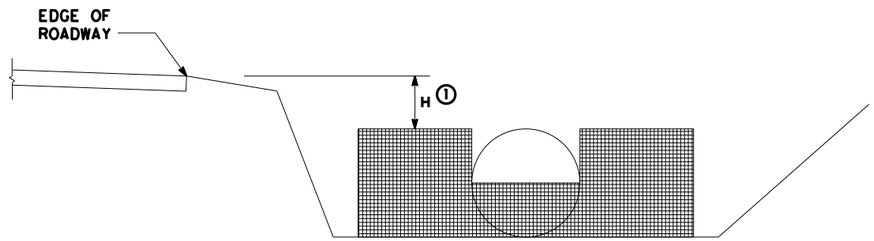

VIEW A-A

BEST MANAGEMENT PRACTICE (BMP) #14

NON-404 STREAMS AND DITCHES ONLY - SEDIMENT CONTROL AT PARALLEL DRAINAGE STRUCTURE ENTRANCE ②

SCALE = NTS SHEET 8 OF 10

Texas Department of Transportation
Waco District Standard

TYPICAL APPLICATIONS FOR BEST MANAGEMENT PRACTICES

TA-BMP

FILE: BMPLAYOUTS.dgn	DN: TXDOT		CK: TXDOT	DW: TXDOT	CK: TXDOT
© TxDOT 2009	CONT	SECT	JOB		HIGHWAY
REVISIONS DEC 2013 FEB 2015	0055	15	072		US 84
	DIST	COUNTY			SHEET NO.
	WAC	MCLENNAN			436

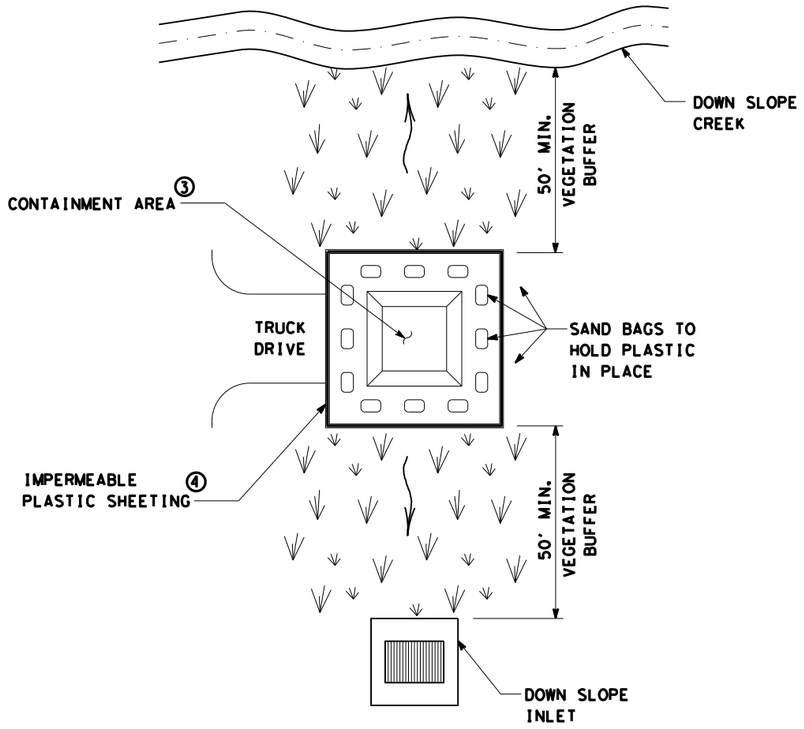

BEST MANAGEMENT PRACTICE (BMP) #15

CONCRETE TRUCK WASHOUT AREA

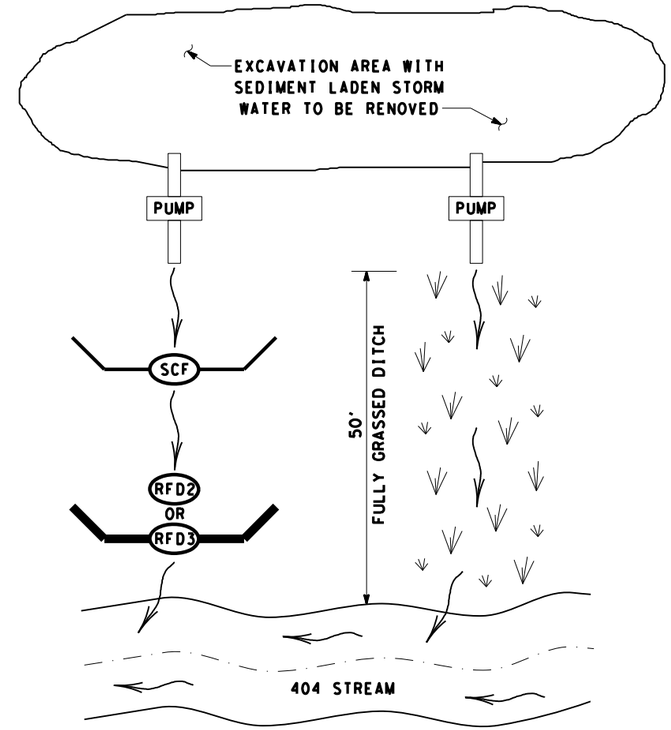

BEST MANAGEMENT PRACTICE (BMP) #16

PUMPED STORM WATER SEDIMENT CONTROLS ①

	FULLY GRASSED DITCH
	DIRECTION OF FLOW
SCF	SEDIMENT CONTROL FENCE
RFD2	ROCK FILTER DAM (TY 2)
RFD3	ROCK FILTER DAM (TY 3)

① PUMPED STROM WATER FROM AN EXCAVATION AREA SHOULD BE DISCHARGED IN A 50' VEGETATIVE BARRIER OR THROUGH TWO TEMPORARY SEDIMENT CONTROLS BEFORE ENTERING A 404 STREAM.

② FOR LANDOWNER STOCKPONDS WITHIN 50' OF THE RIGHT OF WAY LINE, PROVIDE REDUNDANT SEDIMENT CONTROLS AT THE CONVEYANCE OF THE POND. MINIMUM OF TWO SEDIMENT CONTROLS.

③ WHEN CONTAINMENT AREA REACHES 1' FREEBOARD, DISCONTINUE WASHOUT PLACEMENT AND REMOVE MATERIAL UPON SOLIDIFICATION.

④ EACH TIME SOLIDIFIED MATERIAL IS REMOVED REPLACE PLASTIC SHEETING.

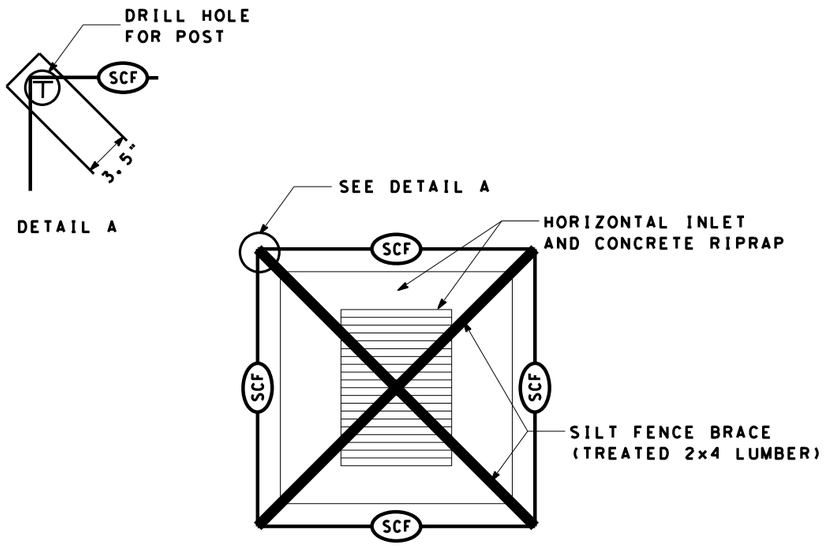

BEST MANAGEMENT PRACTICE (BMP) #17

HORIZONTAL INLET SEDIMENT CONTROL

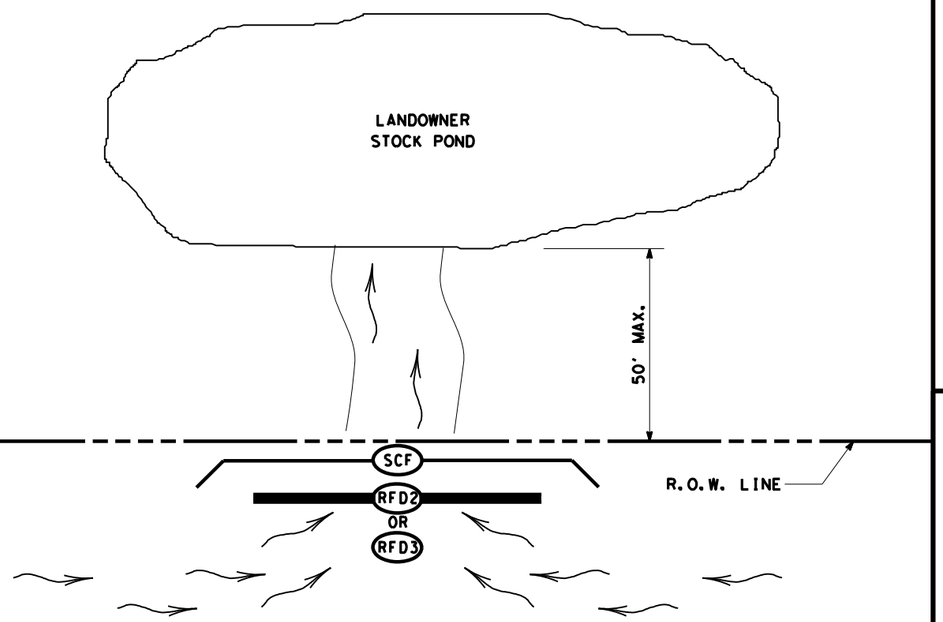

BEST MANAGEMENT PRACTICE (BMP) #18

LANDOWNER STOCKPOND SEDIMENT CONTROL ②

SCALE = NTS SHEET 9 OF 10

Texas Department of Transportation
Waco District Standard

TYPICAL APPLICATIONS FOR BEST MANAGEMENT PRACTICES

TA-BMP

FILE: BMPLAYOUTS.dgn	DN: TXDOT	CK: TXDOT	DW: TXDOT	CK: TXDOT
©TxDOT 2009	CONT	SECT	JOB	HIGHWAY
REVISIONS DEC 2013 FEB 2015	0055	15	072	US 84
	DIST	COUNTY		SHEET NO.
	WAC	MCLENNAN		437

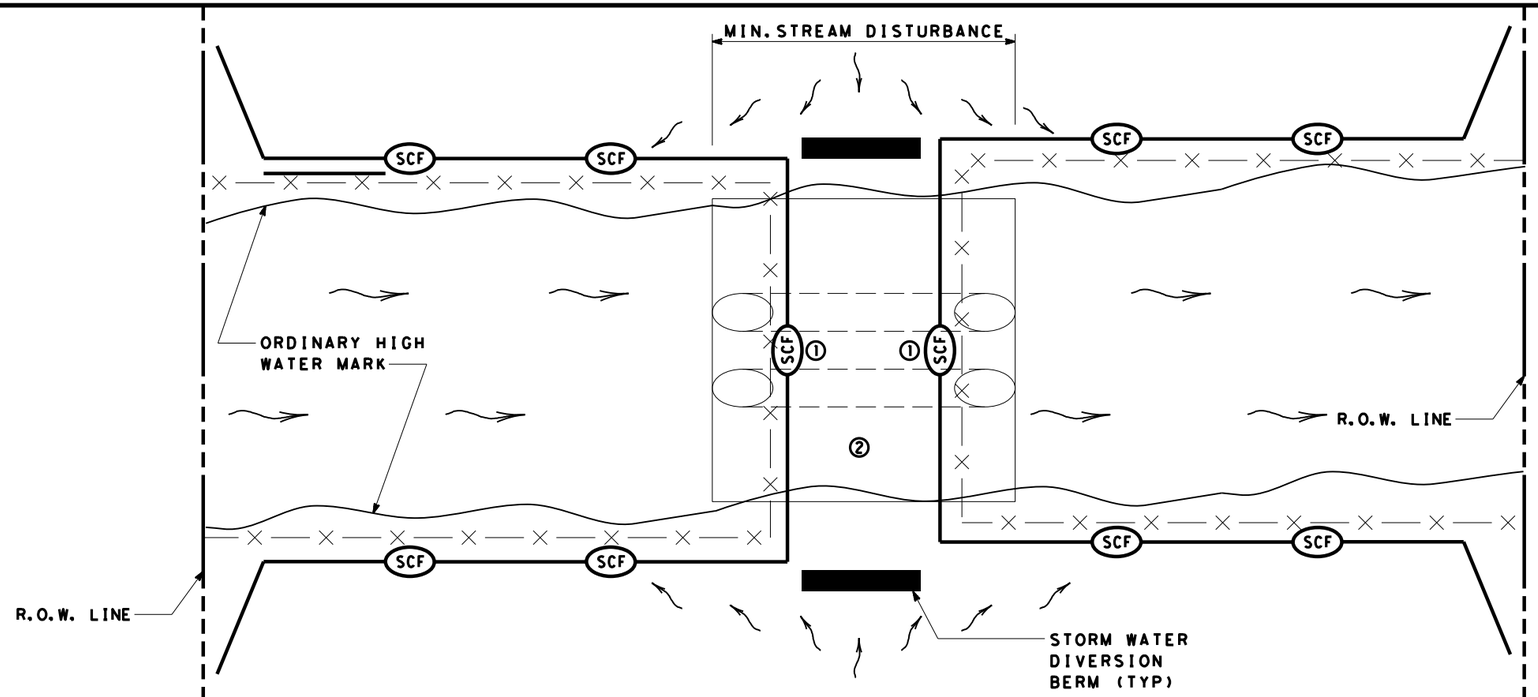

BEST MANAGEMENT PRACTICE (BMP) #19

TYPICAL 404 STREAM CROSSING (SEDIMENT CONTROL AT CROSSING)

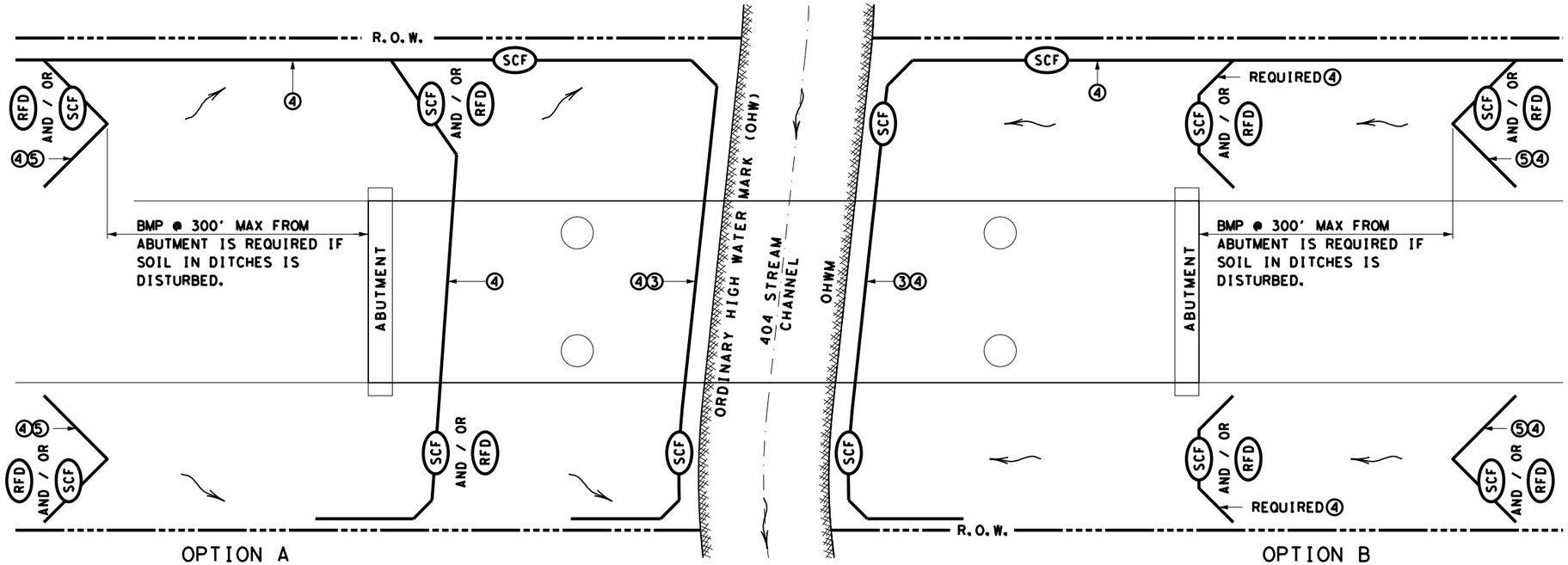

BEST MANAGEMENT PRACTICE (BMP) #20

FOR 404 STREAMS ~ BMP'S AT BRIDGES

	DIRECTION OF FLOW
SCF	SEDIMENT CONTROL FENCE
RFD	ROCK FILTER DAM
× — ×	SECURITY FENCING

① HAY BALES MAY BE SUBSTITUTED FOR SILT FENCE OVER THE STREAM CROSSING.

② CROSSING WILL BE AS PER REQUIREMENTS OF THE WATERS OF THE US GENERAL NOTES.

③ INSTALL SILT FENCE SLIGHTLY UP FROM OHW MARK FROM R.O.W. TO R.O.W.

④ USE SILT FENCE L-HOOKS ON LEVEL OR DOWN SLOPING ENDS TO BLOCK STORM WATER SEDIMENT

⑤ INSTALL LARGE V OR U SHAPED BMP'S FROM ABUTMENT AS SHOWN. IF THERE IS STEEP DITCH CONDITIONS DECREASE SPACING AND CONSIDER RFD'S. ADD ADDITIONAL BMP'S IF GRADE IS STEEP OR IF FLOW IS HIGH.

SCALE = NTS SHEET 10 OF 10

Texas Department of Transportation
Waco District Standard

TYPICAL APPLICATIONS FOR BEST MANAGEMENT PRACTICES

TA-BMP

FILE: BMPLAYOUTS.dgn	DN: TXDOT		CK: TXDOT	DW: TXDOT	CK: TXDOT
© TxDOT 2009	CONT	SECT	JOB		HIGHWAY
REVISIONS DEC 2013 FEB 2015	0055	15	072		US 84
	DIST	COUNTY			SHEET NO.
	WAC	MCLENNAN			438

DISCLAIMER:
The use of this standard is governed by the "Texas Engineering Practice Act". No warranty of any kind is made by TxDOT for any purpose whatsoever. TxDOT assumes no responsibility for the conversion of this standard to other formats or for incorrect results or damages resulting from its use.

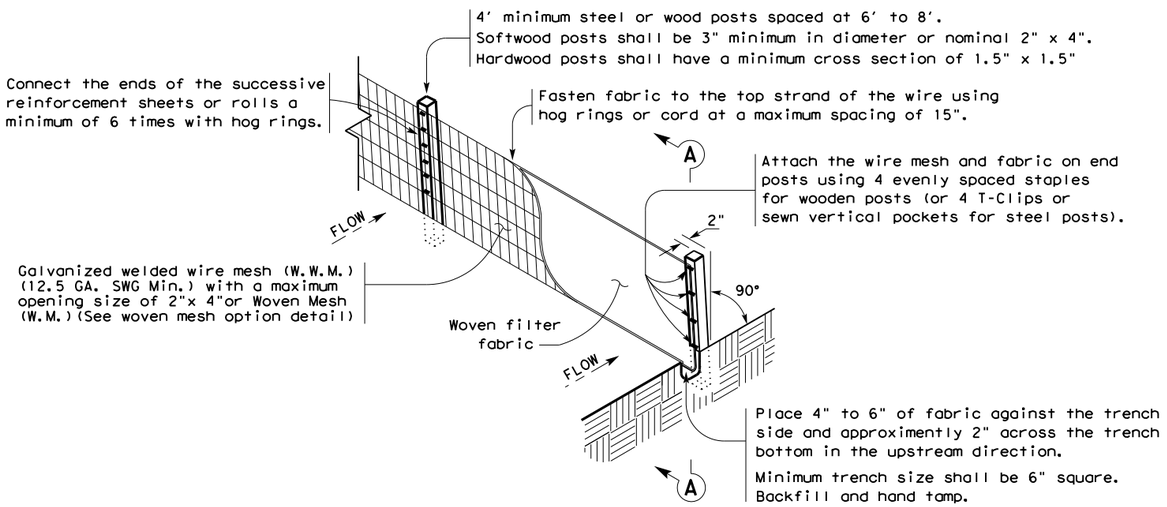

TEMPORARY SEDIMENT CONTROL FENCE

SCF

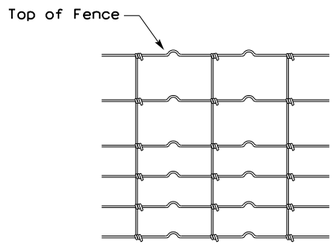

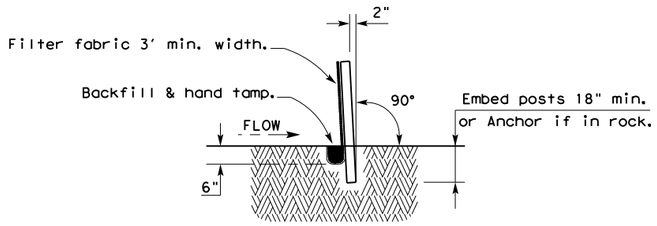

SECTION A-A

HINGE JOINT KNOT WOVEN MESH (OPTION) DETAIL

Galvanized hinge joint knot woven mesh (12.5 GA.SWG Min.) requires a minimum of five horizontal wires spaced at a maximum of 12 inches apart and all vertical wires spaced at a maximum of 12 inches apart.

SEDIMENT CONTROL FENCE USAGE GUIDELINES

A sediment control fence may be constructed near the downstream perimeter of a disturbed area along a contour to intercept sediment from overland runoff. A 2 year storm frequency may be used to calculate the flow rate to be filtered.

Sediment control fence should be sized to filter a maximum flow through rate of 100 GPM/FT^2. Sediment control fence is not recommended to control erosion from a drainage area larger than 2 acres.

LEGEND

Sediment Control Fence

SCF

GENERAL NOTES

1. Vertical tracking is required on projects where soil distributing activities have occurred unless otherwise approved.
2. Perform vertical tracking on slopes to temporarily stabilize soil.
3. Provide equipment with a track undercarriage capable of producing linear soil impressions measuring a minimum of 12" in length by 2" to 4" in width by 1/2" to 2" in depth.
4. Do not exceed 12" between track impressions.
5. Install continous linear track impressions where the minimum 12" length impressions are perpendicular to the slope or direction of water flow.

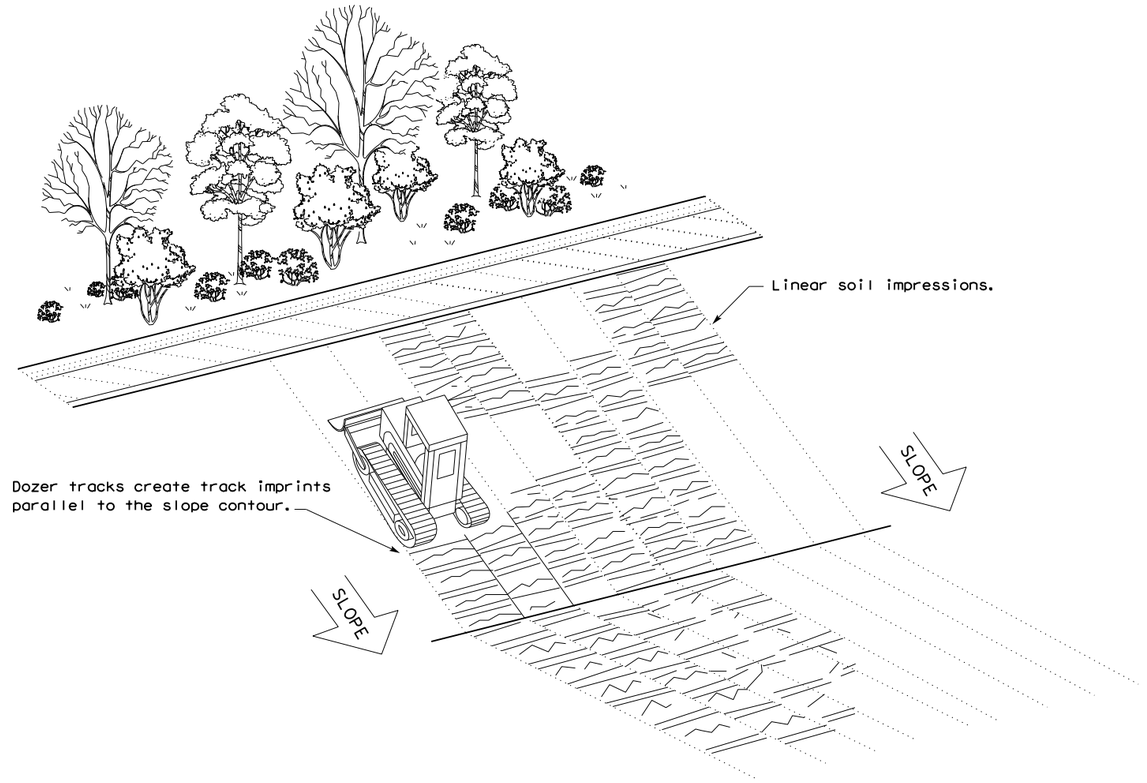

VERTICAL TRACKING

Texas Department of Transportation

Design Division Standard

TEMPORARY EROSION, SEDIMENT AND WATER POLLUTION CONTROL MEASURES

FENCE & VERTICAL TRACKING

EC(1)-16

FILE: ec116	DN: TxDOT	CK: KM	DW: VP	DN/CK: LS	
© TxDOT: JULY 2016	CONT	SECT	JOB	HIGHWAY	
REVISIONS	005	515	072	US 84	
	DIST	COUNTY		SHEET NO.	
	WAC	MCLENNAN		439	

DATE
FILE

DISCLAIMER:
The use of this standard is governed by the "Texas Engineering Practice Act". No warranty of any kind is made by TxDOT for any purpose whatsoever. TxDOT assumes no responsibility for the conversion of this standard to other formats or for incorrect results or damages resulting from its use.

DATE:
FILE:

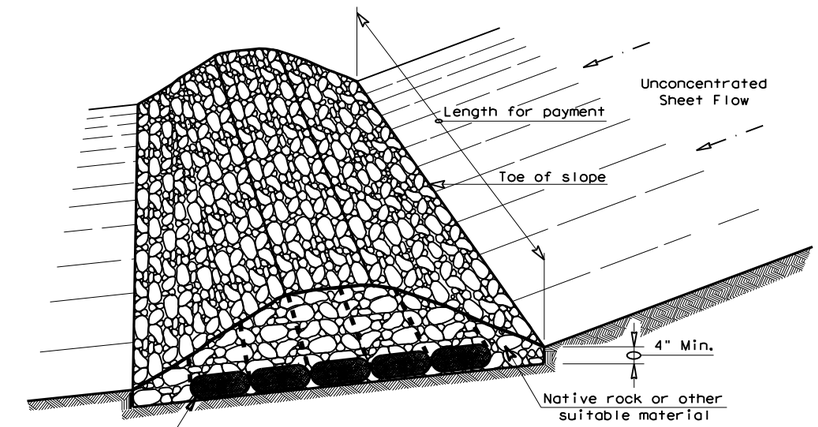

FILTER DAM AT TOE OF SLOPE

RFD1

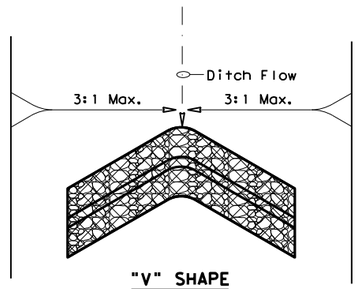

"V" SHAPE PLAN VIEW

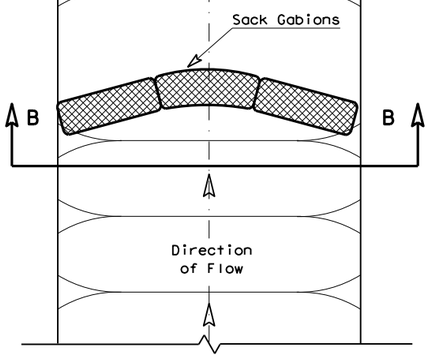

PLAN VIEW

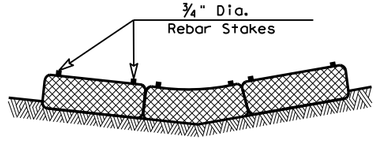

SECTION B-B

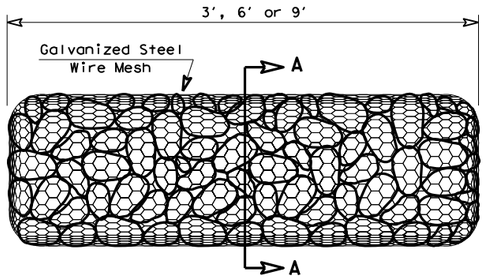

TYPE 4 (SACK GABIONS)

RFD4

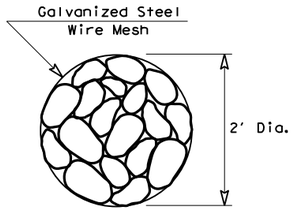

SECTION A-A

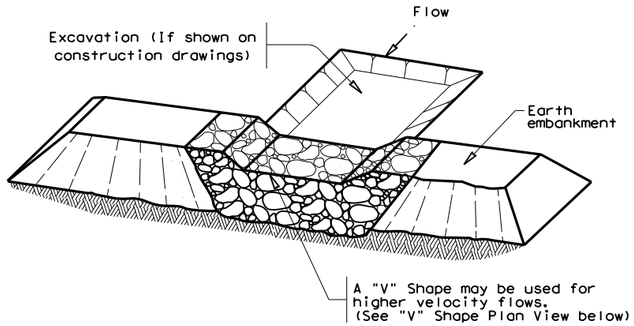

FILTER DAM AT SEDIMENT TRAP

RFD1 OR RFD2

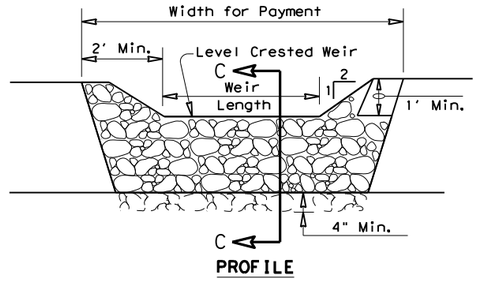

PROFILE

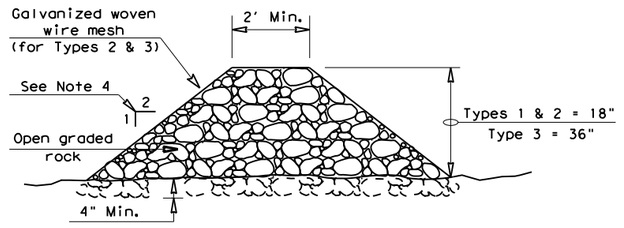

SECTION C-C

ROCK FILTER DAM USAGE GUIDELINES

Rock Filter Dams should be constructed downstream from disturbed areas to intercept sediment from overland runoff and/or concentrated flow. The dams should be sized to filter a maximum flow through rate of 60 GPM/FT^2 of cross sectional area. A 2 year storm frequency may be used to calculate the flow rate.

Type 1 (18" high with no wire mesh) (3" to 6" aggregate): Type 1 may be used at the toe of slopes, around inlets, in small ditches, and at dike or swale outlets. This type of dam is recommended to control erosion from a drainage area of 5 acres or less. Type 1 may not be used in concentrated high velocity flows (approximently 8 Ft/Sec or more) in which aggregate wash out may occur. Sandbags may be used at the embedded foundation (4" deep min.) for better filtering efficiency of low flows if called for on the plans or directed by the Engineer.

Type 2 (18" high with wire mesh) (3" to 6" aggregate): Type 2 may be used in ditches and at dike or swale outlets.

Type 3 (36" high with wire mesh) (4" to 8" aggregate): Type 3 may be used in stream flow and should be secured to the stream bed.

Type 4 (Sack gabions) (3" to 6" aggregate): Type 4 May be used in ditches and smaller channels to form an erosion control dam.

Type 5: Provide rock filter dams as shown on plans.

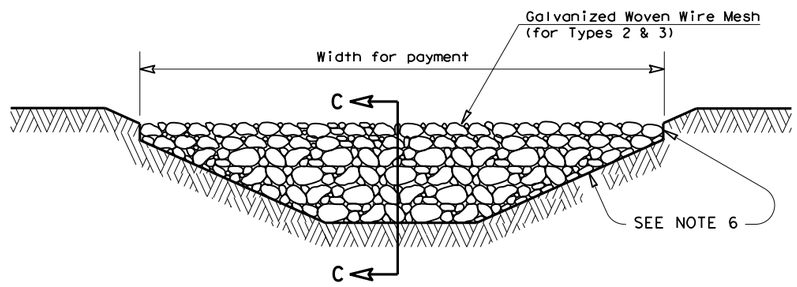

FILTER DAM AT CHANNEL SECTIONS

RFD1 OR RFD2 OR RFD3

GENERAL NOTES

1. If shown on the plans or directed by the Engineer, filter dams should be placed near the toe of slopes where erosion is anticipated, upstream and/or downstream at drainage structures, and in roadway ditches and channels to collect sediment.
2. Materials (aggregate, wire mesh, sandbags, etc.) shall be as indicated by the specification for "Rock Filter Dams for Erosion and Sedimentation Control".
3. The rock filter dam dimensions shall be as indicated on the SW3P plans.
4. Side slopes should be 2:1 or flatter. Dams within the safety zone shall have sideslopes of 6:1 or flatter.
5. Maintain a minimum of 1' between top of rock filter dam weir and top of embankment for filter dams at sediment traps.
6. Filter dams should be embedded a minimum of 4" into existing ground.
7. The sediment trap for ponding of sediment laden runoff shall be of the dimensions shown on the plans.
8. Rock filter dam types 2 & 3 shall be secured with 20 gauge galvanized woven wire mesh with 1" diameter hexagonal openings. The aggregate shall be placed on the mesh to the height & slopes specified. The mesh shall be folded at the upstream side over the aggregate and tightly secured to itself on the downstream side using wire ties or hog rings. For in stream use, the mesh should be secured or staked to the stream bed prior to aggregate placement.
9. Sack Gabions should be staked down with ¾" dia. rebar stakes, and have a double-twisted hexagonal weave with a nominal mesh opening of 2 ½" x 3 ¼"
10. Flow outlet should be onto a stabilized area (vegetation, rock, etc.).
11. The guidelines shown hereon are suggestions only and may be modified by the Engineer.

PLAN SHEET LEGEND

Type 1 Rock Filter Dam	RFD1
Type 2 Rock Filter Dam	RFD2
Type 3 Rock Filter Dam	RFD3
Type 4 Rock Filter Dam	RFD4

Texas Department of Transportation

Design Division Standard

TEMPORARY EROSION, SEDIMENT AND WATER POLLUTION CONTROL MEASURES

ROCK FILTER DAMS

EC(2)-16

FILE: ec216	DN: TxDOT	CK: KM	DW: VP	DN/CK: LS
© TxDOT: JULY 2016	CONT	SECT	JOB	HIGHWAY
REVISIONS	005515		072	US 84
	DIST	COUNTY		SHEET NO.
	WAC	MCLENNAN		440

DISCLAIMER:
The use of this standard is governed by the "Texas Engineering Practice Act". No warranty of any kind is made by TxDOT for any purpose whatsoever. TxDOT assumes no responsibility for the conversion of this standard to other formats or for incorrect results or damages resulting from its use.

DATE:
FILE:

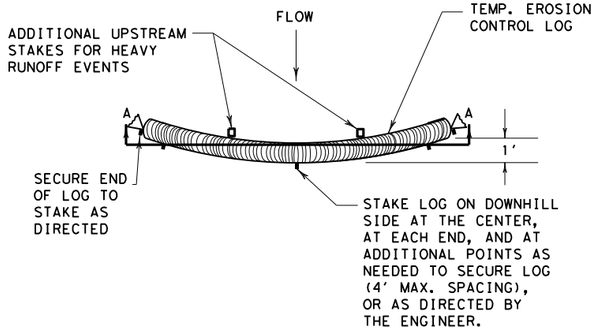

PLAN VIEW

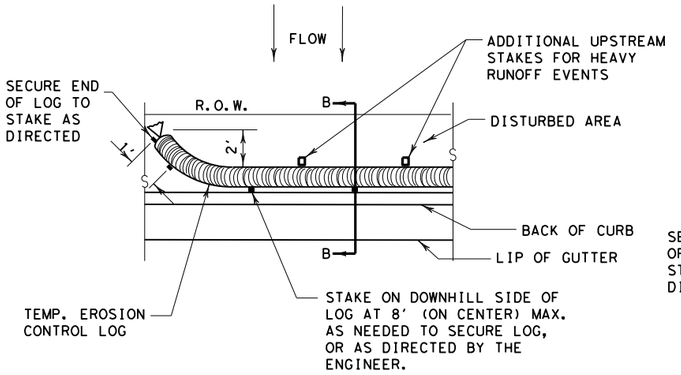

PLAN VIEW

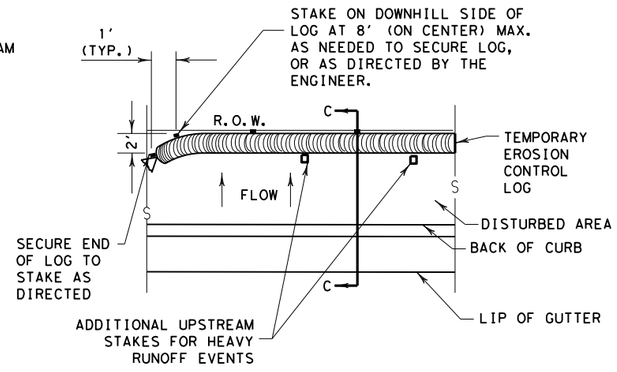

PLAN VIEW

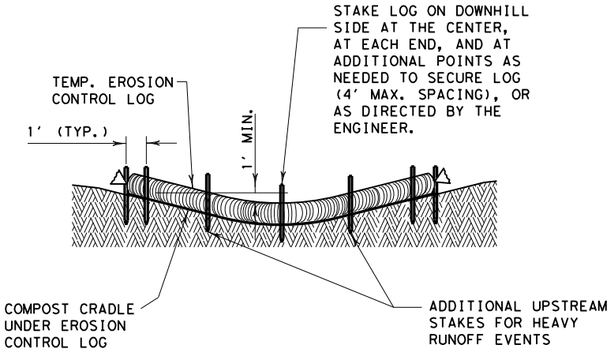

SECTION A-A

EROSION CONTROL LOG DAM

CL-D

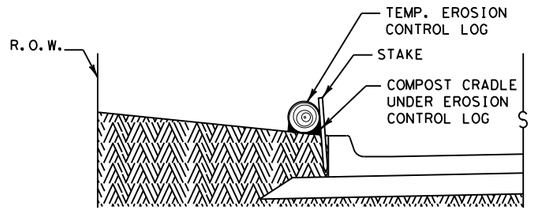

SECTION B-B

EROSION CONTROL LOG AT BACK OF CURB

CL-BOC

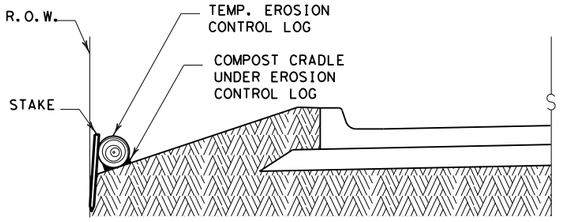

SECTION C-C

EROSION CONTROL LOG AT EDGE OF RIGHT-OF-WAY

CL-ROW

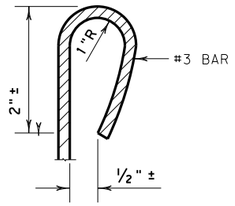

REBAR STAKE DETAIL

LEGEND

- CL-D — EROSION CONTROL LOG DAM
- CL-BOC — EROSION CONTROL LOG AT BACK OF CURB
- CL-ROW — EROSION CONTROL LOG AT EDGE OF RIGHT-OF-WAY
- CL-SST — EROSION CONTROL LOGS ON SLOPES STAKE AND TRENCHING ANCHORING
- CL-SSL — EROSION CONTROL LOGS ON SLOPES STAKE AND LASHING ANCHORING
- CL-DI — EROSION CONTROL LOG AT DROP INLET
- CL-CI — EROSION CONTROL LOG AT CURB INLET
- CL-GI — EROSION CONTROL LOG AT CURB & GRATE INLET

GENERAL NOTES:

1. EROSION CONTROL LOGS SHALL BE INSTALLED IN ACCORDANCE WITH MANFACTURER'S RECOMMENDATIONS, OR AS DIRECTED BY THE ENGINEER.
2. LENGTHS OF EROSION CONTROL LOGS SHALL BE IN ACCORDANCE WITH MANUFACTURER'S RECOMMENDATIONS AND AS REQUIRED FOR THE PURPOSE INTENDED.
3. UNLESS OTHERWISE DIRECTED, USE BIODEGRADABLE OR PHOTODEGRADABLE CONTAINMENT MESH ONLY WHERE LOG WILL REMAIN IN PLACE AS PART OF A VEGETATIVE SYSTEM. FOR TEMPORARY INSTALLATIONS, USE RECYCLABLE CONTAINMENT MESH.
4. FILL LOGS WITH SUFFICIENT FILTER MATERIAL TO ACHIEVE THE MINIMUM COMPACTED DIAMETER SPECIFIED IN THE PLANS WITHOUT EXCESSIVE DEFORMATION.
5. STAKES SHALL BE 2" X 2" WOOD OR #3 REBAR, 2'-4' LONG, EMBEDDED SUCH THAT 2" PROTRUDES ABOVE LOG, OR AS DIRECTED BY THE ENGINEER.
6. DO NOT PLACE STAKES THROUGH CONTAINMENT MESH.
7. COMPOST CRADLE MATERIAL IS INCIDENTAL & WILL NOT BE PAID FOR SEPARATELY.
8. SANDBAGS USED AS ANCHORS SHALL BE PLACED ON TOP OF LOGS & SHALL BE OF SUFFICIENT SIZE TO HOLD LOGS IN PLACE.
9. TURN THE ENDS OF EACH ROW OF LOGS UPSLOPE TO PREVENT RUNOFF FROM FLOWING AROUND THE LOG.
10. FOR HEAVY RUNOFF EVENTS, ADDITIONAL UPSTREAM STAKES MAY BE NECESSARY TO KEEP LOG FROM FOLDING IN ON ITSELF.

SEDIMENT BASIN & TRAP USAGE GUIDELINES

An erosion control log sediment trap may be used to filter sediment out of runoff draining from an unstabilized area.

Log Traps: The drainage area for a sediment trap should not exceed 5 acres. The trap capacity should be 1800 CF/Acre (0.5" over the drainage area).

Control logs should be placed in the following locations:

1. Within drainage ditches spaced as needed or min. 500' on center
2. Immediately preceding ditch inlets or drain inlets
3. Just before the drainage enters a water course
4. Just before the drainage leaves the right of way
5. Just before the drainage leaves the construction limits where drainage flows away from the project.

The logs should be cleaned when the sediment has accumulated to a depth of 1/2 the log diameter.

Cleaning and removal of accumulated sediment deposits is incidental and will not be paid for separately.

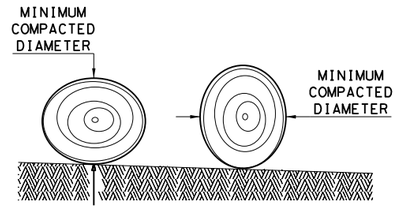

DIAMETER MEASUREMENTS OF EROSION CONTROL LOGS SPECIFIED IN PLANS

Texas Department of Transportation

Design Division Standard

TEMPORARY EROSION, SEDIMENT AND WATER POLLUTION CONTROL MEASURES

EROSION CONTROL LOG

EC(9)-16

FILE: ec916	DN: TxDOT		CK: KM		DW: LS/PT		CK: LS
© TxDOT: JULY 2016	CONT	SECT	JOB		HIGHWAY		
REVISIONS	005	515	072		US 84		
	DIST	COUNTY			SHEET NO.		
	WAC	MCLENNAN			441		

DISCLAIMER:
The use of this standard is governed by the "Texas Engineering Practice Act". No warranty of any kind is made by TxDOT for any purpose whatsoever. TxDOT assumes no responsibility for the conversion of this standard to other formats or for incorrect results or damages resulting from its use.

DATE:
FILE:

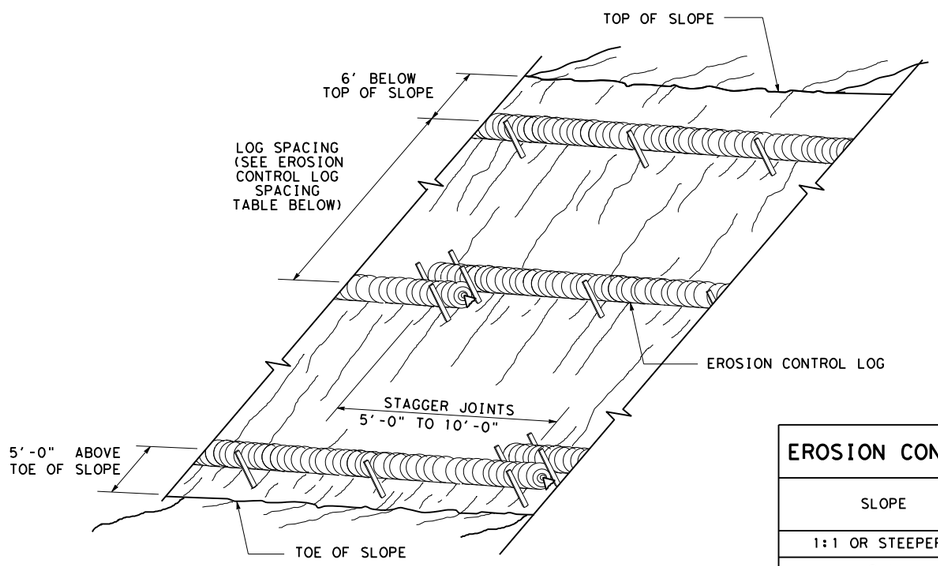

EROSION CONTROL LOGS ON SLOPES
STAKE AND TRENCHING ANCHORING

CL-SST

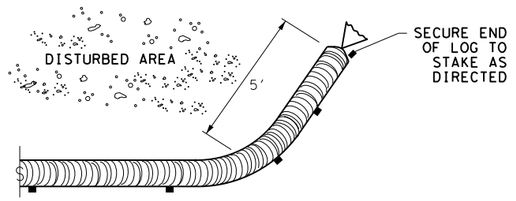

END SECTION RAP DETAIL

EROSION CONTROL LOG SPACING TABLE				
SLOPE	LOG DIAMETER			
	6"	8"	12"	18"
1:1 OR STEEPER	5'	10'	15'	20'
2:1	10'	20'	30'	40'
3:1	15'	30'	45'	60'
4:1 OR FLATTER	20'	40'	60'	80'

* ADJUSTMENTS CAN BE MADE FOR SOIL TYPE:
SOFT, LOAMY SOILS-ADJUST ROWS CLOSER TOGETHER;
HARD, ROCKY SOILS- ADJUST ROWS FARTHER APART

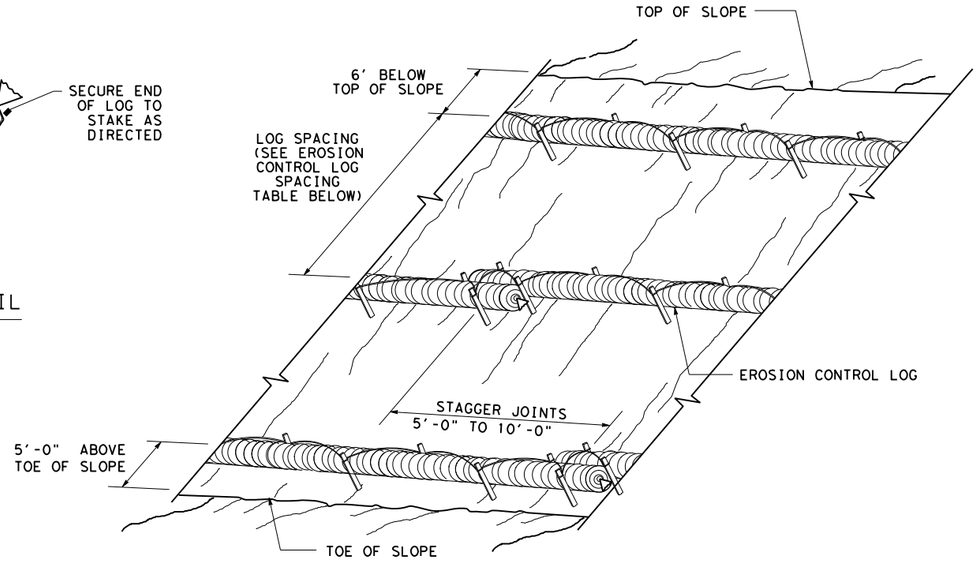

EROSION CONTROL LOGS ON SLOPES
STAKE AND LASHING ANCHORING

CL-SSL

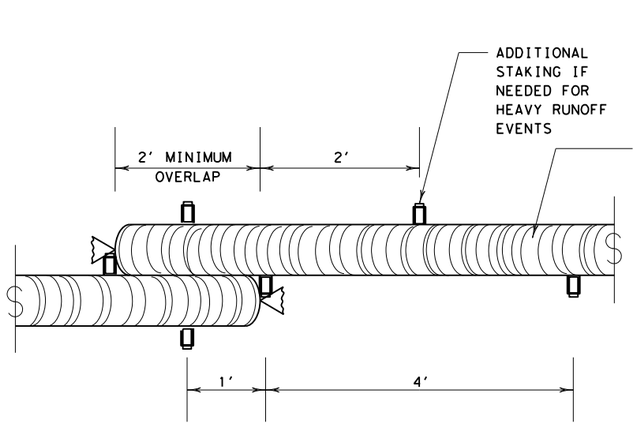

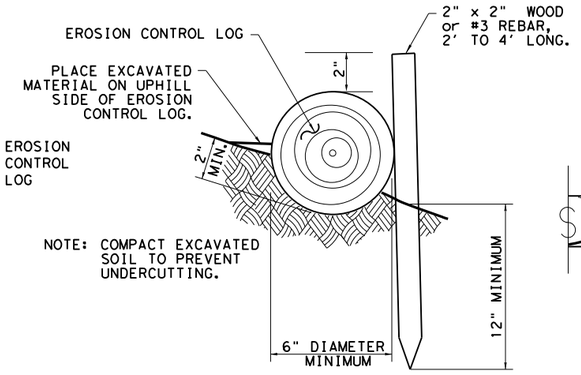

STAKE AND TRENCHING ANCHORING DETAIL

CL-SST

TRENCH DEPTH TABLE	
LOG DIAMETER	DEPTH
6"	2"
8"	3"
12"	4"
18"	5"

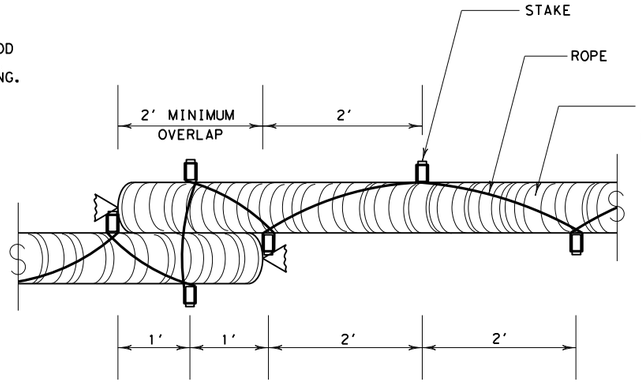

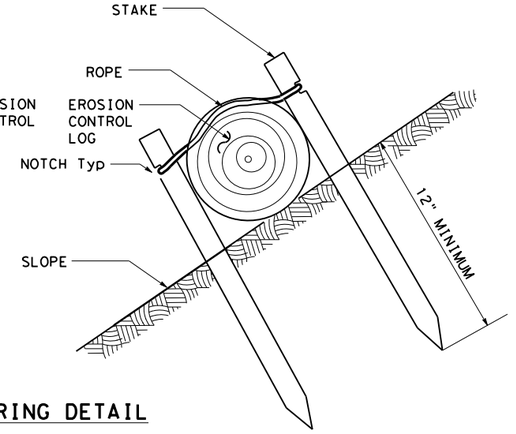

STAKE AND LASHING ANCHORING DETAIL

CL-SSL

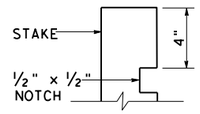

STAKE NOTCH DETAIL

SHEET 2 OF 3

Texas Department of Transportation

Design Division Standard

TEMPORARY EROSION, SEDIMENT AND WATER POLLUTION CONTROL MEASURES
EROSION CONTROL LOG
EC(9)-16

FILE: ec116	DN: TxDOT		CK: KM	DW: LS/PT		CK: LS
© TxDOT: JULY 2016	CONT	SECT	JOB		HIGHWAY	
REVISIONS	005	515	072		US 84	
	DIST	COUNTY			SHEET NO.	
	WAC	MCLENNAN			442	

DISCLAIMER:
The use of this standard is governed by the "Texas Engineering Practice Act". No warranty of any kind is made by TxDOT for any purpose whatsoever. TxDOT assumes no responsibility for the conversion of this standard to other formats or for incorrect results or damages resulting from its use.

DATE:
FILE:

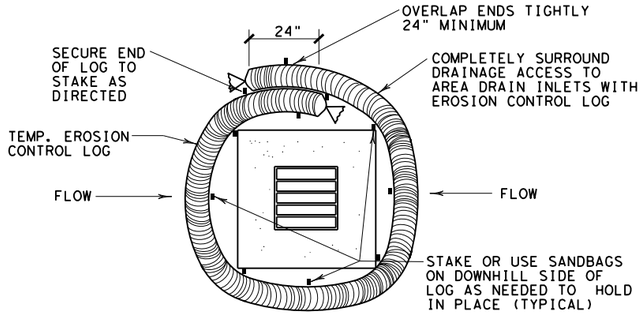

EROSION CONTROL LOG AT DROP INLET

CL-DI

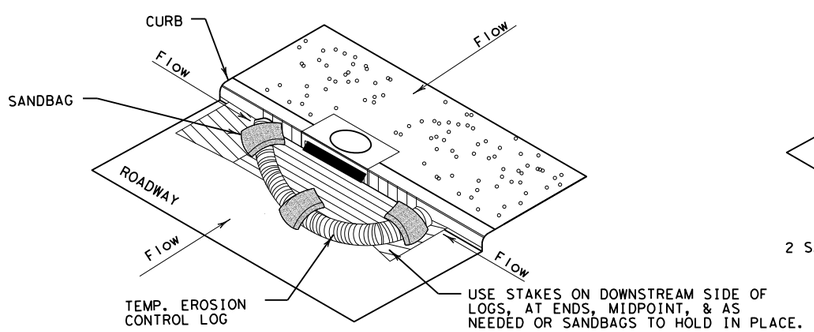

EROSION CONTROL LOG AT CURB INLET

CL-CI

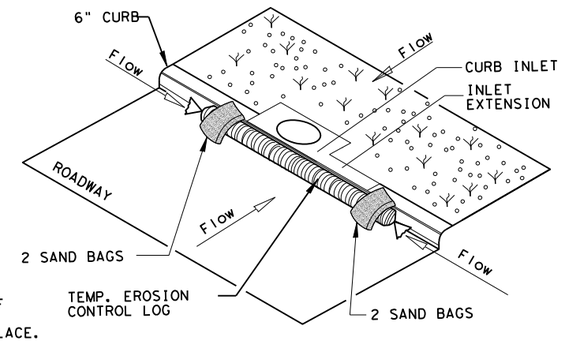

EROSION CONTROL LOG AT CURB INLET

CL-CI

NOTE:
EROSION CONTROL LOGS USED AT CURB INLETS SHOULD ONLY BE USED IF THEY WILL NOT IMPEDE TRAFFIC OR FLOOD THE ROADWAY OR WHEN THE STORM SEWER SYSTEM IS NOT FULLY FUNCTIONAL.

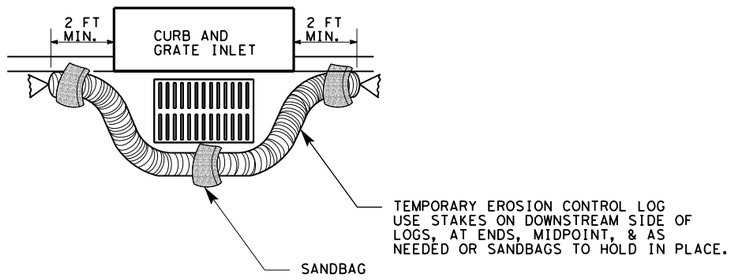

EROSION CONTROL LOG AT CURB & GRADE INLET

CL-GI

SECTION B-B

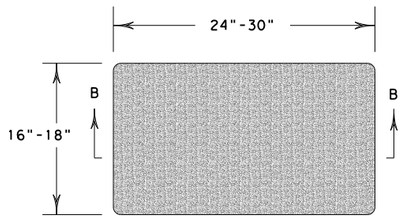

SANDBAG DETAIL

SHEET 3 OF 3

Texas Department of Transportation

Design Division Standard

TEMPORARY EROSION, SEDIMENT AND WATER POLLUTION CONTROL MEASURES

EROSION CONTROL LOG

EC(9)-16

FILE: ec916	DN: TxDOT	CK: KM	DW: LS/PT	CK: LS		
© TxDOT: JULY 2016	CONT	SECT	JOB		HIGHWAY	
REVISIONS	005515		072		US 84	
	DIST	COUNTY			SHEET NO.	
	WAC	MCLENNAN			443	